ARCHITECTURAL HISTORY HISTORIC PRESERVATION

JAMES L. GARVIN
FARRINGTON HOUSE
30 South Main Street Concord, New Hampshire, 03301
james@jamesgarvin.net http://www.james-garvin.com

ARCHITECTURAL ANALYSIS OF THE PLUMER-JONES HOUSE AND TAVERN

JANUARY 31, 2012

Summary: This report is based on an inspection of the Plumer-Jones Farm buildings, components of the New Hampshire Farm Museum, on January 18, 2012, and on examination of a series of detailed photographs taken to record details of the buildings and shared by Preservation Company.

The Plumer-Jones Farm buildings embody an evolution in carpentry and joinery extending from the late 1700s into the twentieth century. Particularly striking are the Federal-period details of the tavern building of 1804, a few of which were repeated in the Cape Cod house during a remodeling that presumably occurred when the smaller dwelling was moved and connected to the new tavern. The joinery of the tavern reveals the hand of an artisan who was aware of the character of the Federal style, and who was able to evoke that style with a limited range of tools, as explained below.

One purpose of this report is to define the original detailing of the Cape Cod house and the tavern as an aid to differentiating that original joinery from the later woodwork that appears in several areas of both houses. Some of that later work dates from the later Federal period, when a principal room in the Cape Cod house was transformed from a kitchen to a parlor, and when the original second-floor meeting room or ballroom of the tavern was subdivided through the addition of two adjacent small chambers within the bigger room.

Much of the later work in the tavern is seen in the rear portion of the first story of that building. This woodwork appears to date from circa 1850, a period when a long wing was added to the eastern side of the tavern and linked to a preexisting stable that is known to have been built in 1833 and relocated in 1849, creating the connected range of buildings we see today.

Some of the more confusing woodwork of a later period was installed in the twentieth century by family member and theater designer Robert Edmond Jones, in deliberate imitation of earlier work. Jones' restoration work is concentrated in the entry and western room of the Cape Cod house, which was enlarged when the preexisting central chimney was removed and the eastern

wall of the room was rebuilt in a different location, and in the rooms adjacent to the original chimney of the tavern.

This report also briefly describes the framing of the Cape Cod house, the tavern, and the ell, stable, and large barn as excellent examples of carpentry of their respective periods. Due to shortness of time spent in these buildings and to the quantity of Farm Museum collections stored in many areas, it was not possible to examine the frames of these buildings in detail or systematically, yet some general understanding was gained by a quick examination.

Cape Cod House. The Cape Cod house is reputed to date from between 1777 and 1785. The Plumer-Jones farm was conveyed by John Plumer to his son Joseph (1752-1821) before 1782. At about the same time, the elder Plumer conveyed an adjacent farm to the south to another son, Beard or Bard (1754-1817), who built another Cape Cod house. Both dwellings retain original details that match one another. Because it was common for young settlers on new lands to begin their occupancy in impermanent dwellings, often log houses, it is impossible to say whether the two Cape Cod houses were constructed before or soon after the conveyance of title to the farms, or still later. But the similarity of original detailing in the two houses seems to confirm that the same joiner was employed in each, thus suggesting that the two buildings were erected at about the same time.

The frame of the Plumer-Jones Cape is a typical domestic frame composed of four framing bents, two of them defining the end walls and two embracing the location of the original central chimney. The roof has a rafter-and-purlin frame that is typical of eastern New Hampshire, with six sets of rafters. Each rafter supports three purlins and has a hewn ridgepole at the apex of the roof.

The north (rear) room of the Plumer-Jones Cape Cod house has a wall of raised panels arranged in two vertical ranges and four-panel Georgian doors hung on HL hinges. The window shutters of the Plumer-Jones House are two-panel, full-height units with the same profile. The southwest room of the original Beard Plumer Cape Cod style house has paneling of a very similar nature, and four-panel doors of the same pattern.

Similarly, both houses share door and window casing profiles. These are basic eighteenth-century casings with a characteristic ogee backband:

Not to scale

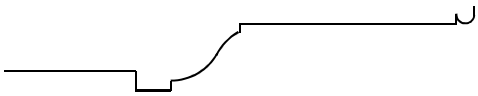

These casings are seen in the west room of the Cape and in the vertically sheathed bedchamber and paneled central room in the rear (north). The window casings measure 3⅜ inches in width; the door casings measure 4¼ inches in width.

The detailing in the Beard Plumer House to the south is slightly more elaborate than that of the Plumer-Jones House. The southern house, for example, includes a double ogee crown moulding

in its southwestern room; no such crown moulding survives in the Plumer-Jones House. Similarly, the Beard Plumer House has "double" casings in the southwest room, as seen below:

Not to scale

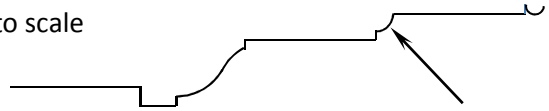

The added moulding indicated by the arrow is seen only in the best (southwest) room of the Beard Plumer House. Other casings are identical in both dwellings, as shown on page 2.

The chair rails in both houses are identical. The chair rail in the Plumer-Jones House is seen in Preservation Company photographs Farm_249 and 255:

Not to scale

The profile of the cap of the rail replicates that of a stairway handrail of the period.

Only a single original sash was seen in the Plumer-Jones House: in the west gable of the attic. This sash displays the characteristic muntin profile of an eighteenth-century window:

Not to scale

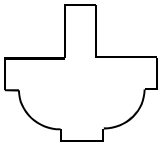

As described below, a new muntin profile was introduced when the tavern was built, reportedly in 1804. With the exception of the single attic sash shown above, all sashes in the Cape Cod house were changed to the new profile at that time. New fenestration includes the sidelights of the front door of the older house.

Tavern, general description. According to family tradition, the two-story tavern was built in 1804. At that time, the older Cape Cod house, originally standing elsewhere, was reportedly moved to become a wing of the larger tavern. Visual evidence in the southeastern room of the

Cape suggests that this room provided the main cooking fireplace of the Cape, and that this cooking function was retained when the Cape became an appendage to the larger building, possibly in conjunction with another cooking fireplace in the new structure.

The tavern frame is not a typical domestic house frame. Instead of having its four bents arranged to define a rather narrow central chimney bay, as seen in the Cape Cod house, the tavern has four framing bents that are placed to define an entry or stairhall bay on the west and a chimney bay of equal width on the east. Between these two rather narrow structural bays is a wider interval. As seen on the floor plans drawn by Preservation Company, the wide central bay defines a large central parlor at the front (south) of the first story and a meeting room of equal width, and greater depth, on the second story.

Frames of this type, lacking a defined and rather narrow central chimney or stairhall bay, are characteristic of commercial or shop buildings. Rarely encountered today, such frames were a recognized type in the eighteenth and early nineteenth centuries. It appears that such a frame was selected for the tavern in recognition that the Cape, moved and attached to the larger building as a dependency, would permit the tavern to dispense with a central chimney or stairhall and attain a more open plan. This plan provided a public entry on the western end, a chimney bay on the eastern end, and space between to be arranged as suited the needs of the tavern. On the first floor, the central bay provides a well-finished parlor in the front (south). Behind the parlor, the central framing bay became the principal portion of a dining or tap room that extended across much of the back of the building, originally being longer than it is today. On the second story, the central bay became a large meeting room entered from the stairhall on the west and flanked on the east by two small bedchambers. Because the finished staircase ascends to the unfinished attic, it may be theorized that the garret was intended to be employed as a sleeping area, or as some other public accommodation, when the building was crowded with travelers. Teamsters and drovers in the eighteenth and early nineteenth centuries, especially, were acclimated to outdoor life in all seasons and were content with rough lodgings, often unheated.

As is commonplace in Federal-period buildings, different rooms of the tavern were provided with joinery of varied patterns. This variation defined coherent areas of the building. The entry or stairhall, for example, displays detailing that is coherent on both the first and second floors and continues upward to the attic. The remainder of the first story of the tavern originally displayed details of a uniform pattern, as described below, although this uniformity has been diminished by alteration of the rear of the first story into the dining room that we see today. Similarly, the second story displayed joinery of slightly different patterns than are seen on the story below, yet are uniform throughout this floor except in the stairhall. All windows were originally fitted with sashes of the same muntin profile, as described below, but most of these sashes have been replaced with later patterns. As noted above, sashes of the same pattern were installed in the window openings of the Cape at the time of its attachment to the new tavern, and more of these sashes of circa 1804 now survive in that building than in the larger structure.

Tavern entry or stairhall. The stairhall of the tavern, which originally occupied the entire western bay of that building from front to rear, was finished with uniform joiner's work, executed with a limited range of tools that were employed to give a simple but attractive rendition of the Federal style. The back (northern end) of the original entry has been enlarged

through removal of a partition that originally extended to the rear wall of the building in line with the partition in the front stairhall.

A single set of moulding planes was used to fabricate the handrail of the staircase and the cap of the chair rail above the hallway wainscoting.

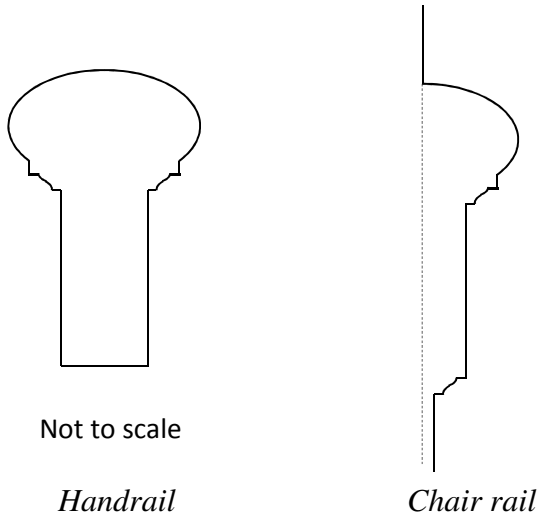

The casings of doors that lead from the stairhall to the first-floor parlor and to the second-floor meeting room are of a single, simple, but attractive pattern, measuring 4⅜ inches in width:

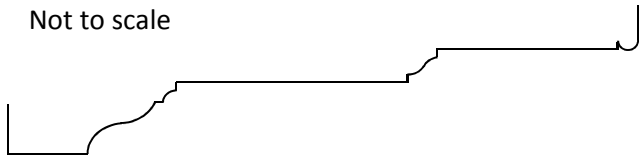

Casings of the same pattern appear in the larger dwelling that was added to the neighboring Beard Plumer Cape Cod house to the south at about the same time that the Plumer-Jones tavern was built.

In a similar vein, the spandrel panels beneath the main stairway stringers in both the Plumer-Jones tavern and the Beard Plumer house employ a grid of stiles and rails to support flat-faced panels. The similarity of the panel arrangements beneath the staircases of the two buildings again suggests the work of the same joiner in both entries:

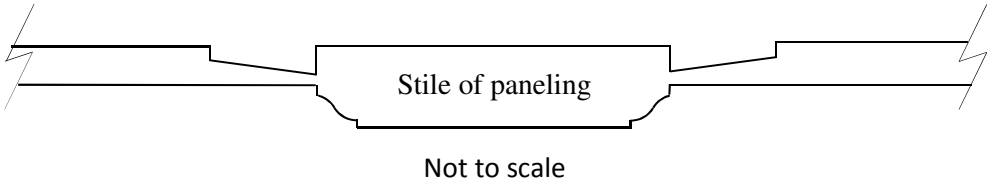

Face of Spandrel Wall Below Staircase

The employment of the same joiner at about the same time in both new buildings is seen again in the striking similarity of the stringer brackets on the staircases of the Beard Plumer house and the Jones tavern:

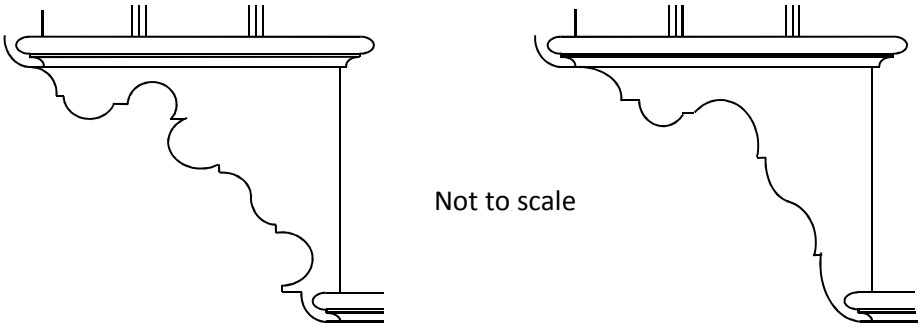

Above left: Beard Plumer House *Above right: Plumer-Jones Tavern*

Although these brackets are not identical, their imaginative use of complex segments of circles suggest the mind and hand of the same joiner. The bracket of the Beard Plumer house is more elaborate than that of the tavern, and this is in keeping with a generally more elaborate finish in the southern building as compared with that of the tavern.

Original details, first floor of tavern. The rooms on the first story of the Plumer-Jones tavern were apparently finished with the same details in both the front and rear of the building. Subsequent alterations in the rear of the building around 1850 to create the present dining room have obscured the coherence that once characterized all rooms on the first floor. The door and window casings on this floor, with the exception of those in the stairhall, had this profile, marked by an unusual backband moulding:

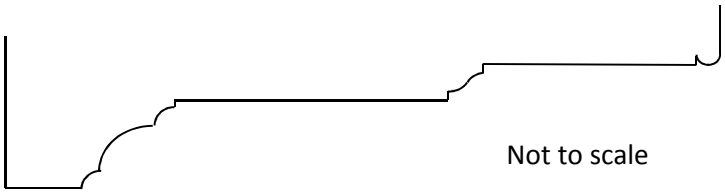

With the exception of the backband moulding, these first-floor casings are identical to those in the stairhall, or nearly so. Like the stairhall casings, these measure 4⅜ inches in width.

The same plane or planes that fashioned the unusual triple-coved backband was used again to create elements of both chair rails and baseboards in the front parlor and in the room behind, now the dining room. This moulding is circled in the drawings below.

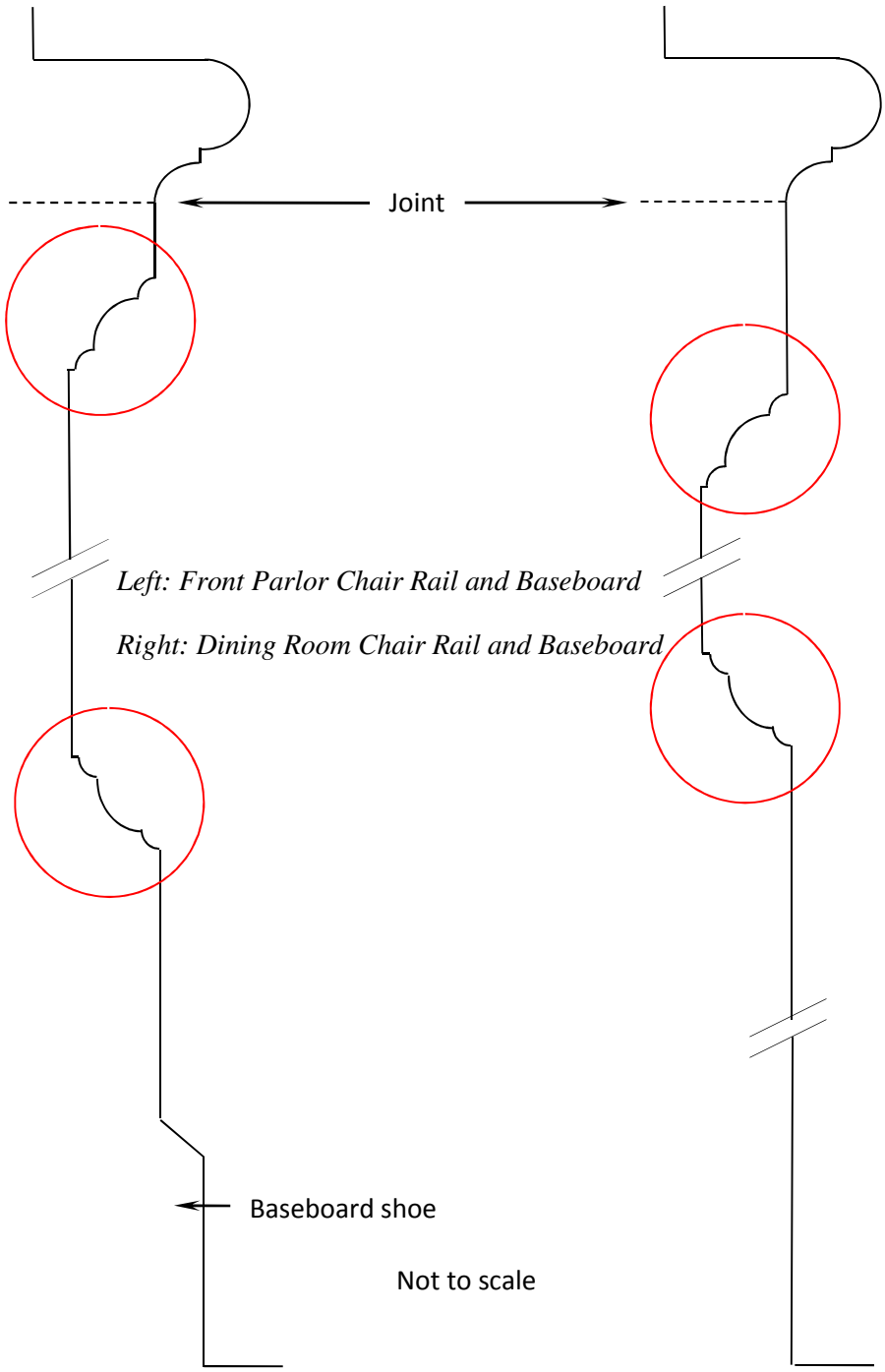

The chimneypiece now seen on the eastern wall of the front parlor is apparently partly original, but was moved north on the parlor wall when the chimney behind it was removed. The mantelshelf above the architrave appears to be a modern replica, as described on page 13, below.

The original doors that were used on the first story of the tavern mostly combine the six-panel arrangement that is standard on Federal-period doors with an old-fashioned stile and rail profile composed of a plain ovolo or quarter-round moulding. Panels are raised on one side and flat on the other. The flat side faces the stairhall and was apparently regarded as the principal side of the door. The doors are hung on HL hinges. Lack of paint beneath the loose leaves of some of these hinges reveals that they are original hardware, not added during later restoration work.

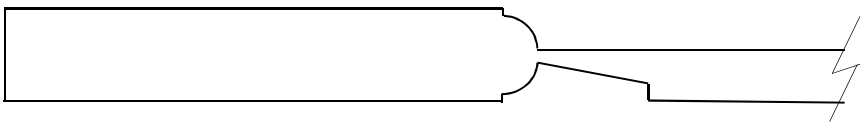

Not to scale

Original details, second floor of tavern. The second story of the tavern was originally composed of the large central meeting room or ballroom, with two small bedchambers placed north and south of a chimney that was located in the eastern bay of the structure. All three rooms probably had fireplaces, but the mantelpiece now seen in the northeast rear corner room is a reproduction with moulding profiles based on the original profiles used on this floor of the tavern and described below. The mantelpiece in the large room is also a reproduction, apparently inspired by the mantelpiece in the former kitchen of the Cape, described on pages 12-13 of this report.

The second-floor meeting room was finished with a somewhat higher order of joinery than any other room on the tavern. Unlike other chambers, this room had a coved wooden cornice that still defines the perimeter of the room, but is obscured by the addition of two dressing rooms and a closet at the north end of the original large room.

The door and window casings of the second story are “double” casings, with two levels to the architrave, similar to those used in the entry or stairhall and the rooms of the first floor. They are differentiated from these other casings by the use of a distinctive backband moulding. They measure 4½ inches in width.

Not to scale

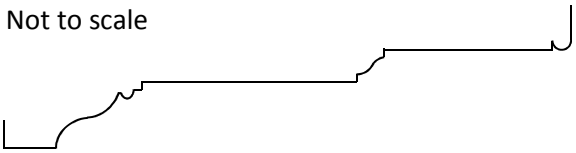

As elsewhere in the tavern, the backband moulding is also employed as an element of the chair rail in this room, giving a subtle coherence to all moulded features of the chamber, as seen below:

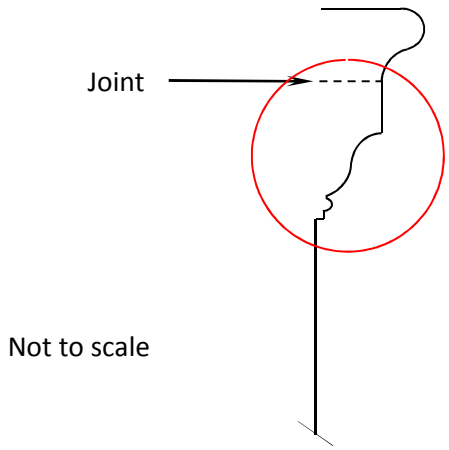

Chair rail in second floor meeting room

The doors that lead from the stairhall to the meeting room and from the meeting room to the adjacent chambers on the east are among the most expensive in the house. Like others in the tavern, these doors have six panels arranged in the manner of standard Federal style doors, with the small panels at the top. Unlike other doors in the building, however, these have flat panels on both sides of the door, providing a stylish face on either side and matching the visible face of the flat paneling seen beneath the tavern staircase. Such doors are more expensive than doors with a raised face on one side of the panel because both sides of the panel must be brought from a rough thickness of one inch to an even flatness through the use of the smoothing plane rather than being left thicker and merely beveled by a panel raising plane.

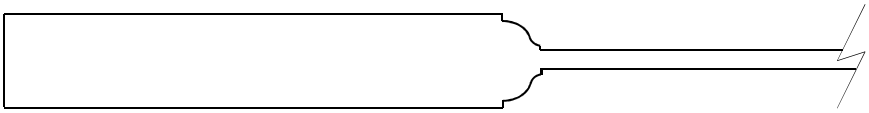

Doors serving the tavern meeting room and adjacent chambers

Original window sashes. The original sash muntin profile used on the Cape Cod house is shown on page 2. As noted, almost all sashes in the Cape were changed when the older building became an appendage to the new tavern in 1804. Both buildings were fitted with nine-over-six sashes having a recognizable Federal-style muntin profile. The profile employed in 1804 is typical of the standard Federal-period style in width and general appearance. It differs from standard muntins, however, in having almost an astragal moulding in place of the standard ovolo. The tavern profile is shown below, with a standard profile of the period for contrast. Few original sashes survive in the tavern, most having been replaced from time to time. Unaltered sash sets appear in the two rear (north) windows of the original second-floor meeting room (see Preservation Company Photo Farm_454). Others survive in the Cape Cod house.

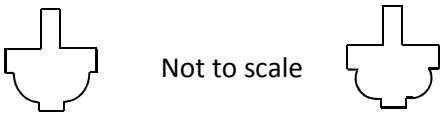

Left: Standard Federal-period muntin Right: Plumer-Jones Tavern muntin

Like other unusual features seen throughout the tavern, these unorthodox muntins suggest the employment of a country joiner who had a limited tool chest yet understood the spirit of the new Federal architectural style and achieved a good semblance of that style.

Apparently soon after the death of Levi Jones in 1847, his son Charles, still under guardianship, was permitted to carry out major changes to the farm buildings. As discussed below, these changes appear to have included the construction of the long wing connected to the eastern wide of the tavern, and the moving of a stable of 1833 to be attached to the eastern end of the wing, where it remains.

Where the original sashes of the wing of circa 1850 remain intact, mostly in the transom-type windows that light the attic of the wing near its floor level, the muntin profiles are characteristic Greek Revival profiles:

Muntins of the same profile are found in the sidelights of the main (southern) entrance to the tavern, which clearly was replaced or remodeled in the Greek Revival style at about the time the wing was added to the east. Probably all the other original sashes of the new wing were of the same pattern, but most if not all of the windows on the ground-level of the wing have been replaced during later adaptations.

Later Federal-Period Changes: There are two areas in the Plumer-Jones buildings that appear to represent alterations that were made some years after the tavern was built. The first of these is the insertion of two small rooms, apparently intended as dressing rooms, into the northern portion of the tavern's second-floor meeting- or ballroom. The second change, apparently occurring still later, is the conversion of the southeast room in the Plumer-Jones Cape Cod house from what was likely the principal kitchen of the complex into a well-appointed parlor. Although this room exhibits the most elaborate Federal-style woodwork of the Plumer-Jones property, the configuration of the mantelpiece opening (no longer an actual fireplace) suggests that the room continued to function as a kitchen at the same time that it assumed the architectural character of a parlor.

Added tavern dressing rooms. The two rooms that appear to have been added within the tavern's second-floor large room are now a single chamber, but evidence of a former partition

can be seen faintly in walls and ceilings. This room retains the original chair rail of the meeting room on its north side, beneath the windows, as seen on page 9 of this report; the original coved crown moulding of the meeting room likewise extends across the top of the north wall. The other walls of the chamber display reproduction chair rails that closely match the original yet can be distinguished from it by visible marks of machine planning on flat surfaces. These are described on page 15 of this report.

The room has two six-panel doors, with the raised panels facing the large room. The main difference between the detailing of these two doorways and other doors on the second story appears in the door casings, which have backband mouldings that differ from others seen in the complex:

Not to scale

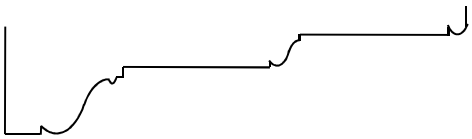

South-facing door casings, tavern dressing rooms

The door casings within the two doors are simpler in style, reflecting the older casings seen in the Cape Cod house:

Not to scale

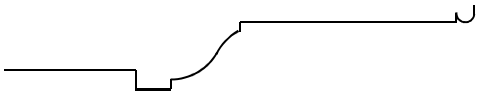

North-facing (secondary) door casings, tavern dressing rooms

Because these two rooms appear to have served as dressing rooms adjacent to a tavern ballroom, they were apparently added within the larger room, which originally was not subdivided, to serve a particular social function. Dressing rooms adjacent to tavern ballrooms were a common amenity.

Southeast room of the Cape Cod House. The transformation of the southeast room in the Cape Cod house, by contrast, appears to have been a change that would have been made after tavern functions diminished, or at least after intensive cooking for the traveling public had moderated, allowing a room that had served as a functional kitchen to assume the architectural character of a fine parlor.

The Cape Cod house is said to have been moved from its original site to become an adjunct to the tavern building when the latter was erected in 1804. The chimney of the smaller house would have been rebuilt at that time—it was a common practice to rebuild chimneys from time to time even in dwellings that were never moved—but was removed in the twentieth century. The fireplace opening in the southeast room, while later ornamented with a well detailed

mantelpiece of a late Federal design, was of large size and may be presumed to have been the main cooking fireplace for the adjacent rooms of the tavern building. It appears likely that the large cooking fireplace, and probably an adjacent oven, were retained when this room was finished as a parlor. A fashionable mantelpiece was added around the large fireplace. This element is uncharacteristic of a kitchen mantelpiece, but probably served to identify the room as a family parlor while still accommodating the large cooking fireplace within it.

The doors and door and window casings of the southeast room of the Cape Cod house differ somewhat from any seen elsewhere in the complex. They suggest both a later date than any joiner's work elsewhere, and a greater degree of refinement. They are hung on three-knuckle cast iron butts rather than on the HL hinges used for older doors in the complex.

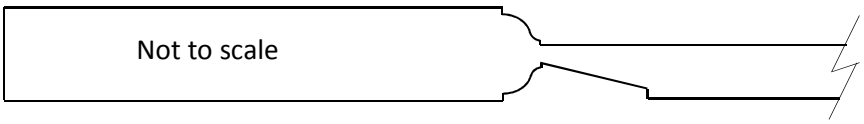

Door profile, Southeast Room of Cape Cod House

Except for the casings of the doors to the dressing rooms within the tavern ballroom, the door and window casings of this room offer the only examples in the Jones Farm buildings of the use of Grecian mouldings, which are based on conic sections. These profiles denote a more mature expression of the Federal style than do the more old-fashioned Roman mouldings used elsewhere.

Casing profile, Southeast Room of Cape Cod House

It should be noted that within these elaborated casings, the two-panel sliding window shutters of an earlier period were retained without change.

The late date of the joinery in the southeast room of the Cape Cod house is suggested most strongly by the mantelpiece. This feature combines turned Tuscan colonettes and especially heavy Grecian ovolo cornice mouldings that suggest a date as late as circa 1830, on the eve of the advent of the new Greek Revival style. These features are reminiscent of dated elements from the 1830 period, one example being the architectural supports for the pulpit in the Newbury Center [N. H.] Meeting House of 1832.

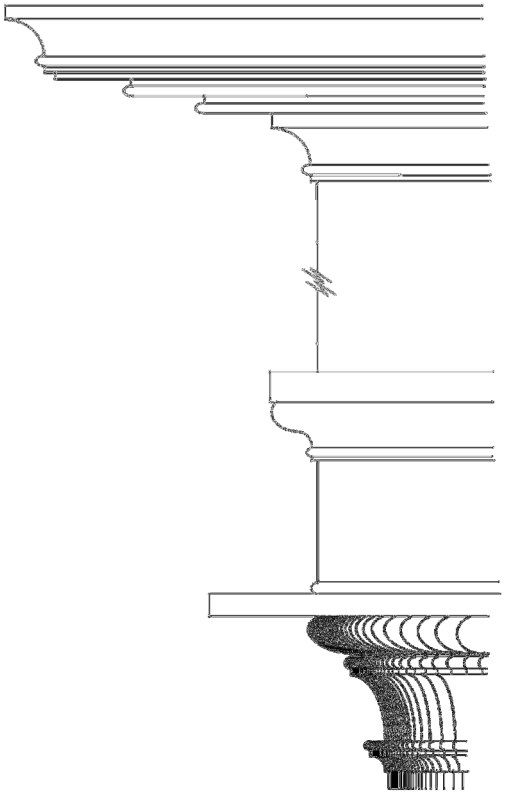

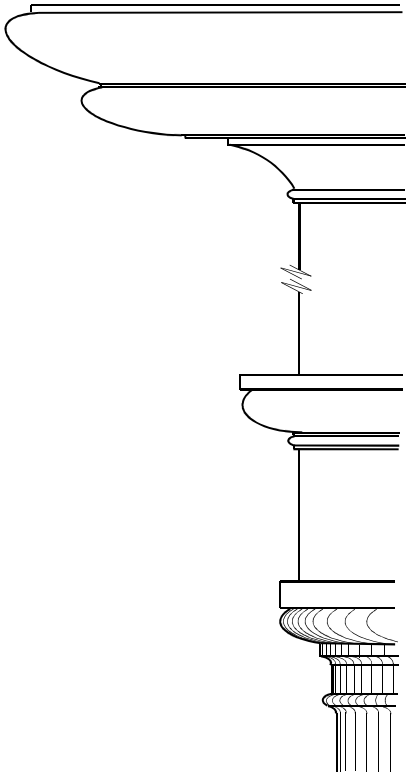

Left: Pulpit base, Newbury [N. H.] Meeting House Right: Chimneypiece, Plumer-Jones House
(Not to same scale)

Other evolutionary changes to the Jones Farm complex: The two dwelling units underwent continuing change from the mid-nineteenth century onward. Both the Cape Cod house and the tavern, for example, were provided with Greek Revival-style doorways, probably at about the same time that the Beard Plumer homestead to the south was similarly modernized.

These alterations, dating from around 1850, seem to be contemporaneous with the addition of the wing or shed that connects the tavern building and the stable near the road and contains the modern kitchen and summer kitchen for the complex. This long structure, with an all-sawn frame, retains window sashes having a muntin profile that is characteristic of the period around 1850:

Not to scale

The wing provides a third entrance in the Greek Revival style, similar to those of the Cape Cod house and the tavern, now sheltered under and somewhat obscured by a later porch. The

similarity of these features, combined with the technical attributes of the wing, suggest that the wing and the doorways were the products of a significant enlargement and remodeling that occurred shortly after the death of Levi Jones in 1847.

Restoration by Robert Edmond Jones. Some of the architectural changes by family member and theater designer Robert Edmond Jones (1887-1954) have already been mentioned. Possibly not all the "colonial revival" detailing seen in the house can be attributed to Robert Edmond Jones, but tradition ascribes most twentieth changes to him, and places most of those changes between 1945 and 1950. Areas where new woodwork has been identified are listed below. In all cases, this new detailing was carefully executed and was closely based on early details found elsewhere in the house. Jones apparently employed a skilled craftsman to make these changes.

- Painting of margins of panels. See Preservation Company photograph Farm_280. The beveled margins of the raised panels and vertical wall sheathing in the rear room of the Cape have been picked out in a gray color that contracts with the off-white paint used on the stiles, rails, and faces or fields of the panels. While painting in this style was occasionally done in the eighteenth century, it is seldom seen in rooms that have been repainted from time to time. It is likely that this decorative treatment was the work of Robert Edmond Jones. The rear room of the Cape was described as a "studio" in the 1941 probate inventory of Fred Jones, Robert Edmond Jones' father.

- Inside front door of Cape. See Preservation Company photograph Farm_258. The wall that faces the front entrance door of the Cape Cod house is decorated with raised wooden panels that apparently match the profile of those seen in the rear room of the house, mentioned above. Examination of these panels reveals that they are re-used elements from elsewhere, carefully pieced out with new wood to create a balanced composition. Some of them could be reused doors; others could be window shutters or cupboard doors. This wall was apparently created when the central chimney of the Cape was removed. A stairway leading to the attic could previously have been located here. The current attic stairs are located behind (to the north of) the new chimney that replaced the fireplace chimney. A brief inspection in the attic disclosed no other original location for the attic staircase than the area of this new paneling, but did not confirm the former presence of a staircase just inside the front door. This question deserves further investigation.

- West room of Cape. See Preservation Company photograph Farm_233. This room was enlarged when the central chimney was dismantled. Enlargement was accomplished by removing the fireplace wall (which could have contributed some of the paneling inside the front door, described above) and building a new wall farther to the east. The position of the original wall was defined by the chimney posts in the frame and its alignment is easily traced in the ceiling plaster. The new wall is constructed of studs, gypsum board, and paneled wainscoting, and utilizes two old raised-panel doors to provide access to the attic stairs and a storage closet.

- Sealing of door at foot of tavern staircase. See Preservation Company photograph Farm_306. A door that once opened from the front entry of the tavern into the southeast

room of the Cape Cod house, at the foot of the tavern stairs, has been carefully sealed up with new detailing added to hide its former presence.

- Mantelshelf in the front parlor of the tavern. See Preservation Company photograph Farm_372. The architrave that surrounds the closed fireplace opening matches the casings elsewhere in the parlor; see profiles on pages 6-7 of this report. This element of the mantelpiece appears to be old, and was probably moved somewhat to the north when the tavern's fireplace chimney was dismantled and replaced by the current chimney. The frieze board above the architrave and the mantelshelf, made up principally of two ogee mouldings, appear to be modern additions to the older casing below.

- Library or "Rachel's Room." See Preservation Company photograph Farm_384. The fireplace wall in this room was moved north when the tavern chimney was replaced, enlarging the room. The small reconstructed fireplace in the room was provided with a new mantelpiece. The architrave around the fireplace opening is a fairly accurate reproduction of the architrave or casing used in the meeting room on the second floor, illustrated on page 8 of this report. Robert Edmond Jones apparently selected this casing for reproduction, using it (or its backband) for new details in the combined dressing rooms at the north end of the tavern's second-floor meeting room and for a new mantelpiece in the northeast bedchamber of the tavern (see below). The frieze and mantelshelf of the mantelpiece in the library reveal the marks of machine production.

- Back stairway of tavern. See Preservation Company photograph Farm_474. The materials from which this staircase is constructed are circular-sawn.

- Mantelpiece in tavern meeting room. See Preservation Company photograph Farm_452. This entirely new mantelpiece appears to have been inspired by the late Federal period mantelpiece in the southeast room of the Cape Cod house, partially shown in the drawing on page 13 of this report.

- Chair rail in dressing rooms. The chair rails on the sides of this room (originally two rooms) were added to give coherence to the chamber when it was converted to a single room. These chair rails are a fairly close reproduction of the original chair rail shown in the drawing on page 9 of this report. The new chair rail utilizes a reproduced backband moulding that Jones used in the library or "Rachel's Room" and in the northeast chamber of the tavern (see below). This moulding is circled in red in the drawing on page 9 of this report.

- Mantelpiece and doorway to ell in northeast chamber of tavern. See Preservation Company photograph Farm_488. The mantelpiece in this room uses the casing or architrave that Jones employed in the library or ""Rachel's Room" on the first floor. Since this casing was copied from the characteristic casing of the second floor of the tavern, the mantelpiece superficially appears to be an original feature of the room.

The doorway leading from the northeast chamber into the attic of the wing was salvaged from elsewhere and placed in this location for unknown reasons. See Preservation Company photograph Farm_492. The door casings match the original casings of the second floor of the tavern, shown on page 8 of this report.

Stable. The building closest to the highway appears to be the structure described as a new "stable" in Levi Jones' daybook in 1833. The frame of this building is hewn and is laid out by the "scribe rule" method, where each joint is unique and where the intersecting components are marked with scribed numerals to indicate their relationships. A hewn frame is generally to be expected as late as 1833, even in a household, like Levi Jones', that included a productive sawmill. By 1833, a new method of framing, the "square rule," had been widely introduced in New Hampshire, although many barn frames continued to be laid out by the older method.

On January 27, 2012, Kathleen Shea discovered the following receipt in a yellow notebook in the archives of the New Hampshire Farm Museum:

Received of David Wallingford
Guardian of Charles Jones
Thirty five Dollars in full for moving
Stable
Milton July 17th 1849

Thos W. Mordough

It seems likely that the stable building was built in some convenient location not far from its present site. Probably it was originally sited with respect to an "old barn" that stood on the property at the time of Levi Jones' death in 1847. The stable was apparently moved in 1849 to place it at the end of the long wing that was to be constructed from the eastern elevation of the tavern at about that time (see description of the wing, below). This arrangement persists today.

The stable has an unusually heavy and well-built frame. It retains many of the characteristics of an eighteenth-century barn, including the use of the traditional complex English framing joint at the top of the posts:

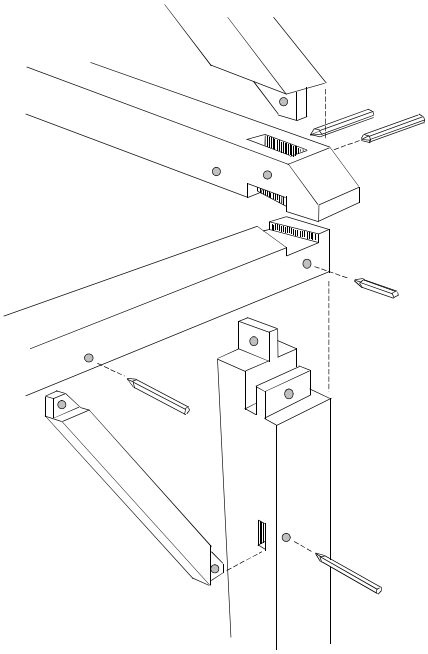

Despite its general similarities to a traditional English barn, the stable exhibits some adaptations that identify its special nature. Its wall posts are unusually high, providing more headroom on the ground floor than is usual in a barn. Its loft is more fully framed and floored than is common in a barn having the usual central driveway. The framing of the loft shows that the building formerly had trap doors or chutes for throwing hay down to the ground floor, attributes not normally seen in a barn. Lines of mortises in the soffits of some of the joists of the loft show that the ground floor was originally provided with partitions whose exact layout and purpose remain to be defined. The stable is also sheathed horizontally, a feature seldom encountered in an ordinary barn, and its wall sheathing boards are carefully jointed and tongued-and-grooved to provide windproof walls. Examination of the portion of the western wall of the stable that is intersected by the attic of the adjoining wing reveals that the exterior of the sheathing was exposed to the weather between the time that the stable was built and the time that it was connected to the wing—presumably the years between 1833 and 1849. Visual evidence on this wall shows that the building originally had a crown moulding beneath its eaves; the boards in the zone of this moulding are unaffected by the slight weathering that characterizes the sheathing below.

The feature that most strongly identifies the building as a stable is seen in the loft. Study of the roof framing discloses that the two tie beams that extend across the building at the feet of the two inner sets of rafters were utilized to support the loft floor, obviating the need for the heavy interior posts that characterize an English barn. Each tie beam is provided with two vertical wooden tension members that are tenoned into the ties and the loft floor beams below the ties. By this means, the loft floor was supported from above, leaving the ground floor unencumbered by posts (posts have subsequently been added here). Slanted struts between the tie beams and the rafters above them further lock the roof system into a rudimentary truss that supports the loft floor; these struts appear to be original and to be marked with framing numerals. Additional slanted planks were later nailed to the sides of the tie beams to strengthen the system.

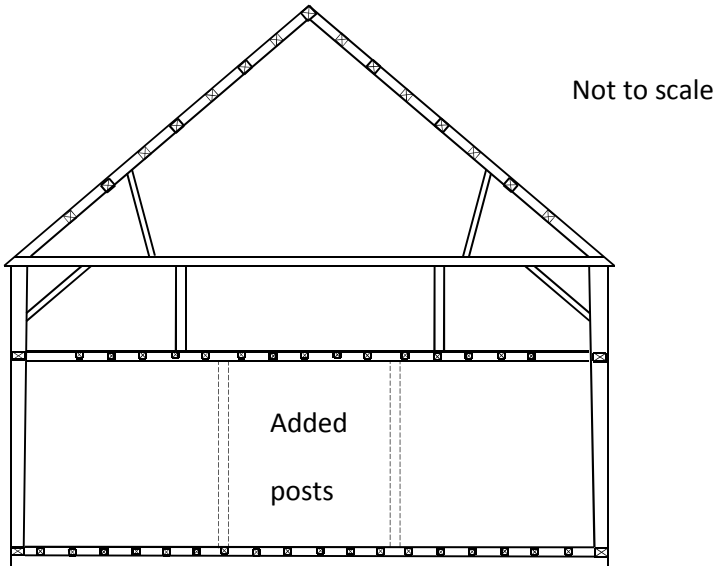

One of the characteristic features of stable buildings of the mid-to-late nineteenth century is the support of loft floors from above. Support from above leaves the ground story of a stable building unencumbered for movement of animals and vehicles. Extrapolating backward through

time, it seems clear that this feature was also seen in earlier stables like the Jones building. By the mid-1800s and later, the usual method of supporting stable loft floors was through the placement of supplementary wooden trusses in the roof framing, usually queenpost trusses, with iron tension rods extending down from the trusses to the loft floor framing below.

The use of wooden tension members instead of iron rods in the Jones stable created structural problems. The weight of stored hay on the loft floor overstressed the wedges and pins that locked the tenons into the mortises in the tie beams. Several of the tenons are partially withdrawn; the nailing of supplementary planks across the sides of these members was clearly an attempt to prevent further failure. Another deficiency of the frame of the Jones stable is its dependence on the roof system alone to support the hayloft floor below. The rafters and tie beams, connected by wooden struts, were unequal to the added stresses placed upon them. In a later stable, independent trusses would have been provided within the roof framing to support the loft floor in a manner comparable to the supplementary trusses seen in the roof system of the Jones barn, described below.

Despite its robustness and expert carpentry, the frame of the Jones stable suffered from additional problems. It appears that the hayloft floors, inadequately supported from above, progressively sagged over time. Flexure of the heavy floor beams pulled their end tenons from the wall posts, which apparently remained plumb due to their substantial dimensions and the bracing effect of floor and tie beams at their feet and tops. Sagging of the loft floor opened a number of joints between floor beams and posts, which were later restrained by steel gussets.

Despite these structural issues, the Jones stable remains an important document of building framing in New Hampshire, capable of shedding light on other stable buildings of the first half of the nineteenth century. It deserves further study and documentation as one of the most important holdings of the New Hampshire Farm Museum.

Woodshed wing. This wing was not examined closely, yet both its carpentry and its detailing denote a construction date of circa 1850. It seems clear that the receipt of 1849, copied above on page 16, documents part of the planning for construction of the wing. If the stable originally stood within the footprint of the wing, then the stable would have had to be moved before the wing could be built; if the stable stood elsewhere, it may have been moved in the summer of 1849 to connect it to the end of an already constructed wing.

The wing has a sawn frame except for the purlins in the roof, which are fashioned from spruce poles. The frame is composed of heavy wall posts placed at intervals, connected at the level of the attic floor by substantial girts, and capped by large wall plates of rectangular cross-section. These plates are oriented with their longer axis placed horizontally to aid the plates in resisting the outward thrust of the feet of the rafters. The rafters are sawn, and their feet appear to be spiked to the tops of the wall plates rather than tenoned into the plates. There are no diagonal braces in the frame of the wing, although one lateral partition is braced in X fashion to stiffen the building against racking.

Where the girts at the attic floor level intersect the wall posts, the girts are tenoned into the sides of the posts and pinned. Lateral attic floor beams are likewise pinned to the posts. But the heavy

intermediate floor beams merely rest on top of the girts, much as floor joists rest on ribbons in a balloon frame. As in a balloon frame, lighter studs are nailed alongside these intermediate floor beams.

The resemblance of this frame to a balloon frame, albeit on a massive and robust scale, is one of several clues that the wing dates from circa 1850. This was a period when the principles of the balloon frame were beginning to be adopted in conservative New England, where more traditional timber framing, with mortise and tenon joints and wall braces, had dominated since the seventeenth century. It is not uncommon the find that wooden structures built in the mid-1800s combine a few heavy posts, girts, and beams, but intersperse these more traditional heavy members with light intermediate studs. In similar fashion, the frame of the Jones wing displays heavy bents placed at intervals, but utilizes lighter members, or members not secured by mortise and tenon joints, between the principal framing units.

The saw marks seen on the frame of the Jones wing reveal an unusually strong "feed" or log advancement of nearly half an inch between strokes of the sawmill. These diagnostic marks seem to be seen on all original components of the wing: posts, beams, and boards alike. It seems likely that the entire fabric of the wing was sawn in one of the mills in which the Jones family had an interest. Further documentary research may reveal the location of this mill.

Apart from the technological clues that the wing dates from circa 1850, the structure displays strong stylistic attributes of this period. The characteristic muntin profiles of the sashes that light the attic at the floor level have been described on pages 10 and 13 of this report.

Additional features that bespeak the late Greek Revival style of circa 1850 include the pitched tops of the exterior window casings on the lower story of the wing. Probably intended to suggest the pediments of Greek temples, such pitched features are also seen as backboards on mantelpieces of the 1850 period, and often as interior door and window casings as well. Since matching features are seen on the Jones stable, it may be supposed that the stable, originally built with exposed tongue-and-grooved sheathing, was clapboarded and fitted with Greek Revival exterior casings at the time that the wing was built and the stable attached to the wing.

Barn. It is known that the large barn was first constructed in 1846, at the very end of Levi Jones' life. The barn originally stood in another location, though probably not too distant from its current site. It was moved to its current site in late 1865 and enlarged by the addition of two bays on the eastern end soon thereafter. The journal of Charles Jones for 1865, as transcribed by Kathleen Shea, includes the following entries:

> Saturday Aug. 12, 1865 " Mr. Horn of Grt. Falls looked at Barn offered to move it and level it on the spot where I want it and leave it in as good condition as it now is for $200...
>
> Aug. 23, 1865 " Staked out Barn Cellar – Paid Mr. Horn for moving Dore's building 6.50-
>
> Aug. 24, 1865 "Commenced digging Barn Cellar-
>
> Aug. 26 1865 "Whitehouse - Palmer worked on Cellar Sold Palmer 15 lbs. of Pesh (? Peas, Pine?)

Aug. 28, 1865 "Worked in cellar with five men had out at night about 80 loads of dirt-

Aug. 29, 1865 " Worked on Cellar with three men…

Sept.12, 1865 "Hauled Rocks for cellar wall- Palmer worked with me -

Sept. 23, 1865 "Worked on wharfing for Barn with three men four oxen- Ga. R Horn worked in afternoon- EJ Dore & Whitehouse worked

Sept. 26, 1865 …"Palmer & Horn worked on Cellar filling in wharfing-

Sept. 27, 1865 "Worked on wharfing with three men-

Oct. 2 1865 "Got Mare shod Worked in Cellar with three men- Granger & Whitehouse worked-

Oct. 10, 1865 " Finished work on cellar wall for this Fall- E. Dore & Palmer laid stone-

Oct. 14, 1865 "Had underpinning split- C. J. Dore, Whitehouse & Palmer worked- …Paid C.J Dore $22.50 for 9 ½ days on Barn Cellar.

Oct. 23, 1865 "…Worked on Barn Cellar with 4 men & 4 oxen

Oct. 24,1865 Worked in cellar with 3 Men pair of oxen-…

Oct. 25, 1865 …Dug drain to Cellar-…

Oct. 27, 1865 Hauled flat rocks to cover drain in afternoon-

Oct. 30, 1865 Ploughed in forenoon- Went to Brookfield in afternoon- Bought 240 Clapboards of LG Cate for J N Palmer paid 7.20…Covered drain in afternoon- Pleasant day-

November 2, 1865 " …Made schedule of timber for Barn"

Nov. 6, 1865 Worked in woods cutting up logs- Sanborn, Palmer, Whitehouse, Gerrish and Gilman worked- Cut out most of Barn frame-

Nov. 17, 1865 Palmer picked rocks back of Stable- Nute and Drew stayed with drove-had 107 cattle-

Nov. 25, 1865 Whitehouse & Palmer built wall-

Dec. 11, 1865 …Commenced hauling pine timber for Barn 4 Loads-

Dec. 23, 1865 Loaded 344 ft of Spruce timber for E. Locke- Hauled load of Shingle stuff to Union- load of Boards home-

Dec. 26, 1865 Finished hauling pine lumber cut for barn- Hauled out four loads of Hemlock timber-

It seems likely that Charles Jones' references to "wharfing" describe the placement of timber cribbing for the moving of the barn to the newly excavated cellar, although this usage of the term is not a standard one. If that is the case, it appears that the barn was actually moved in October, 1865, and that the frame and sheathing of the added two bays was brought to the site in December.

The structural system of the Jones barn is unusual. Like the earlier stable, the barn uses upper framing to support a lower floor, avoiding the placement of posts below that floor. While the stable frame used the rafter and tie beams of its roof system to support the hayloft floor, the barn frame utilizes separate trusses placed within the roof system to support both the southern hayloft and the southern zone of the ground floor. This system does away with posts in the southern half of the barn cellar, providing an unencumbered area for manure storage and removal. This suspension system places the inner posts in each framing bent of the barn in tension, hanging them from the trusses as kingposts as seen in the diagram below:

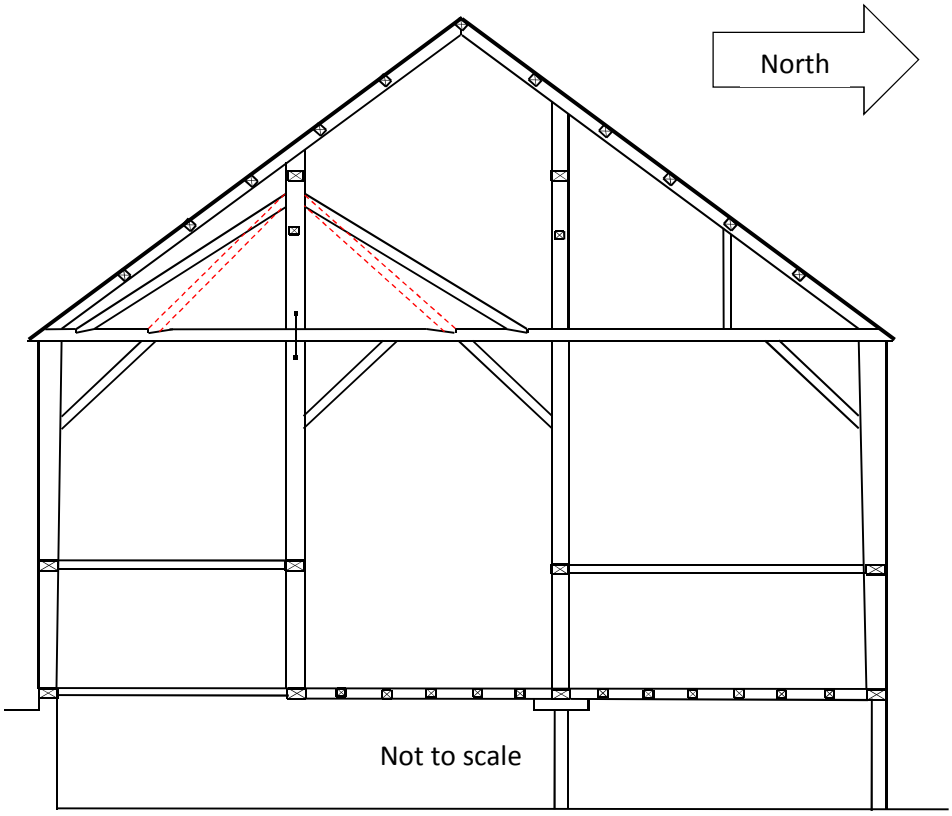

One major question regarding the barn is whether its unusual structural system is original or an addition of 1865, when the barn was moved and placed above a newly excavated cellar. As seen today, the truss system takes advantage of the higher grade to the south, supporting the southern wall of the structure on a stone foundation constructed of massive fieldstones and gaining an unobstructed cellar below the suspended kingposts.

As shown by the dashed red lines in the cross-section of the barn, there is evidence of an abandoned truss system of a similar nature in the tie beams of the barn. If the now-empty

notches in the tie beams were used as suggested, the barn had a similar truss system before it was moved and lengthened. The older system, presumably dating from 1846, placed the feet of the chords of the truss, shown in red, inboard of the location of the current chords. This design could have placed excessive bending stresses on the tie beams, and excessive compression in the diagonal braces beneath the feet of the chords. Possibly structural problems were evident at the time the barn was moved, causing the redesign of the trusses with new, longer chords delivering their thrust closer to the posts of the frame, thus reducing bending stresses on the tie beams. If this is so, the barn must have been treated as a bank barn, with a partially open cellar, in its original location as well as in its new location of 1865. Possibly archaeological examination of the nearby topography could identify the previous site of the barn.

Further definition of this theory will probably be possible through a more careful examination of the barn frame. Because most of the framing components are sawn, with the exception of the tie beams and purlins, it may be possible to differentiate the sawing technology of the majority of the frame from that of the 1865 addition, and then compare the sawing technology of the existing truss chords with that of the 1846 and 1865 components of the frame, thus dating the existing chords.