Vehicle Technologies and ADAS Systems

- By Mike Marshall
- Owner of MLM Diagnostic Services
- Provides electrical testing, diagnostics, programming and calibration services to collision repair shops in NH and MA.

What is ADAS?

- **Adaptive Driver Assistance Systems (ADAS) are new automotive electronic safety systems that provide a level of automatic driver and vehicle protection. ADAS enhances the driver's experience while providing an increased level of safety.**

- https://www.mouser.com/applications/automotive-adas

What are some of the common ADAS systems components?

- Blind Spot System
- Cross Traffic Alert System
- 360 Degree/Panoramic view/Peripheral Camera systems
- Sonar Parking System and Automatic Parallel Parking System
- Adaptive Cruise Control (Radar, Lidar, Camera) and Autonomous emergency braking
- Lane Departure Assist/Road Sign Recognition

Toyota BSM (Blind Spot Monitoring) System

- This system is similar in design and operation as most others

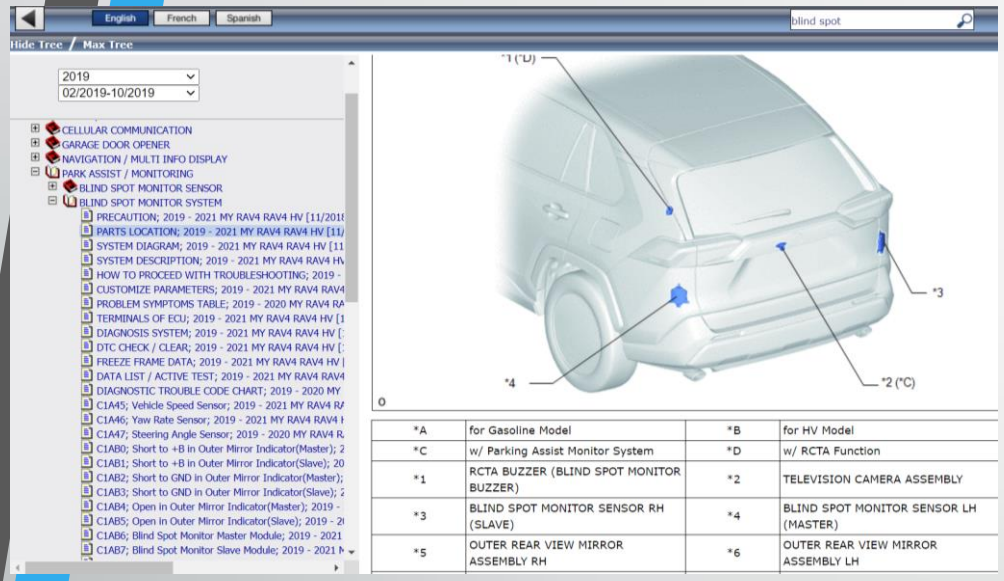

*A	for Gasoline Model	*B	for HV Model
*C	w/ Parking Assist Monitor System	*D	w/ RCTA Function
*1	RCTA BUZZER (BLIND SPOT MONITOR BUZZER)	*2	TELEVISION CAMERA ASSEMBLY
*3	BLIND SPOT MONITOR SENSOR RH (SLAVE)	*4	BLIND SPOT MONITOR SENSOR LH (MASTER)
*5	OUTER REAR VIEW MIRROR ASSEMBLY RH	*6	OUTER REAR VIEW MIRROR ASSEMBLY LH

Parts locations from Toyota Service info

Driver BSM warning in outside mirrors

BSM sensor mounted behind rear bumper cover

Images and info from www.techinfo.Toyota.com

BSM and Cross Traffic Alert System operation

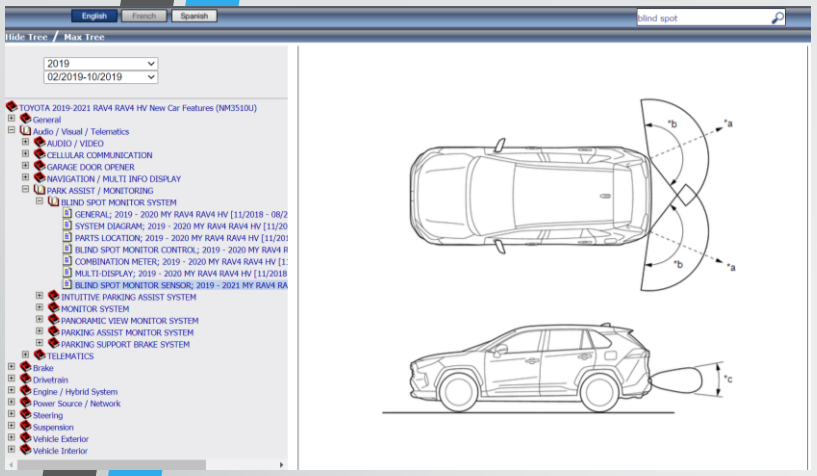

- (1) Blind spot monitor function

- The blind spot monitor system is a function that assists the driver in making the decision to change lanes. The function uses quasi-millimeter wave radar to detect vehicles that are traveling in an adjacent lane in the area that is not reflected in the outer rear view mirror assembly. The function advises the driver of the existence of a vehicle by illuminating the outer rear view mirror indicator on the outer rear view mirror assembly.

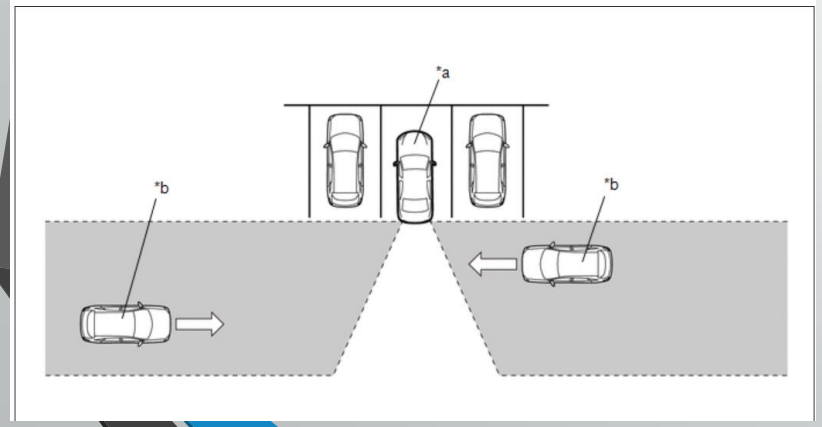

- (2) Rear cross traffic alert function

- The rear cross traffic alert function is a function that informs the driver of an approaching vehicle from diagonally behind. The function uses quasi-millimeter wave radar to detect the positions of and relative speed to a vehicle. When the function determines that a vehicle is approaching this vehicle, this function informs the driver of it using the indicators and buzzer.

Images and info from www.techinfo.Toyota.com

BSM and Cross Traffic System Service

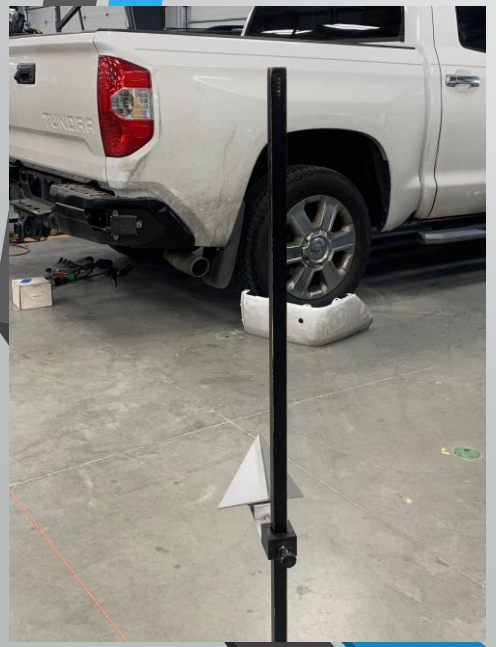

- When a vehicle is in a collision, calibration is imperative for 2 main reasons!!
  - 1-The system will not operate properly which may result in a collision
  - 2-The vehicle will return with the code above, which normally takes about 6 months or more.
- *The sensors do a self test when driven to determine if their aim is correct, but this test takes many miles to complete.*

Images and info from www.techinfo.Toyota.com

This is why calibrations are so important, this sensor is not mounted properly and will cause a safety concern.

Parking Assist and Camera Systems

Peripheral Camera System Layout

- The peripheral camera system consists of 4 cameras. They are located in the radiator grille, in both side exterior mirrors and in the rear lid. The system helps the driver when parking, maneuvering or when driving off-road. The camera images are displayed on the Front Information Display Control Head - J685- .

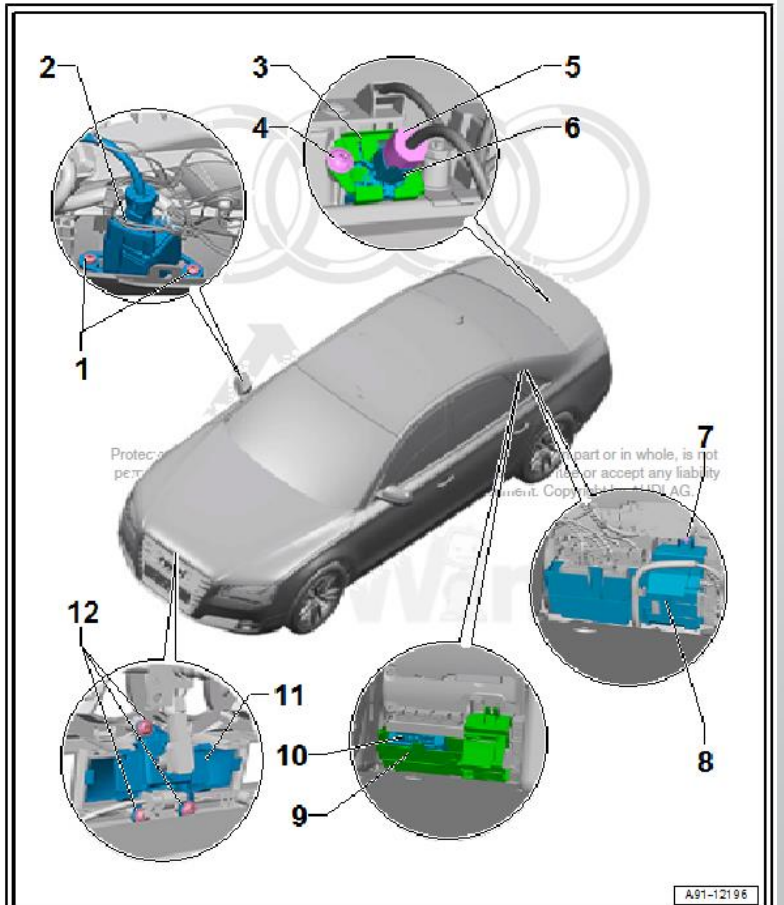

Info and images from www.Erwin.audiusa.com

Parking Assist and Camera Systems

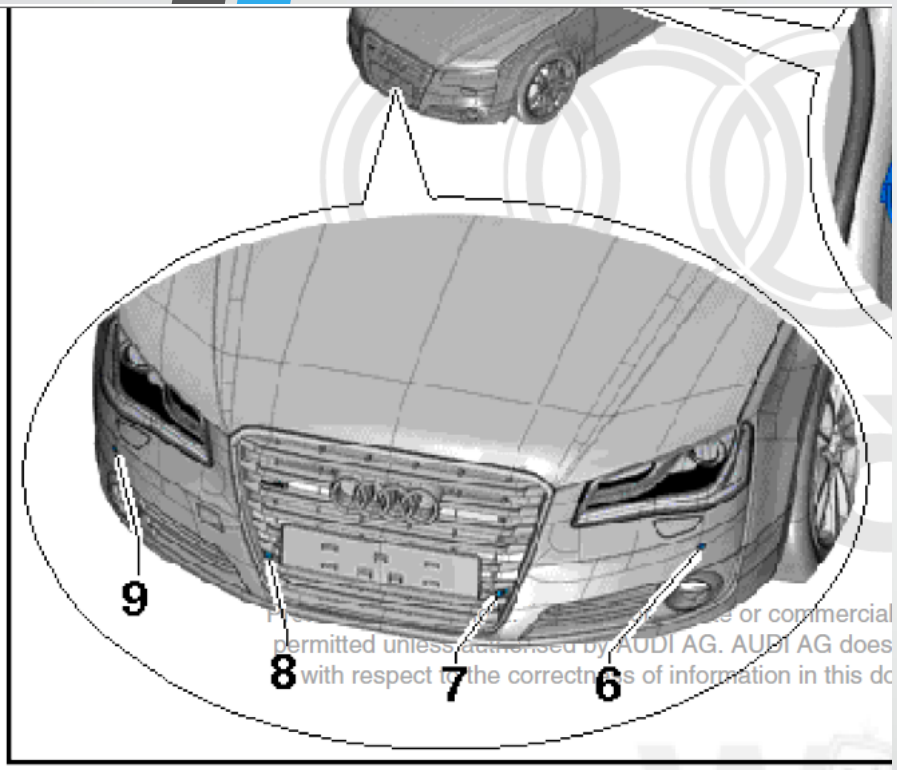

- Parking Assist/Sonar systems use sensors mounted in the rear and often the front of the vehicle
- These sensors detect objects and alert the driver of anything in the area.
- This type of system does not work like a camera. Some will only have an audible alert; others will have a display which will change colors as the vehicle approaches an object.
- These sensors assist in self parking

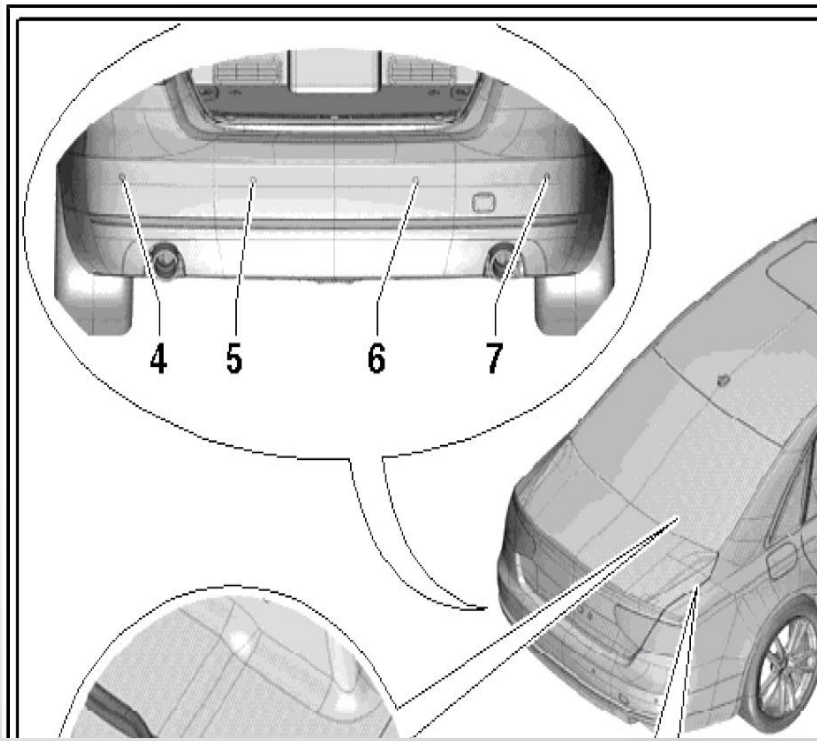

Info and images from www.Erwin.audiusa.com

Parking Assist and Camera Systems Service after an accident

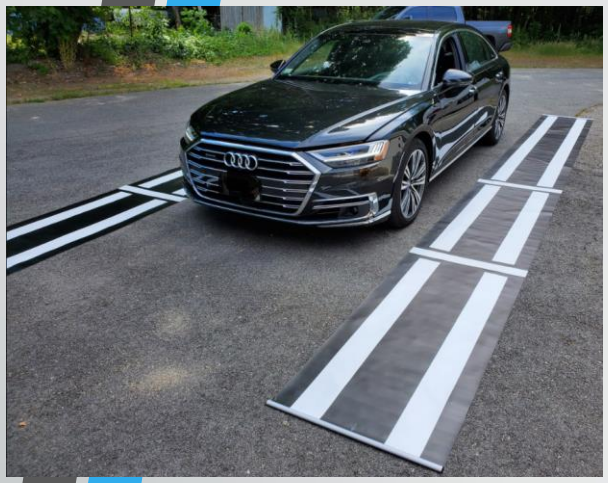

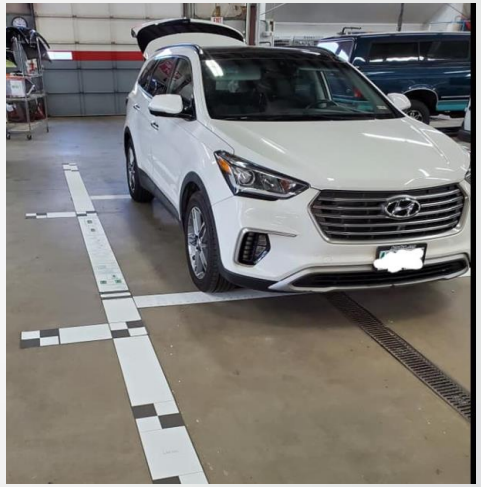

Camera systems all require service after an accident.

Most use a series of mats laid, and some will use a calibration drive

If system is not calibrated, images will not appear correct and will be distorted

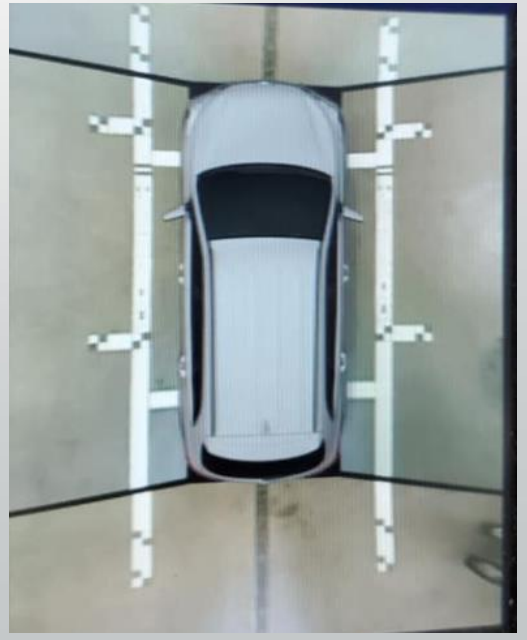

Adaptive Cruise Control systems

- The ACC system functions much like a standard cruise control system. The ACC system automatically adjusts the vehicle speed to maintain a set distance gap from the front of the vehicle and the vehicle in the same path of travel. When the ACC system is on and is following a vehicle or a vehicle enters the same driving lane, a follow vehicle graphic is displayed in the message center.

www.motorcraftservice.com

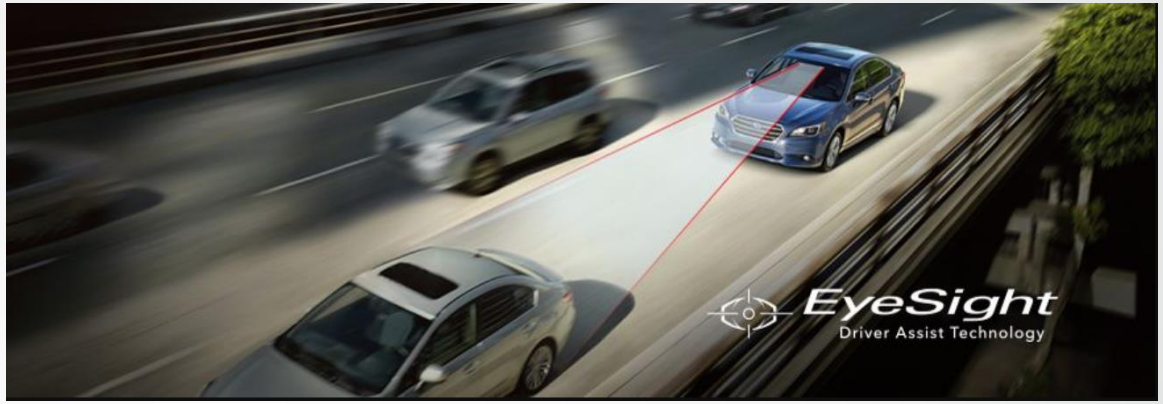

www.Subaru.com

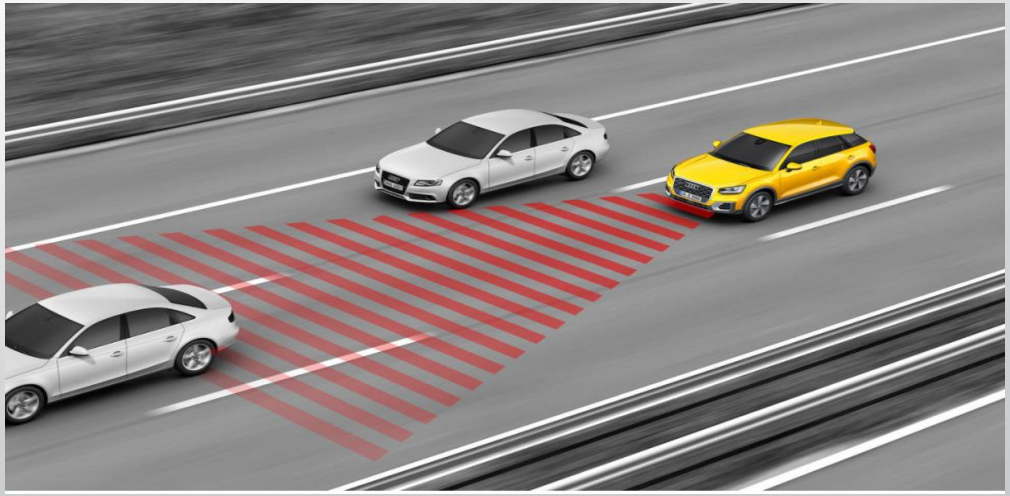

https://www.audi-mediacenter.com/en/photos/detail/adaptive-cruise-control-42099

Adaptive Cruise Control systems

- Adaptive Cruise control (ACC) systems have either a radar sensor or stereo camera
  - Radars are mounted behind front bumper or emblem
  - Stereo camera is mounted behind windshield.
- These systems can maintain vehicle speed, a gap to vehicle in front, emergency braking, and can stop the vehicle completely; some will even accelerate vehicle from a stop allowing vehicle to drive in traffic without driver input to brake or gas.
- Some vehicles do not have an adaptive function but have an autonomous emergency braking (AEB) system. This system will brake the vehicle if the rate of closure is excessive. They still have a front radar and require calibrations

Adaptive Cruise Control systems

-Service after service

- All front radars require service after a collision.
  - Most require targets, as shown
  - Some are dynamic
- If alignment is not completed, vehicle may operate improperly and cause an accident. These sensors will actually drive the vehicle and brake it.
- Radars often emit a signal beyond 300 feet in front of the vehicle. A small deviation at the sensor will be many feet throughout the operating range.
- Sensors require precise measurements and often have a specification of 1degree or less variance.

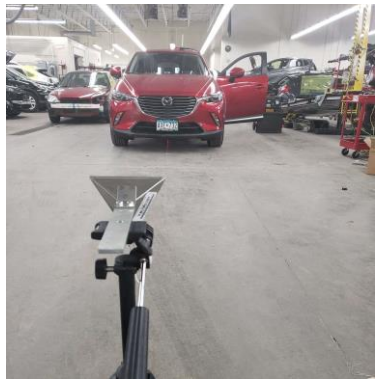

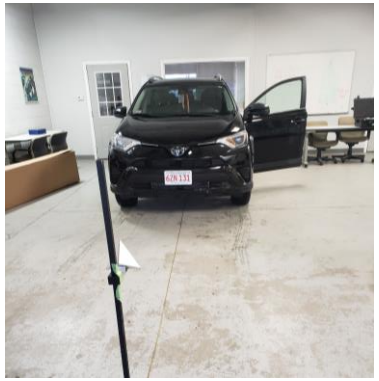

Lane Departure Systems/road sign recognition

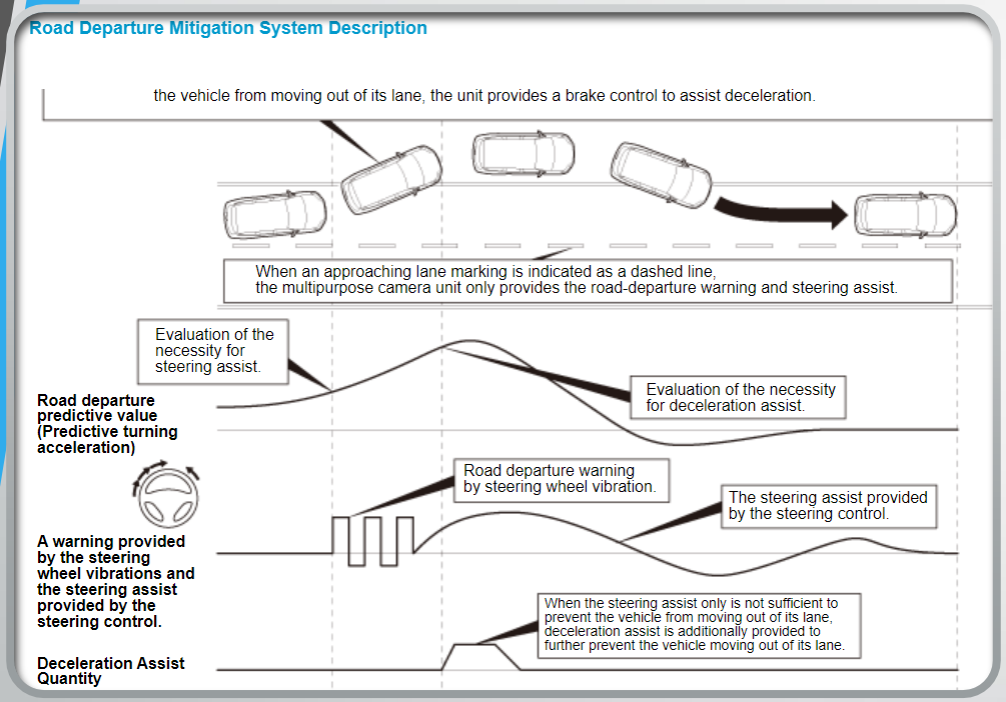

- The Road Departure Mitigation (RDM) system uses image information from the multipurpose camera to recognize the lane markings on the road. The multipurpose camera unit monitors the lane markings and detects risks of the vehicle moving out of its lane. When the unit determines that the vehicle begins to move out of its lane, the unit warns the driver by vibrating the steering wheel, showing a road-departure warning image on the multi information display (MID) and also provides steering control to assist steering the vehicle back in its lane to prevent the vehicle from moving out of its lane. When the multipurpose camera unit determines that steering control is not sufficient to prevent the vehicle moving out if its lane and the approaching lane marking on the road is indicated as a solid line, the unit also provides a brake control to assist decelerating the vehicle. When the vehicle goes out of a lane or the multipurpose camera unit determines that the vehicle begins to move out of its lanes for the third time after moving out of its lane twice in a row without the driver's steering action, the unit warns the driver with only an MID warning image and a buzzer sound without providing steering control.

www.techinfo.honda.com

Lane Departure Systems/Road Sign Recognition

- The Road Departure Mitigation (RDM) system uses image information from the multipurpose camera to recognize the lane markings on the road. The multipurpose camera unit monitors the lane markings and detects risks of the vehicle moving out of its lane. When the unit determines that the vehicle begins to move out of its lane, the unit warns the driver by vibrating the steering wheel, showing a road-departure warning image on the multi information display (MID) and also provides steering control to assist steering the vehicle back in its lane to prevent the vehicle from moving out of its lane. When the multipurpose camera unit determines that steering control is not sufficient to prevent the vehicle moving out if its lane and the approaching lane marking on the road is indicated as a solid line, the unit also provides a brake control to assist decelerating the vehicle. When the vehicle goes out of a lane or the multipurpose camera unit determines that the vehicle begins to move out of its lanes for the third time after moving out of its lane twice in a row without the driver's steering action, the unit warns the driver with only an MID warning image and a buzzer sound without providing steering control.

www.techinfo.honda.com

Lane Departure Systems/Road Sign Recognition

- Uses a camera mounted to the windshield
- Camera often integrates functions with the front radar for collision assist
- Recognizes street signs and displays limit on cluster, some will adjust vehicle speed to match sign (adaptive cruise systems)
- Stereo camera systems often integrate lane departure with adaptive cruise and emergency braking in one unit

https://www.verneidehondasiouxcity.com/what-is-the-honda-lane-keeping-assist-system-lkas

Lane Departure Systems/Road Sign Recognition service

- These systems require calibrations after collision repairs, windshield removal/replacement, severe vehicle wheel alignment

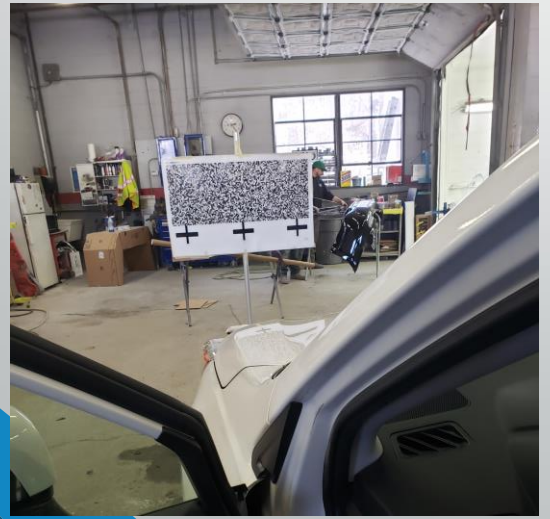
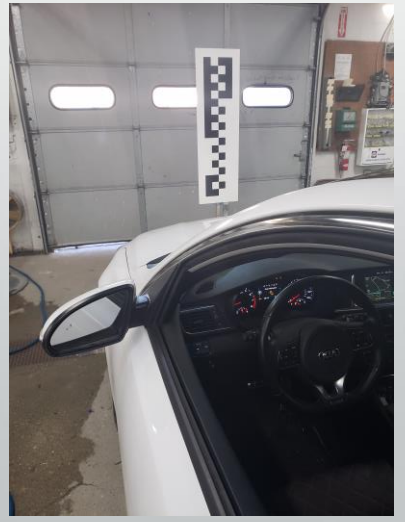
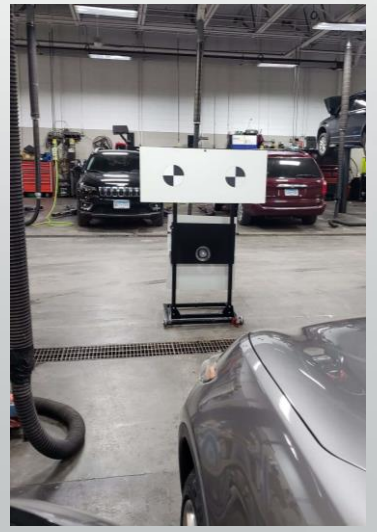
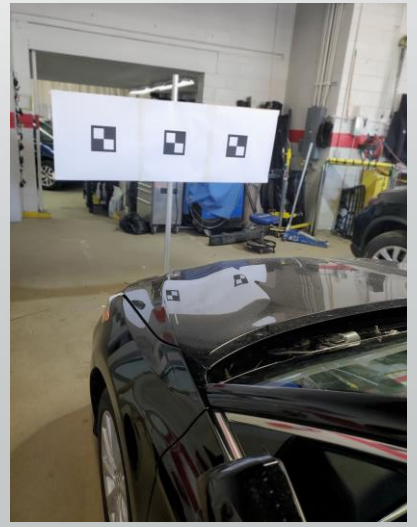
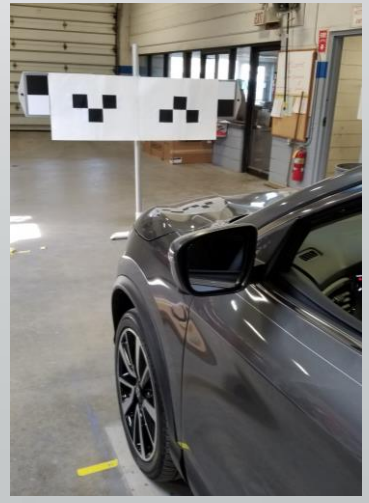

Why are these things on all these cars?

- These systems are the predecessor to autonomous vehicles
  - Manufactures are able to test systems, components, calibration procedures, reliabilities, and build technology
  - They can mask it as safety features to consumers
  - These systems are effective in reducing accidents
    - When an ADAS equipped vehicle is in an accident (when all functions are enabled and in use), the severity is usually reduced
  - Collision shops often think they are there to make their lives more difficult!

Conclusion

- Vehicle safety has increased tremendously in a short period of time
  - This is from structural, traction control systems, airbag system improvements
- ADAS systems started production as early as the mid 2000's.
  - Became more mainstream around 2015 with almost every car equipped in 2020
- A modern vehicle is very complex and requires highly skilled technicians, training and tooling in order for systems to operate as designed.
- ADAS system repairs and maintenance procedures are outlined in OEM service information, they are required to be followed since a modern vehicle can now steer, stop and accelerate a vehicle.
- While these ADAS systems are amazing, they have weak points
  - Cameras can struggle to see pedestrians, lines, signs, etc due to poor weather and lighting conditions
  - Thermal imaging is being produced to assist this weakness, some vehicles are equipped but not many
  - Some systems will not self test alignment of the sensors.
    - This will result in system operation but may not see vehicles in front, brake at wrong times or cause other general and safety concerns
- This can be thought of as a predecessor to a fully autonomous vehicle.

References

- www.techinfo.Toyota.com
- www.Erwin.audiusa.com
- https://www.audi-mediacenter.com/en/photos/detail/adaptive-cruise-control-42099
- www.Subaru.com
- www.motorcraftservice.com
- www.hondatechinfo.com
- https://www.verneidehondasiouxcity.com/what-is-the-honda-lane-keeping-assist-system-lkas
- www.mlmdiagnostics.com