STATE OF NEW HAMPSHIRE
DEPARTMENT OF TRANSPORTATION
CONSTRUCTION PLANS

NH PROJECT NO. 13678F, A000 (911)

US ROUTE 1 MEMORIAL BRIDGE, KITTERY APPROACH SPANS AND SCOTT AVENUE BRIDGE REPLACEMENT PROJECT

DESIGN DATA

AVERAGE DAILY TRAFFIC 2006	10,000
AVERAGE DAILY TRAFFIC 2027	11,000
PERCENT OF TRUCKS	2.3%
DESIGN SPEED	25 MPH
LENGTH OF PROJECT	0.27 MILES

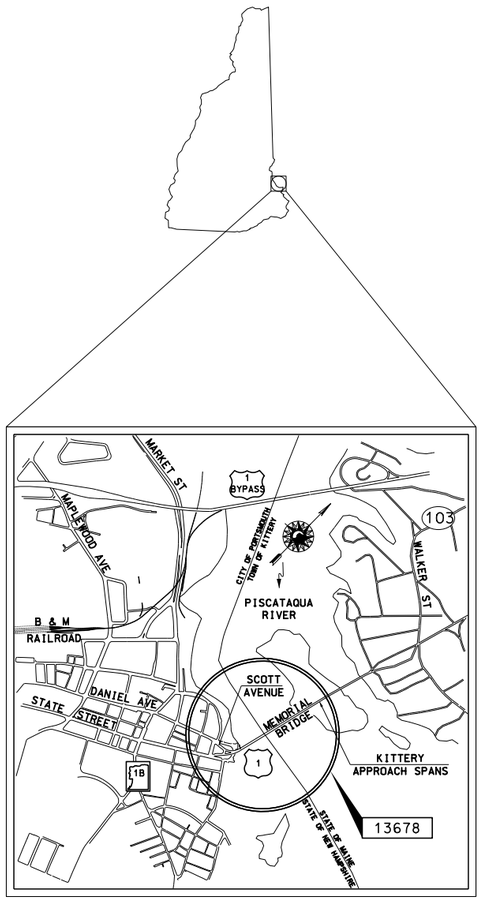

LOCATION MAP

1 ½ 0 1 2 mi.

GRAPHIC SCALE

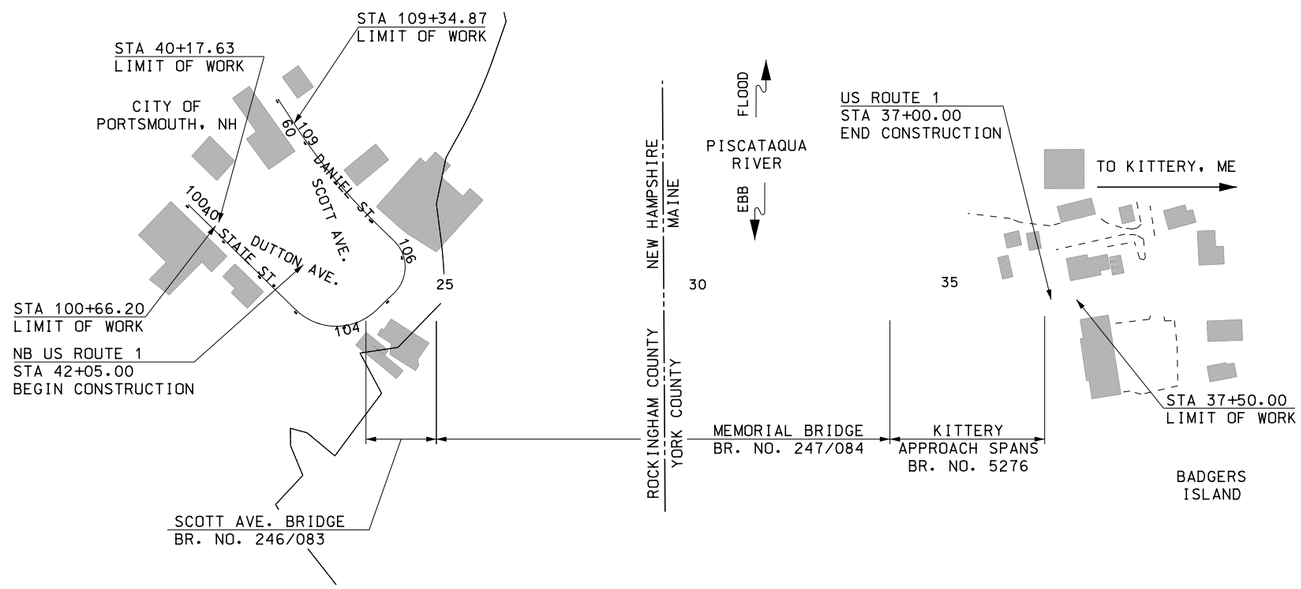

CITY OF PORTSMOUTH, NH
AND TOWN OF KITTERY, ME

COUNTY OF ROCKINGHAM, NH AND
COUNTY OF YORK, ME

SCALE: 1" = 150'

80% Submission
January 10, 2012

DRAWN BY SPL	DATE 9-9-11		
CHECKED BY GT	DATE 9-9-11		

ARCHER WESTERN CONTRACTORS

HNTB Corporation
The HNTB Companies
Engineers Architects Planners

FEDERAL PROJECT NO.	STATE PROJECT NO.	SHEET NO.	TOTAL SHEETS
	13678F	1	XXX

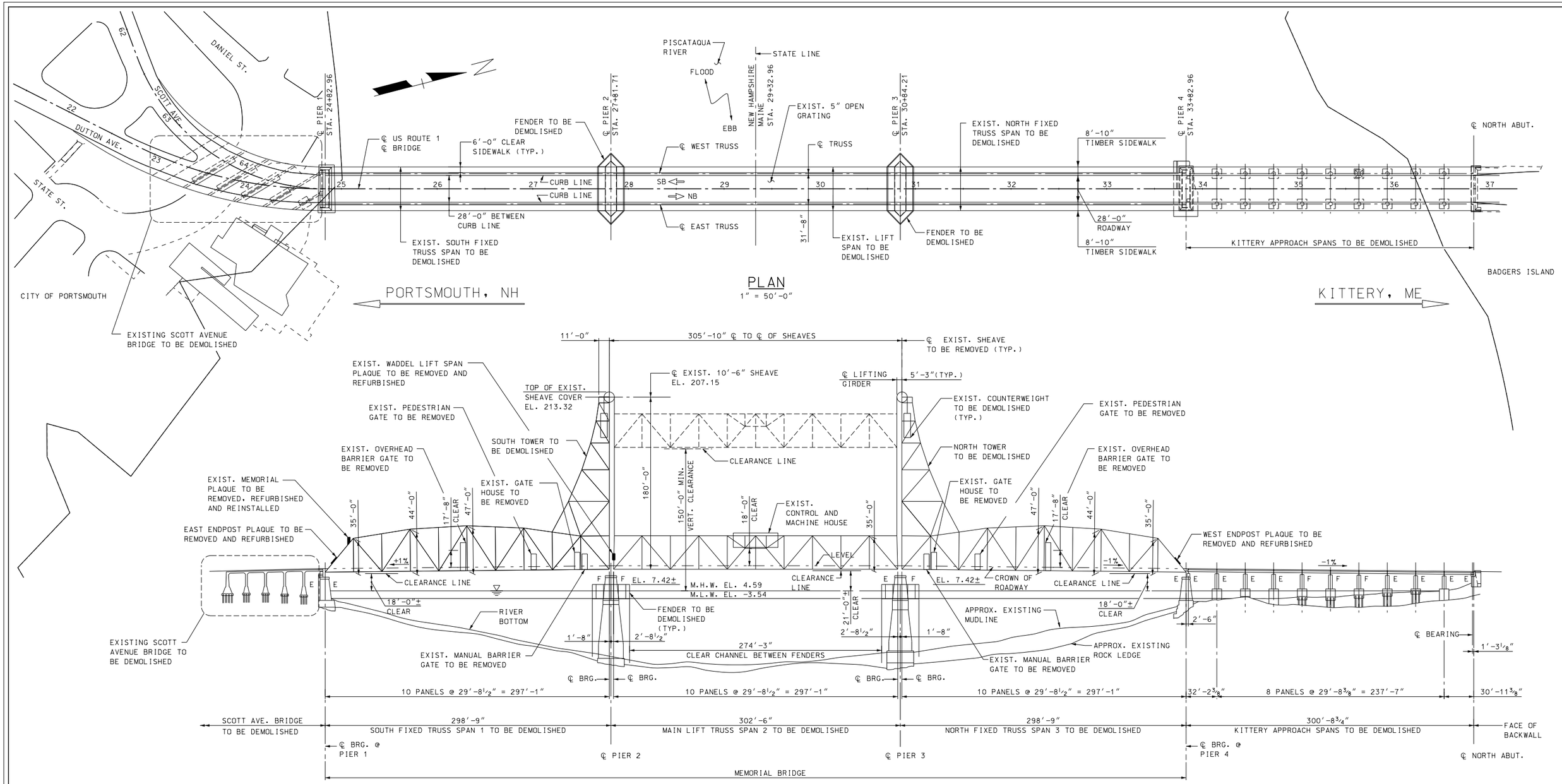

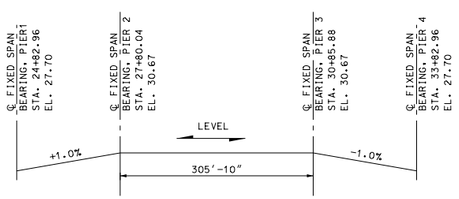

US ROUTE 1 - EXISTING PROFILE GRADE LINE

N.T.S.

LEGEND:

E INDICATES EXPANSION BEARING

F INDICATES FIXED BEARING

NOTES:

1. FOR TYPICAL EXISTING CROSS SECTIONS, SEE BRIDGE SHEET D2.
2. ALL ELEVATIONS REFER TO THE NATIONAL OCEANIC AND ATMOSPHERIC ADMINISTRATION TIDAL BENCH MARK AT PORTSMOUTH NAVY SHIP YARD FOR WHICH ELEVATION -3.54 IS MEAN LOW WATER PER NATIONAL GEODETIC VERTICAL DATUM OF 1929.

80% Submission
January 10, 2012

ARCHER WESTERN CONTRACTORS

HNTB
HNTB Corporation
The HNTB Companies
Engineers Architects Planners

SUBDIRECTORY	.DGN LOCATOR	SHEET SCALE
	$FILENAME$	AS NOTED

STATE OF NEW HAMPSHIRE
DEPARTMENT OF TRANSPORTATION * BUREAU OF BRIDGE DESIGN

TOWN PORTSMOUTH, NH. - KITTERY, ME. BRIDGE NO. 247 \ 084 STATE PROJECT 13678F

LOCATION U.S. ROUTE 1 OVER PISCATAQUA RIVER

DEMOLITION - PLAN AND ELEVATION

REVISIONS AFTER PROPOSAL		BY	DATE		BY	DATE
	DESIGNED	GT	09/11	CHECKED	TPZ	09/11
	DRAWN	SPL	09/11	CHECKED	JN	09/11
	QUANTITIES	XX	XX/XX	CHECKED	XX	XX/XX

ISSUE DATE
REV. DATE
FEDERAL PROJECT NO.
SHEET NO.

BRIDGE SHEET D1 OF
FILE NUMBER 107-1-1
TOTAL SHEETS

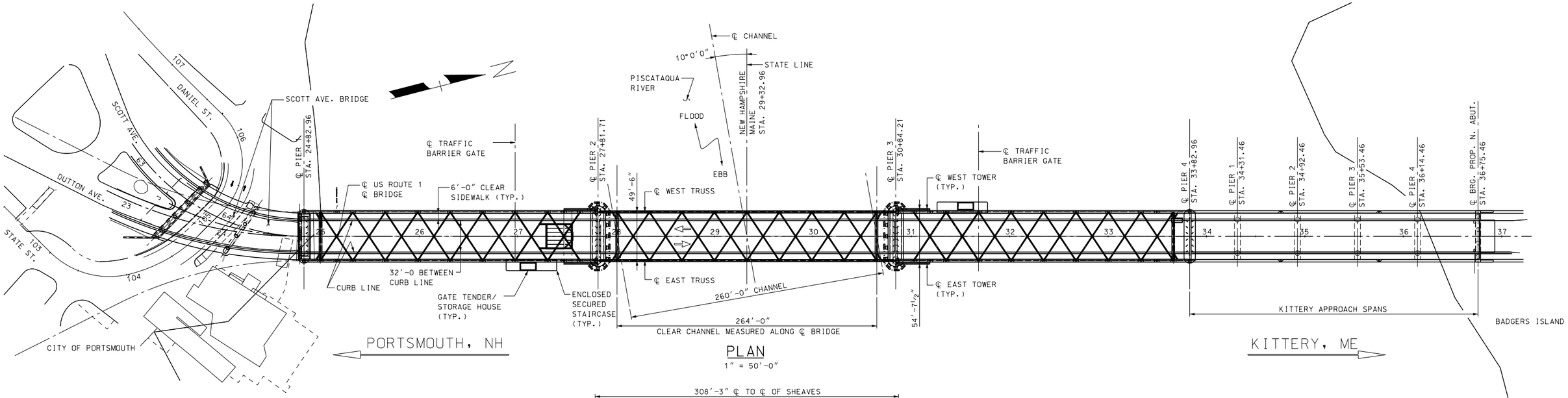

PLAN

1" = 50'-0"

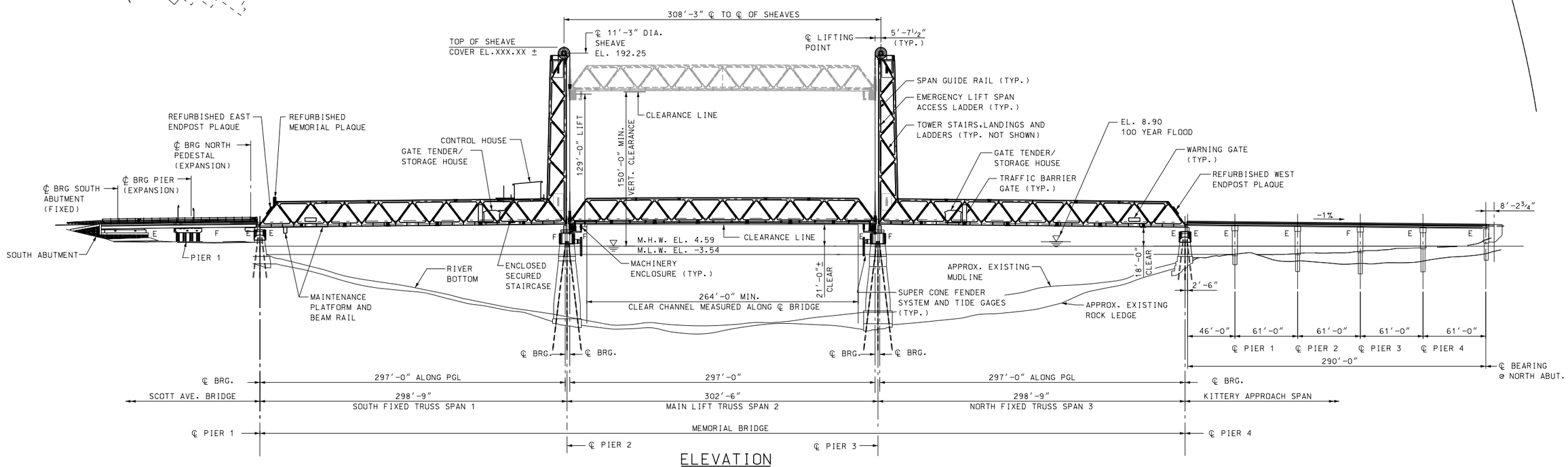

ELEVATION

1" = 50'-0"

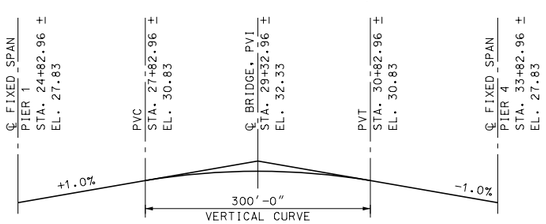

US ROUTE 1 - PROPOSED PROFILE GRADE LINE

N.T.S.

LEGEND:

E INDICATES EXPANSION BRIDGE SHOE

F INDICATES FIXED BRIDGE SHOE

NOTES:

1. ALL ELEVATIONS REFER TO THE NATIONAL OCEANIC AND ATMOSPHERIC ADMINISTRATION TIDAL BENCH MARK AT PORTSMOUTH NAVY SHIP YARD FOR WHICH ELEVATION -3.54 IS MEAN LOW WATER PER NATIONAL GEODETIC VERTICAL DATUM OF 1929.

80% Submission
January 10, 2012

ARCHER WESTERN CONTRACTORS

HNTB

HNTB Corporation
The HNTB Companies
Engineers Architects Planners

SUBDIRECTORY	.DGN LOCATOR	SHEET SCALE
	$FILENAME$	1" = 50'-0"

STATE OF NEW HAMPSHIRE
DEPARTMENT OF TRANSPORTATION * BUREAU OF BRIDGE DESIGN

TOWN PORTSMOUTH, NH. - KITTERY, ME. BRIDGE NO. 247 \ 084 STATE PROJECT 13678F

LOCATION U.S. ROUTE 1 OVER PISCATAQUA RIVER

GENERAL PLAN AND ELEVATION

REVISIONS AFTER PROPOSAL		BY	DATE		BY	DATE
	DESIGNED	TPZ	09/11	CHECKED	GT	09/11
	DRAWN	PRE	09/11	CHECKED	GT	09/11
	QUANTITIES	XX	XX/XX	CHECKED	XX	XX/XX
	ISSUE DATE		FEDERAL PROJECT NO.		SHEET NO.	
	REV. DATE					

BRIDGE SHEET B1 OF

FILE NUMBER 107-1-1

TOTAL SHEETS

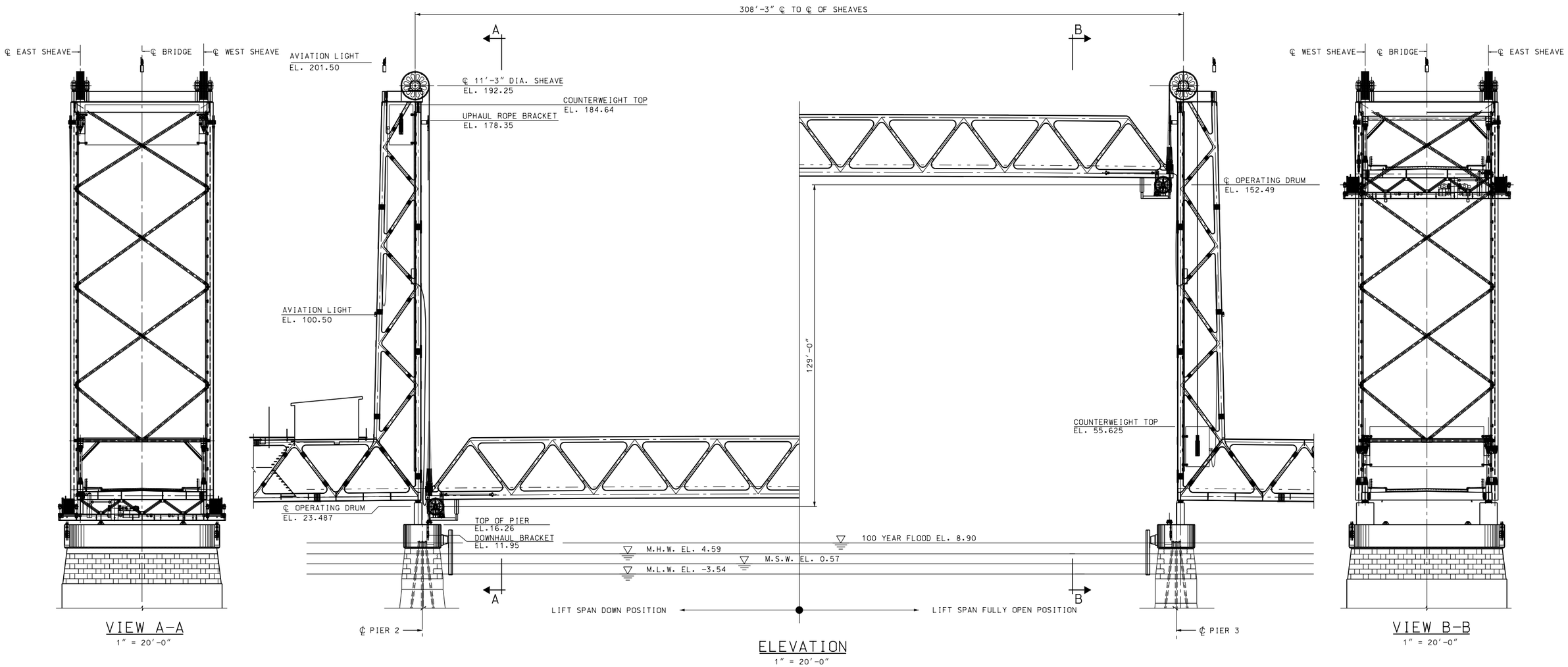

NOTES:

1. FOR GENERAL PLAN AND ELEVATION, SEE BRIDGE SHEET B1.
2. FOR TYPICAL FIXED SPAN DECK CROSS SECTION AND LIFT SPAN DECK CROSS SECTION, SEE BRIDGE SHEETS B15 AND B41 RESPECTIVELY.
3. FOR TYPICAL FIXED SPAN TRUSS AND LIFT SPAN TRUSS GEOMETRY, SEE BRIDGE SHEETS B16 AND B42 RESPECTIVELY.
4. FOR TOWER GEOMETRY, SEE BRIDGE SHEET B30.

Progress Plan
January 27, 2012

ARCHER WESTERN CONTRACTORS

HNTB
HNTB Corporation
The HNTB Companies
Engineers Architects Planners

SUBDIRECTORY	.DGN LOCATOR	SHEET SCALE
	$FILENAME$	1" = 20'-0"

STATE OF NEW HAMPSHIRE
DEPARTMENT OF TRANSPORTATION * BUREAU OF BRIDGE DESIGN

TOWN PORTSMOUTH, NH. - KITTERY, ME. BRIDGE NO. 247 \ 084 STATE PROJECT 13678F

LOCATION U.S. ROUTE 1 OVER PISCATAQUA RIVER

BRIDGE OPENING DIAGRAM

BRIDGE SHEET B1A OF

REVISIONS AFTER PROPOSAL	BY	DATE		BY	DATE
DESIGNED	JN	09/11	CHECKED	GT	09/11
DRAWN	JN	09/11	CHECKED	TPZ	09/11
QUANTITIES			CHECKED		

ISSUE DATE	FEDERAL PROJECT NO.	SHEET NO.	TOTAL SHEETS
REV. DATE			

FILE NUMBER 107-1-1

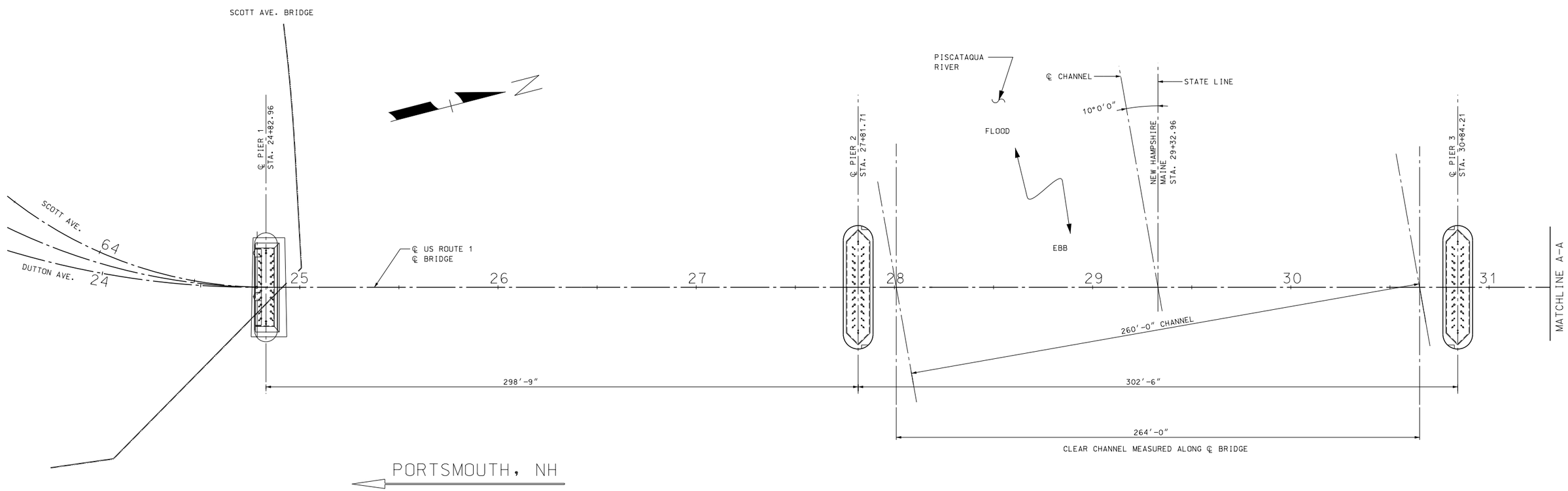

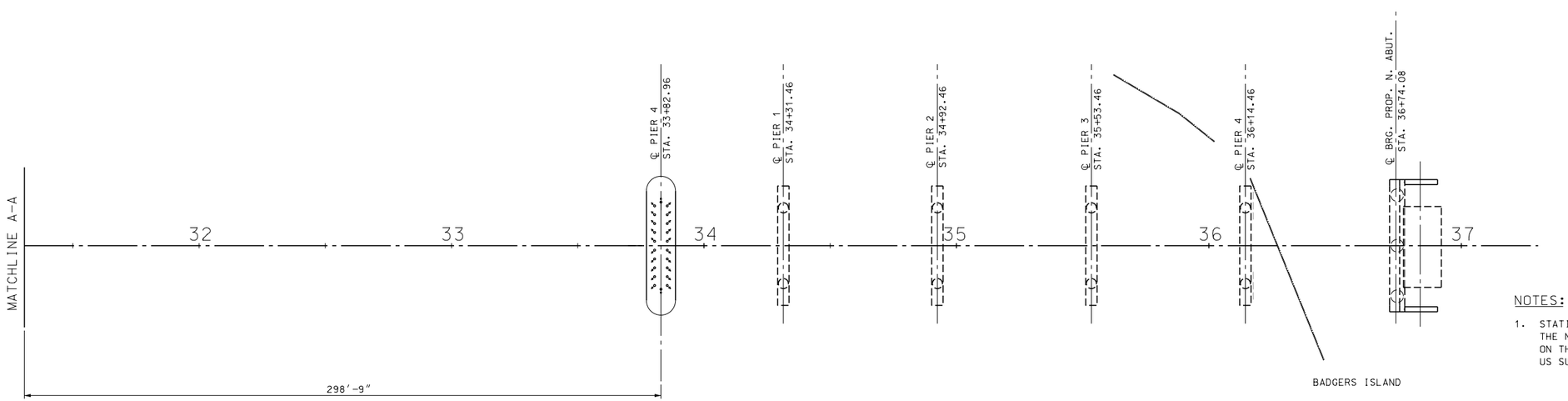

PLAN

1" = 25'-0"

NOTES:

1. STATIONING OF EXISTING SUBSTRUCTURES ARE BASED ON THE NEW HAMPSHIRE STATE PLANE COODINTATE SYSTEM (SPCS) ON THE NORTH AMERICAN DATUM OF 1983(86), US SURVEY FEET (NAD 86(96)).

Progress Plan
January 27, 2012

ARCHER WESTERN CONTRACTORS

HNTB
HNTB Corporation
The HNTB Companies
Engineers Architects Planners

SUBDIRECTORY	.DGN LOCATOR	SHEET SCALE
	$FILENAME$	1" = 25'-0"

STATE OF NEW HAMPSHIRE
DEPARTMENT OF TRANSPORTATION * BUREAU OF BRIDGE DESIGN

TOWN PORTSMOUTH, NH. - KITTERY, ME. BRIDGE NO. 247 \ 084 STATE PROJECT 13678F

LOCATION U.S. ROUTE 1 OVER PISCATAQUA RIVER

FOUNDATION LAYOUT PLAN

REVISIONS AFTER PROPOSAL		BY	DATE		BY	DATE
	DESIGNED	TPZ	09/11	CHECKED	GT	09/11
	DRAWN	PRE	09/11	CHECKED	JN	09/11
	QUANTITIES	XX	XX/XX	CHECKED	XX	XX/XX
	ISSUE DATE		FEDERAL PROJECT NO.		SHEET NO.	
	REV. DATE					

BRIDGE SHEET B2 OF

FILE NUMBER 107-1-1

TOTAL SHEETS

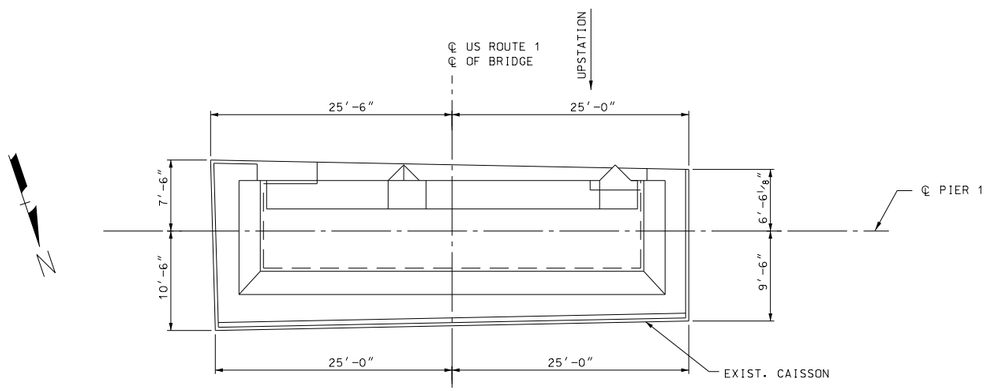

PIER 1 – PLAN

1/8" = 1'-0"

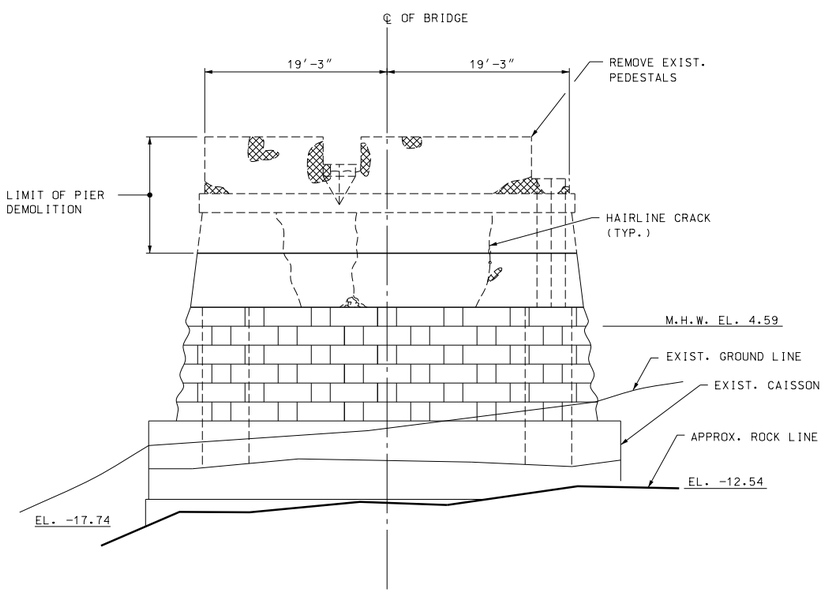

PIER 1 – NORTH ELEVATION

1/8" = 1'-0"

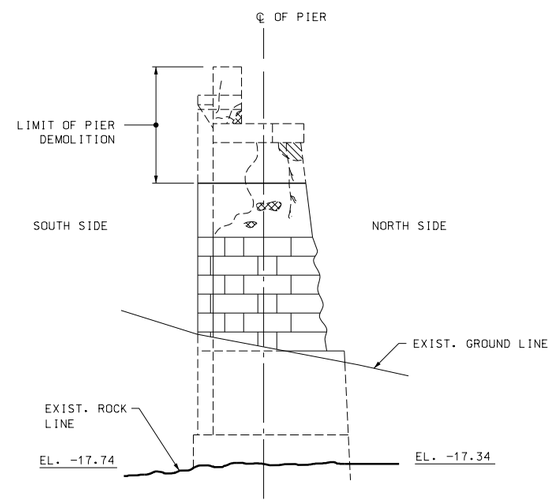

PIER 1 – EAST END ELEVATION

1/8" = 1'-0"

LEGEND:

- AREA OF CONCRETE DELAMINATION
- AREA OF CONCRETE SPALL
- AREA OF MAP CRACKING WITH SALT EFFLORESCENCE
- AREA OF SALT EFFLORESCENCE
- AREA OF PREVIOUS CONCRETE REPAIR

NOTES:

1. FOR PIER RETROFIT PLAN, SEE BRIDGE SHEET B3A.
2. LIMIT OF PIER DEMOLITION IS THE MINIMUN REQUIRED REMOVAL DEPTH TO ALLOW FOR PIER RECONTRUCTION. FINAL REMOVAL LIMITS WILL BE DEPENDANT ON THE ACTUAL CONDITION OF THE EXISTING PIER CONCRETE AS FOUND IN THE FIELD BY THE CONTRACTOR. ALL REMOVALS SHALL BE TO SOUND CONCRETE, AS INDICATED BY THE ENGINEER.
3. ALL DIMENSIONS AND ELEVATIONS SHOWN IN THIS DRAWING ARE BASED ON THE AVAILABLE RECORD DRAWINGS AND SHALL BE VERIFIED BY CONTRACTOR.

Progress Plan
January 27, 2012

ARCHER WESTERN CONTRACTORS

HNTB
HNTB Corporation
The HNTB Companies
Engineers Architects Planners

SUBDIRECTORY	.DGN LOCATOR	SHEET SCALE
	$FILENAME$	1/8 "=1'-0"

STATE OF NEW HAMPSHIRE
DEPARTMENT OF TRANSPORTATION * BUREAU OF BRIDGE DESIGN

TOWN PORTSMOUTH, NH. - KITTERY, ME. BRIDGE NO. 247 \ 084 STATE PROJECT 13678F

LOCATION U.S. ROUTE 1 OVER PISCATAQUA RIVER

PIER 1 - DEMOLITION PLAN AND ELEVATIONS

REVISIONS AFTER PROPOSAL			BY	DATE		BY	DATE
		DESIGNED	HHW	09/11	CHECKED	JN	09/11
		DRAWN	PRE	09/11	CHECKED	GT	09/11
		QUANTITIES	XX	XX/XX	CHECKED	XX	XX/XX
		ISSUE DATE		FEDERAL PROJECT NO.		SHEET NO.	
		REV. DATE					

BRIDGE SHEET B3 OF

FILE NUMBER 107-1-1

TOTAL SHEETS

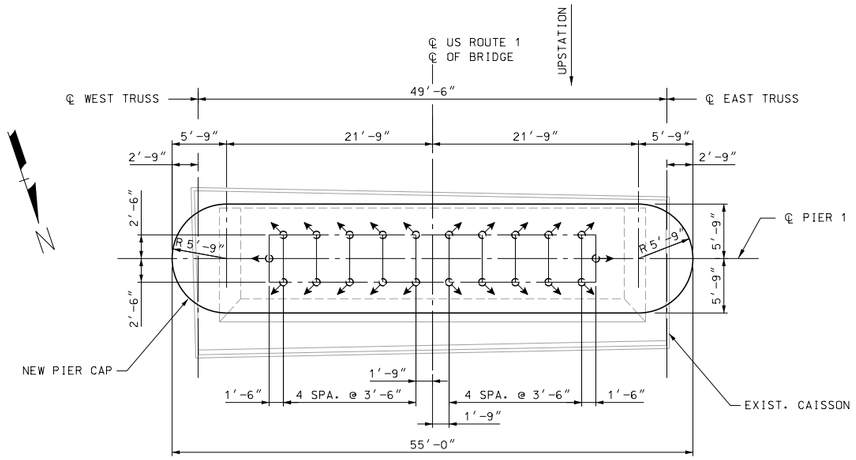

PIER 1 – PLAN

1/8″ = 1′-0″

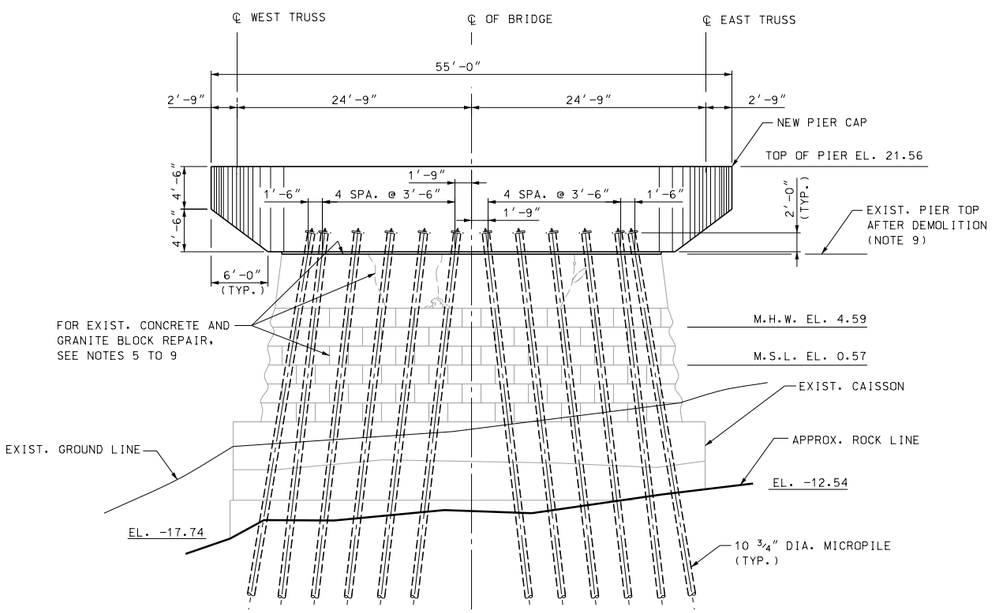

PIER 1 – SOUTH ELEVATION

1/8″ = 1′-0″

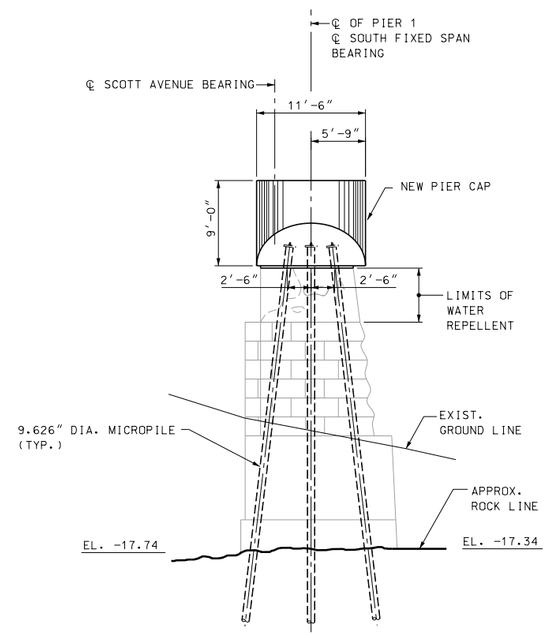

PIER 1 – EAST END ELEVATION

1/8″ = 1′-0″

LEGEND:

DENOTES BATTERED MICROPILES AND DIRECTION OF BATTER PILE SLOPE 2:12 (2 HORIZONTAL ON 12 VERTICAL)

NOTES:

1. FOR MICROPILE DETAILS, SEE BRIDGE SHEET B8.
2. FOR MICROPILE ROCK SOCKET LENGTH, SEE BRIDGE SHEET B8.
3. FOR PIER CAP REINFORCEMENT DETAILS, SEE BRIDGE SHEET B3B.
4. FOR LIMITS OF PIER DEMOLITION, SEE BRIDGE SHEET B3.
5. EXISTING PIER CONCRETE ABOVE THE MEAN SEA LEVEL ELEVATION SHALL BE REPAIRED FOR DELAMINATION, SPALL, CRACK AND MAP CRACKING WITH SALT EFFLORESCENCE BEFORE NEW PIER CAP INSTALLATION. MISSING GROUT ON GRANITE BLOCKS SHALL BE REPOINTED. FOR REPAIR DETAILS, SEE BRIDGE SHEET B7.
6. REPAIR LOCATIONS SHALL BE VERIFIED IN THE FIELD DURING CONSTRUCTION. THE ENGINEER SHALL MARK EXACT LIMITS IN THE FIELD.
7. ONLY CRACKS EQUAL TO OR WIDER THAN 1/16″ ARE TO BE REPAIRED.
8. WATER REPELLENT (SILANE-SILOXANE) FOR CONCRETE SHALL BE APPLIED TO ALL FACES OF STRUCTURE WITHIN LIMITS SHOWN AFTER ALL CONCRETE REPAIRS HAVE BEEN MADE.
9. EXISTING CONCRETE SURFACE BELOW NEW CONCRETE PIER CAP SHALL BE CLEANED, FREE OF LAITANCE, AND INTENTIONALLY ROUGHENED TO AN AMPLITUDE OF 0.25 IN. EXISTING CONCRETE SURFACE BELOW NEW CONCRETE PIER CAP SHALL ALSO BE REPAIRED AS INDICATED IN NOTES 5 TO 7.

Progress Plan
January 27, 2012

ARCHER WESTERN CONTRACTORS

HNTB
HNTB Corporation
The HNTB Companies
Engineers Architects Planners

SUBDIRECTORY	.DGN LOCATOR	SHEET SCALE
	$FILENAME$	1/8" = 1'-0"

STATE OF NEW HAMPSHIRE
DEPARTMENT OF TRANSPORTATION * BUREAU OF BRIDGE DESIGN

TOWN PORTSMOUTH, NH. - KITTERY, ME. BRIDGE NO. 247 \ 084 STATE PROJECT 13678F

LOCATION U.S. ROUTE 1 OVER PISCATAQUA RIVER

PIER 1 - RETROFIT PLAN AND ELEVATIONS

BRIDGE SHEET B3A OF

FILE NUMBER 107-1-1

REVISIONS AFTER PROPOSAL		BY	DATE		BY	DATE
	DESIGNED	HHW	09/11	CHECKED	JN	09/11
	DRAWN	PRE	09/11	CHECKED	GT	09/11
	QUANTITIES	XX	XX/XX	CHECKED	XX	XX/XX
	ISSUE DATE		FEDERAL PROJECT NO.		SHEET NO.	TOTAL SHEETS
	REV. DATE					

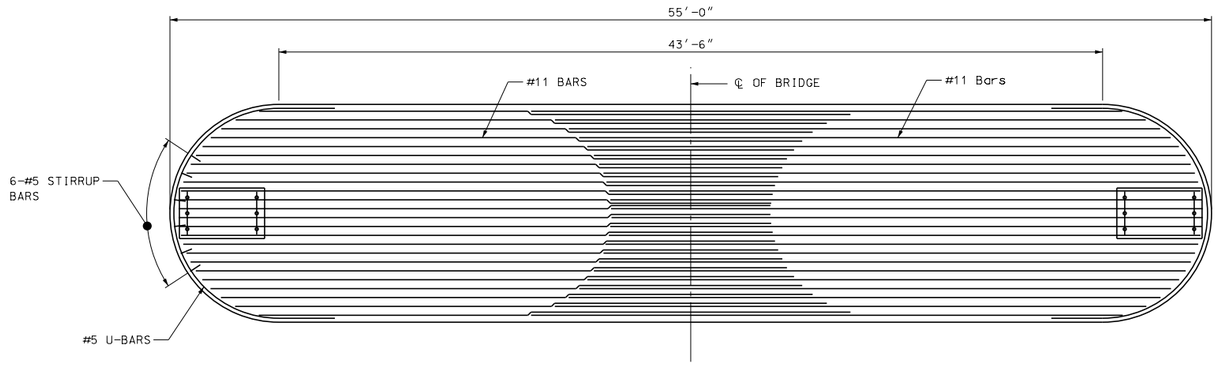

PIER 1 - SOUTH PLAN

1/4" = 1'-0"

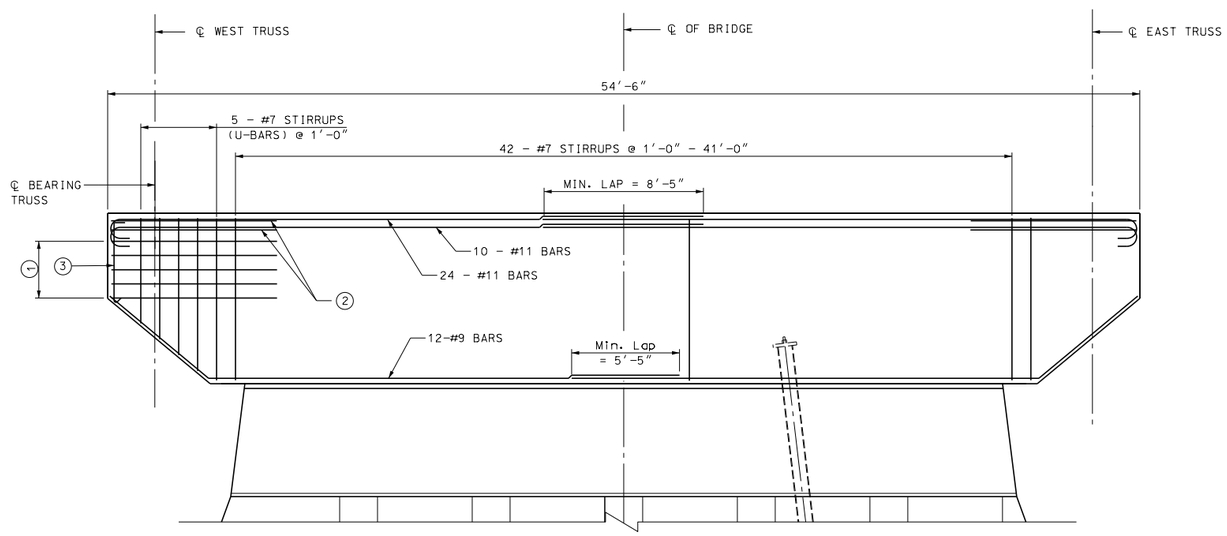

PIER 1 - SOUTH ELEVATION

1/4" = 1'-0"

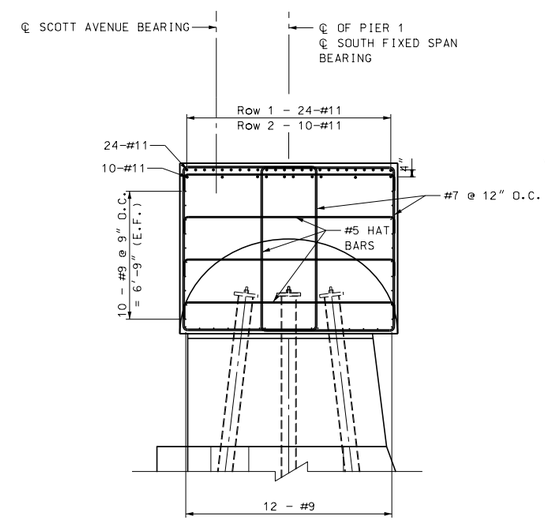

PIER 1 - TYPICAL ELEVATION

1/4" = 1'-0"

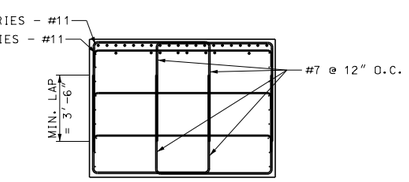

PIER 1 - CURVED END ELEVATION

1/4" = 1'-0"

LEGEND:

1. 5 - #5 "U" BARS @ 9" = 3'-0" (TO MATCH SKIN REINFORCEMENT)
2. 2 - #5 "U" BARS (TO MATCH LONGITUDINAL CAP STEEL)
3. #5 STIRRUP BARS

NOTES:

1. BOTTOM #9 BARS TO BE BENT, AND CUT TO FIT @ CAP END.
2. SKIN REINFORCEMENT NOT SHOWN FOR CLARITY.

Progress Plan
January 27, 2012

ARCHER WESTERN CONTRACTORS

HNTB
HNTB Corporation
The HNTB Companies
Engineers Architects Planners

SUBDIRECTORY	.DGN LOCATOR	SHEET SCALE
	$FILENAME$	1/4" = 1'-0"

STATE OF NEW HAMPSHIRE
DEPARTMENT OF TRANSPORTATION * BUREAU OF BRIDGE DESIGN

TOWN PORTSMOUTH, NH. - KITTERY, ME. BRIDGE NO. 247 \ 084 STATE PROJECT 13678F

LOCATION U.S. ROUTE 1 OVER PISCATAQUA RIVER

PIER 1 - PIER CAP REINFORCEMENT DETAILS

REVISIONS AFTER PROPOSAL		BY	DATE		BY	DATE
	DESIGNED	XXX	09/11	CHECKED	XXX	09/11
	DRAWN	LR	09/11	CHECKED	JN	09/11
	QUANTITIES	XX	XX/XX	CHECKED	XX	XX/XX
	ISSUE DATE		FEDERAL PROJECT NO.		SHEET NO.	
	REV. DATE					

BRIDGE SHEET B3B OF

FILE NUMBER 107-1-1

TOTAL SHEETS

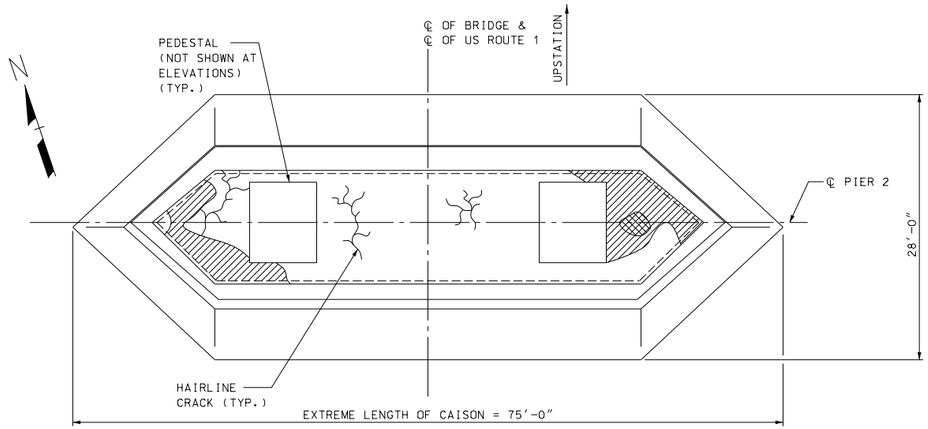

PIER 2 - PLAN

1/8" = 1'-0"

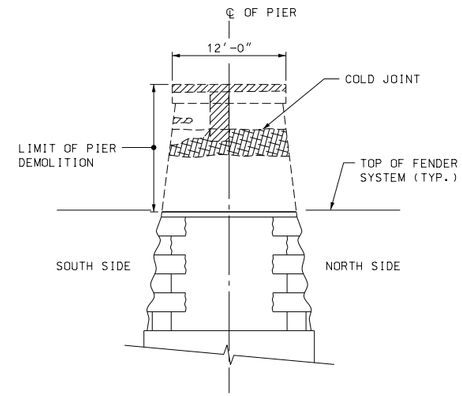

PIER 2 - EAST END ELEVATION

1/8" = 1'-0"

LEGEND:

- AREA OF CONCRETE DELAMINATION
- AREA OF CONCRETE SPALL
- AREA OF MAP CRACKING WITH SALT EFFLORESCENCE
- AREA OF SALT EFFLORESCENCE
- AREA OF PREVIOUS CONCRETE REPAIR

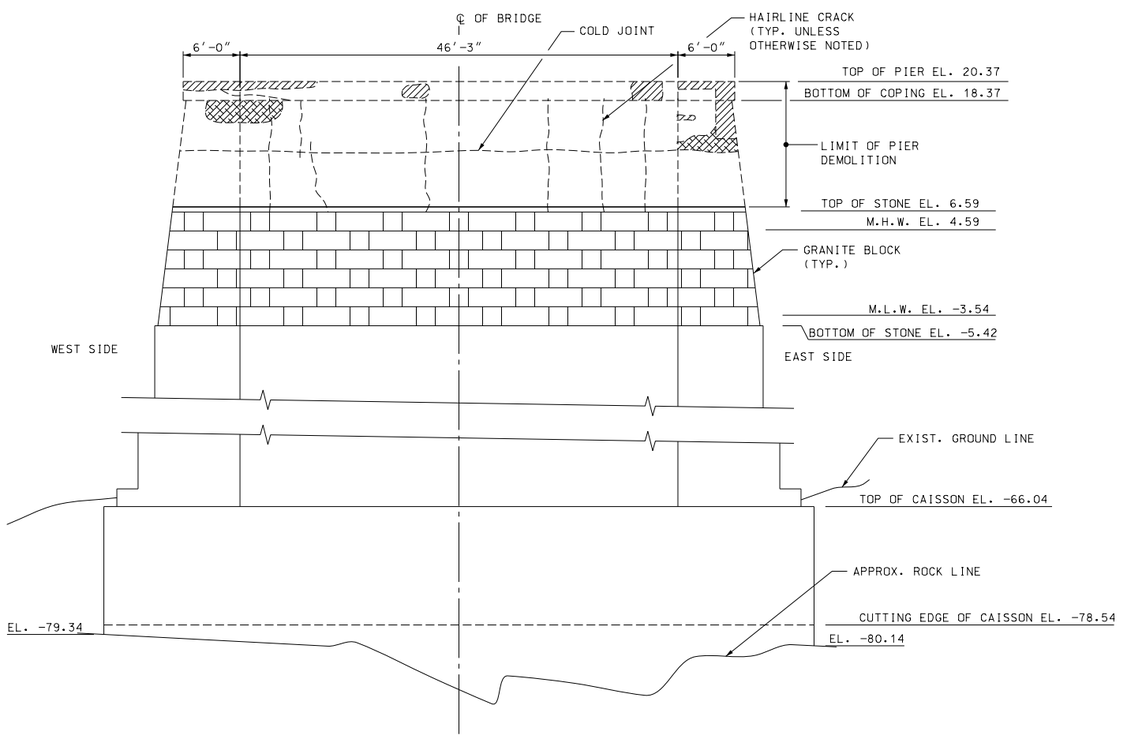

PIER 2 - SOUTH ELEVATION

1/8" = 1'-0"

NOTES:

1. EXISTING FENDER SYSTEM NOT SHOWN FOR CLARITY.
2. FOR PIER RETROFIT PLAN, SEE BRIDGE SHEET B3A.
3. LIMIT OF PIER DEMOLITION IS THE MINIMUN REQUIRED REMOVAL DEPTH TO ALLOW FOR PIER RECONTRUCTION. FINAL REMOVAL LIMITS WILL BE DEPENDANT ON THE ACTUAL CONDITION OF THE EXISTING PIER CONCRETE AS FOUND IN THE FIELD BY THE CONTRACTOR. ALL REMOVALS SHALL BE TO SOUND CONCRETE, AS INDICATED BY THE ENGINEER.
4. ALL DIMENSIONS AND ELEVATIONS SHOWN IN THIS DRAWING ARE BASED ON THE AVAILABLE RECORD DRAWINGS AND SHALL BE VERIFIED BY CONTRACTOR.

Progress Plan
January 27, 2012

ARCHER WESTERN CONTRACTORS

HNTB
HNTB Corporation
The HNTB Companies
Engineers Architects Planners

SUBDIRECTORY	.DGN LOCATOR	SHEET SCALE
	$FILENAME$	1/8" = 1'-0"

STATE OF NEW HAMPSHIRE
DEPARTMENT OF TRANSPORTATION * BUREAU OF BRIDGE DESIGN

TOWN PORTSMOUTH, NH. - KITTERY, ME. BRIDGE NO. 247 \ 084 STATE PROJECT 13678F

LOCATION U.S. ROUTE 1 OVER PISCATAQUA RIVER

PIER 2 - DEMOLITION PLAN AND ELEVATIONS

BRIDGE SHEET B4 OF

FILE NUMBER 107-1-1

REVISIONS AFTER PROPOSAL		BY	DATE		BY	DATE
	DESIGNED	HHW	09/11	CHECKED	JN	09/11
	DRAWN	PRE	09/11	CHECKED	GT	09/11
	QUANTITIES	XX	XX/XX	CHECKED	XX	XX/XX

ISSUE DATE
REV. DATE
FEDERAL PROJECT NO.
SHEET NO.
TOTAL SHEETS

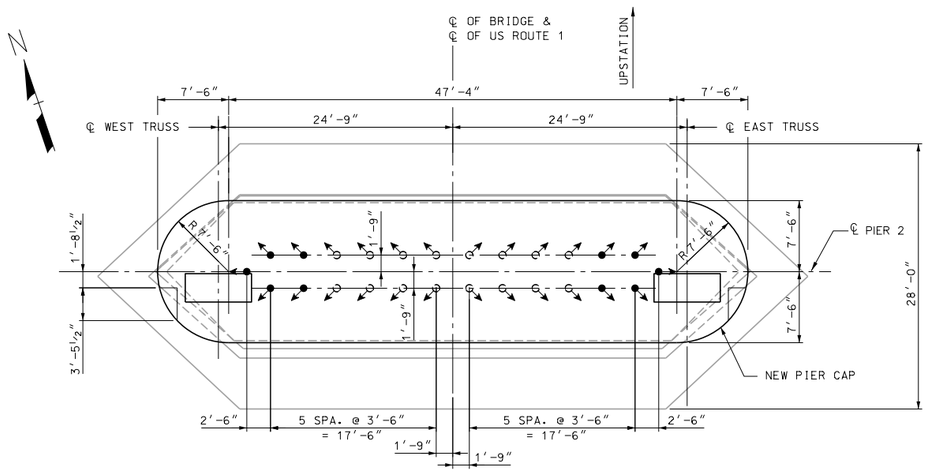

PIER 2 – PLAN

⅛″ = 1′-0″

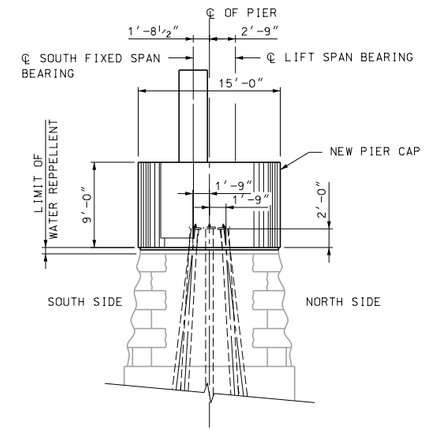

PIER 2 – EAST END ELEVATION

⅛″ = 1′-0″

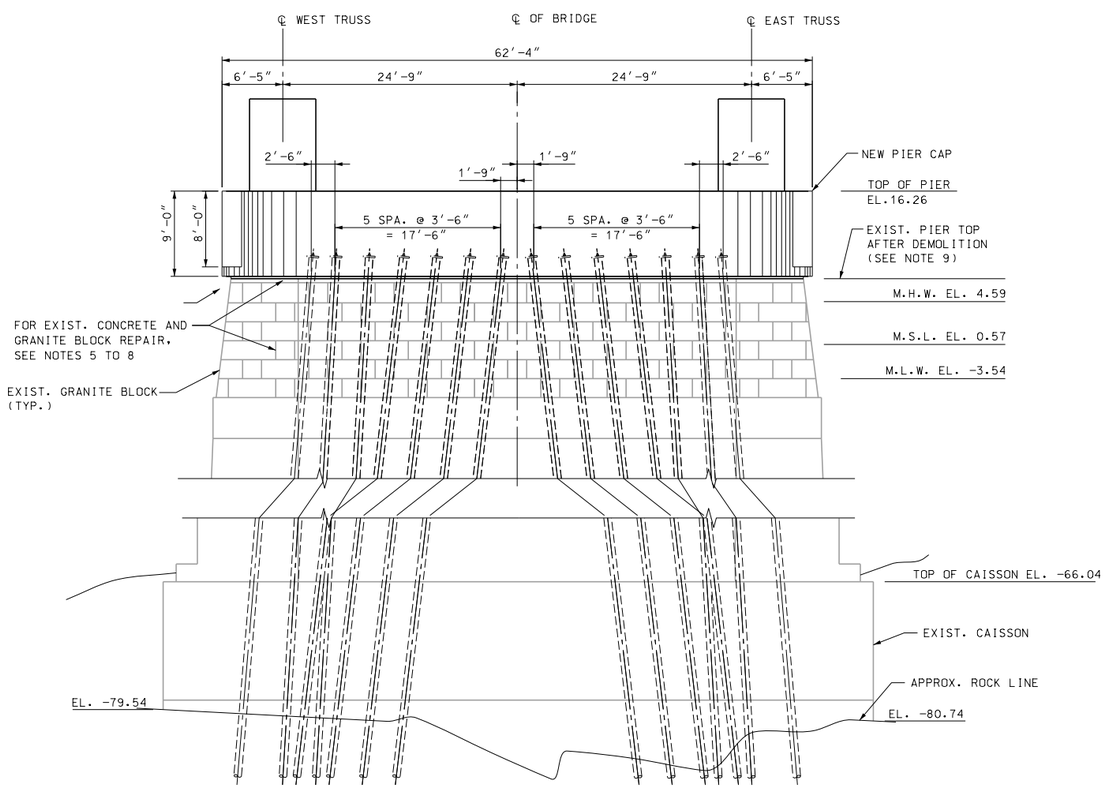

PIER 2 – SOUTH ELEVATION

⅛″ = 1′-0″

LEGEND:

DENOTES BATTERED MICROPILES AND DIRECTION OF BATTER PILE SLOPE 2:12 (2 HORIZONTAL ON 12 VERTICAL)

DENOTES BATTERED MICROPILES AND DIRECTION OF BATTER PILE SLOPE 1:12 (1 HORIZONTAL ON 12 VERTICAL)

NOTES:

1. FOR MICROPILE DETAILS, SEE BRIDGE SHEET B8.
2. FOR MICROPILE ROCK SOCKET LENGTH, SEE BRIDGE SHEET B8.
3. FOR PIER CAP REINFORCEMENT DETAILS, SEE BRIDGE SHEET B4B.
4. FOR LIMITS OF PIER DEMOLITION, SEE BRIDGE SHEET B4.
5. EXISTING PIER CONCRETE ABOVE THE MEAN SEA LEVEL ELEVATION SHALL BE REPAIRED FOR DELAMINATION, SPALL, CRACK AND MAP CRACKING WITH SALT EFFLORESCENCE BEFORE NEW PIER CAP INSTALLATION. MISSING GROUT ON GRANITE BLOCKS SHALL BE REPOINTED. FOR REPAIR DETAILS, SEE BRIDGE SHEET B7.
6. REPAIR LOCATIONS SHALL BE VERIFIED IN THE FIELD DURING CONSTRUCTION. THE ENGINEER SHALL MARK EXACT LIMITS IN THE FIELD.
7. ONLY CRACKS EQUAL TO OR WIDER THAN 1/16″ ARE TO BE REPAIRED.
8. WATER REPELLENT (SILANE-SILOXANE) FOR CONCRETE SHALL BE APPLIED TO ALL FACES OF STRUCTURE WITHIN LIMITS SHOWN AFTER ALL CONCRETE REPAIRS HAVE BEEN MADE.
9. EXISTING CONCRETE SURFACE BELOW NEW CONCRETE PIER CAP SHALL BE CLEANED, FREE OF LAITANCE, AND INTENTIONALLY ROUGHENED TO AN AMPLITUDE OF 0.25 IN. EXISTING CONCRETE SURFACE BELOW NEW CONCRETE PIER CAP SHALL ALSO BE REPAIRED AS INDICATED IN NOTES 5 TO 7.
10. FOR NEW FENDER LAYOUT, SEE BRIDGE SHEET B10.

Progress Plan
January 27, 2012

ARCHER WESTERN CONTRACTORS

HNTB
HNTB Corporation
The HNTB Companies
Engineers Architects Planners

SUBDIRECTORY	.DGN LOCATOR	SHEET SCALE
	$FILENAME$	1/8" = 1'-0"

STATE OF NEW HAMPSHIRE
DEPARTMENT OF TRANSPORTATION * BUREAU OF BRIDGE DESIGN

TOWN PORTSMOUTH, NH. - KITTERY, ME. BRIDGE NO. 247 \ 084 STATE PROJECT 13678F

LOCATION U.S. ROUTE 1 OVER PISCATAQUA RIVER

PIER 2 - RETROFIT PLAN AND ELEVATIONS

REVISIONS AFTER PROPOSAL		BY	DATE		BY	DATE
	DESIGNED	HHW	09/11	CHECKED	JN	09/11
	DRAWN	PRE	09/11	CHECKED	CSE	09/11
	QUANTITIES	XX	XX/XX	CHECKED	XX	XX/XX
	ISSUE DATE		FEDERAL PROJECT NO.		SHEET NO.	
	REV. DATE					

BRIDGE SHEET B4A OF

FILE NUMBER 107-1-1

TOTAL SHEETS

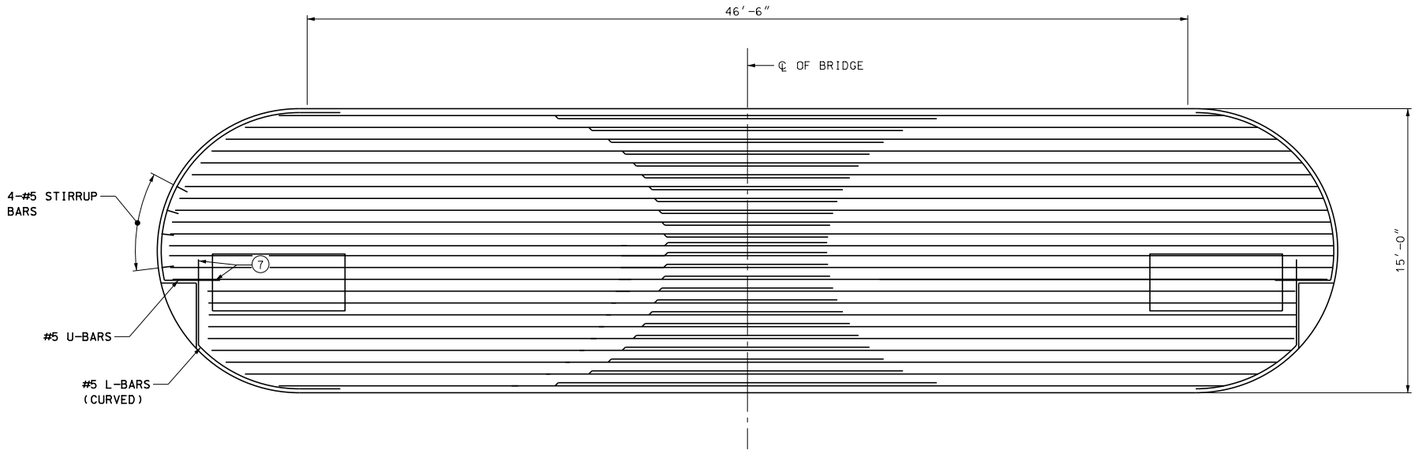

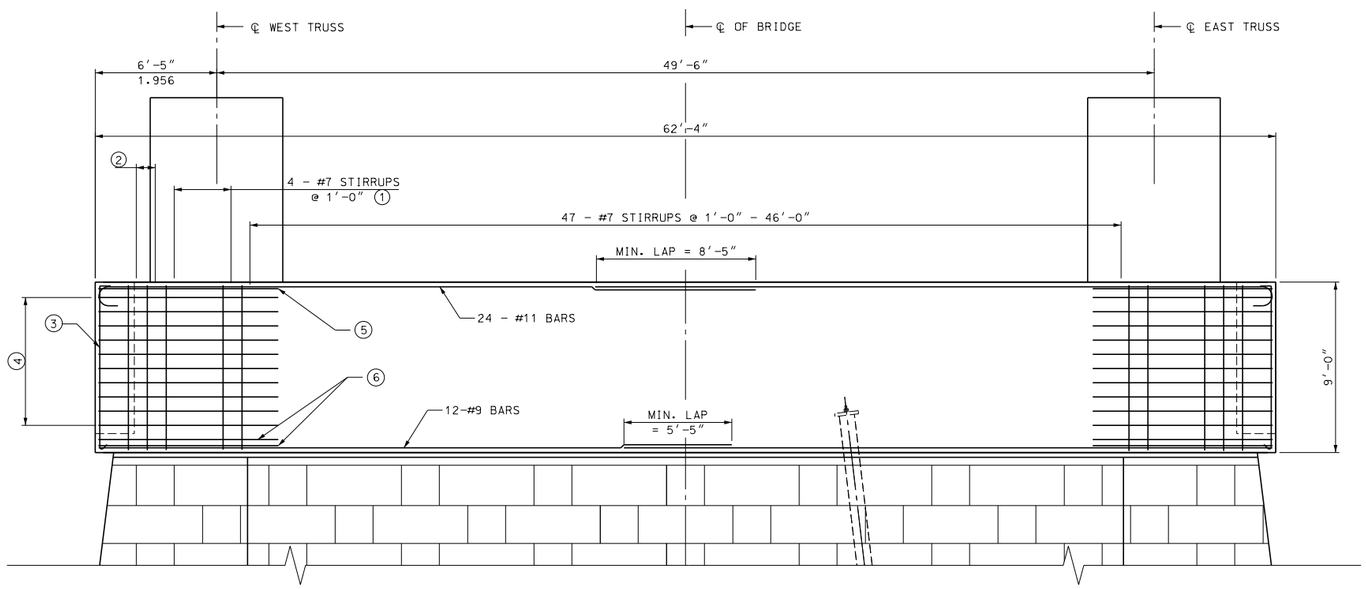

PIER 2 - SOUTH ELEVATION

1/4" = 1'-0"

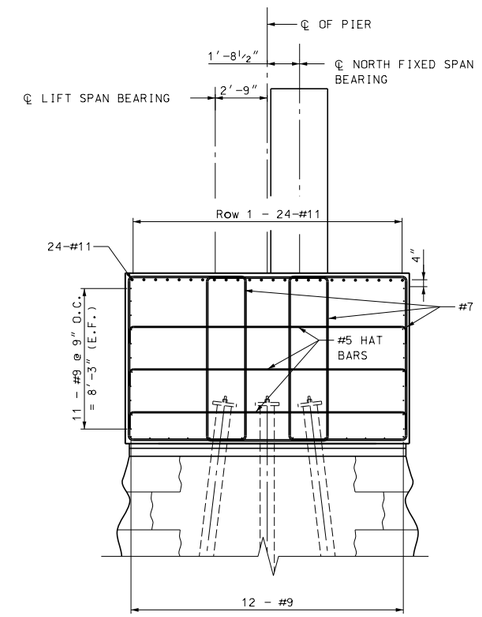

PIER 2 - TYPICAL ELEVATION

1/4" = 1'-0"

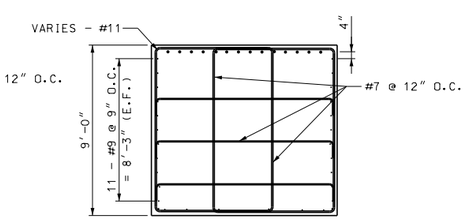

PIER 2 - END ELEVATION

1/4" = 1'-0"

LEGEND:

1. ADJUST #7 STIRRUPS TO FIT
2. 2 - #7 STIRRUPS, SEE "END" SECTION
3. #5 STIRRUP BARS
4. 10 - #5 "U" & "L" BARS @ 9" = 7'-6" (TO MATCH SKIN REINFORCEMENT)
5. 1 - #5 "U" & "L" BAR (TO MATCH LONGITUDINAL CAP STEEL)
6. 1 - #5 "U" BAR TO MATCH SKIN & 1 - #5 "U" BAR TO MATCH BOTTOM (NO NOTCH, FULL "U")
7. 1'-3" EMBEDMENT, TYPICAL

NOTES:

1. SKIN REINFORCEMENT NOT SHOWN FOR CLARITY.

Progress Plan
January 27, 2012

ARCHER WESTERN CONTRACTORS

HNTB
HNTB Corporation
The HNTB Companies
Engineers Architects Planners

SUBDIRECTORY	.DGN LOCATOR	SHEET SCALE
	$FILENAME$	1/4" = 1'-0"

STATE OF NEW HAMPSHIRE
DEPARTMENT OF TRANSPORTATION * BUREAU OF BRIDGE DESIGN

TOWN PORTSMOUTH, NH. - KITTERY, ME. BRIDGE NO. 247 \ 084 STATE PROJECT 13678F

LOCATION U.S. ROUTE 1 OVER PISCATAQUA RIVER

PIER 2 - PIER CAP REINFORCEMNT DETAILS

REVISIONS AFTER PROPOSAL		BY	DATE		BY	DATE
	DESIGNED	XXX	09/11	CHECKED	XXX	09/11
	DRAWN	LR	09/11	CHECKED	JN	09/11
	QUANTITIES	XX	XX/XX	CHECKED	XX	XX/XX
	ISSUE DATE		FEDERAL PROJECT NO.		SHEET NO.	
	REV. DATE					

BRIDGE SHEET B4B OF

FILE NUMBER 107-1-1

TOTAL SHEETS

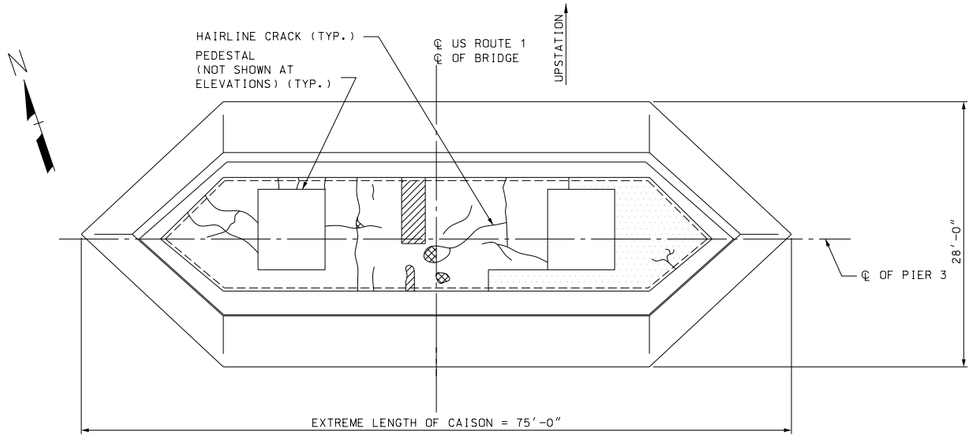

PIER 3 – PLAN

1/8" = 1'-0"

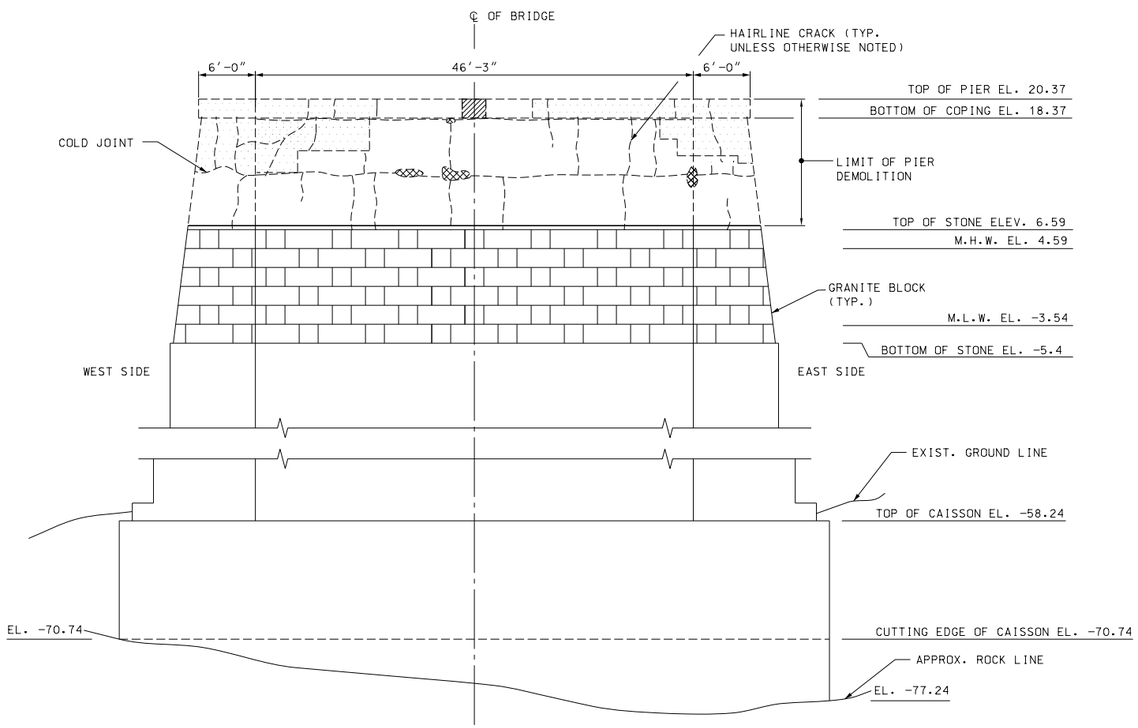

PIER 3 – SOUTH ELEVATION

1/8" = 1'-0"

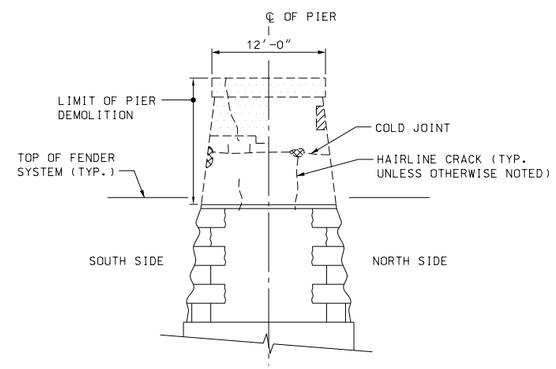

PIER 3 – EAST END ELEVATION

1/8" = 1'-0"

LEGEND:

- AREA OF CONCRETE DELAMINATION
- AREA OF CONCRETE SPALL
- AREA OF MAP CRACKING WITH SALT EFFLORESCENCE
- AREA OF SALT EFFLORESCENCE
- AREA OF PREVIOUS CONCRETE REPAIR

NOTES:

1. EXISTING FENDER SYSTEM NOT SHOWN FOR CLARITY.
2. FOR PIER RETROFIT PLAN, SEE BRIDGE SHEET B5A.
3. LIMIT OF PIER DEMOLITION IS THE MINIMUN REQUIRED REMOVAL DEPTH TO ALLOW FOR PIER RECONTRUCTION. FINAL REMOVAL LIMITS WILL BE DEPENDANT ON THE ACTUAL CONDITION OF THE EXISTING PIER CONCRETE AS FOUND IN THE FIELD BY THE CONTRACTOR. ALL REMOVALS SHALL BE TO SOUND CONCRETE, AS INDICATED BY THE ENGINEER.
4. ALL DIMENSIONS AND ELEVATIONS SHOWN IN THIS DRAWING ARE BASED ON THE AVAILABLE RECORD DRAWINGS AND SHALL BE VERIFIED BY CONTRACTOR.

Progress Plan
January 27, 2012

ARCHER WESTERN CONTRACTORS

HNTB
HNTB Corporation
The HNTB Companies
Engineers Architects Planners

STATE OF NEW HAMPSHIRE
DEPARTMENT OF TRANSPORTATION * BUREAU OF BRIDGE DESIGN

TOWN PORTSMOUTH, NH. - KITTERY, ME. BRIDGE NO. 247 \ 084 STATE PROJECT 13678F

LOCATION U.S. ROUTE 1 OVER PISCATAQUA RIVER

PIER 3 - DEMOLITION PLAN AND ELEVATIONS

BRIDGE SHEET B5 OF

FILE NUMBER 107-1-1

REVISIONS AFTER PROPOSAL		BY	DATE		BY	DATE
	DESIGNED	HHW	09/11	CHECKED	JN	09/11
	DRAWN	PRE	09/11	CHECKED	GT	09/11
	QUANTITIES	XX	XX/XX	CHECKED	XX	XX/XX
	ISSUE DATE		FEDERAL PROJECT NO.		SHEET NO.	TOTAL SHEETS
	REV. DATE					

SUBDIRECTORY	.DGN LOCATOR	SHEET SCALE
	$FILENAME$	1/8" = 1'-0"

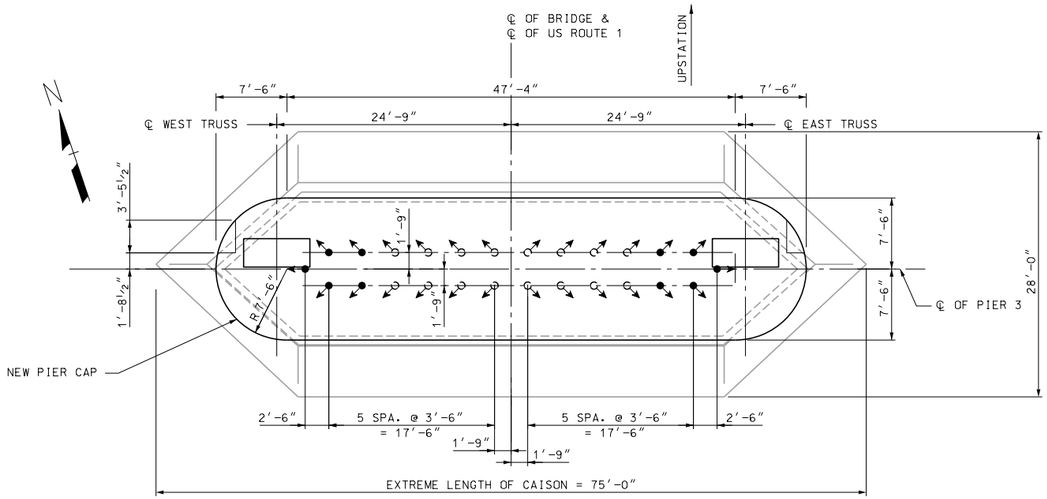

PIER 3 – PLAN

⅛″ = 1′-0″

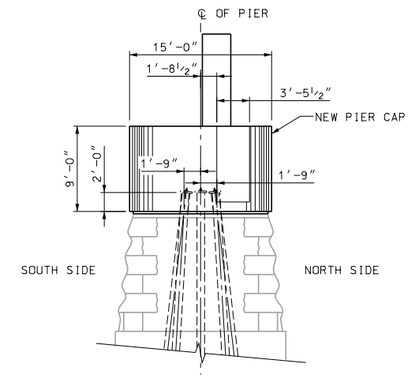

PIER 3 – EAST END ELEVATION

⅛″ = 1′-0″

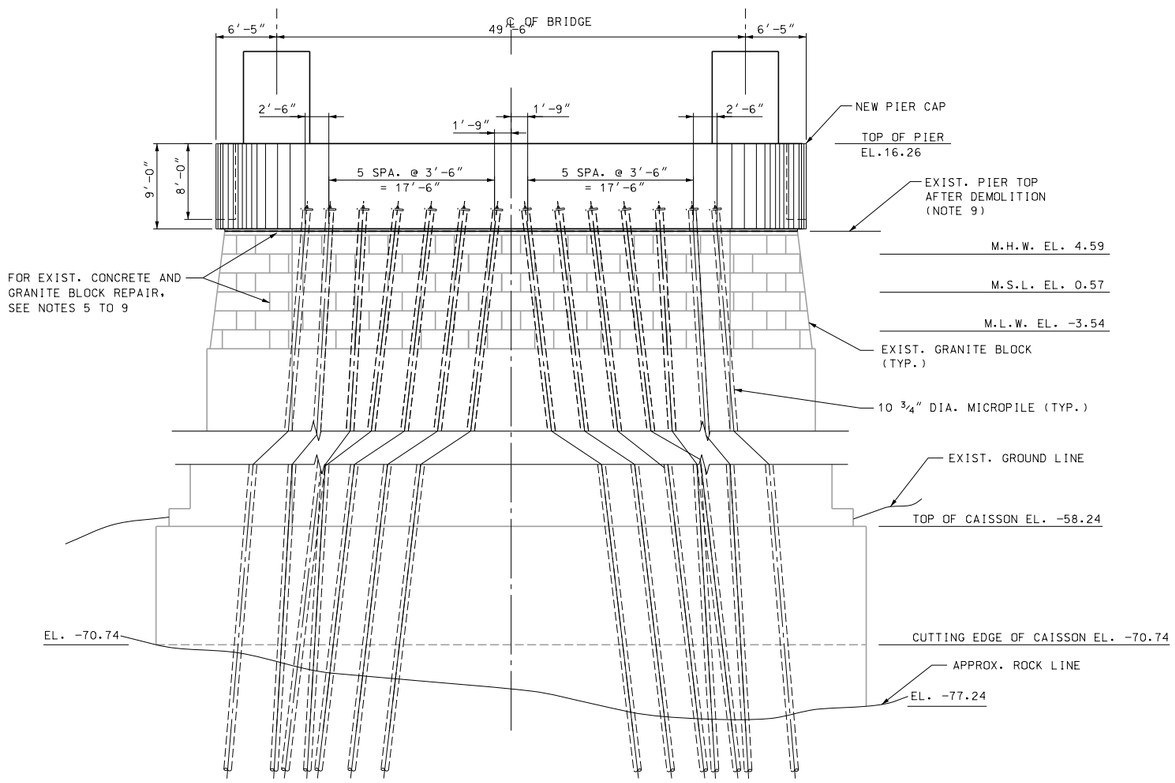

PIER 3 – SOUTH ELEVATION

⅛″ = 1′-0″

LEGEND:

- AREA OF CONCRETE DELAMINATION
- AREA OF CONCRETE SPALL
- AREA OF MAP CRACKING WITH SALT EFFLORESCENCE
- AREA OF SALT EFFLORESCENCE
- AREA OF PREVIOUS CONCRETE REPAIR

LEGEND:

DENOTES BATTERED MICROPILES AND DIRECTION OF BATTER PILE SLOPE 2:12 (2 HORIZONTAL ON 12 VERTICAL)

DENOTES BATTERED MICROPILES AND DIRECTION OF BATTER PILE SLOPE 1:12 (1 HORIZONTAL ON 12 VERTICAL)

NOTES:

1. FOR MICROPILE DETAILS, SEE BRIDGE SHEET B8.
2. FOR MICROPILE ROCK SOCKET LENGTH SEE BRIDGE SHEET B8.
3. FOR PIER CAP REINFORCEMENT DETAILS, SEE BRIDGE SHEET B5B.
4. FOR LIMITS OF PIER DEMOLITION, SEE BRIDGE SHEET B5.
5. EXISTING PIER CONCRETE ABOVE THE MEAN SEA LEVEL ELEVATION SHALL BE REPAIRED FOR DELAMINATION, SPALL, CRACK AND MAP CRACKING WITH SALT EFFLORESCENCE BEFORE NEW PIER CAP INSTALLATION. MISSING GROUT ON GRANITE BLOCKS SHALL BE REPOINTED. FOR REPAIR DETAILS, SEE BRIDGE SHEET B7.
6. REPAIR LOCATIONS SHALL BE VERIFIED IN THE FIELD DURING CONSTRUCTION. THE ENGINEER SHALL MARK EXACT LIMITS IN THE FIELD.
7. ONLY CRACKS EQUAL TO OR WIDER THAN 1/16″ ARE TO BE REPAIRED.
8. WATER REPELLENT (SILANE-SILOXANE) FOR CONCRETE SHALL BE APPLIED TO ALL FACES OF STRUCTURE WITHIN LIMITS SHOWN AFTER ALL CONCRETE REPAIRS HAVE BEEN MADE.
9. EXISTING CONCRETE SURFACE BELOW NEW CONCRETE PIER CAP SHALL BE CLEANED, FREE OF LAITANCE, AND INTENTIONALLY ROUGHENED TO AN AMPLITUDE OF 0.25 IN. EXISTING CONCRETE SURFACE BELOW NEW CONCRETE PIER CAP SHALL ALSO BE REPAIRED AS INDICATED IN NOTES 5 TO 7.
10. FOR NEW FENDER LAYOUT, SEE BRIDGE SHEET B10.

Progress Plan
January 27, 2012

ARCHER WESTERN CONTRACTORS

HNTB
HNTB Corporation
The HNTB Companies
Engineers Architects Planners

STATE OF NEW HAMPSHIRE
DEPARTMENT OF TRANSPORTATION * BUREAU OF BRIDGE DESIGN

TOWN PORTSMOUTH, NH. - KITTERY, ME. BRIDGE NO. 247 \ 084 STATE PROJECT 13678F

LOCATION U.S. ROUTE 1 OVER PISCATAQUA RIVER

PIER 3 - RETROFIT PLAN AND ELEVATIONS

BRIDGE SHEET B5A OF

FILE NUMBER 107-1-1

REVISIONS AFTER PROPOSAL		BY	DATE		BY	DATE
	DESIGNED	HHW	09/11	CHECKED	JN	09/11
	DRAWN	SPL	09/11	CHECKED	GT	09/11
	QUANTITIES	XX	XX/XX	CHECKED	XX	XX/XX
	ISSUE DATE			FEDERAL PROJECT NO.	SHEET NO.	TOTAL SHEETS
	REV. DATE					

SUBDIRECTORY	.DGN LOCATOR	SHEET SCALE
	$FILENAME$	1/8" = 1'-0"

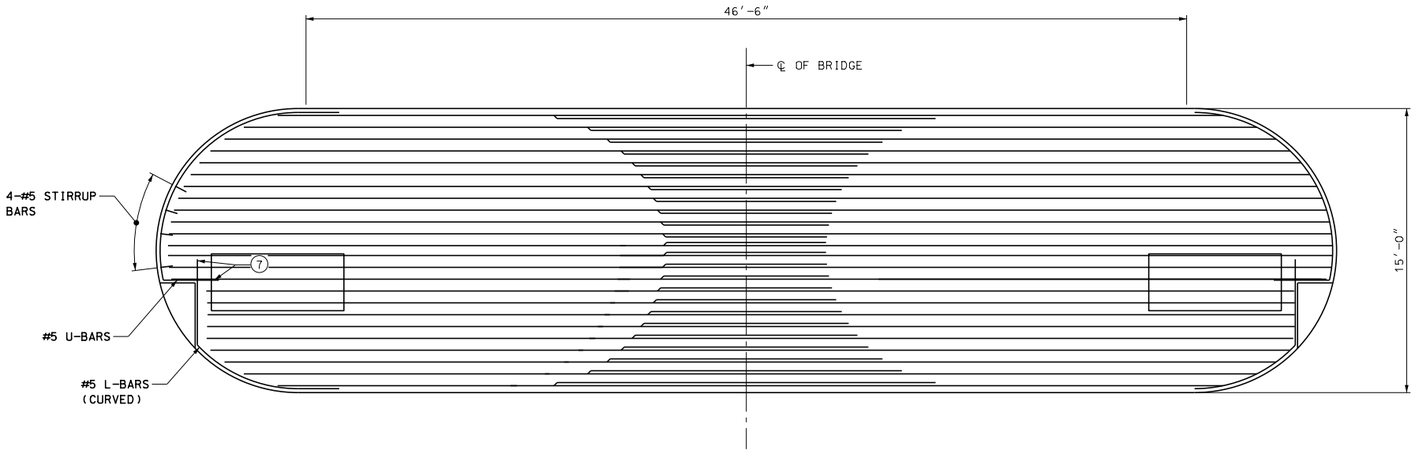

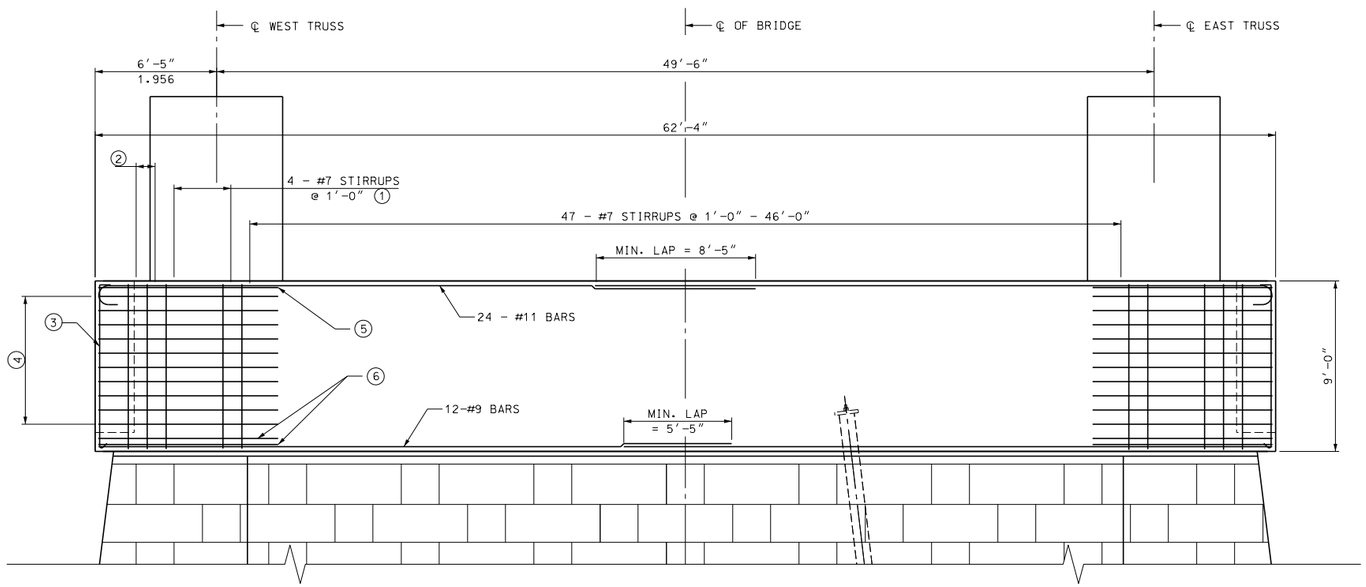

PIER 3 - SOUTH ELEVATION

1/4″ = 1′-0″

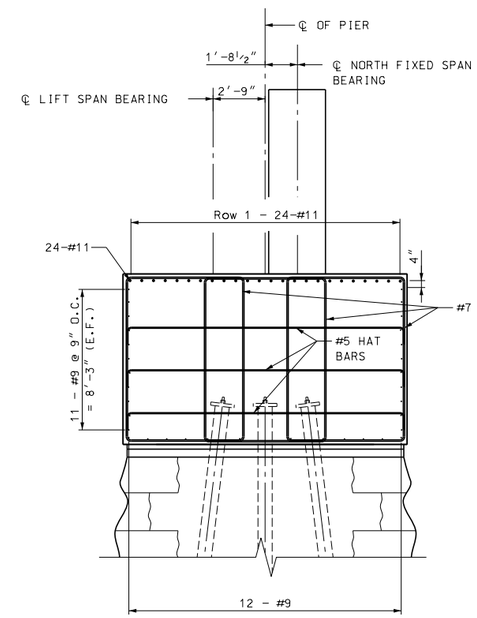

PIER 3 - TYPICAL ELEVATION

1/4″ = 1′-0″

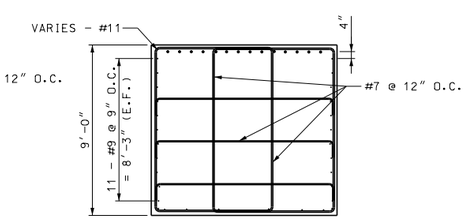

PIER 3 - END ELEVATION

1/4″ = 1′-0″

LEGEND:

1. ADJUST #7 STIRRUPS TO FIT
2. 2 - #7 STIRRUPS, SEE "END" SECTION
3. #5 STIRRUP BARS
4. 10 - #5 "U" & "L" BARS @ 9″ = 7′-6″ (TO MATCH SKIN REINFORCEMENT)
5. 1 - #5 "U" & "L" BAR (TO MATCH LONGITUDINAL CAP STEEL)
6. 1 - #5 "U" BAR TO MATCH SKIN & 1 - #5 "U" BAR TO MATCH BOTTOM (NO NOTCH, FULL "U")
7. 1′-3″ EMBEDMENT, TYPICAL

NOTES:

1. SKIN REINFORCEMENT NOT SHOWN FOR CLARITY.

Progress Plan
January 27, 2012

ARCHER WESTERN CONTRACTORS

HNTB
HNTB Corporation
The HNTB Companies
Engineers Architects Planners

SUBDIRECTORY	.DGN LOCATOR	SHEET SCALE
	$FILENAME$	1/4" = 1'-0"

STATE OF NEW HAMPSHIRE
DEPARTMENT OF TRANSPORTATION * BUREAU OF BRIDGE DESIGN

TOWN PORTSMOUTH, NH. - KITTERY, ME. BRIDGE NO. 247 \ 084 STATE PROJECT 13678F

LOCATION U.S. ROUTE 1 OVER PISCATAQUA RIVER

PIER 3 - PIER CAP REINFORCMENT DETAILS

REVISIONS AFTER PROPOSAL		BY	DATE		BY	DATE
	DESIGNED	XXX	09/11	CHECKED	XXX	09/11
	DRAWN	LR	09/11	CHECKED	JN	09/11
	QUANTITIES	XX	XX/XX	CHECKED	XX	XX/XX
	ISSUE DATE		FEDERAL PROJECT NO.		SHEET NO.	
	REV. DATE					

BRIDGE SHEET B5B OF

FILE NUMBER 107-1-1

TOTAL SHEETS

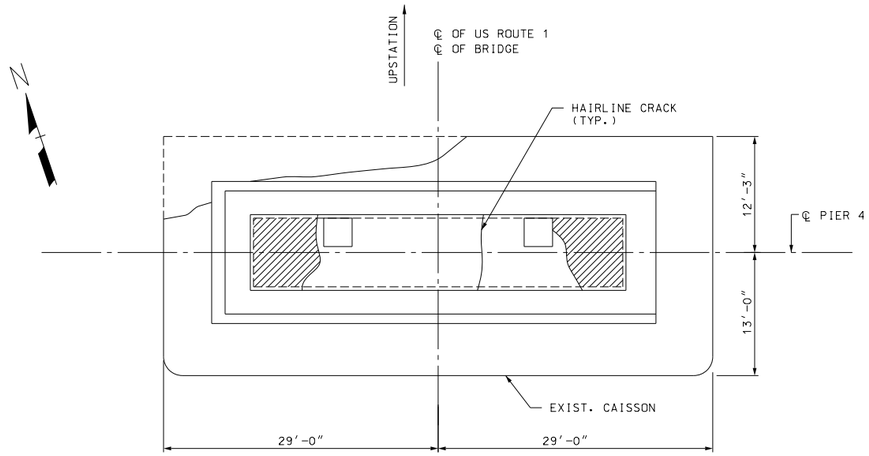

PIER 4 – PLAN

1/8" = 1'-0"

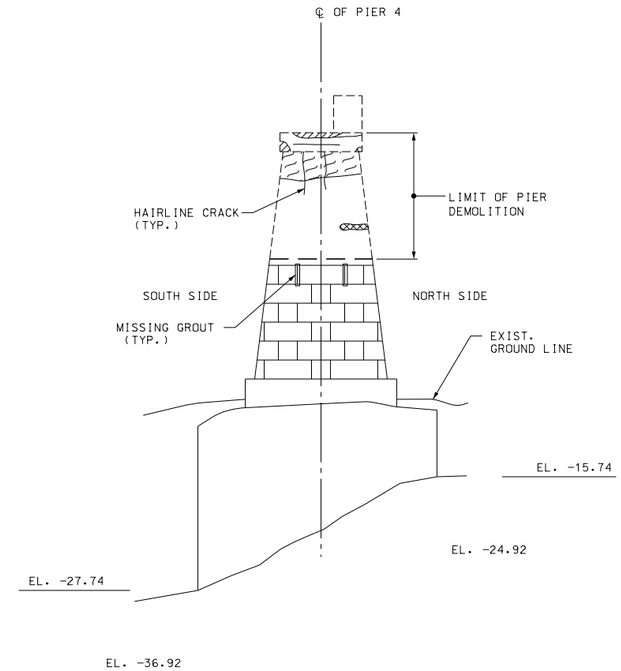

PIER 4 – EAST END ELEVATION

1/8" = 1'-0"

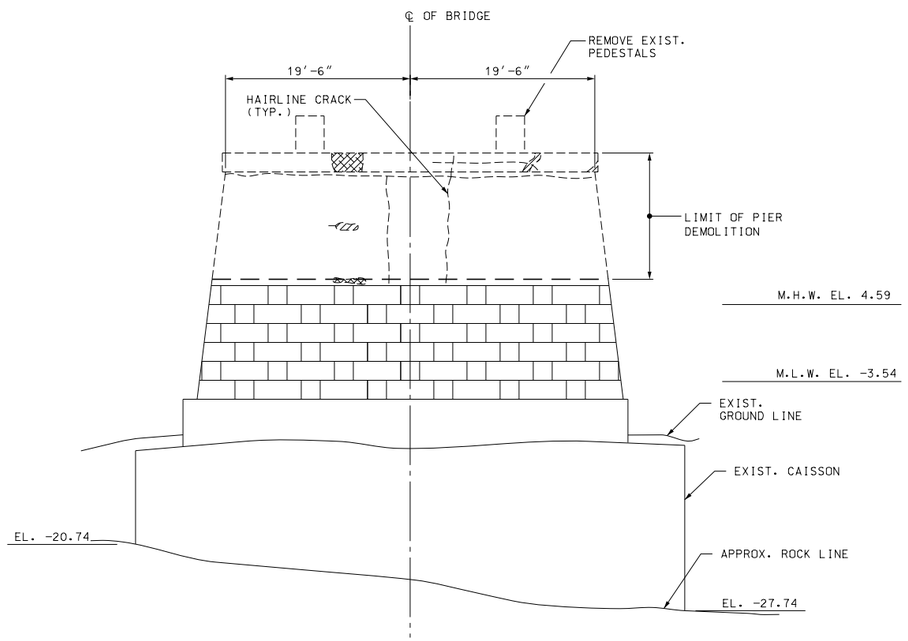

PIER 4 – SOUTH ELEVATION

1/8" = 1'-0"

LEGEND:

- AREA OF CONCRETE DELAMINATION
- AREA OF CONCRETE SPALL
- AREA OF MAP CRACKING WITH SALT EFFLORESCENCE
- AREA OF SALT EFFLORESCENCE
- AREA OF PREVIOUS CONCRETE REPAIR

NOTES:

1. FOR PIER RETROFIT PLAN, SEE BRIDGE SHEET B6A.
2. LIMIT OF PIER DEMOLITION IS THE MINIMUN REQUIRED REMOVAL DEPTH TO ALLOW FOR PIER RECONTRUCTION. FINAL REMOVAL LIMITS WILL BE DEPENDANT ON THE ACTUAL CONDITION OF THE EXISTING PIER CONCRETE AS FOUND IN THE FIELD BY THE CONTRACTOR. ALL REMOVALS SHALL BE TO SOUND CONCRETE, AS INDICATED BY THE ENGINEER.
3. ALL DIMENSIONS AND ELEVATIONS SHOWN IN THIS DRAWING ARE BASED ON THE AVAILABLE RECORD DRAWINGS AND SHALL BE VERIFIED BY CONTRACTOR.

Progress Plan
January 27, 2012

ARCHER WESTERN CONTRACTORS

HNTB
HNTB Corporation
The HNTB Companies
Engineers Architects Planners

STATE OF NEW HAMPSHIRE
DEPARTMENT OF TRANSPORTATION * BUREAU OF BRIDGE DESIGN

TOWN PORTSMOUTH, NH. - KITTERY, ME. BRIDGE NO. 247 \ 084 STATE PROJECT 13678F

LOCATION U.S. ROUTE 1 OVER PISCATAQUA RIVER

PIER 4 - DEMOLITION PLAN AND ELEVATIONS

BRIDGE SHEET B6 OF

FILE NUMBER 107-1-1

REVISIONS AFTER PROPOSAL		BY	DATE		BY	DATE
	DESIGNED	HHW	09/11	CHECKED	JN	09/11
	DRAWN	PRE	09/11	CHECKED	GT	09/11
	QUANTITIES	XX	XX/XX	CHECKED	XX	XX/XX
	ISSUE DATE		FEDERAL PROJECT NO.		SHEET NO.	TOTAL SHEETS
	REV. DATE					

SUBDIRECTORY	.DGN LOCATOR	SHEET SCALE
	$FILENAME$	1/8" = 1'-0"

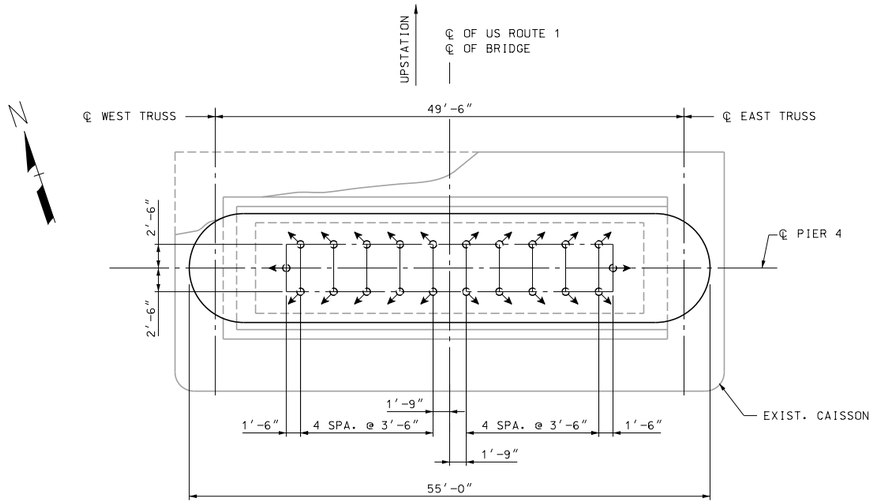

PIER 4 – PLAN

1/8″ = 1′-0″

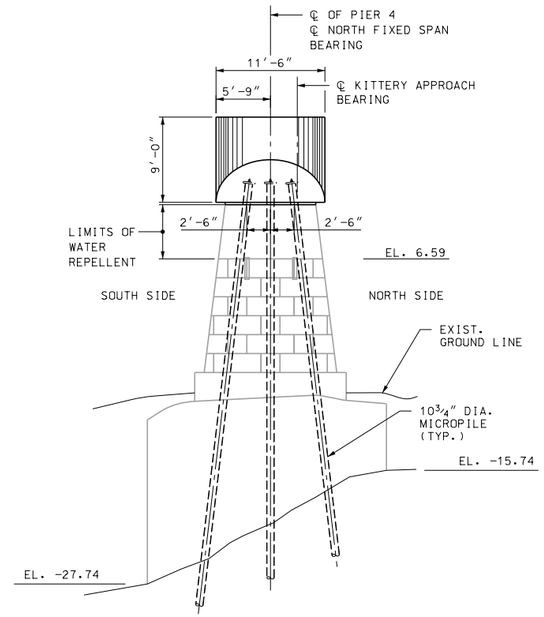

PIER 4 – EAST END ELEVATION

1/8″ = 1′-0″

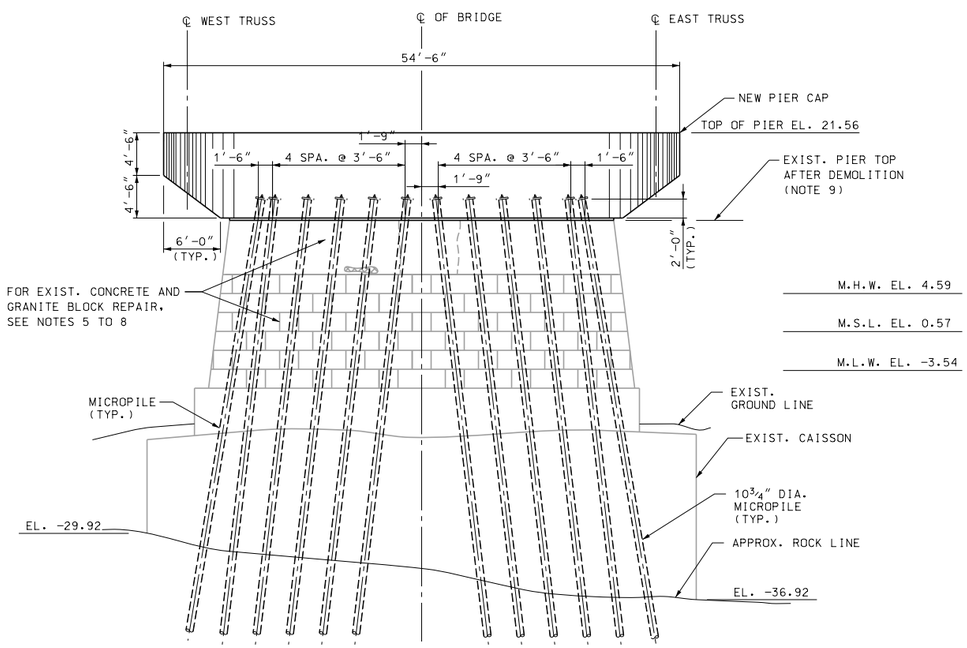

PIER 4 – SOUTH ELEVATION

1/8″ = 1′-0″

LEGEND:

DENOTES BATTERED MICROPILES AND DIRECTION OF BATTER PILE SLOPE 2:12 (2 HORIZONTAL ON 12 VERTICAL)

NOTES:

1. FOR MICROPILE DETAILS, SEE BRIDGE SHEET B8.
2. FOR MICROPILE ROCK SOCKET LENGTH, SEE BRIDGE SHEET B8.
3. FOR PIER CAP REINFORCEMENT DETAILS, SEE BRIDGE SHEET BGB.
4. FOR LIMITS OF PIER DEMOLITION, SEE BRIDGE SHEET BG.
5. EXISTING PIER CONCRETE ABOVE THE MEAN SEA LEVEL ELEVATION SHALL BE REPAIRED FOR DELAMINATION, SPALL, CRACK AND MAP CRACKING WITH SALT EFFLORESCENCE BEFORE NEW PIER CAP INSTALLATION. MISSING GROUT ON GRANITE BLOCKS SHALL BE REPOINTED. FOR REPAIR DETAILS, SEE BRIDGE SHEET B7.
6. REPAIR LOCATIONS SHALL BE VERIFIED IN THE FIELD DURING CONSTRUCTION. THE ENGINEER SHALL MARK EXACT LIMITS IN THE FIELD.
7. ONLY CRACKS EQUAL TO OR WIDER THAN 1/16″ ARE TO BE REPAIRED.
8. WATER REPELLENT (SILANE-SILOXANE) FOR CONCRETE SHALL BE APPLIED TO ALL FACES OF STRUCTURE WITHIN LIMITS SHOWN AFTER ALL CONCRETE REPAIRS HAVE BEEN MADE.
9. EXISTING CONCRETE SURFACE BELOW NEW CONCRETE PIER CAP SHALL BE CLEANED, FREE OF LAITANCE, AND INTENTIONALLY ROUGHENED TO AN AMPLITUDE OF 0.25 IN. EXISTING CONCRETE SURFACE BELOW NEW CONCRETE PIER CAP SHALL ALSO BE REPAIRED AS INDICATED IN NOTES 5 TO 7.

Progress Plan
January 27, 2012

ARCHER WESTERN CONTRACTORS

HNTB
HNTB Corporation
The HNTB Companies
Engineers Architects Planners

SUBDIRECTORY	.DGN LOCATOR	SHEET SCALE
	$FILENAME$	1/8" = 1'-0"

STATE OF NEW HAMPSHIRE
DEPARTMENT OF TRANSPORTATION * BUREAU OF BRIDGE DESIGN

TOWN PORTSMOUTH, NH. - KITTERY, ME. BRIDGE NO. 247 \ 084 STATE PROJECT 13678F

LOCATION U.S. ROUTE 1 OVER PISCATAQUA RIVER

PIER 4 - RETROFIT PLAN AND ELEVATIONS

BRIDGE SHEET B6A OF

FILE NUMBER 107-1-1

REVISIONS AFTER PROPOSAL		BY	DATE		BY	DATE
	DESIGNED	HHW	09/11	CHECKED	JN	09/11
	DRAWN	PRE	09/11	CHECKED	GT	09/11
	QUANTITIES	XX	XX/XX	CHECKED	XX	XX/XX

ISSUE DATE | FEDERAL PROJECT NO. | SHEET NO. | TOTAL SHEETS

REV. DATE

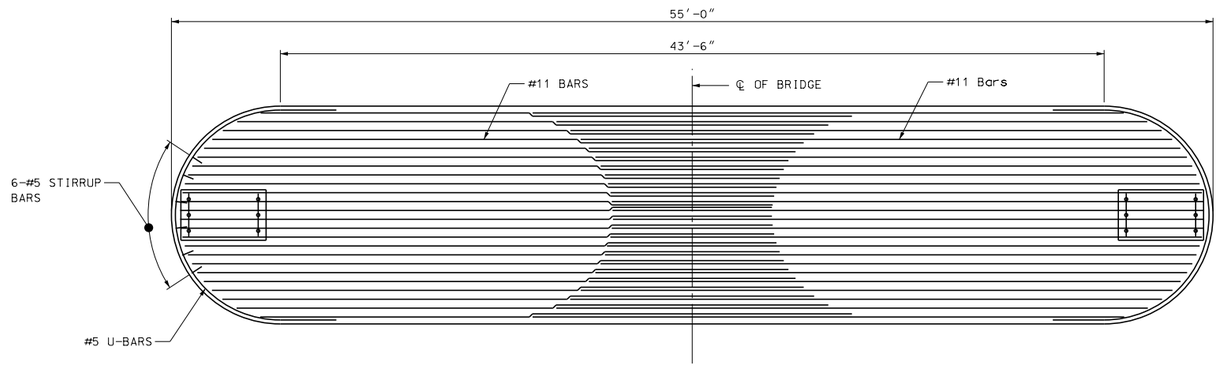

PIER 4 - SOUTH PLAN

1/4" = 1'-0"

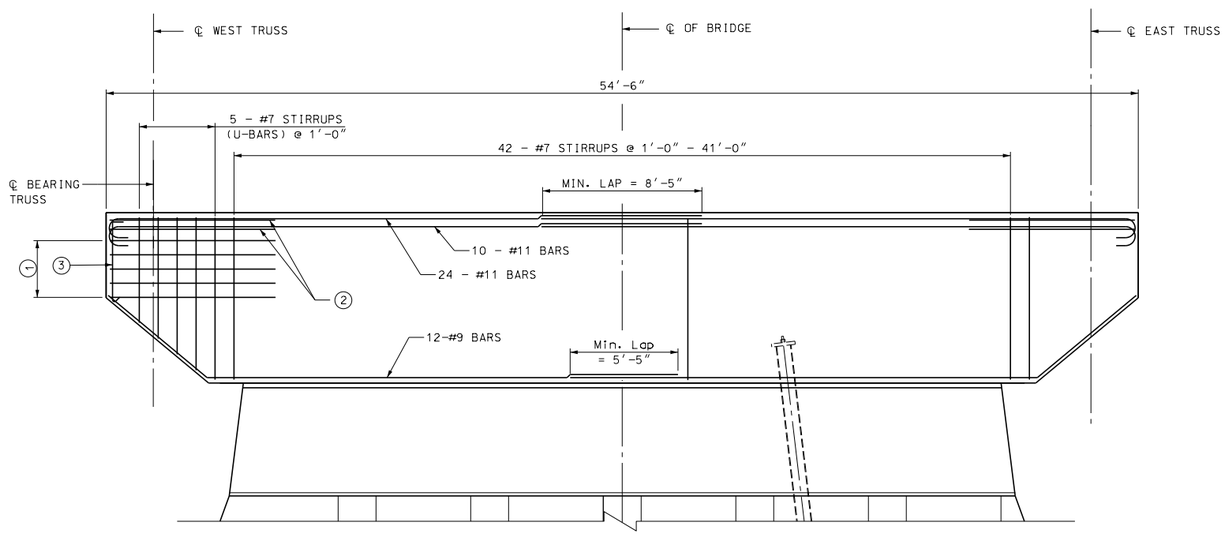

PIER 1 - SOUTH ELEVATION

1/4" = 1'-0"

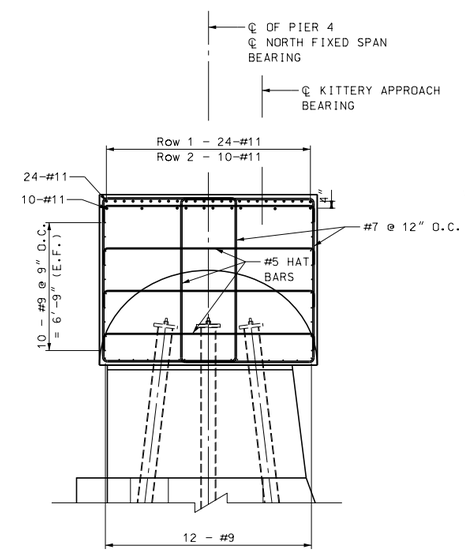

PIER 1 - TYPICAL ELEVATION

1/4" = 1'-0"

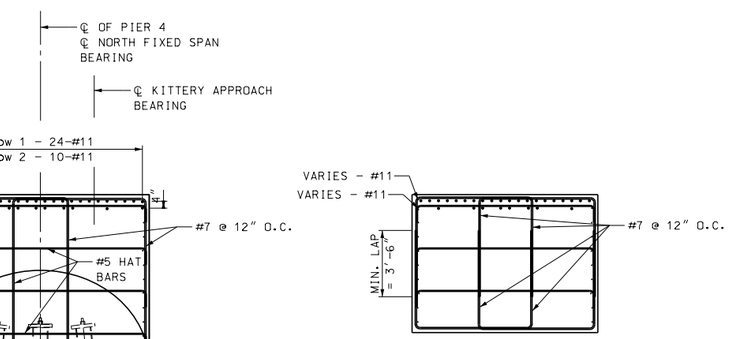

PIER 1 - CURVED END ELEVATION

1/4" = 1'-0"

LEGEND:

1. 5 - #5 "U" BARS @ 9" = 3'-0" (TO MATCH SKIN REINFORCEMENT)
2. 2 - #5 "U" BARS (TO MATCH LONGITUDINAL CAP STEEL)
3. #5 STIRRUP BARS

NOTES:

1. BOTTOM #9 BARS TO BE BENT, AND CUT TO FIT @ CAP END.
2. SKIN REINFORCEMENT NOT SHOWN FOR CLARIFY.

Progress Plan
January 27, 2012

ARCHER WESTERN CONTRACTORS

HNTB
HNTB Corporation
The HNTB Companies
Engineers Architects Planners

SUBDIRECTORY	.DGN LOCATOR	SHEET SCALE
	$FILENAME$	1/4" = 1'-0"

STATE OF NEW HAMPSHIRE
DEPARTMENT OF TRANSPORTATION * BUREAU OF BRIDGE DESIGN

TOWN PORTSMOUTH, NH. - KITTERY, ME. BRIDGE NO. 247 \ 084 STATE PROJECT 13678F

LOCATION U.S. ROUTE 1 OVER PISCATAQUA RIVER

PIER 4 - PIER CAP REINFORCEMENT DETAILS

BRIDGE SHEET B6B OF

FILE NUMBER 107-1-1

REVISIONS AFTER PROPOSAL		BY	DATE		BY	DATE
	DESIGNED	XXX	09/11	CHECKED	XXX	09/11
	DRAWN	PRE	09/11	CHECKED	JN	09/11
	QUANTITIES	XX	XX/XX	CHECKED	XX	XX/XX
	ISSUE DATE		FEDERAL PROJECT NO.		SHEET NO.	TOTAL SHEETS
	REV. DATE					

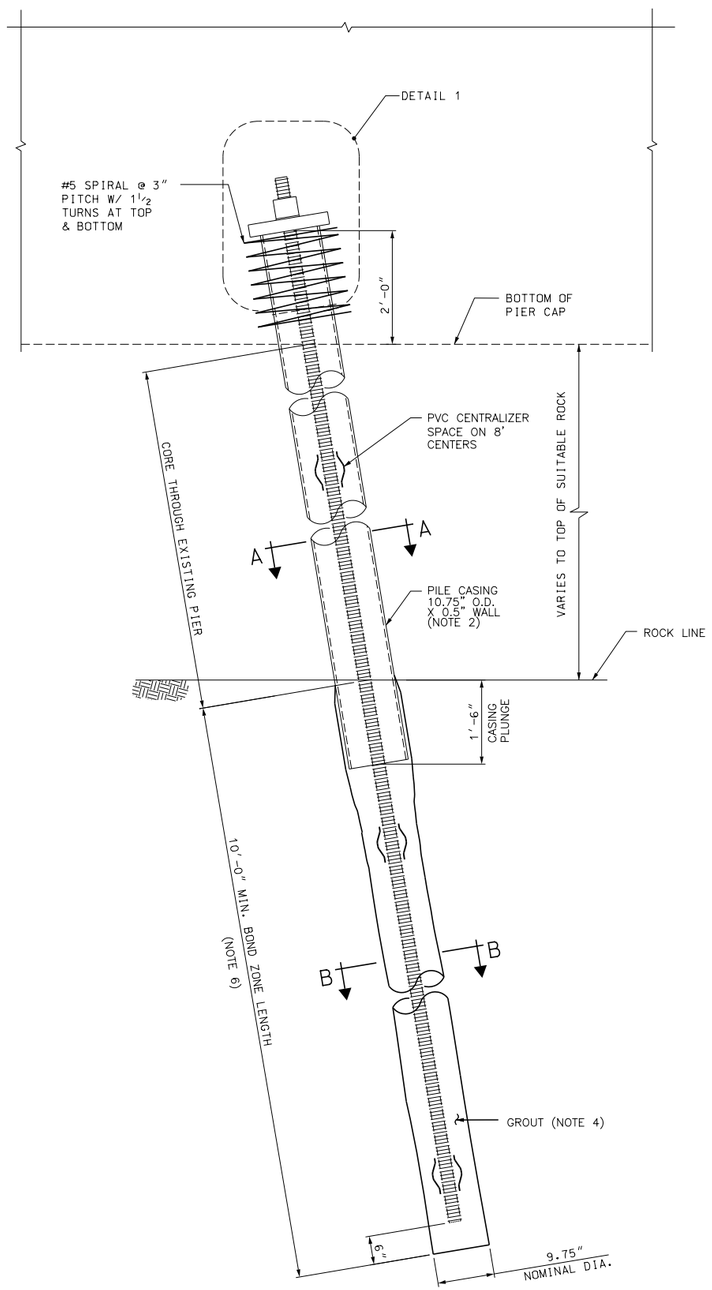

MICROPILE ELEVATION

N.T.S.

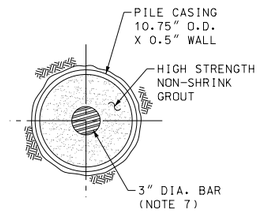

SECTION A-A

(CASED ZONE)

1½" = 1'-0"

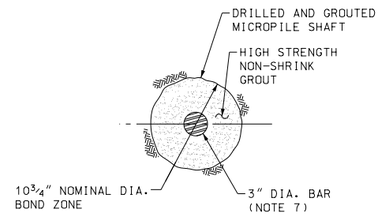

SECTION B-B

(BOND ZONE)

1½" = 1'-0"

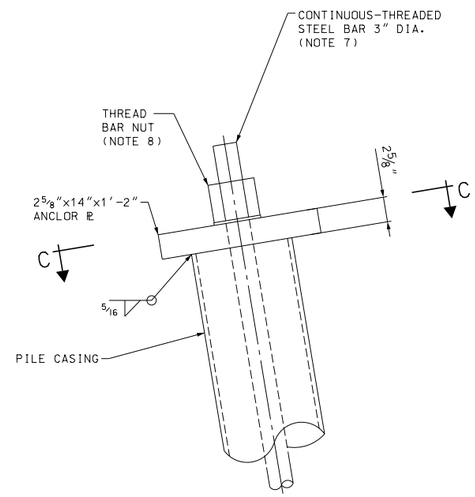

ELEVATION

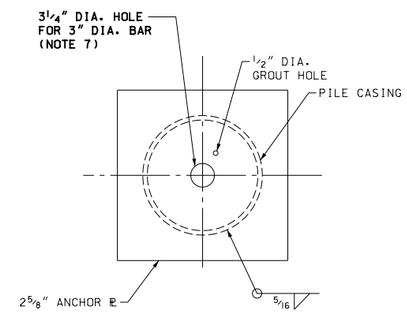

SECTION C-C

DETAIL 1

1½" = 1'-0"

SUGGESTED MICROPILE INSTALLATION PROCEDURE

(THE MICROPILE INSTALLATION PROCEDURE INDICATED IS SUGGESTED ONLY, AND IF UTILIZED BY THE CONTRACTOR, SHALL BE VERIFIED FOR ITS ACCURACY AND APPLICABILITY BY THE CONTRACTOR.)

1. SECURE AREA FOR WORK AND SURVEY LOCATIONS FOR PILLING INSTALLATION
2. ADVANCE 10.75 INCH OUTSIDE DIAMETER CASING TO FULL PILE DEPTH REQUIRED (10 FEET MINIMUM INTO ROCK UTILIZING ROTARY DRILLING TECHNIQUES.
3. TREMIE CASING FULL WIDTH NEAT CEMENT GROUT.
4. PLACING 3 INCH DIAMETER THREADED BAR WITH CENTRALIZERS.
5. REATTACH DRILL HEAD TO THE TOP OF THE CASING AND PRESSURE GROUT THE 10 FEET-LONG PILE BOND LENGTH BY PUMPING NEAT CEMENT GROUT UNDER PRESSURE WHILE EXTRACTING CASING. MINIMUM GROUT PRESSURE SHOULD BE 50 PSI.
6. UPON COMPLETION OF PRESSURE GROUTING, REINSERT THE CASING 1.5 FEET INTO THE TOP OF THE BOND LENGTH.
7. TRIM TOP OF CASING TO ITS PROPER ELEVATION, AND WELD THE TOP BEARING PLATE.
8. THE QUALITY OF THE GROUT SHALL BE MONITORED BY COLLECTION GROUT CUBES FOR LATER COMPRESSION TESTING AND BY MEASURING THE GROUT SPECIFIC GRAVITY FROM ONE BATCH PER DAY.
9. CONSISTENCY OF PILE INSTALLATION SHALL BE MONITORED AND RECORDED AS DESCRIBED IN THE PILE INSTALLATION QUALITY CONTROL DOCUMENT. MONITORED AND RECORDED DATA SHALL INCLUDE TOTAL PILE DEPTH, GROUT PRESSURES AND QUANTITIES, SOILS/ROCK ENCOUNTERED DURING INSTALLATION AND ANY OBSTRUCTIONS OR IRREGULARITIES.

NOTES:

1. THE PIER MICROPILES ARE DESIGNED TO SUPPORT A MAXIMUN SERVICE LIMIT STATE AXIAL LOAD OF XXX KIPS PER PILE COMPRESSION AND XX KIPS PER PILE TENSION AND A MAXIMUN STRENGH LIMIT STATE AXIAL LOAD OF XXX KIPS PER PILE COMPRESSION AND XX KIPS PER PILE TENSION.
2. CASING SHALL BE API 5L OR 5CT GRADE N80 OR APPROVED EQUAL.
3. ANCHOR PLATE SHALL MEET REQUIREMENTS OF ASTM A709 GRADE 50.
4. GROUT SHALL HAVE MINIMUM 28 DAY COMPRESSIVE STREGTH OF 5000 PSI IN ACCORDANCE WITH ASTM C109. BOND ZONE GROUT AND CONCRETE FOOTING SHALL REACH A MINIMUM STRENGTH OF 4000 PSI AND AGE OF 3 DAYS PRIOR TO TESTING.
5. LOAD TESTS SHALL BE PERFORMED IN ACCORDANCE WITH PROJECT SPECIFICATIONS.
6. BOND ZONE LENGTH SHALL BE CONFIRMED BY TEST PILES AS INDICATED IN THE SPECIAL PROVISIONS.
7. 3" DIAMETER BAR SHALL BE CONTINUOUSLY THREADED FOR THE ENTIRE BAR LENGTH CONFORMING TO ASTM A615, HAVING MINIMUM YIELD STRENGTH 75 KSI, EPOXY COATED.
8. THREAD BAR NUT SHALL CONFORM TO THREAD BAR MANUFACTURER REQUIREMENTS.
9. FOR SLOPES OF BATTERED PILES, SEE BRIDGE SHEET NO. B3A, B4A, B5A AND B6A.

Progress Plan
January 27, 2012

ARCHER WESTERN CONTRACTORS

HNTB
HNTB Corporation
The HNTB Companies
Engineers Architects Planners

SUBDIRECTORY	.DGN LOCATOR	SHEET SCALE
	$FILENAME$	AS NOTED

STATE OF NEW HAMPSHIRE
DEPARTMENT OF TRANSPORTATION * BUREAU OF BRIDGE DESIGN

TOWN PORTSMOUTH, NH. - KITTERY, ME. BRIDGE NO. 247 \ 084 STATE PROJECT 13678F

LOCATION U.S. ROUTE 1 OVER PISCATAQUA RIVER

MICROPILE FOUNDATION DETAILS

REVISIONS AFTER PROPOSAL		BY	DATE		BY	DATE
	DESIGNED	RMW	09/11	CHECKED	HHW	09/11
	DRAWN	PRE	09/11	CHECKED	JN	09/11
	QUANTITIES	XX	XX/XX	CHECKED	XX	XX/XX
	ISSUE DATE		FEDERAL PROJECT NO.		SHEET NO.	
	REV. DATE					

BRIDGE SHEET B8 OF

FILE NUMBER 107-1-1

TOTAL SHEETS

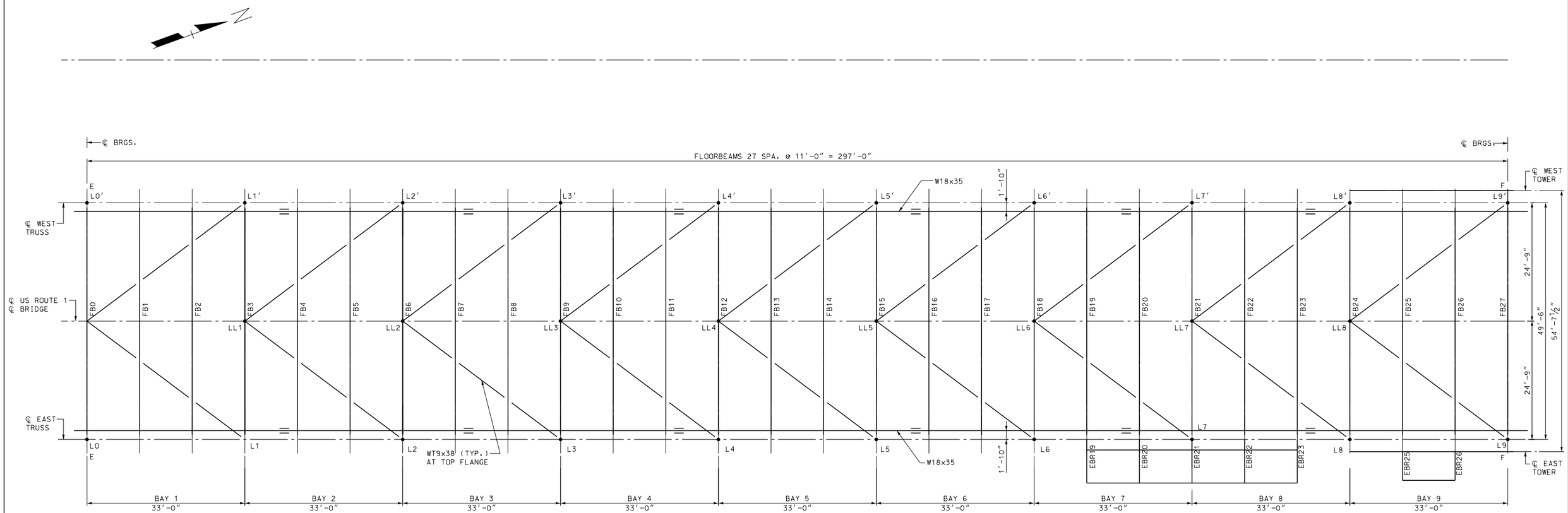

SOUTH FIXED TRUSS SPAN - FRAMING PLAN

1" = 10'-0"

LEGEND:

L (n)	INDICATES BOTTOM CHORD PANEL POINT	E	INDICATES EXPANSION BRG.
FB (n)	INDICATES FLOORBEAM NUMBER	F	INDICATES FIXED BRG.
LL (n)	INDICATES LOWER LATERAL PANEL POINT		
EBR (n)	INDICATES PLATFORM BRACKETS		

NOTES:

1. FOR TYPICAL TRUSS GEOMETRY, SEE BRIDGE SHEET B1G.
2. ALL FRAME DIMENSIONS ARE MEASURED HORIZONTALLY ALONG CENTERLINE OF TRUSS GIRDER.
3. FOR TYPICAL FIXED SPAN CROSS SECTIONS, SEE BRIDGE SHEET B15.
4. PANEL POINT NUMBERS WITH A PRIME SYMBOL DESIGNATE PANELS LOCATED ON THE WEST FASCIA OF THE STRUCTURE.
5. FOR SOUTH TOWER ELEVATIONS, SEE BRIDGE SHEET B30.
6. ALL STRUCTURAL STEEL SHALL BE AASHTO M270 GRADE 50 UNLESS NOTED OTHERWISE.

80% Submission
January 10, 2012

ARCHER WESTERN CONTRACTORS

HNTB
HNTB Corporation
The HNTB Companies
Engineers Architects Planners

SUBDIRECTORY	.DGN LOCATOR	SHEET SCALE
	$FILENAME$	1" = 10'-0"

STATE OF NEW HAMPSHIRE
DEPARTMENT OF TRANSPORTATION * BUREAU OF BRIDGE DESIGN

TOWN PORTSMOUTH, NH. - KITTERY, ME. BRIDGE NO. 247 \ 084 STATE PROJECT 13678F

LOCATION U.S. ROUTE 1 OVER PISCATAQUA RIVER

SOUTH FIXED SPAN - FRAMING PLAN

REVISIONS AFTER PROPOSAL		BY	DATE		BY	DATE
	DESIGNED	JN	09/11	CHECKED	TPZ	09/11
	DRAWN	PRE	09/11	CHECKED	GT	09/11
	QUANTITIES	XX	XX/XX	CHECKED	XX	XX/XX
	ISSUE DATE		FEDERAL PROJECT NO.		SHEET NO.	
	REV. DATE					

BRIDGE SHEET B13 OF
FILE NUMBER 107-1-1
TOTAL SHEETS

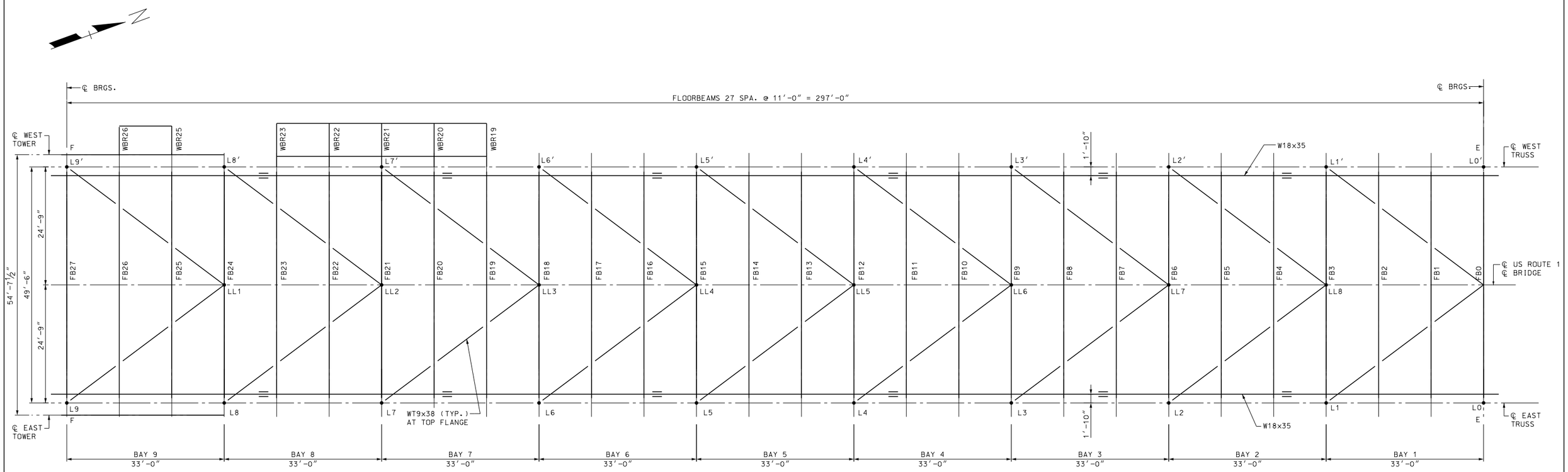

NORTH FIXED TRUSS SPAN - FRAMING PLAN

1" = 10'-0"

LEGEND:

L (n)	INDICATES BOTTOM CHORD PANEL POINT
FB (n)	INDICATES FLOORBEAM NUMBER
LL (n)	INDICATES LOWER LATERAL PANEL POINT
WBR (n)	INDICATES PLATFORM BRACKETS
E	INDICATES EXPANSION BRG.
F	INDICATES FIXED BRG.

NOTES:

1. FOR TYPICAL TRUSS GEOMETRY, SEE BRIDGE SHEET B16.
2. ALL FRAME DIMENSIONS ARE MEASURED HORIZONTALLY ALONG CENTERLINE OF TRUSS GIRDER.
3. FOR TYPICAL FIXED SPAN CROSS SECTIONS, SEE BRIDGE SHEET B15.
4. PANEL POINT NUMBERS WITH A PRIME SYMBOL DESIGNATE PANELS LOCATED ON THE WEST FASCIA OF THE STRUCTURE.
5. FOR NORTH TOWER ELEVATIONS, SEE BRIDGE SHEET B31.
6. ALL STRUCTURAL STEEL SHALL BE AASHTO M270 GRADE 50 UNLESS NOTED OTHERWISE.

80% Submission
January 10, 2012

ARCHER WESTERN CONTRACTORS

HNTB
HNTB Corporation
The HNTB Companies
Engineers Architects Planners

SUBDIRECTORY	.DGN LOCATOR	SHEET SCALE
	$FILENAME$	1" = 10'-0"

STATE OF NEW HAMPSHIRE
DEPARTMENT OF TRANSPORTATION * BUREAU OF BRIDGE DESIGN

TOWN PORTSMOUTH, NH. - KITTERY, ME. BRIDGE NO. 247 \ 084 STATE PROJECT 13678F

LOCATION U.S. ROUTE 1 OVER PISCATAQUA RIVER

NORTH FIXED SPAN - FRAMING PLAN

BRIDGE SHEET B14 OF

FILE NUMBER 107-1-1

REVISIONS AFTER PROPOSAL		BY	DATE		BY	DATE
	DESIGNED	JN	09/11	CHECKED	TPZ	09/11
	DRAWN	PRE	09/11	CHECKED	GT	09/11
	QUANTITIES	XX	XX/XX	CHECKED	XX	XX/XX

ISSUE DATE | FEDERAL PROJECT NO. | SHEET NO. | TOTAL SHEETS

REV. DATE

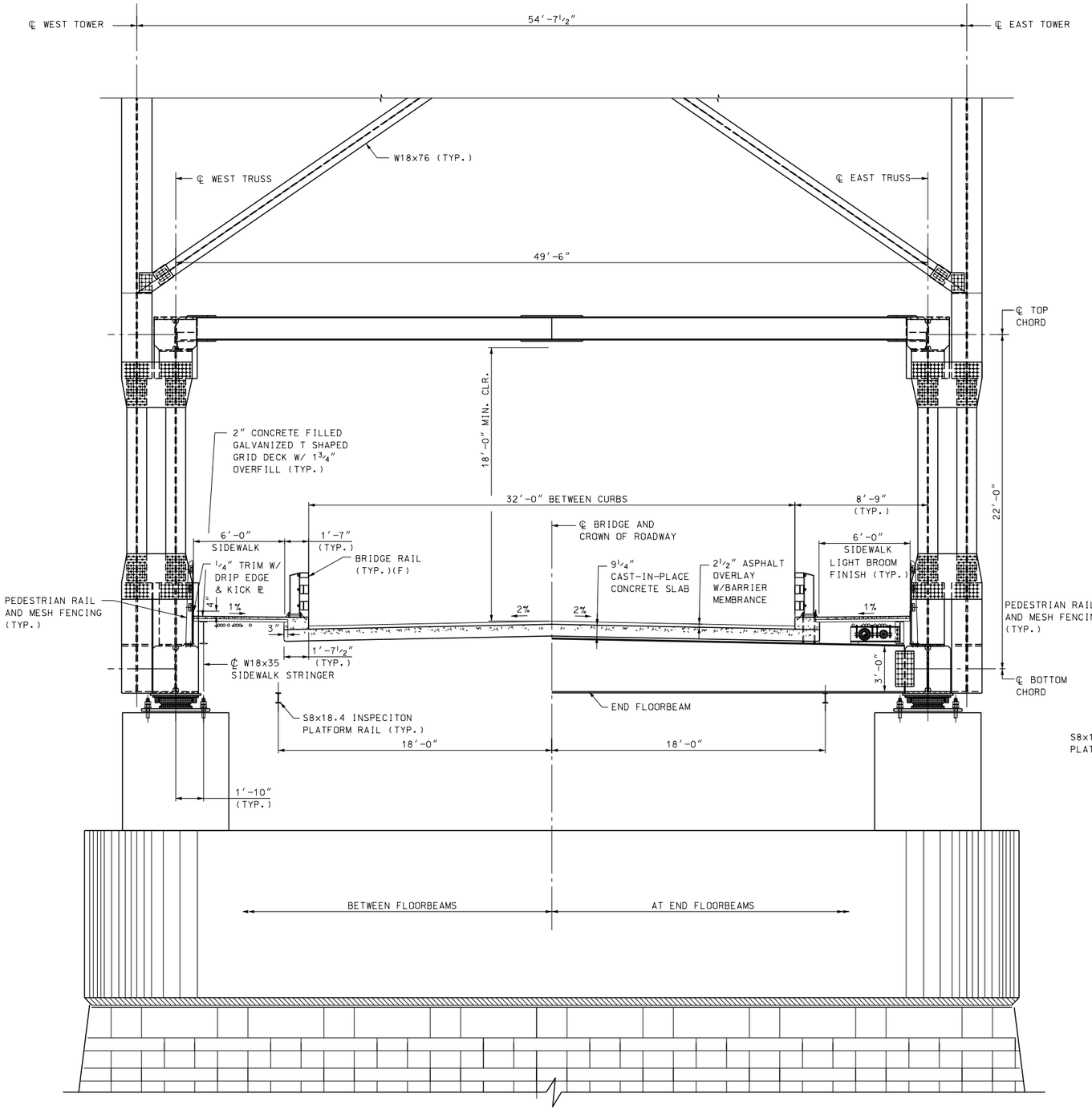

FIXED SPAN CROSS SECTION AT SOUTH TOWER

(LOOKING NORTH)

¼″ = 1′-0″

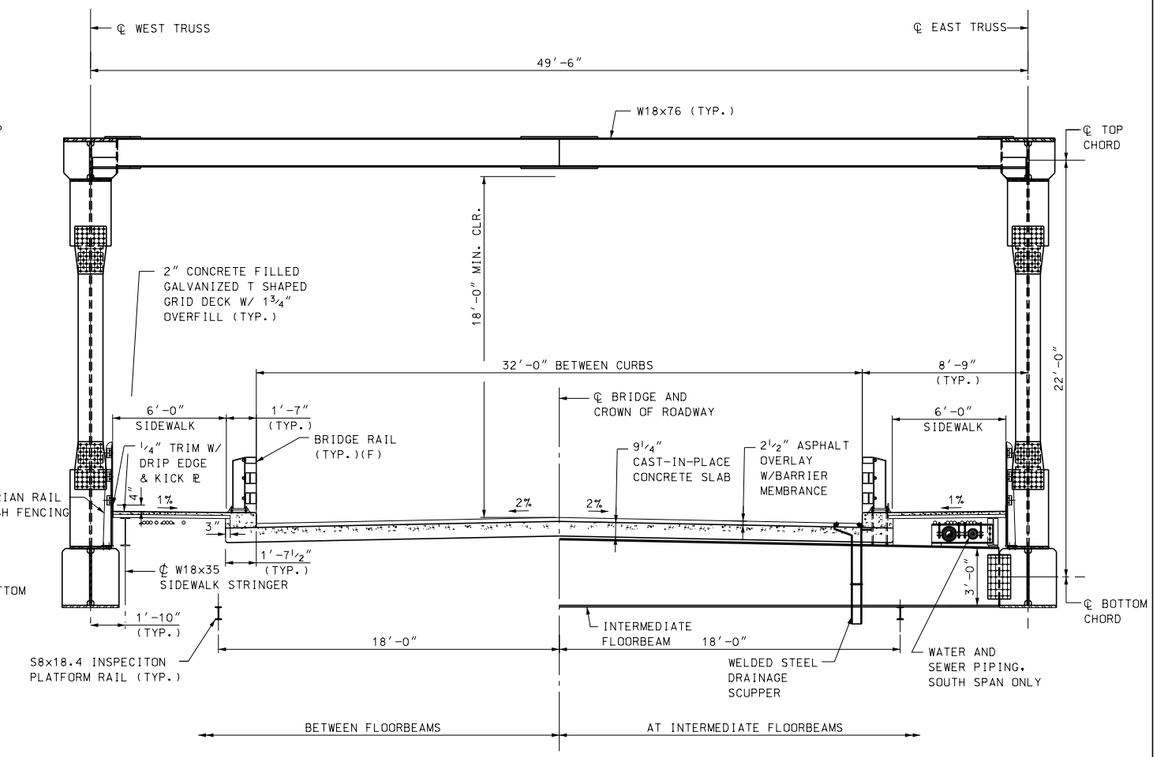

TYPICAL FIXED TRUSS SPAN CROSS SECTION

(LOOKING NORTH)

¼″ = 1′-0″

NOTES:

1. FOR SOUTH AND NORTH FIXED SPAN FRAMING PLANS, SEE BRIDGE SHEET B13 AND B14 RESPECTIVELY.
2. ALL BOLTS SHALL BE ⅞″ DIA. HIGH STRENGTH ASTM A325 AND SHALL BE GALVANIZED PER THE REQUIREMENTS OF ASTM A153. NUTS AND WASHERS SHALL BE A563 AND F436 RESPECTIVELY, AND SHALL BE GALVANIZED PER REQUIREMENTS OF ASTM A153
3. FOR DECK REINFORCING DETAILS, SEE BRIDGE SHEET B15A.
4. FOR WATER AND SEWER PIPING SUPPORT DETAILS, SEE BRIDGE SHEET B70.

80% Submission
January 10, 2012

ARCHER WESTERN CONTRACTORS

HNTB
HNTB Corporation
The HNTB Companies
Engineers Architects Planners

SUBDIRECTORY	.DGN LOCATOR	SHEET SCALE
	$FILENAME$	1/4" = 1'-0"

STATE OF NEW HAMPSHIRE
DEPARTMENT OF TRANSPORTATION * BUREAU OF BRIDGE DESIGN

TOWN PORTSMOUTH, NH. - KITTERY, ME. BRIDGE NO. 247 \ 084 STATE PROJECT 13678F

LOCATION U.S. ROUTE 1 OVER PISCATAQUA RIVER

FIXED SPAN - TYPICAL CROSS SECTIONS

BRIDGE SHEET B15 OF

FILE NUMBER 107-1-1

REVISIONS AFTER PROPOSAL		BY	DATE		BY	DATE
	DESIGNED	CSE	09/11	CHECKED	TPZ	09/11
	DRAWN	PRE	09/11	CHECKED	GT	09/11
	QUANTITIES	XX	XX/XX	CHECKED	XX	XX/XX
	ISSUE DATE		FEDERAL PROJECT NO.		SHEET NO.	TOTAL SHEETS
	REV. DATE					

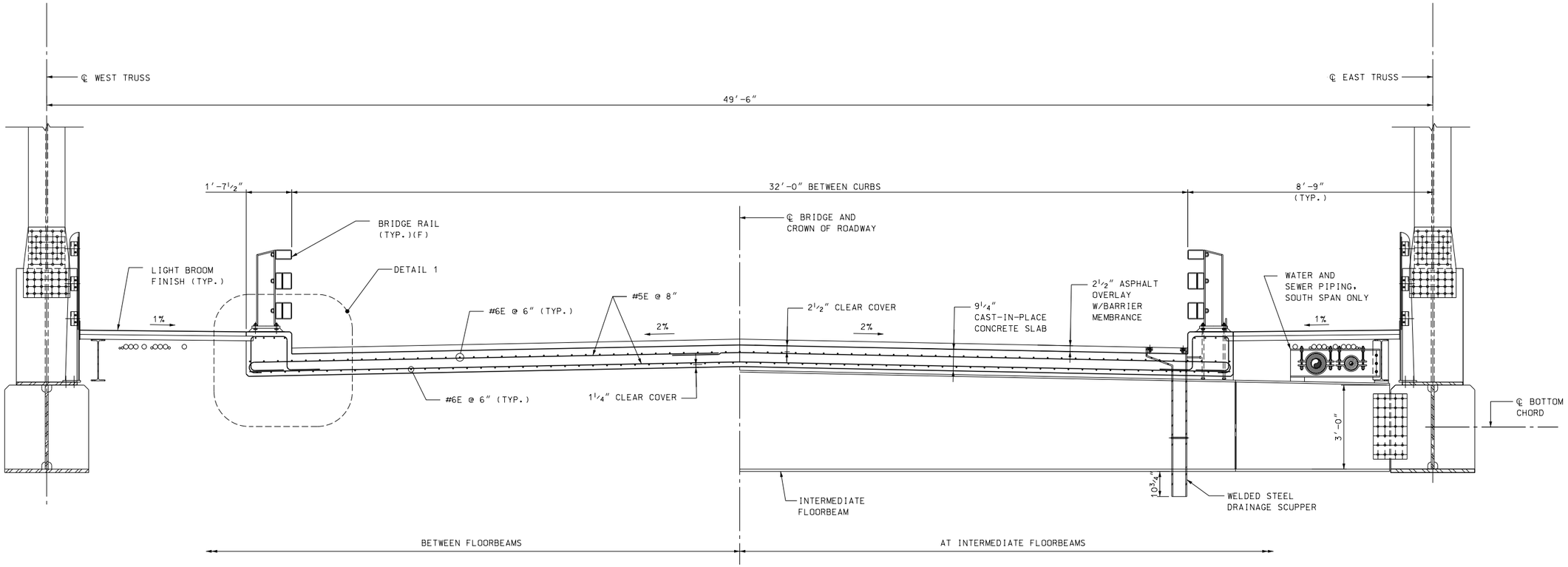

TYPICAL FIXED SPAN DECK CROSS SECTION

(LOOKING NORTH)

½″ = 1′-0″

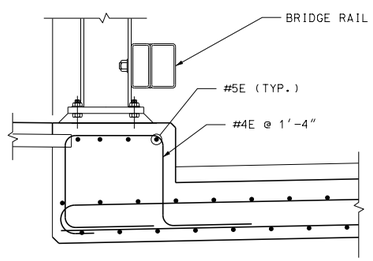

DETAIL 1

1″ = 1′-0″

NOTES:

1. FOR SOUTH AND NORTH FIXED SPAN FRAMING PLANS, SEE BRIDGE SHEET B13 AND B14 RESPECTIVELY.
2. FOR DECK REINFORCING PLAN, SEE BRIDGE SHEETS B24A THRU 24C.
3. ALL DECK REINFORCING BARS SHALL BE EPOXY COATED.
4. FOR TYPICAL DRAINAGE SCUPPER DETAILS, SEE BRIDGE SHEET B27.
5. FOR WATER AND SEWER PIPING SUPPORT DETAILS, SEE BRIDGE SHEET B70.

80% Submission
January 10, 2012

ARCHER WESTERN CONTRACTORS

HNTB
HNTB Corporation
The HNTB Companies
Engineers Architects Planners

STATE OF NEW HAMPSHIRE
DEPARTMENT OF TRANSPORTATION * BUREAU OF BRIDGE DESIGN

TOWN PORTSMOUTH, NH. - KITTERY, ME. BRIDGE NO. 247 \ 084 STATE PROJECT 13678F

LOCATION U.S. ROUTE 1 OVER PISCATAQUA RIVER

FIXED SPAN - DECK REINFORCING DETAILS

REVISIONS AFTER PROPOSAL		BY	DATE		BY	DATE
	DESIGNED	CSE	09/11	CHECKED	TPZ	09/11
	DRAWN	LR	09/11	CHECKED	GT	09/11
	QUANTITIES	XX	XX/XX	CHECKED	XX	XX/XX
	ISSUE DATE		FEDERAL PROJECT NO.		SHEET NO.	
	REV. DATE					

SUBDIRECTORY	.DGN LOCATOR	SHEET SCALE
	$FILENAME$	1/2" = 1'-0"

BRIDGE SHEET B15A OF

FILE NUMBER 107-1-1

TOTAL SHEETS

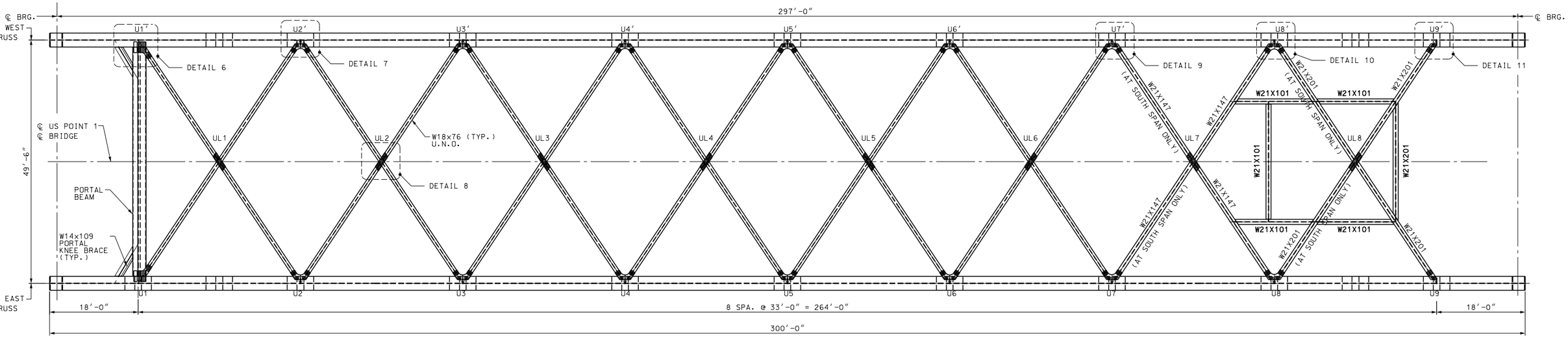

UPPER LATERAL BRACING PLAN

1" = 10'-0"

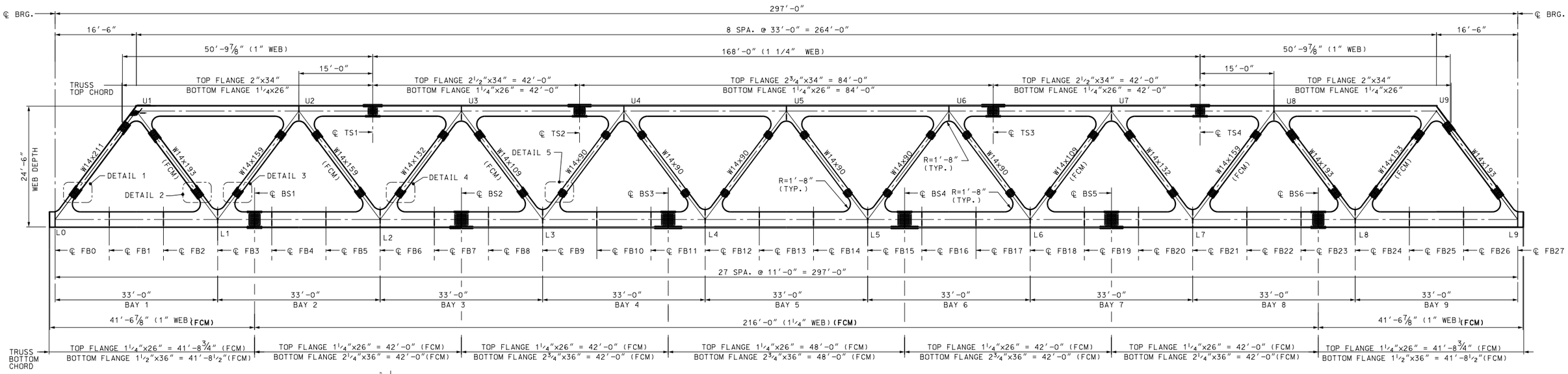

TYPICAL TRUSS ELEVATION

1" = 10'-0"

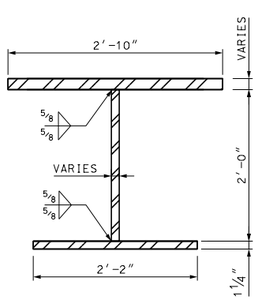

TRUSS TOP CHORD

1"= 1'-0"

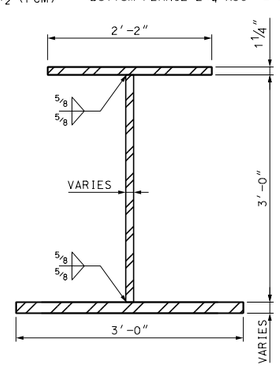

TRUSS BOTTOM CHORD

1"= 1'-0"

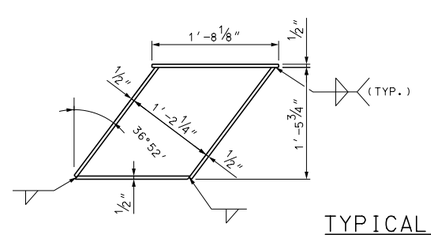

PORTAL BEAM

1"= 1'-0"

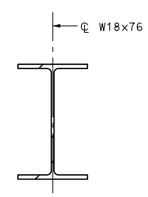

TYPICAL UPPER LATERAL DIAGONAL

1"= 1'-0"

LEGEND:

L(n)	INDICATES BOTTOM CHORD PANEL POINT
U(n)	INDICATES TOP CHORD PANEL POINT
UL(n)	INDICATES UPPER LATERAL PANEL POINT
TS(n)	INDICATES TOP CHORD SPLICE LOCATION
BS(n)	INDICATES BOTTOM CHORD SPLICE LOCATION
FCM	INDICATES FRACTURE CRITICAL MEMBER
FB(n)	INDICATES FLOORBEAM MEMBER

NOTES:

1. ALL STRUCTURAL STEEL SHALL BE AASHTO M270 GRADE 50 UNLESS NOTED OTHERWISE.
2. PANEL POINT NUMBERS WITH A PRIME SYMBOL DESIGNATE PANELS LOCATED ON THE WEST FASCIA OF THE STRUCTURE.
3. FOR DETAILS 1 THRU 5, SEE BRIDGE SHEET B19.
4. FOR DETAILS 6 THRU 8, SEE BRIDGE SHEET B20.
5. FOR DETAILS 9 THRU 11, SEE BRIDGE SHEET B20A.
6. FOR PORTAL BEAM AND KNEE BRACE DETAILS, SEE BRIDGE SHEET B1GE.

80% Submission
January 10, 2012

ARCHER WESTERN CONTRACTORS

HNTB
HNTB Corporation
The HNTB Companies
Engineers Architects Planners

STATE OF NEW HAMPSHIRE
DEPARTMENT OF TRANSPORTATION * BUREAU OF BRIDGE DESIGN

TOWN PORTSMOUTH, NH. - KITTERY, ME. BRIDGE NO. 247 \ 084 STATE PROJECT 13678F

LOCATION U.S. ROUTE 1 OVER PISCATAQUA RIVER

TYPICAL FIXED SPAN - TRUSS GEOMETRY

REVISIONS AFTER PROPOSAL	BY	DATE		BY	DATE
DESIGNED	CSE	09/11	CHECKED	TPZ	09/11
DRAWN	SPL	09/11	CHECKED	GT	09/11
QUANTITIES	XX	XX/XX	CHECKED	XX	XX/XX
ISSUE DATE			FEDERAL PROJECT NO.		SHEET NO.
REV. DATE					

BRIDGE SHEET B16 OF
FILE NUMBER 107-1-1
TOTAL SHEETS

SUBDIRECTORY	.DGN LOCATOR	SHEET SCALE
	SFILENAMES	AS NOTED

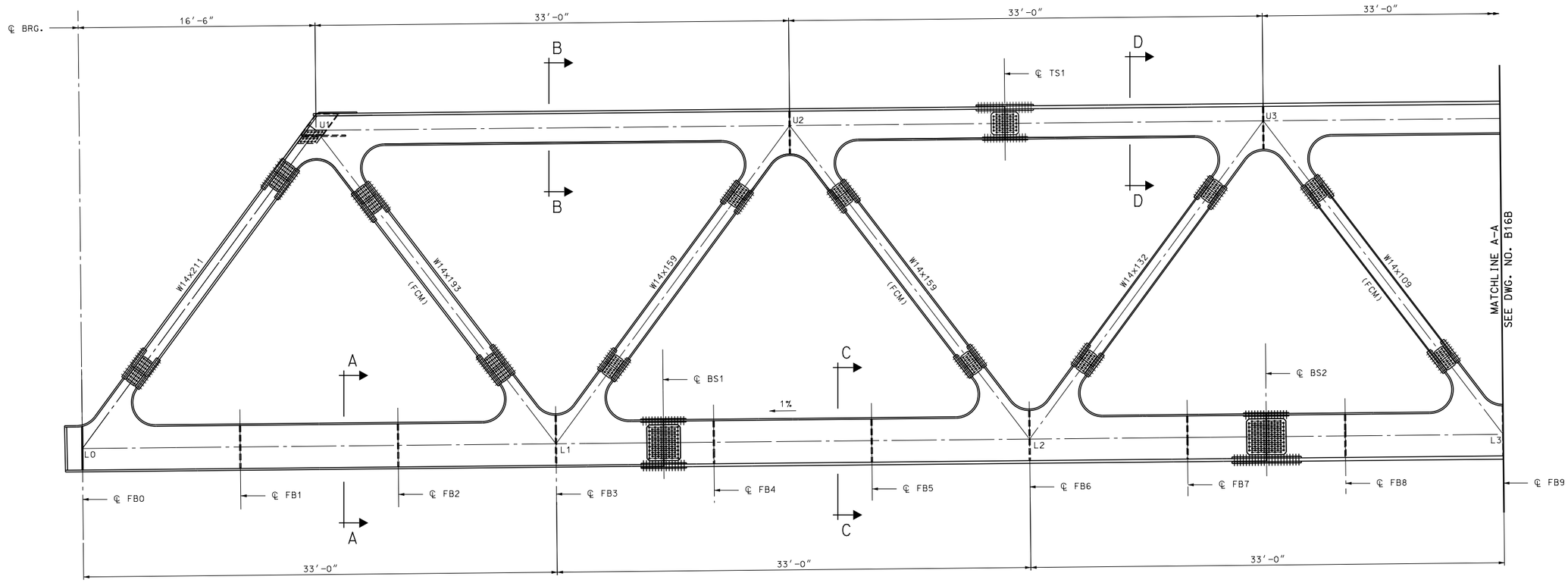

MODIFIED TRUSS SPAN ELEVATION: L0 TO L3

1/4" = 1'-0"

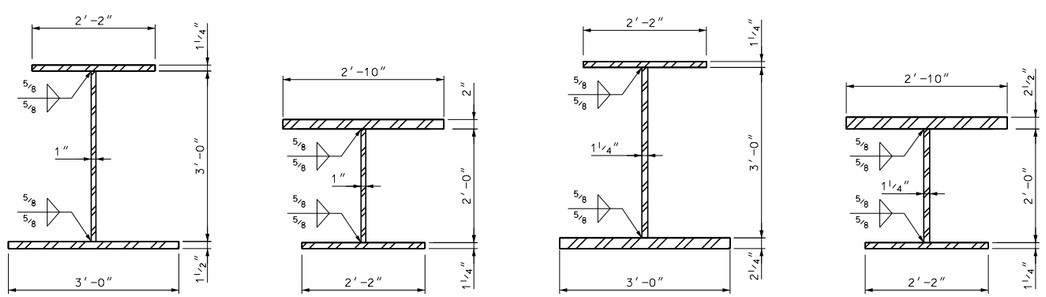

SECTION A-A

3/4" = 1'-0"

SECTION B-B

3/4" = 1'-0"

SECTION C-C

3/4" = 1'-0"

SECTION D-D

3/4" = 1'-0"

LEGEND:

L(n)	INDICATES BOTTOM CHORD PANEL POINT
U(n)	INDICATES TOP CHORD PANEL POINT
TS(n)	INDICATES TOP CHORD SPLICE LOCATION
BS(n)	INDICATES BOTTOM CHORD SPLICE LOCATION
FCM	INDICATES FRACTURE CRITICAL MEMBER
FB(n)	INDICATES FLOORBEAM NUMBER

NOTES:

1. ALL STRUCTURAL STEEL SHALL BE AASHTO M270 GRADE 50 UNLESS NOTED OTHERWISE.
2. ALL TRUSS CHORD DIMENSION ARE MEASURED HORIZONTALLY ALONG CENTERLINE OF TRUSS CHORD.
3. FOR FRAMING PLANS, SEE BRIDGE SHEETS B13 AND B14.
4. FOR TRUSS CHORD SPLICE DETAILS, SEE BRIDGE SHEETS B18 AND B18A.
5. FOR DIAGONAL SPLICE DETAILS, SEE BRIDGE SHEET B19.

80% Submission
January 10, 2012

ARCHER WESTERN CONTRACTORS

HNTB
HNTB Corporation
The HNTB Companies
Engineers Architects Planners

SUBDIRECTORY	.DGN LOCATOR	SHEET SCALE
	$FILENAME$	AS NOTED

STATE OF NEW HAMPSHIRE
DEPARTMENT OF TRANSPORTATION * BUREAU OF BRIDGE DESIGN

TOWN PORTSMOUTH, NH. - KITTERY, ME. BRIDGE NO. 247\084 STATE PROJECT 13678F

LOCATION U.S. ROUTE 1 OVER PISCATAQUA RIVER

FIXED SPAN - TRUSS ELEVATION 1 OF 3

BRIDGE SHEET B16A OF

REVISIONS AFTER PROPOSAL		BY	DATE		BY	DATE
	DESIGNED	CSE	09/11	CHECKED	TPZ	09/11
	DRAWN	SPL	09/11	CHECKED	GT	09/11
	QUANTITIES	XX	XX/XX	CHECKED	XX	XX/XX

FILE NUMBER 107-1-1

ISSUE DATE	FEDERAL PROJECT NO.	SHEET NO.	TOTAL SHEETS
REV. DATE			

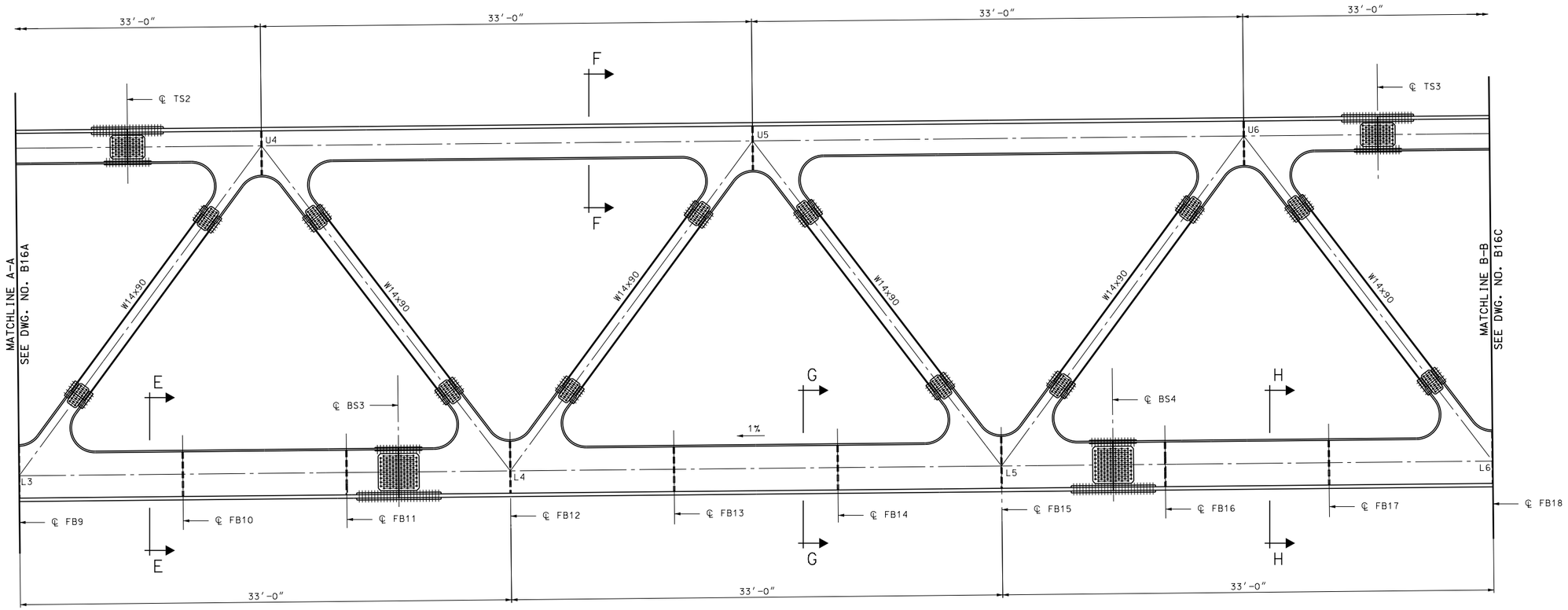

MODIFIED TRUSS SPAN ELEVATION: L3 TO L6

1/4" = 1'-0"

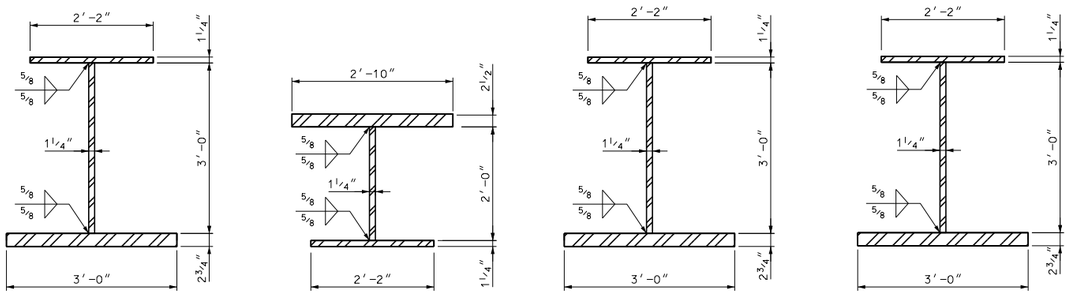

SECTION E-E

3/4" = 1'-0"

SECTION F-F

3/4" = 1'-0"

SECTION G-G

3/4" = 1'-0"

SECTION H-H

3/4" = 1'-0"

LEGEND:

L(n)	INDICATES BOTTOM CHORD PANEL POINT
U(n)	INDICATES TOP CHORD PANEL POINT
TS(n)	INDICATES TOP CHORD SPLICE LOCATION
BS(n)	INDICATES BOTTOM CHORD SPLICE LOCATION
FCM	INDICATES FRACTURE CRITICAL MEMBER
FB(n)	INDICATES FLOORBEAM NUMBER

NOTES:

1. ALL STRUCTURAL STEEL SHALL BE AASHTO M270 GRADE 50 UNLESS NOTED OTHERWISE.
2. ALL TRUSS CHORD DIMENSION ARE MEASURED HORIZONTALLY ALONG CENTERLINE OF TRUSS CHORD.
3. FOR FRAMING PLANS, SEE BRIDGE SHEETS B13 AND B14.
4. FOR TRUSS CHORD SPLICE DETAILS, SEE BRIDGE SHEETS B18 AND B18A.
5. FOR DIAGONAL SPLICE DETAILS, SEE BRIDGE SHEET B19.

80% Submission
January 10, 2012

ARCHER WESTERN CONTRACTORS

HNTB
HNTB Corporation
The HNTB Companies
Engineers Architects Planners

SUBDIRECTORY	.DGN LOCATOR	SHEET SCALE
	$FILENAME$	AS NOTED

STATE OF NEW HAMPSHIRE
DEPARTMENT OF TRANSPORTATION * BUREAU OF BRIDGE DESIGN

TOWN PORTSMOUTH, NH. - KITTERY, ME. BRIDGE NO. 247 \ 084 STATE PROJECT 13678F

LOCATION U.S. ROUTE 1 OVER PISCATAQUA RIVER

FIXED SPAN - TRUSS ELEVATION 2 OF 3

BRIDGE SHEET B16B OF

REVISIONS AFTER PROPOSAL	BY	DATE		BY	DATE
DESIGNED	CSE	09/11	CHECKED	TPZ	09/11
DRAWN	SPL	09/11	CHECKED	GT	09/11
QUANTITIES	XX	XX/XX	CHECKED	XX	XX/XX
ISSUE DATE			FEDERAL PROJECT NO.		SHEET NO.
REV. DATE					

FILE NUMBER 107-1-1

TOTAL SHEETS

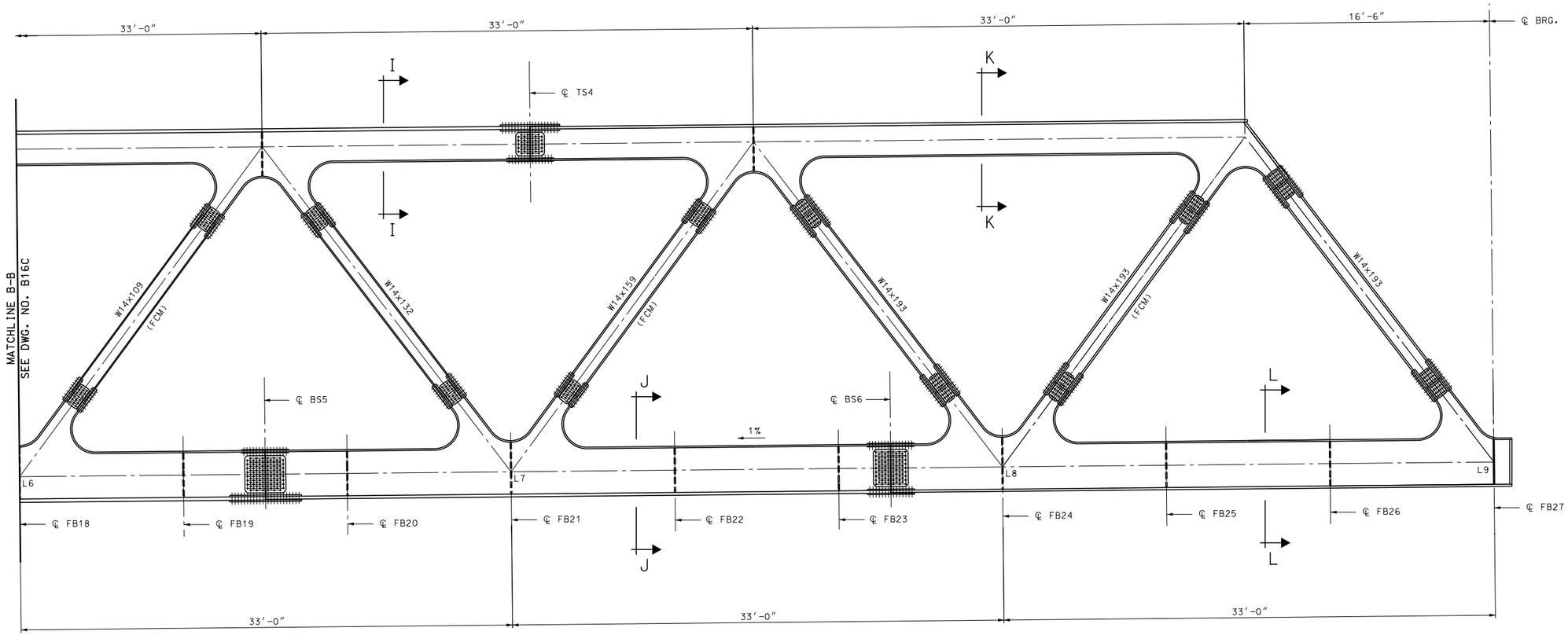

MODIFIED TRUSS SPAN ELEVATION: L6 TO L9

1/4" = 1'-0"

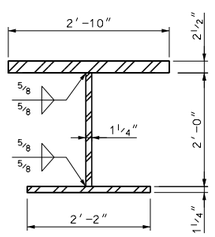

SECTION I-I

3/4" = 1'-0"

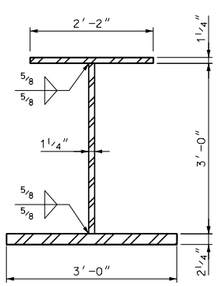

SECTION J-J

3/4" = 1'-0"

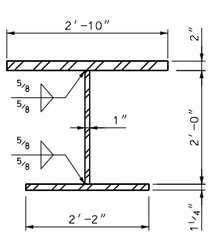

SECTION K-K

3/4" = 1'-0"

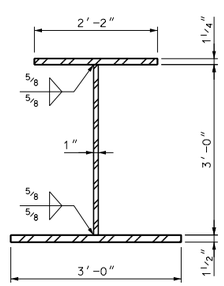

SECTION L-L

3/4" = 1'-0"

LEGEND:

L(n)	INDICATES BOTTOM CHORD PANEL POINT
U(n)	INDICATES TOP CHORD PANEL POINT
TS(n)	INDICATES TOP CHORD SPLICE LOCATION
BS(n)	INDICATES BOTTOM CHORD SPLICE LOCATION
FCM	INDICATES FRACTURE CRITICAL MEMBER
FB(n)	INDICATES FLOORBEAM NUMBER

NOTES:

1. ALL STRUCTURAL STEEL SHALL BE AASHTO M270 GRADE 50 UNLESS NOTED OTHERWISE.
2. ALL TRUSS CHORD DIMENSION ARE MEASURED HORIZONTALLY ALONG CENTERLINE OF TRUSS CHORD.
3. FOR FRAMING PLANS, SEE BRIDGE SHEETS B13 AND B14.
4. FOR TRUSS CHORD SPLICE DETAILS, SEE BRIDGE SHEETS B18 AND B18A.
5. FOR DIAGONAL SPLICE DETAILS, SEE BRIDGE SHEET B19.

80% Submission
January 10, 2012

ARCHER WESTERN CONTRACTORS

HNTB
HNTB Corporation
The HNTB Companies
Engineers Architects Planners

SUBDIRECTORY	.DGN LOCATOR	SHEET SCALE
	$FILENAME$	AS NOTED

STATE OF NEW HAMPSHIRE
DEPARTMENT OF TRANSPORTATION * BUREAU OF BRIDGE DESIGN

TOWN PORTSMOUTH, NH. - KITTERY, ME. BRIDGE NO. 247\084 STATE PROJECT 13678F

LOCATION U.S. ROUTE 1 OVER PISCATAQUA RIVER

FIXED SPAN - TRUSS ELEVATION 3 OF 3

BRIDGE SHEET B16C DF

REVISIONS AFTER PROPOSAL		BY	DATE		BY	DATE
	DESIGNED	CSE	09/11	CHECKED	TPZ	09/11
	DRAWN	SPL	09/11	CHECKED	GT	09/11
	QUANTITIES	XX	XX/XX	CHECKED	XX	XX/XX
	ISSUE DATE			FEDERAL PROJECT NO.	SHEET NO.	
	REV. DATE					

FILE NUMBER 107-1-1

TOTAL SHEETS

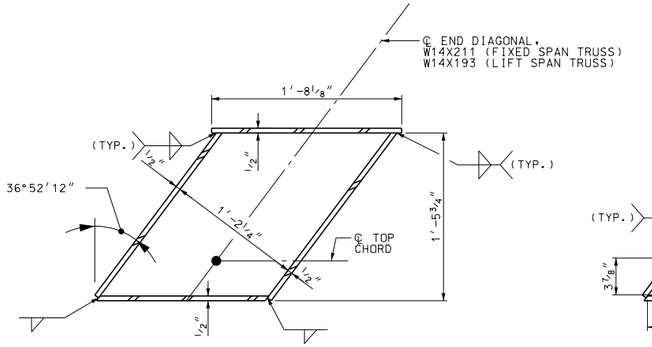

TYPICAL SECTION

1 1/2" = 1'-0"

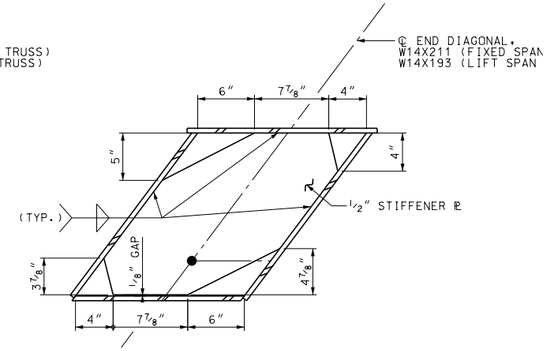

SECTION AT STIFFENER

1 1/2" = 1'-0"

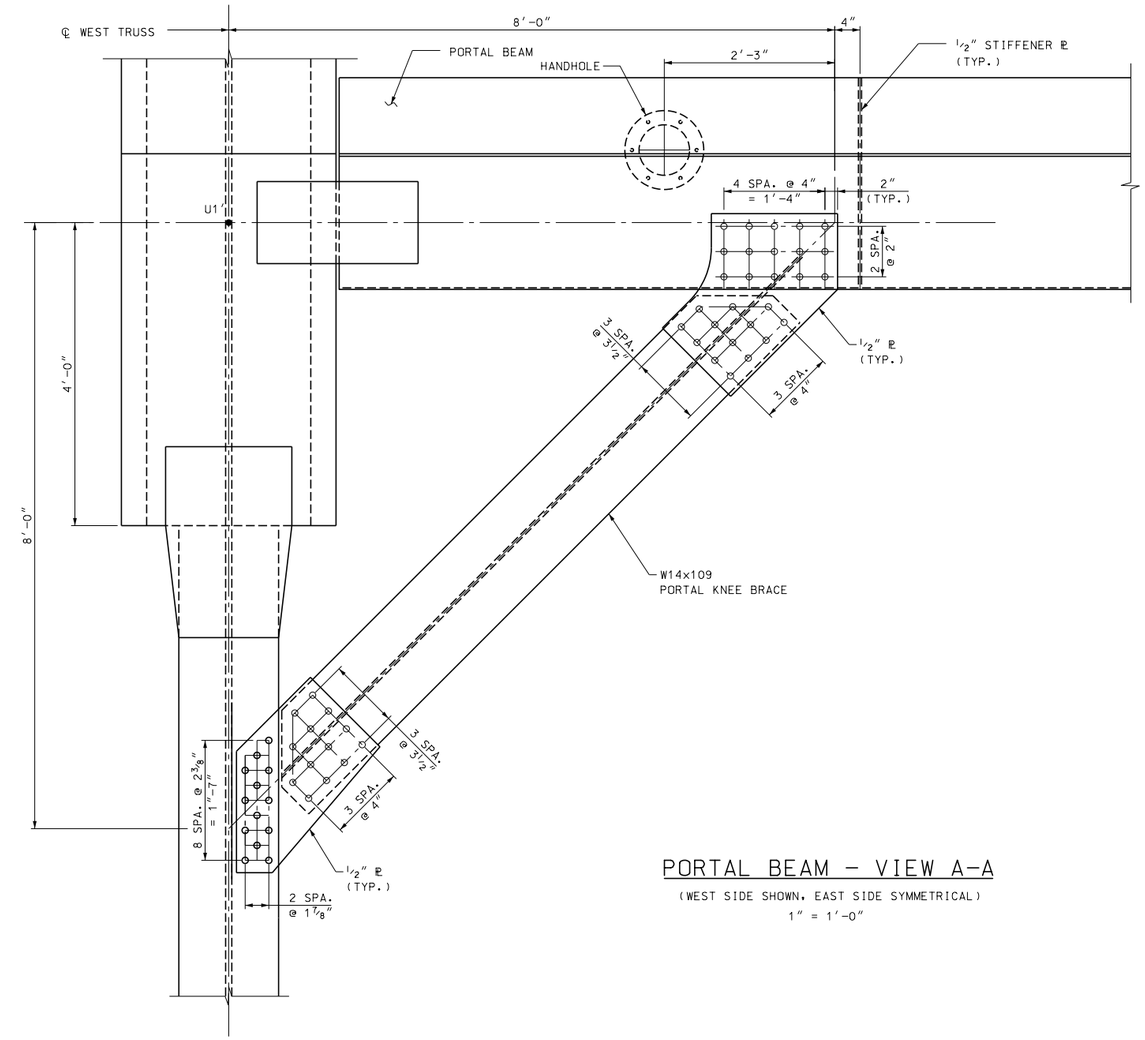

PORTAL BEAM – VIEW A-A

(WEST SIDE SHOWN, EAST SIDE SYMMETRICAL)

1" = 1'-0"

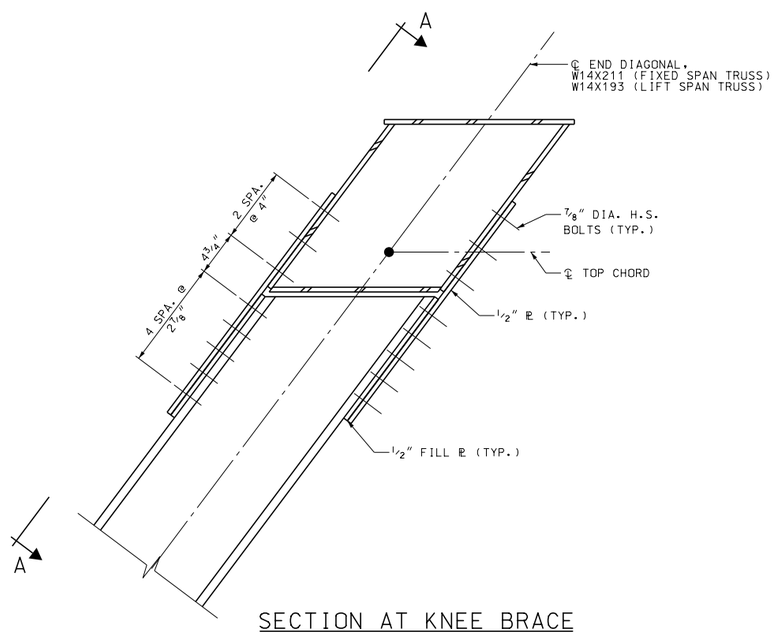

SECTION AT KNEE BRACE

1 1/2" = 1'-0"

NOTES:

1. ALL STRUCTURAL STEEL SHALL CONFORM TO AASHTO M270 (A709) GRADE 50.
2. ALL BOLTS SHALL BE 7/8" DIA. HIGH STRENGTH ASTM A325 AND SHALL BE GALVANIZED PER THE REQUIREMENTS OF ASTM A153. NUTS AND WASHERS SHALL BE A563 AND F436 RESPECTIVELY, AND SHALL BE GALVANIZED PER REQUIREMENTS OF ASTM A153. ALL HOLES FOR 7/8" DIA. BOLTS SHALL BE 15/16" DIA. UNLESS NOTED OTHERWISE.ALL BOLTS, NUTS, AND WASHERS SHALL CONFORM TO SECTION 550 OF THE NHDOT STANDARD SPECIFICATIONS FOR ROAD AND BRIDGE CONSTRUCTION.
3. FOR SOUTH AND NORTH FIXED SPAN FRAMING PLANS, SEE BRIDGE SHEETS B13 AND B14 RESPECTIVELY.

80% Submission
January 10, 2012

ARCHER WESTERN CONTRACTORS

HNTB
HNTB Corporation
The HNTB Companies
Engineers Architects Planners

STATE OF NEW HAMPSHIRE
DEPARTMENT OF TRANSPORTATION * BUREAU OF BRIDGE DESIGN

TOWN PORTSMOUTH, NH. - KITTERY, ME. BRIDGE NO. 247 \ 084 STATE PROJECT 13678F

LOCATION U.S. ROUTE 1 OVER PISCATAQUA RIVER

FIXED SPAN - PORTAL BEAM & KNEE BRACE DETAILS

BRIDGE SHEET B16E OF

FILE NUMBER 107-1-1

REVISIONS AFTER PROPOSAL		BY	DATE		BY	DATE
	DESIGNED	JN	09/11	CHECKED	TPZ	09/11
	DRAWN	PRE	09/11	CHECKED	GT	09/11
	QUANTITIES	XX	XX/XX	CHECKED	XX	XX/XX
	ISSUE DATE		FEDERAL PROJECT NO.		SHEET NO.	TOTAL SHEETS
	REV. DATE					

SUBDIRECTORY	.DGN LOCATOR	SHEET SCALE
	$FILENAME$	AS NOTED

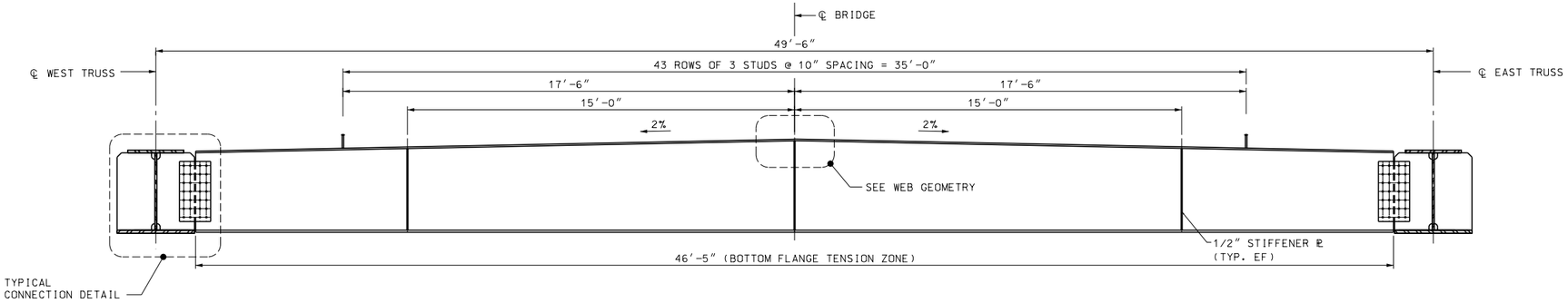

TYPICAL FLOORBEAM ELEVATION

3/8″ = 1′-0″

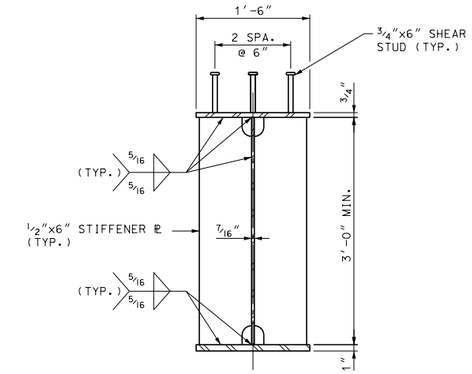

TYPICAL FLOORBEAM CROSS SECTION

1″ = 1′-0″

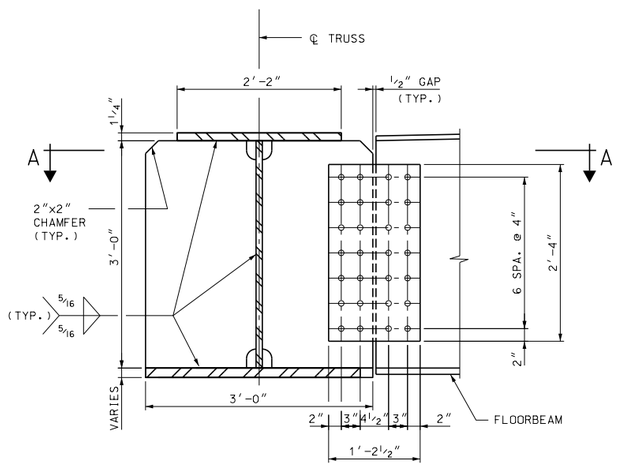

TYPICAL CONNECTION DETAIL

1″ = 1′-0″

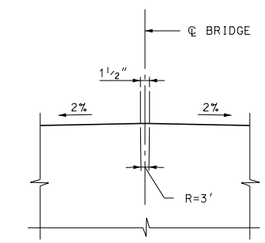

FLOORBEAM WEB GEOMETRY

N.T.S.

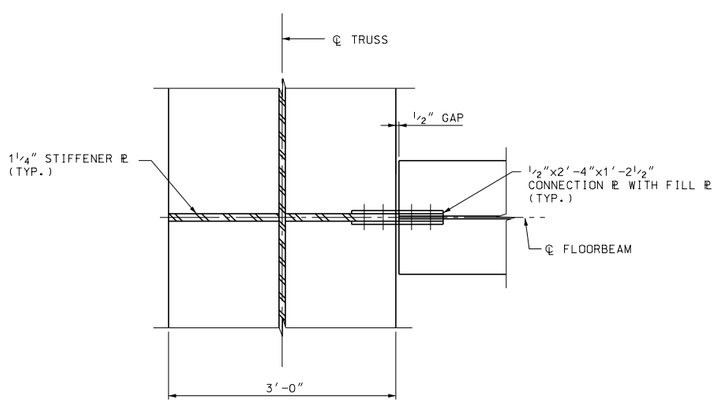

SECTION A-A

1″ = 1′-0″

NOTES:

1. ALL STRUCTURAL STEEL SHALL CONFORM TO AASHTO M270 (A709) GRADE 50.
2. ALL BOLTS SHALL BE 7/8″ DIA. HIGH STRENGTH ASTM A325 AND SHALL BE GALVANIZED PER THE REQUIREMENTS OF ASTM A153. NUTS AND WASHERS SHALL BE A563 AND F436 RESPECTIVELY, AND SHALL BE GALVANIZED PER REQUIREMENTS OF ASTM A153. ALL HOLES FOR 7/8″ DIA. BOLTS SHALL BE 15/16″ DIA. UNLESS NOTED OTHERWISE.ALL BOLTS, NUTS, AND WASHERS SHALL CONFORM TO SECTION 550 OF THE NHDOT STANDARD SPECIFICATIONS FOR ROAD AND BRIDGE CONSTRUCTION.
3. FOR SOUTH AND NORTH FIXED SPAN FRAMING PLANS, SEE BRIDGE SHEETS B13 AND B14 RESPECTIVELY.

80% Submission
January 10, 2012

ARCHER WESTERN CONTRACTORS

HNTB
HNTB Corporation
The HNTB Companies
Engineers Architects Planners

SUBDIRECTORY	.DGN LOCATOR	SHEET SCALE
	$FILENAME$	AS NOTED

STATE OF NEW HAMPSHIRE
DEPARTMENT OF TRANSPORTATION * BUREAU OF BRIDGE DESIGN

TOWN PORTSMOUTH, NH. - KITTERY, ME. BRIDGE NO. 247 \ 084 STATE PROJECT 13678F

LOCATION U.S. ROUTE 1 OVER PISCATAQUA RIVER

FIXED SPAN - FLOORBEAM ELEVATION

REVISIONS AFTER PROPOSAL		BY	DATE		BY	DATE
	DESIGNED	JN	09/11	CHECKED	TPZ	09/11
	DRAWN	PRE	09/11	CHECKED	GT	09/11
	QUANTITIES	XX	XX/XX	CHECKED	XX	XX/XX
	ISSUE DATE					
	REV. DATE					

FEDERAL PROJECT NO. | SHEET NO. | TOTAL SHEETS

BRIDGE SHEET B17 OF

FILE NUMBER 107-1-1

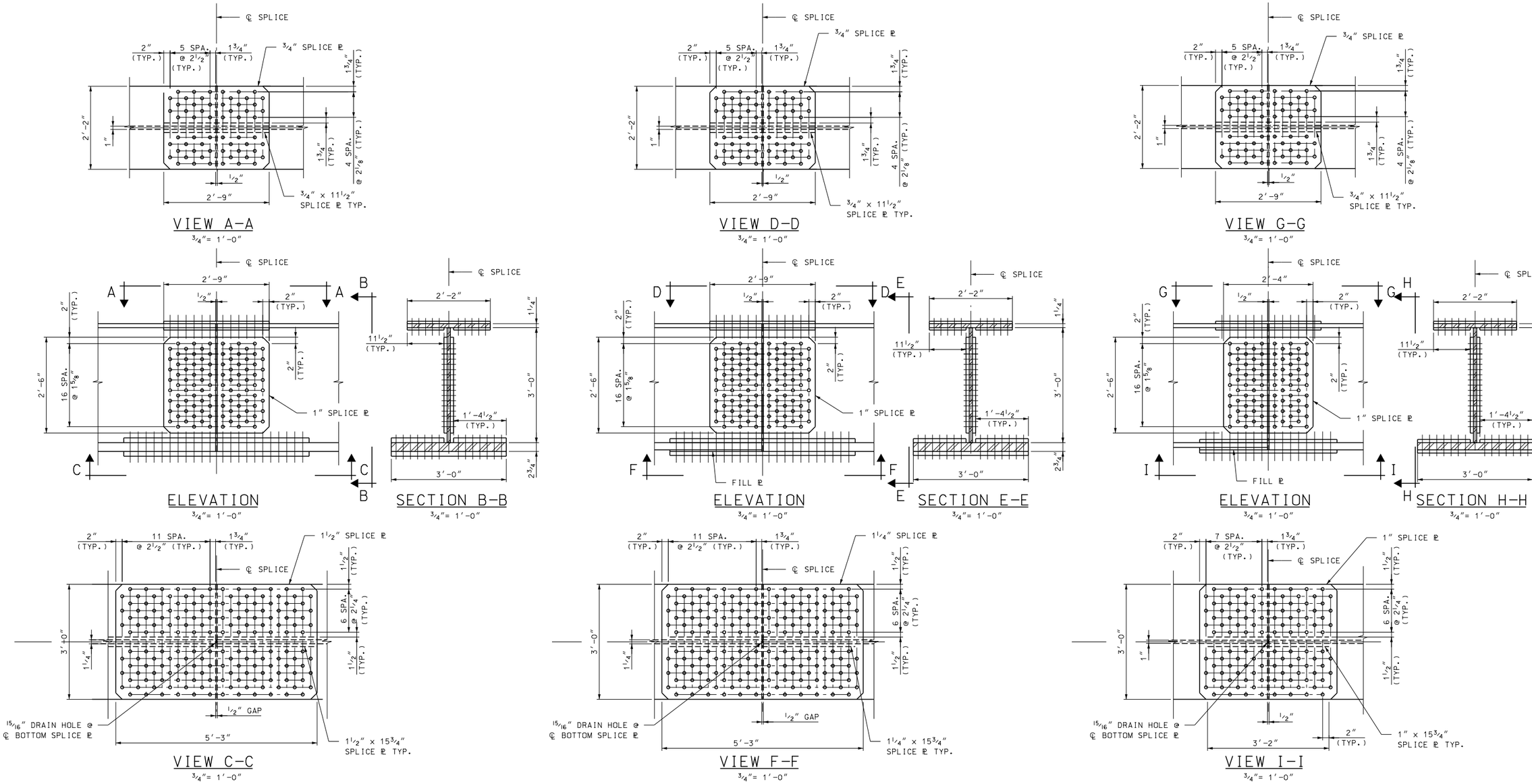

FIXED SPAN TRUSS BOTTOM CHORD SPLICE
BS3 AND BS4
3/4"= 1'-0"

FIXED SPAN TRUSS BOTTOM CHORD SPLICE
BS2 AND BS5
3/4"= 1'-0"

FIXED SPAN TRUSS BOTTOM CHORD SPLICE
BS1 AND BS6
3/4"= 1'-0"

LEGEND:

TS(n) INDICATES TOP CHORD SPLICE LOCATION
BS(n) INDICATES BOTTOM CHORD SPLICE LOCATION

NOTES:

1. ALL STRUCTURAL STEEL SHALL BE AASHTO M270 GRADE 50 UNLESS NOTED OTHERWISE.
2. FOR LOCATIONS OF TRUSS CHORD SPLICES, SEE BRIDGE SHEET B16.
3. ALL BOLTS SHALL BE 7/8" DIA. HIGH STRENGTH ASTM A325 AND SHALL BE GALVANIZED PER THE REQUIREMENT OF ASTM A153. NUTS AND WASHERS SHALL BE A563 AND F436 RESPECTIVELY, AND SHALL BE GALVANIZED PER THE REQUIREMENT OF ASTM A153. ALL BOLTS, NUTS, AND WASHERS SHALL CONFORM TO SECTION 550 OF THE NHDOT STANDARD SPECIFICATIONS FOR ROAD AND BRIDGE CONSTRUCTION.
4. ALL SPLICE PLATES SHALL BE SAME GRADE STEEL AS THE TRUSS CHORD.
5. FLANGE AND WEB SPLICE PLATES SHALL BE FURNISHED WITH THERMAL CUT EDGES AS PER SECTION 550 OF THE NHDOT STANDARD SPECIFICATION FOR ROAD AND BRIDGE CONSTRUCTION.

80% Submission
January 10, 2012

ARCHER WESTERN CONTRACTORS

HNTB
HNTB Corporation
The HNTB Companies
Engineers Architects Planners

SUBDIRECTORY	.DGN LOCATOR	SHEET SCALE
	$FILENAME$	AS NOTED

STATE OF NEW HAMPSHIRE
DEPARTMENT OF TRANSPORTATION * BUREAU OF BRIDGE DESIGN

TOWN PORTSMOUTH, NH. - KITTERY, ME. BRIDGE NO. 247 \ 084 STATE PROJECT 13678F

LOCATION U.S. ROUTE 1 OVER PISCATAQUA RIVER

FIXED SPAN - TRUSS CHORD SPLICE DETAILS 1 OF 2

REVISIONS AFTER PROPOSAL		BY	DATE		BY	DATE
	DESIGNED	CSE	09/11	CHECKED	JN	09/11
	DRAWN	PRE	09/11	CHECKED	GT	09/11
	QUANTITIES	XX	XX/XX	CHECKED	XX	XX/XX
	ISSUE DATE		FEDERAL PROJECT NO.		SHEET NO.	
	REV. DATE					

BRIDGE SHEET B18 OF
FILE NUMBER 107-1-1
TOTAL SHEETS

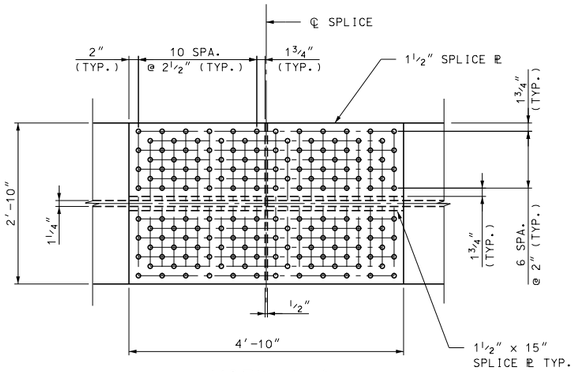

VIEW A-A

¾"= 1'-0"

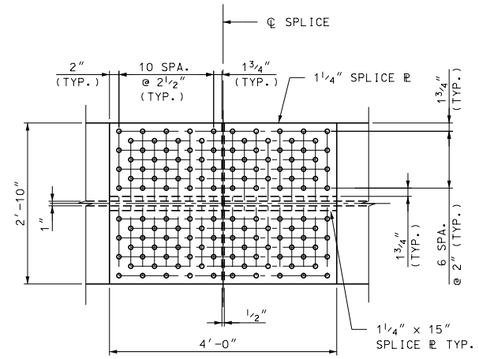

VIEW D-D

¾"= 1'-0"

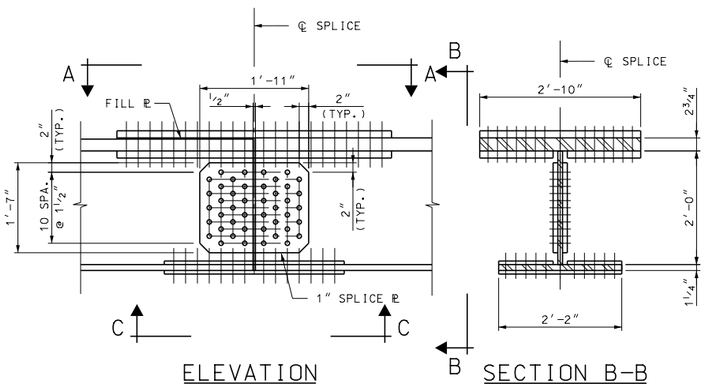

ELEVATION

¾"= 1'-0"

SECTION B-B

¾"= 1'-0"

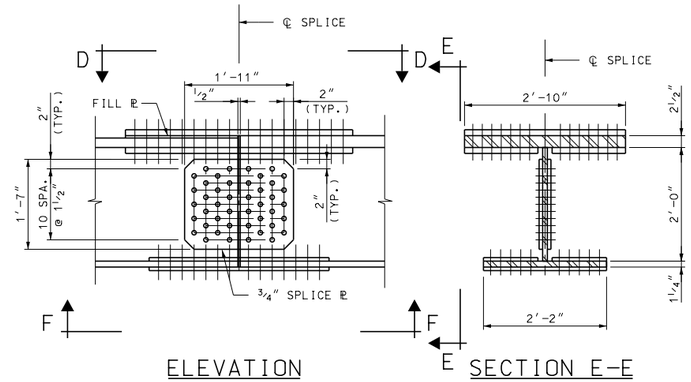

ELEVATION

¾"= 1'-0"

SECTION E-E

¾"= 1'-0"

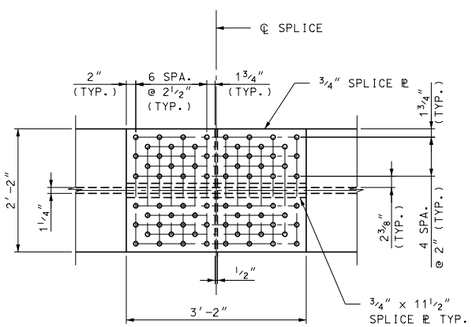

VIEW C-C

¾"= 1'-0"

FIXED SPAN TRUSS TOP CHORD SPLICE

TS2 AND TS3

¾"= 1'-0"

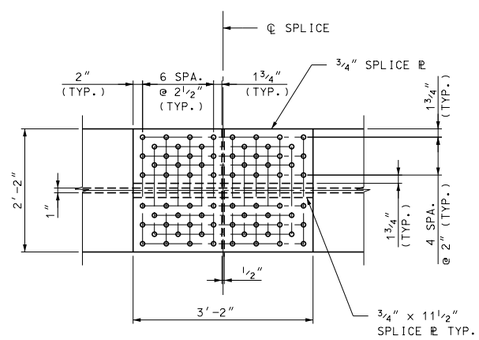

VIEW F-F

¾"= 1'-0"

FIXED SPAN TRUSS TOP CHORD SPLICE

TS1 AND TS4

¾"= 1'-0"

LEGEND:

TS(n) INDICATES TOP CHORD SPLICE LOCATION
BS(n) INDICATES BOTTOM CHORD SPLICE LOCATION

NOTES:

1. ALL STRUCTURAL STEEL SHALL BE AASHTO M270 GRADE 50 UNLESS NOTED OTHERWISE.
2. FOR LOCATIONS OF TRUSS CHORD SPLICES, SEE BRIDGE SHEET B1G.
3. ALL BOLTS SHALL BE ⅞" DIA. HIGH STRENGTH ASTM A325 AND SHALL BE GALVANIZED PER THE REQUIREMENT OF ASTM A153. NUTS AND WASHERS SHALL BE A563 AND F436 RESPECTIVELY, AND SHALL BE GALVANIZED PER THE REQUIREMENT OF ASTM A153. ALL BOLTS, NUTS, AND WASHERS SHALL CONFORM TO SECTION 550 OF THE NHDOT STANDARD SPECIFICATIONS FOR ROAD AND BRIDGE CONSTRUCTION.
4. ALL SPLICE PLATES SHALL BE SAME GRADE STEEL AS THE TRUSS CHORD.
5. FLANGE AND WEB SPLICE PLATES SHALL BE FURNISHED WITH THERMAL CUT EDGES AS PER SECTION 550 OF THE NHDOT STANDARD SPECIFICATION FOR ROAD AND BRIDGE CONSTRUCTION.

80% Submission
January 10, 2012

ARCHER WESTERN CONTRACTORS

HNTB
HNTB Corporation
The HNTB Companies
Engineers Architects Planners

STATE OF NEW HAMPSHIRE
DEPARTMENT OF TRANSPORTATION * BUREAU OF BRIDGE DESIGN

TOWN PORTSMOUTH, NH. - KITTERY, ME. BRIDGE NO. 247\084 STATE PROJECT 13678F

LOCATION U.S. ROUTE 1 OVER PISCATAQUA RIVER

FIXED SPAN - TRUSS CHORD SPLICE DETAILS 2 OF 2

BRIDGE SHEET B18A OF

REVISIONS AFTER PROPOSAL		BY	DATE		BY	DATE
	DESIGNED	CSE	09/11	CHECKED	JN	09/11
	DRAWN	PRE	09/11	CHECKED	GT	09/11
	QUANTITIES	XX	XX/XX	CHECKED	XX	XX/XX
	ISSUE DATE		FEDERAL PROJECT NO.		SHEET NO.	TOTAL SHEETS
	REV. DATE					

FILE NUMBER 107-1-1

SUBDIRECTORY	.DGN LOCATOR	SHEET SCALE
	$FILENAME$	AS NOTED

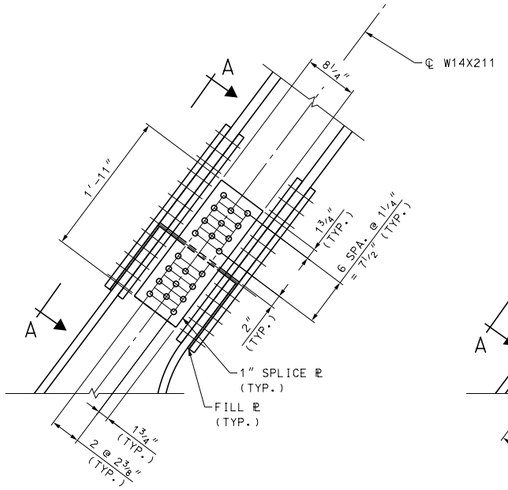

DETAIL 1
1"= 1'-0"

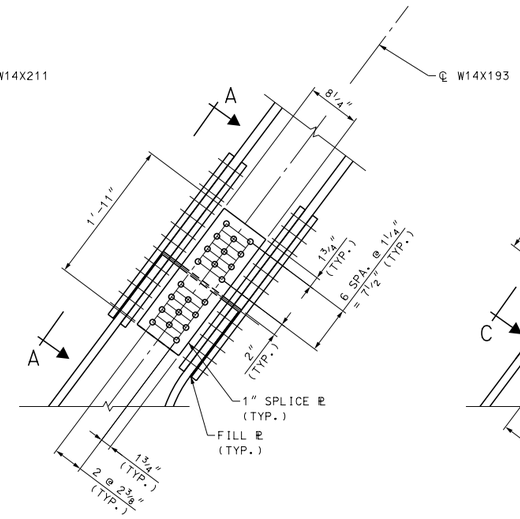

DETAIL 2
1"= 1'-0"

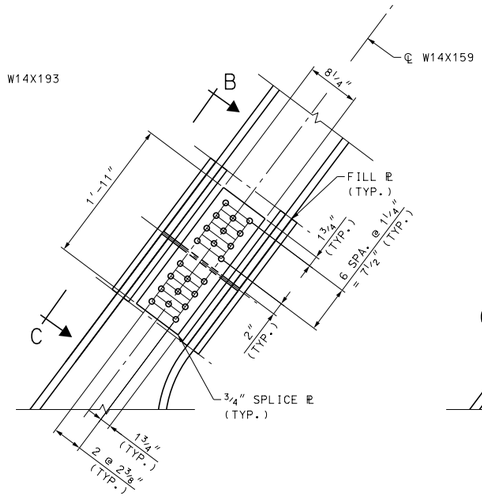

DETAIL 3
1"= 1'-0"

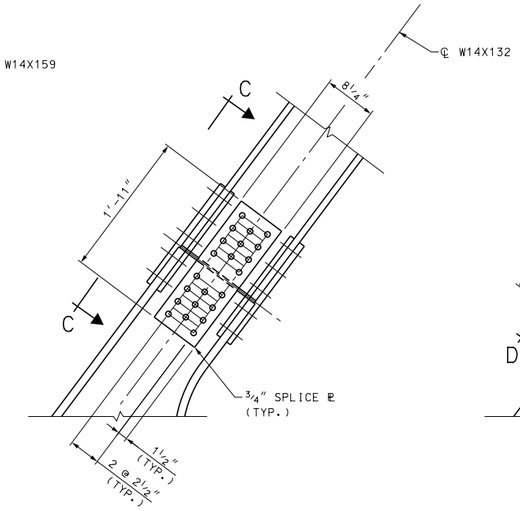

DETAIL 4
1"= 1'-0"

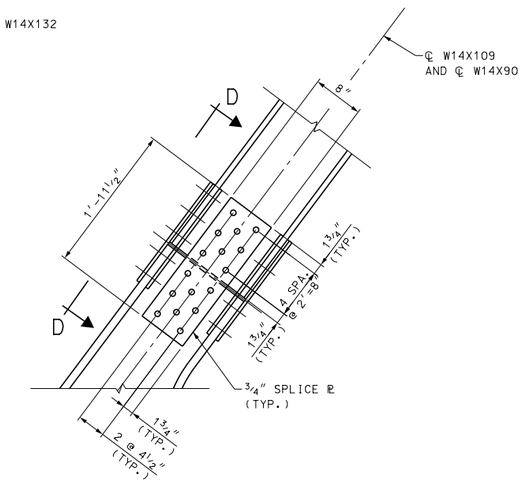

DETAIL 5
1"= 1'-0"

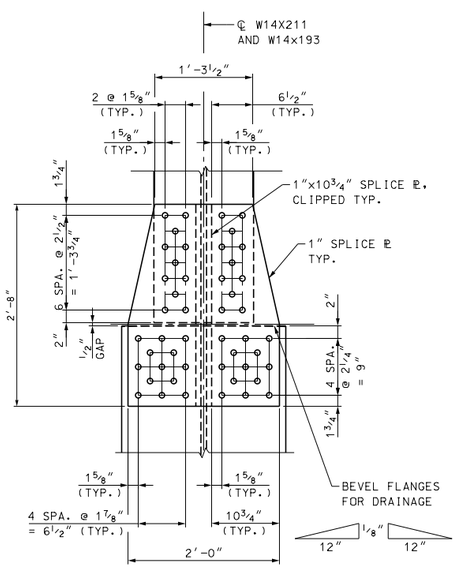

VIEW A-A
1"= 1'-0"

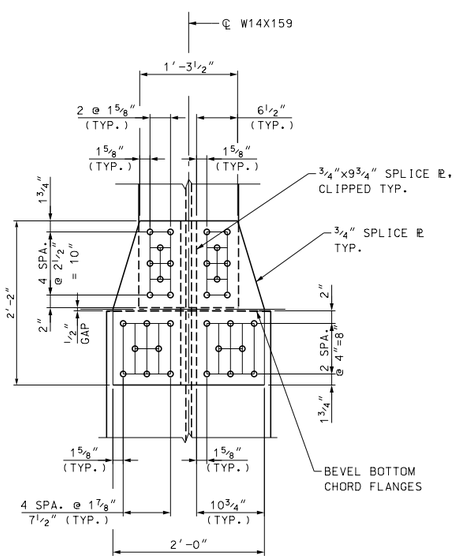

VIEW B-B
1"= 1'-0"

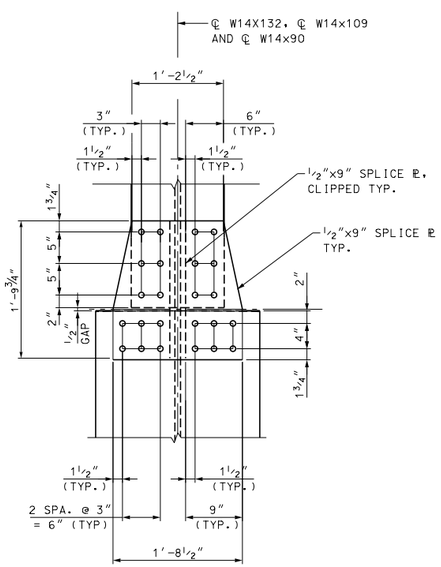

VIEW C-C
1"= 1'-0"

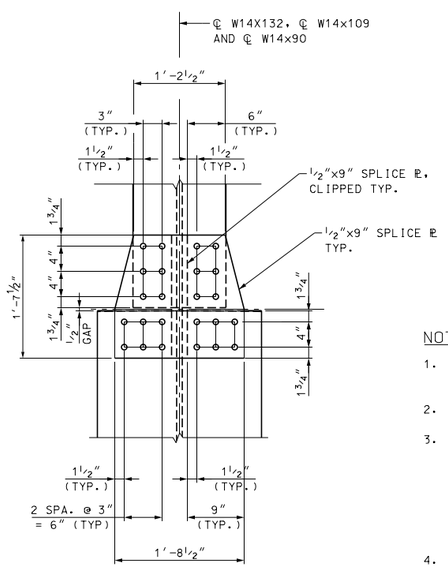

VIEW D-D
1"= 1'-0"

NOTES:

1. ALL STRUCTURAL STEEL SHALL BE AASHTO M270 GRADE 50 UNLESS NOTED OTHERWISE.
2. FOR LOCATIONS OF DETAILS 1 THRU 5, SEE BRIDGE SHEET B1G.
3. ALL BOLTS SHALL BE ⅞" DIA. HIGH STRENGTH ASTM A325 AND SHALL BE GALVANIZED PER THE REQUIREMENTS OF ASTM A153. NUTS AND WASHERS SHALL BE A563 AND F43G RESPECTIVELY, AND SHALL BE GALVANIZED PER REQUIREMENTS OF ASTM A153. ALL HOLES FOR ⅞" DIA. BOLTS SHALL BE 15/16" DIA. UNLESS NOTED OTHERWISE. ALL BOLTS, NUTS, AND WASHERS SHALL CONFORM TO SECTION 550 OF THE NHDOT STANDARD SPECIFICATIONS FOR ROAD AND BRIDGE CONSTRUCTION.
4. ALL SPLICE PLATES SHALL BE SAME GRADE STEEL AS THE TRUSS CHORD.
5. FLANGE AND WEB SPLICE PLATES SHALL BE FURNISHED WITH THERMAL CUT EDGES AS PER SECTION 550 OF THE NHDOT STANDARD SPECIFICATION FOR ROAD AND BRIDGE CONSTRUCTION

80% Submission
January 10, 2012

ARCHER WESTERN CONTRACTORS

HNTB
HNTB Corporation
The HNTB Companies
Engineers Architects Planners

SUBDIRECTORY	.DGN LOCATOR	SHEET SCALE
	$FILENAME$	1" = 1'-0"

STATE OF NEW HAMPSHIRE
DEPARTMENT OF TRANSPORTATION * BUREAU OF BRIDGE DESIGN

TOWN PORTSMOUTH, NH. - KITTERY, ME. BRIDGE NO. 247 \ 084 STATE PROJECT 13678F

LOCATION U.S. ROUTE 1 OVER PISCATAQUA RIVER

TRUSS DIAGONAL SPLICE DETAILS

REVISIONS AFTER PROPOSAL		BY	DATE		BY	DATE
	DESIGNED	TPZ	09/11	CHECKED	JN	09/11
	DRAWN	SPL	09/11	CHECKED	GT	09/11
	QUANTITIES	XX	XX/XX	CHECKED	XX	XX/XX
	ISSUE DATE		FEDERAL PROJECT NO.		SHEET NO.	
	REV. DATE					

BRIDGE SHEET B19 OF
FILE NUMBER 107-1-1
TOTAL SHEETS

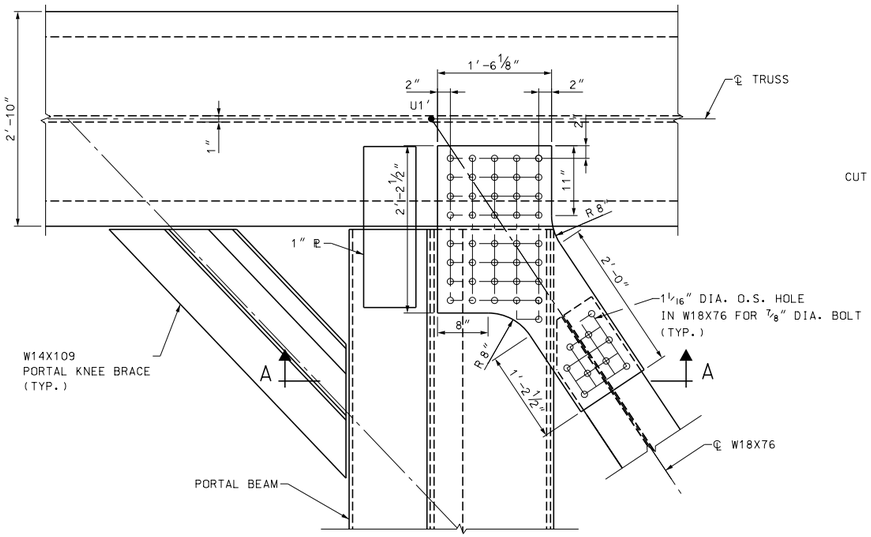

DETAIL 6
1"= 1'-0"

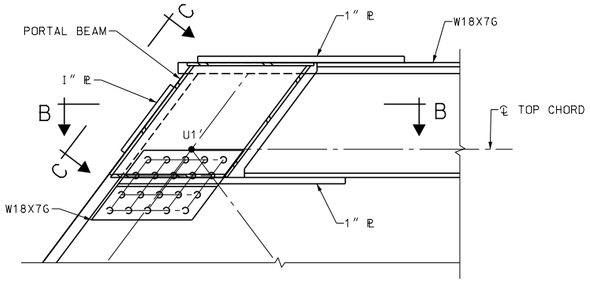

VIEW A-A
1"= 1'-0"

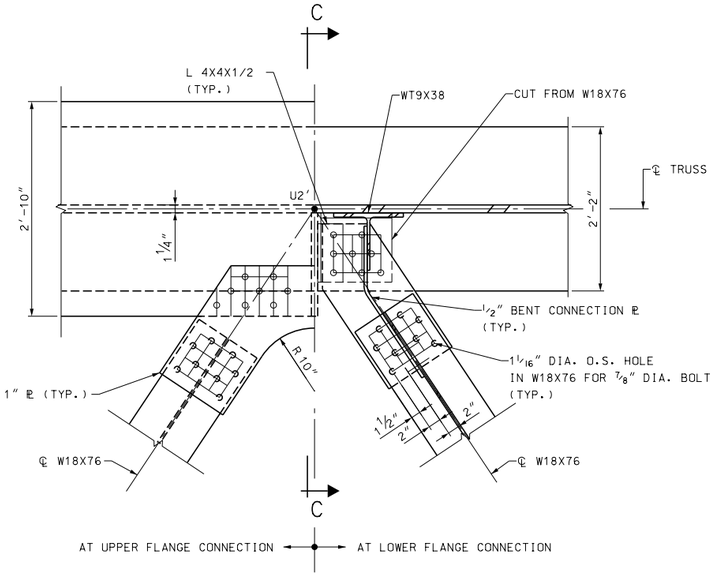

DETAIL 7
1"= 1'-0"

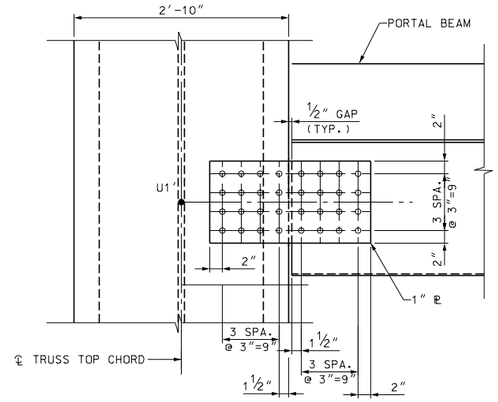

VIEW C-C
1"= 1'-0"

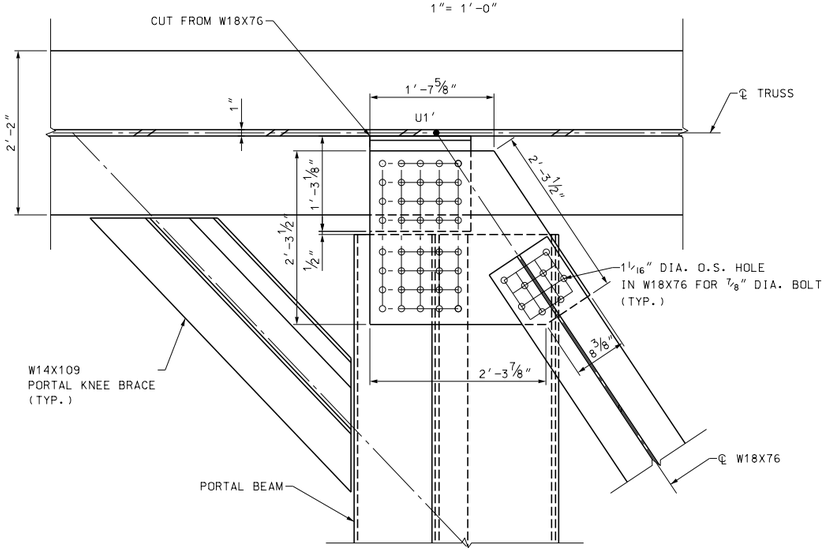

SECTION B-B
1"= 1'-0"

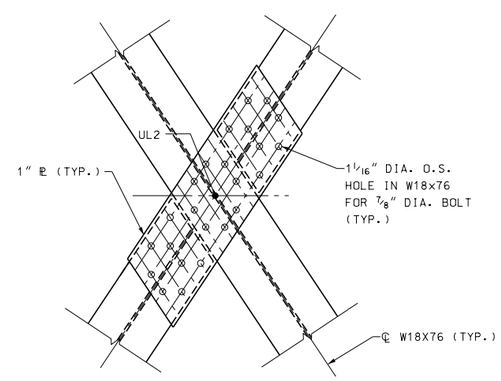

DETAIL 8
1"= 1'-0"

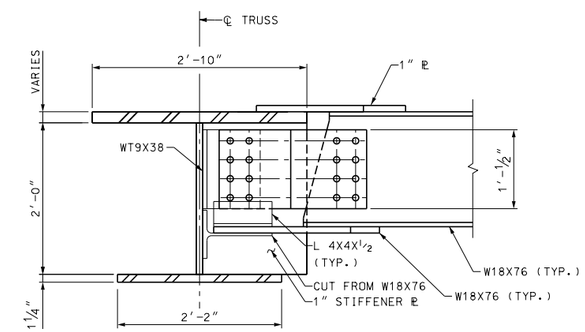

SECTION C-C
1"= 1'-0"

NOTES:

1. ALL STRUCTURAL STEEL SHALL BE AASHTO M270 GRADE 50 UNLESS NOTED OTHERWISE.
2. ALL CONNECTION PLATES SHALL BE SAME GRADE STEEL AS THE TRUSS CHORD.
3. ALL BOLTS SHALL BE 7/8" DIA. HIGH STRENGTH ASTM A325 AND SHALL BE GALVANIZED PER THE REQUIREMENTS OF ASTM A153. NUTS AND WASHERS SHALL BE A563 AND F436 RESPECTIVELY, AND SHALL BE GALVANIZED PER REQUIREMENTS OF ASTM A153. ALL HOLES FOR 7/8" DIA. BOLTS SHALL BE 15/16" DIA. UNLESS NOTED OTHERWISE. ALL BOLTS, NUTS, AND WASHERS SHALL CONFORM TO SECTION 550 OF THE NHDOT STANDARD SPECIFICATIONS FOR ROAD AND BRIDGE CONSTRUCTION.
4. FOR LOCATIONS OF DETAILS 6 THRU 8, SEE BRIDGE SHEET B16.
5. FOR PORTAL BEAM AND PORTAL KNEE BRACE DETAILS, SEE BRIDGE SHEET B16E.

LEGEND:

L(n)	INDICATES BOTTOM CHORD PANEL POINT
U(n)	INDICATES TOP CHORD PANEL POINT
UL(n)	INDICATES UPPER LATERAL PANEL POINT
TS(n)	INDICATES TOP CHORD SPLICE LOCATION
BS(n)	INDICATES BOTTOM CHORD SPLICE LOCATION

80% Submission
January 10, 2012

ARCHER WESTERN CONTRACTORS

HNTB
HNTB Corporation
The HNTB Companies
Engineers Architects Planners

STATE OF NEW HAMPSHIRE
DEPARTMENT OF TRANSPORTATION * BUREAU OF BRIDGE DESIGN

TOWN PORTSMOUTH, NH. - KITTERY, ME. BRIDGE NO. 247 \ 084 STATE PROJECT 13678F

LOCATION U.S. ROUTE 1 OVER PISCATAQUA RIVER

TYPICAL UPPER LATERAL CONN. DETAILS 1 OF 2

BRIDGE SHEET B20 OF

FILE NUMBER 107-1-1

REVISIONS AFTER PROPOSAL	BY	DATE		BY	DATE
DESIGNED	JN	09/11	CHECKED	TPZ	09/11
DRAWN	SPL	09/11	CHECKED	GT	09/11
QUANTITIES	XX	XX/XX	CHECKED	XX	XX/XX

SUBDIRECTORY	.DGN LOCATOR	SHEET SCALE	ISSUE DATE	FEDERAL PROJECT NO.	SHEET NO.	TOTAL SHEETS
	$FILENAME$	1" = 1'-0"	REV. DATE			

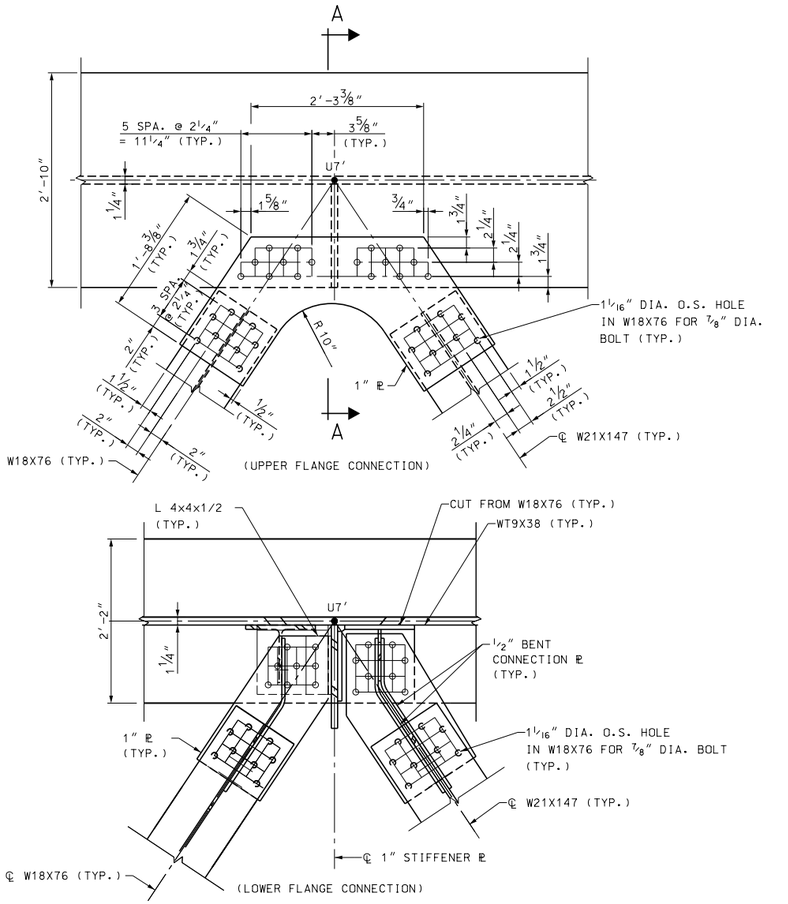

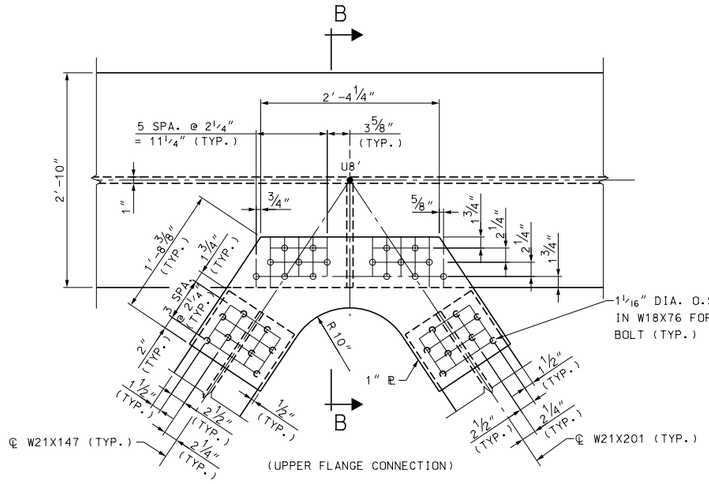

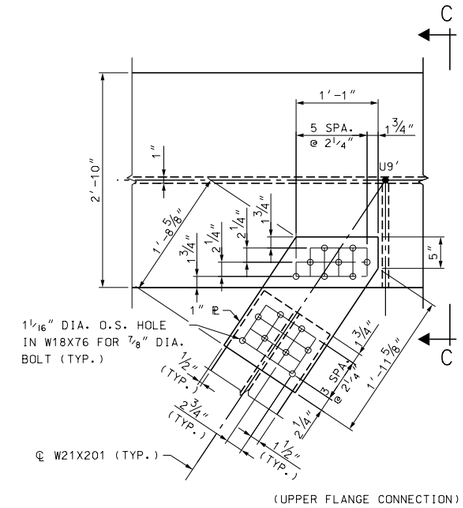

DETAIL 9
1"= 1'-0"

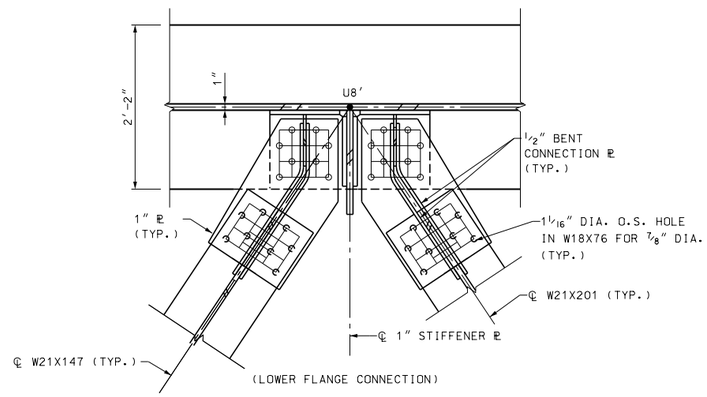

DETAIL 10
1"= 1'-0"

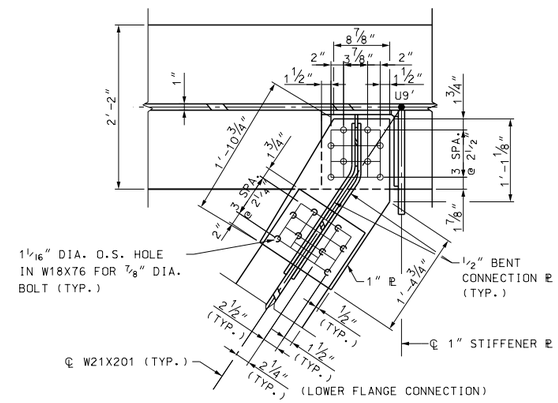

DETAIL 11
1"= 1'-0"

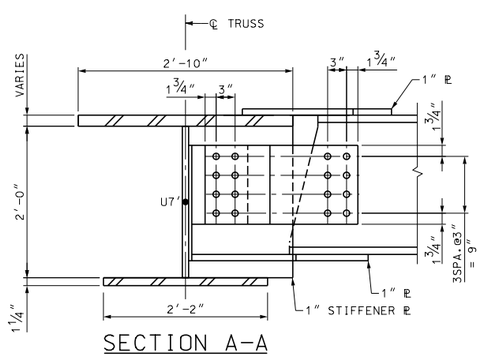

SECTION A-A
1"= 1'-0"

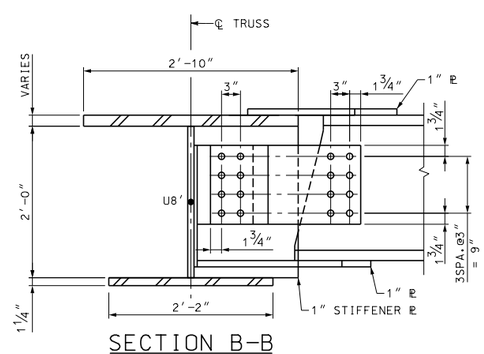

SECTION B-B
1"= 1'-0"

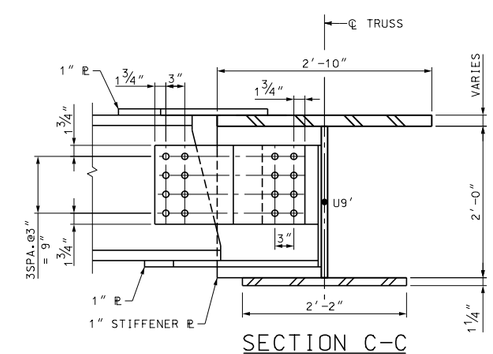

SECTION C-C
1"= 1'-0"

NOTES:

1. ALL STRUCTURAL STEEL SHALL BE AASHTO M270 GRADE 50 UNLESS NOTED OTHERWISE.
2. ALL BOLTS SHALL BE 7/8" DIA. HIGH STRENGTH ASTM A325 AND SHALL BE GALVANIZED PER THE REQUIREMENTS OF ASTM A153. NUTS AND WASHERS SHALL BE A563 AND F436 RESPECTIVELY, AND SHALL BE GALVANIZED PER REQUIREMENTS OF ASTM A153. ALL HOLES FOR 7/8" DIA. BOLTS SHALL BE 15/16" DIA. UNLESS NOTED OTHERWISE.ALL BOLTS, NUTS, AND WASHERS SHALL CONFORM TO SECTION 550 OF THE NHDOT STANDARD SPECIFICATIONS FOR ROAD AND BRIDGE CONSTRUCTION.
3. FOR LOCATIONS OF DETAILS 6 THRU 8, SEE BRIDGE SHEET B16.
4. ALL CONNECTION PLATES SHALL BE SAME GRADE STEEL AS THE TRUSS CHORD.

LEGEND:

L(n)	INDICATES BOTTOM CHORD PANEL POINT
U(n)	INDICATES TOP CHORD PANEL POINT
UL(n)	INDICATES UPPER LATERAL PANEL POINT
TS(n)	INDICATES TOP CHORD SPLICE LOCATION
BS(n)	INDICATES BOTTOM CHORD SPLICE LOCATION

80% Submission
January 10, 2012

ARCHER WESTERN CONTRACTORS

HNTB
HNTB Corporation
The HNTB Companies
Engineers Architects Planners

STATE OF NEW HAMPSHIRE
DEPARTMENT OF TRANSPORTATION * BUREAU OF BRIDGE DESIGN

TOWN PORTSMOUTH, NH. - KITTERY, ME. BRIDGE NO. 247 \ 084 STATE PROJECT 13678F

LOCATION U.S. ROUTE 1 OVER PISCATAQUA RIVER

TYPICAL UPPER LATERAL CONN. DETAILS 1 OF 2

BRIDGE SHEET B20A OF

REVISIONS AFTER PROPOSAL	BY	DATE		BY	DATE
DESIGNED	JN	09/11	CHECKED	TPZ	09/11
DRAWN	SPL	09/11	CHECKED	GT	09/11
QUANTITIES	XX	XX/XX	CHECKED	XX	XX/XX

FILE NUMBER 107-1-1

SUBDIRECTORY	.DGN LOCATOR	SHEET SCALE
	$FILENAME$	1" = 1'-0"

ISSUE DATE
REV. DATE
FEDERAL PROJECT NO.
SHEET NO.
TOTAL SHEETS

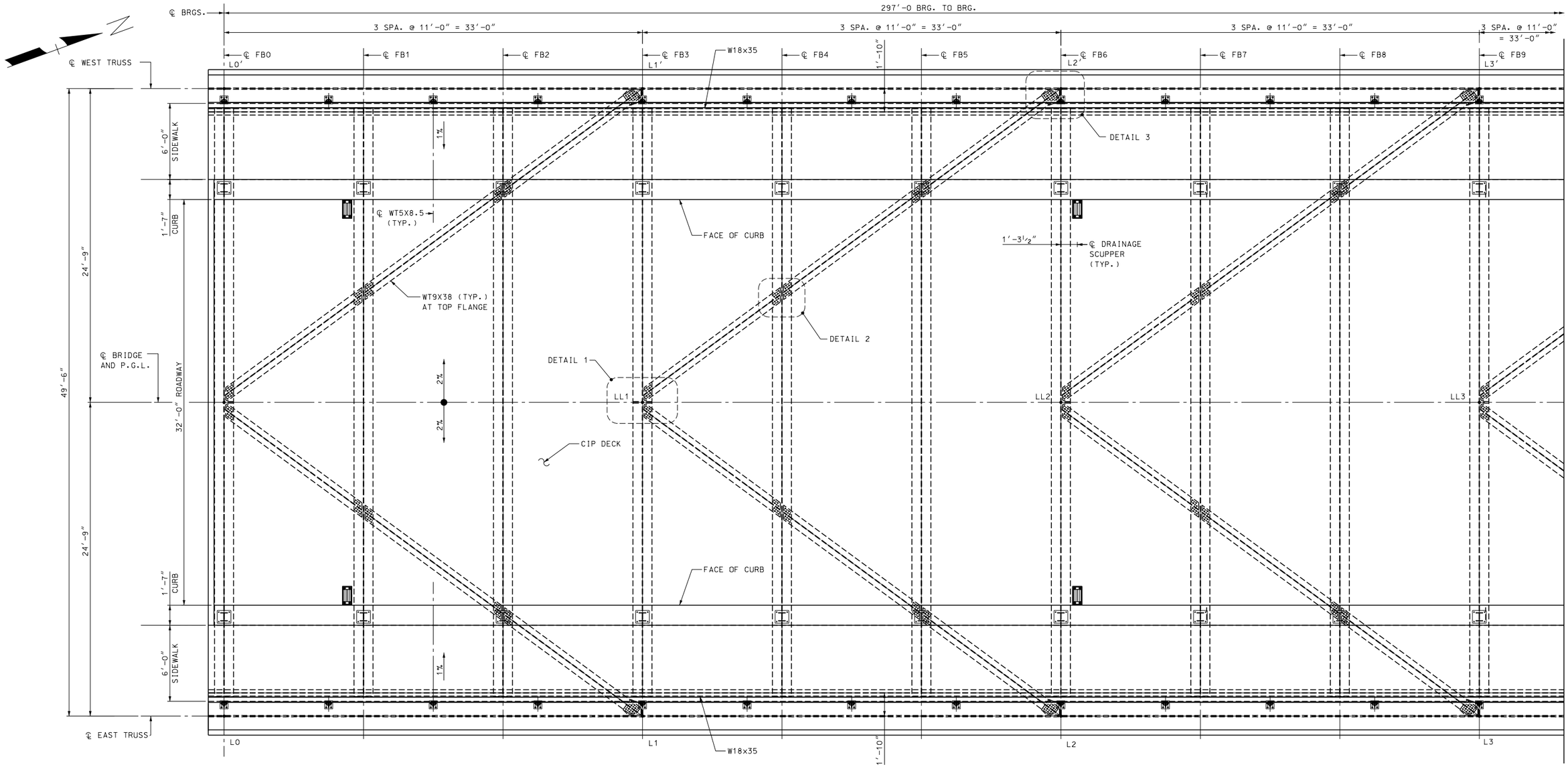

SOUTH FIXED SPAN - PARTIAL DECK PLAN - 1

(NORTH FIXED SPAN, OPP. HAND)

¼" = 1'-0"

NOTES:

1. PANEL POINT NUMBERS WITH A PRIME SYMBOL DESIGNATE PANELS LOCATED ON THE WEST FASCIA OF THE STRUCTURE.
2. FOR EXPANSION JOINT DETAILS SEE BRIDGE SHEETS B2G.
3. FOR SIDEWALK DETAILS, SEE BRIDGE SHEET BG1.
4. FOR TYPICAL FIXED SPAN DECK CROSS SECTION, SEE BRIDGE SHEET B15.
5. FOR DRAINAGE SCUPPER DETAILS, SEE BRIDGE SHEET B27.
6. FOR TRAFFIC SIGNAL SUPPORT DETAILS, SEE BRIDGE SHEETS BXX AND BXX.
7. FOR WARNING GATE SUPPORT DETAILS, SEE BRIDGE SHEET BXX AND BXX.
8. FOR DETAILS 1 THRU 3, SEE BRIDGE SHEET B25.

LEGEND:

L (n)	INDICATES BOTTOM CHORD PANEL POINT
FB (n)	INDICATES FLOORBEAM NUMBER
LL (n)	INDICATES LOWER LATERAL PANEL POINT

80% Submission
January 10, 2012

ARCHER WESTERN CONTRACTORS

HNTB
HNTB Corporation
The HNTB Companies
Engineers Architects Planners

SUBDIRECTORY	.DGN LOCATOR	SHEET SCALE
	$FILENAME$	1/4" = 1'-0"

STATE OF NEW HAMPSHIRE
DEPARTMENT OF TRANSPORTATION * BUREAU OF BRIDGE DESIGN

TOWN PORTSMOUTH, NH. - KITTERY, ME. BRIDGE NO. 247 \ 084 STATE PROJECT 13678F

LOCATION U.S. ROUTE 1 OVER PISCATAQUA RIVER

FIXED SPAN - PARTIAL DECK PLAN 1 OF 3

REVISIONS AFTER PROPOSAL		BY	DATE		BY	DATE
	DESIGNED	JN	09/11	CHECKED	TPZ	09/11
	DRAWN	SPL	09/11	CHECKED	GT	09/11
	QUANTITIES	XX	XX/XX	CHECKED	XX	XX/XX
	ISSUE DATE		FEDERAL PROJECT NO.		SHEET NO.	
	REV. DATE					

BRIDGE SHEET B22 OF

FILE NUMBER 107-1-1

TOTAL SHEETS

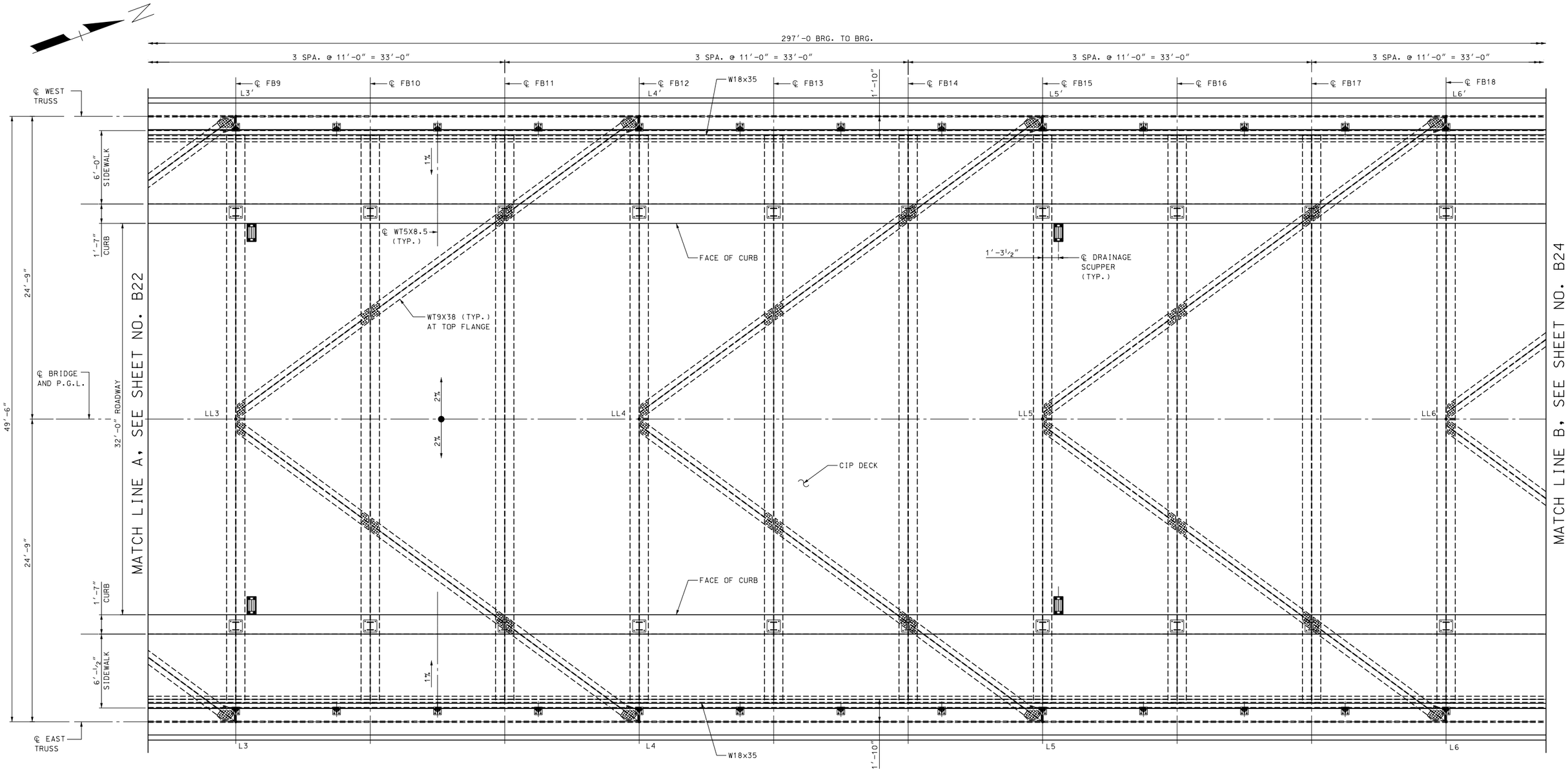

SOUTH FIXED SPAN – PARTIAL DECK PLAN – 2

(NORTH FIXED SPAN, OPP. HAND)
¼" = 1'-0"

NOTES:

1. PANEL POINT NUMBERS WITH A PRIME SYMBOL DESIGNATE PANELS LOCATED ON THE WEST FASCIA OF THE STRUCTURE.
2. FOR SIDEWALK DETAILS, SEE BRIDGE SHEET BG1.
3. FOR TYPICAL FIXED SPAN DECK CROSS SECTION, SEE BRIDGE SHEET B15.
4. FOR DRAINAGE SCUPPER DETAILS, SEE BRIDGE SHEET B27.
5. FOR TRAFFIC SIGNAL SUPPORT DETAILS, SEE BRIDGE SHEETS BXX AND BXX.
6. FOR WARNING GATE SUPPORT DETAILS, SEE BRIDGE SHEET BXX AND BXX.

LEGEND:

L (n)	INDICATES BOTTOM CHORD PANEL POINT
FB (n)	INDICATES FLOORBEAM NUMBER
LL (n)	INDICATES LOWER LATERAL PANEL POINT

80% Submission
January 10, 2012

ARCHER WESTERN CONTRACTORS

HNTB
HNTB Corporation
The HNTB Companies
Engineers Architects Planners

SUBDIRECTORY	.DGN LOCATOR	SHEET SCALE
	$FILENAME$	1/4" = 1'-0"

STATE OF NEW HAMPSHIRE
DEPARTMENT OF TRANSPORTATION * BUREAU OF BRIDGE DESIGN

TOWN PORTSMOUTH, NH. - KITTERY, ME. BRIDGE NO. 247 \ 084 STATE PROJECT 13678F

LOCATION U.S. ROUTE 1 OVER PISCATAQUA RIVER

FIXED SPAN - PARTIAL DECK PLAN 2 OF 3

BRIDGE SHEET B23 OF

FILE NUMBER 107-1-1

REVISIONS AFTER PROPOSAL		BY	DATE		BY	DATE
	DESIGNED	JN	09/11	CHECKED	TPZ	09/11
	DRAWN	SPL	09/11	CHECKED	GT	09/11
	QUANTITIES	XX	XX/XX	CHECKED	XX	XX/XX
	ISSUE DATE			FEDERAL PROJECT NO.		SHEET NO.
	REV. DATE					

TOTAL SHEETS

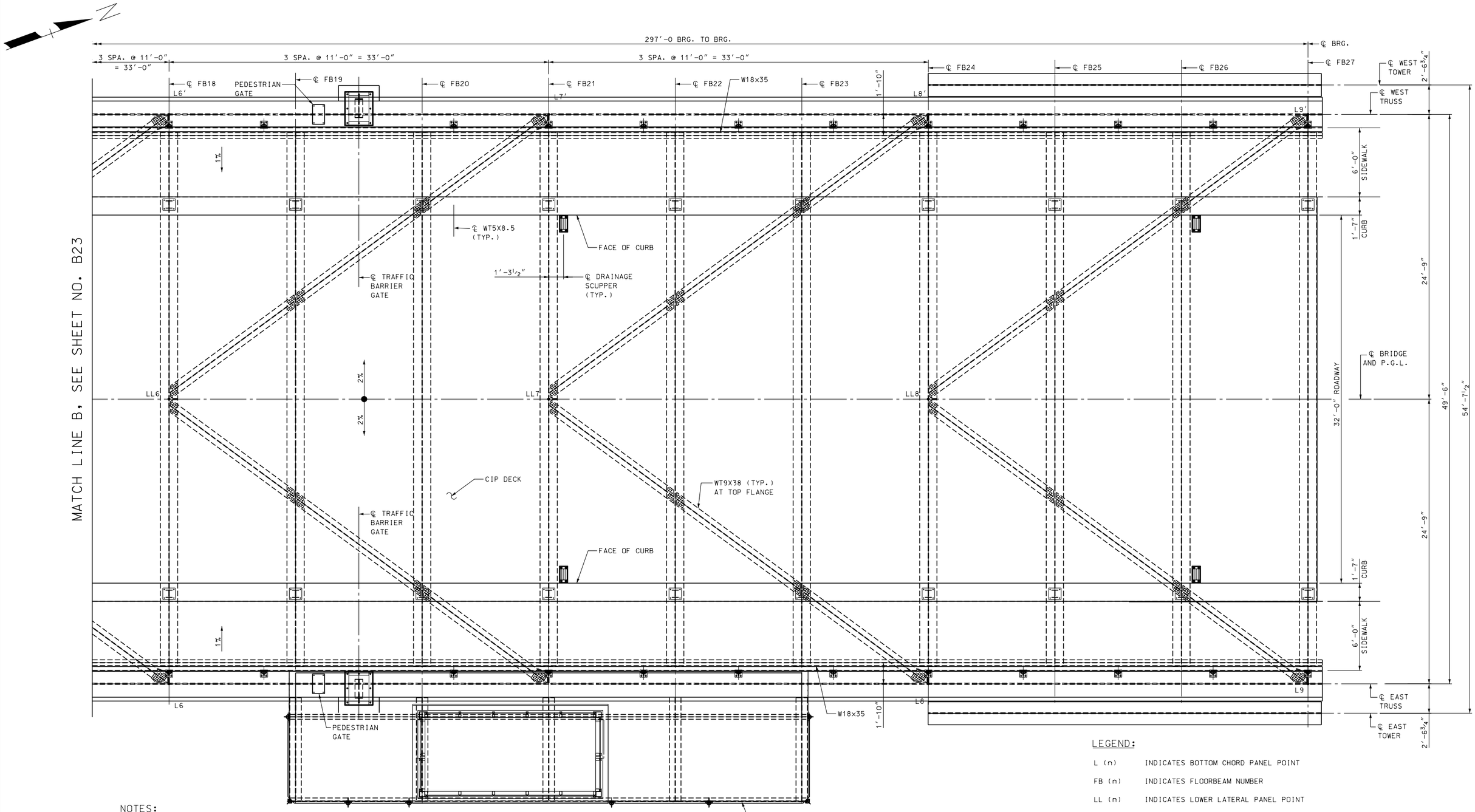

SOUTH FIXED SPAN – PARTIAL DECK PLAN – 3

(NORTH FIXED SPAN, OPP. HAND)

¼" = 1'-0"

LEGEND:

L (n)	INDICATES BOTTOM CHORD PANEL POINT
FB (n)	INDICATES FLOORBEAM NUMBER
LL (n)	INDICATES LOWER LATERAL PANEL POINT

NOTES:

1. PANEL POINT NUMBERS WITH A PRIME SYMBOL DESIGNATE PANELS LOCATED ON THE WEST FASCIA OF THE STRUCTURE.
2. FOR SIDEWALK DETAILS, SEE BRIDGE SHEET BG1.
3. FOR TYPICAL FIXED SPAN DECK CROSS SECTION, SEE BRIDGE SHEET B15.
4. FOR DRAINAGE SCUPPER DETAILS, SEE BRIDGE SHEET B275.
5. FOR TRAFFIC SIGNAL SUPPORT DETAILS, SEE BRIDGE SHEETS BXX AND BXX.
6. FOR WARNING GATE SUPPORT DETAILS, SEE BRIDGE SHEET BXX AND BXX.
7. FOR FIXED SPAN DECK ELEVATION TABLES, SEE BRIDGE SHEET B25.

80% Submission
January 10, 2012

ARCHER WESTERN CONTRACTORS

HNTB
HNTB Corporation
The HNTB Companies
Engineers Architects Planners

SUBDIRECTORY	.DGN LOCATOR	SHEET SCALE
	$FILENAME$	1/4" = 1'-0"

STATE OF NEW HAMPSHIRE
DEPARTMENT OF TRANSPORTATION * BUREAU OF BRIDGE DESIGN

TOWN PORTSMOUTH, NH. - KITTERY, ME. BRIDGE NO. 247 \ 084 STATE PROJECT 13678F

LOCATION U.S. ROUTE 1 OVER PISCATAQUA RIVER

FIXED SPAN - PARTIAL DECK PLAN 3 OF 3

REVISIONS AFTER PROPOSAL		BY	DATE		BY	DATE
	DESIGNED	JN	09/11	CHECKED	TPZ	09/11
	DRAWN	SPL	09/11	CHECKED	GT	09/11
	QUANTITIES	XX	XX/XX	CHECKED	XX	XX/XX
	ISSUE DATE		FEDERAL PROJECT NO.		SHEET NO.	
	REV. DATE					

BRIDGE SHEET B24 OF

FILE NUMBER 107-1-1

TOTAL SHEETS

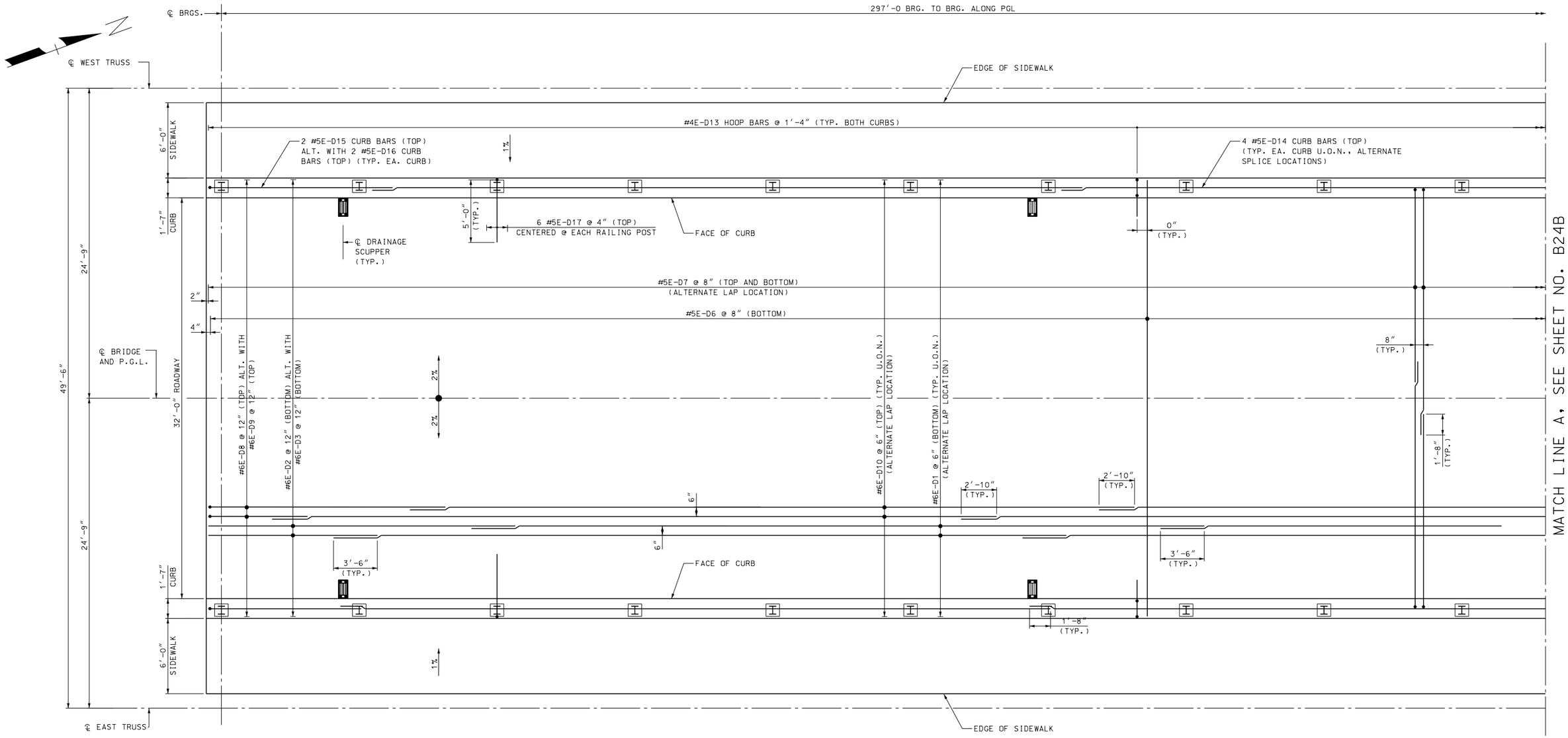

SOUTH FIXED SPAN - PARTIAL DECK PLAN - 1

(NORTH FIXED SPAN, OPP. HAND)

1/4" = 1'-0"

NOTES:

1. FOR EXPANSION JOINT DETAILS SEE BRIDGE SHEETS B2G.
2. FOR SIDEWALK DETAILS, SEE BRIDGE SHEET BG1.
3. FOR TYPICAL FIXED SPAN DECK CROSS SECTION, SEE BRIDGE SHEET B15.
4. FOR DRAINAGE SCUPPER DETAILS, SEE BRIDGE SHEET B27.
5. FOR FIXED SPAN DECK REINFORCING SCHEDULE, SEE BRIDGE SHEET B80.

80% Submission
January 10, 2012

ARCHER WESTERN CONTRACTORS

HNTB
HNTB Corporation
The HNTB Companies
Engineers Architects Planners

SUBDIRECTORY	.DGN LOCATOR	SHEET SCALE
	$FILENAME$	1/4" = 1'-0"

STATE OF NEW HAMPSHIRE
DEPARTMENT OF TRANSPORTATION * BUREAU OF BRIDGE DESIGN

TOWN PORTSMOUTH, NH. - KITTERY, ME. BRIDGE NO. 247 \ 084 STATE PROJECT 13678F

LOCATION U.S. ROUTE 1 OVER PISCATAQUA RIVER

FIXED SPAN - PARTIAL DECK REINF. PLAN -1 OF 3

BRIDGE SHEET B24A OF

REVISIONS AFTER PROPOSAL		BY	DATE		BY	DATE
	DESIGNED	JN	09/11	CHECKED	TPZ	09/11
	DRAWN	SPL	09/11	CHECKED	GT	09/11
	QUANTITIES	XX	XX/XX	CHECKED	XX	XX/XX
	ISSUE DATE		FEDERAL PROJECT NO.		SHEET NO.	TOTAL SHEETS
	REV. DATE					

FILE NUMBER 107-1-1

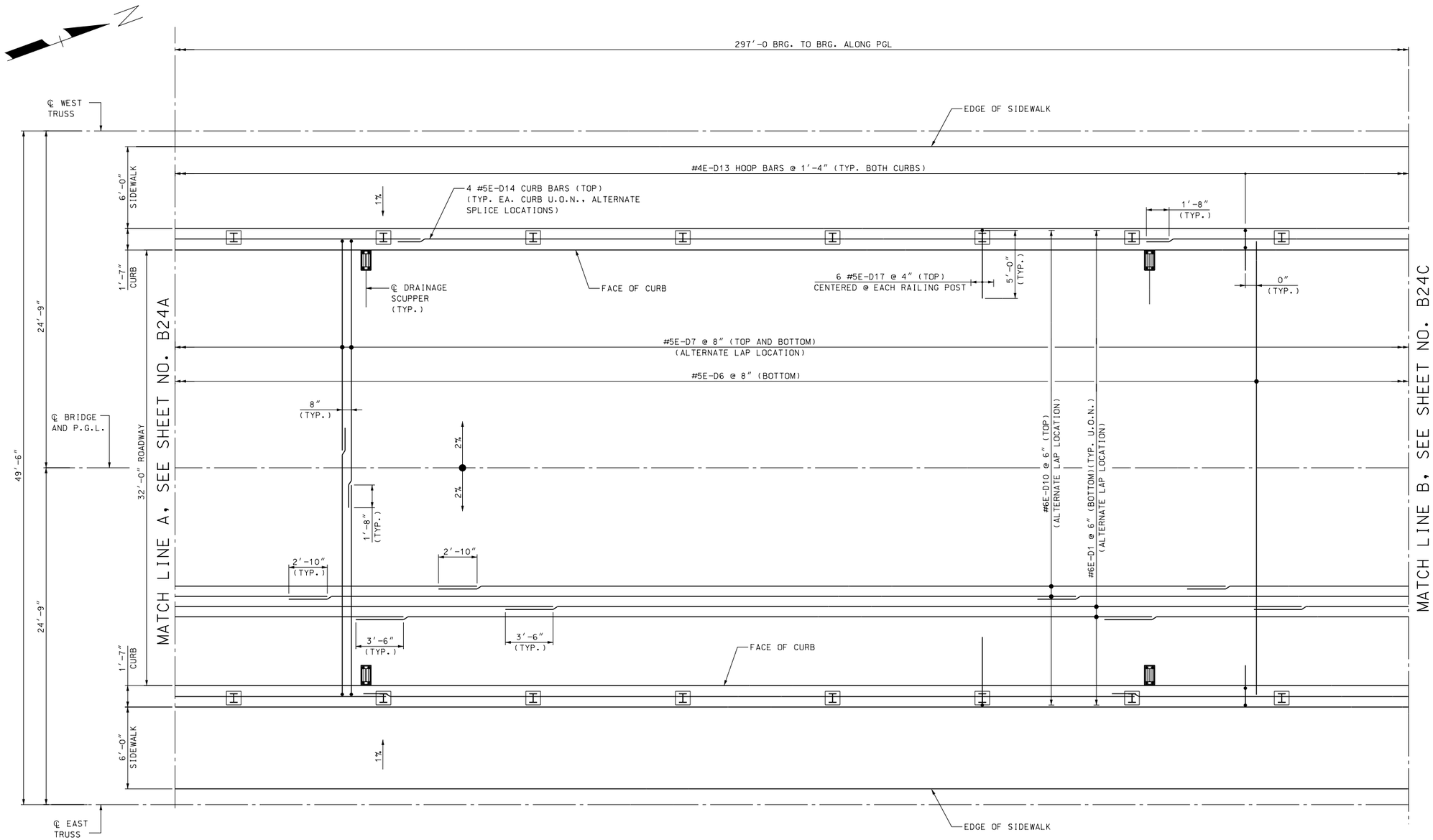

SOUTH FIXED SPAN – PARTIAL DECK PLAN – 2

(NORTH FIXED SPAN, OPP. HAND)
1/4" = 1'-0"

NOTES:

1. FOR SIDEWALK DETAILS, SEE BRIDGE SHEET BG1.
2. FOR TYPICAL FIXED SPAN DECK CROSS SECTION, SEE BRIDGE SHEET B15.
3. FOR DRAINAGE SCUPPER DETAILS, SEE BRIDGE SHEET B27.
4. FOR FIXED SPAN DECK REINFORCING SCHEDULE, SEE BRIDGE SHEET B80.

80% Submission
January 10, 2012

ARCHER WESTERN CONTRACTORS

HNTB
HNTB Corporation
The HNTB Companies
Engineers Architects Planners

SUBDIRECTORY	.DGN LOCATOR	SHEET SCALE
	$FILENAME$	1/4" = 1'-0"

STATE OF NEW HAMPSHIRE
DEPARTMENT OF TRANSPORTATION * BUREAU OF BRIDGE DESIGN

TOWN PORTSMOUTH, NH. - KITTERY, ME. BRIDGE NO. 247 \ 084 STATE PROJECT 13678F

LOCATION U.S. ROUTE 1 OVER PISCATAQUA RIVER

FIXED SPAN - PARTIAL DECK REINF. PLAN - 2 OF 3

BRIDGE SHEET B24B OF

REVISIONS AFTER PROPOSAL		BY	DATE		BY	DATE
	DESIGNED	JN	09/11	CHECKED	TPZ	09/11
	DRAWN	SPL	09/11	CHECKED	GT	09/11
	QUANTITIES	XX	XX/XX	CHECKED	XX	XX/XX

FILE NUMBER 107-1-1

ISSUE DATE | FEDERAL PROJECT NO. | SHEET NO. | TOTAL SHEETS

REV. DATE

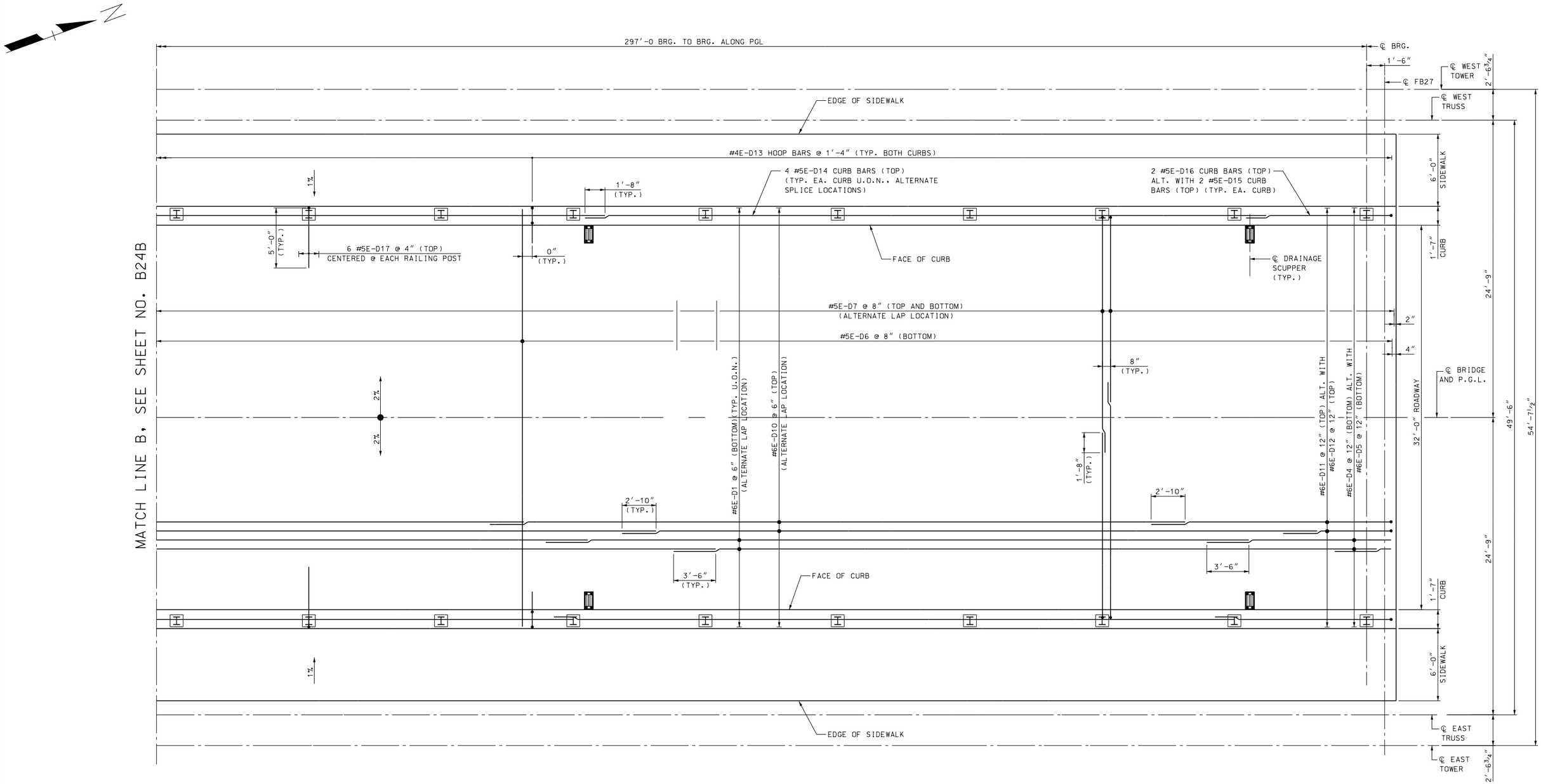

NOTES:

1. FOR SIDEWALK DETAILS, SEE BRIDGE SHEET BG1.
2. FOR TYPICAL FIXED SPAN DECK CROSS SECTION, SEE BRIDGE SHEET B15.
3. FOR DRAINAGE SCUPPER DETAILS, SEE BRIDGE SHEET B27.
4. FOR FIXED SPAN DECK REINFORCING SCHEDULE, SEE BRIDGE SHEET B80.

SOUTH FIXED SPAN - PARTIAL DECK PLAN - 3

(NORTH FIXED SPAN, OPP. HAND)

¼" = 1'-0"

80% Submission

January 10, 2012

ARCHER WESTERN CONTRACTORS

HNTB

HNTB Corporation
The HNTB Companies
Engineers Architects Planners

SUBDIRECTORY	.DGN LOCATOR	SHEET SCALE
	$FILENAME$	1/4" = 1'-0"

STATE OF NEW HAMPSHIRE

DEPARTMENT OF TRANSPORTATION * BUREAU OF BRIDGE DESIGN

TOWN PORTSMOUTH, NH. - KITTERY, ME. BRIDGE NO. 247 \ 084 STATE PROJECT 13678F

LOCATION U.S. ROUTE 1 OVER PISCATAQUA RIVER

FIXED SPAN - PARTIAL DECK REINF. PLAN - 3 OF 3

BRIDGE SHEET B24C OF

FILE NUMBER 107-1-1

REVISIONS AFTER PROPOSAL		BY	DATE		BY	DATE
	DESIGNED	JN	09/11	CHECKED	TPZ	09/11
	DRAWN	SPL	09/11	CHECKED	GT	09/11
	QUANTITIES	XX	XX/XX	CHECKED	XX	XX/XX
	ISSUE DATE		FEDERAL PROJECT NO.		SHEET NO.	TOTAL SHEETS
	REV. DATE					

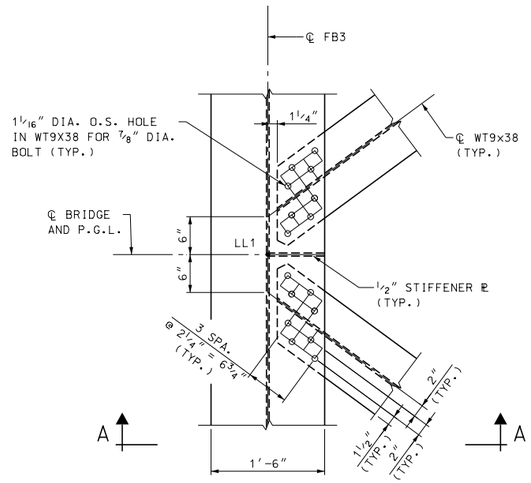

DETAIL 1
1"= 1'-0"

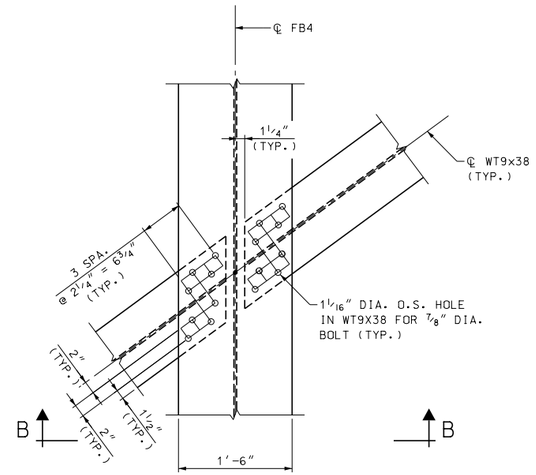

DETAIL 2
1"= 1'-0"

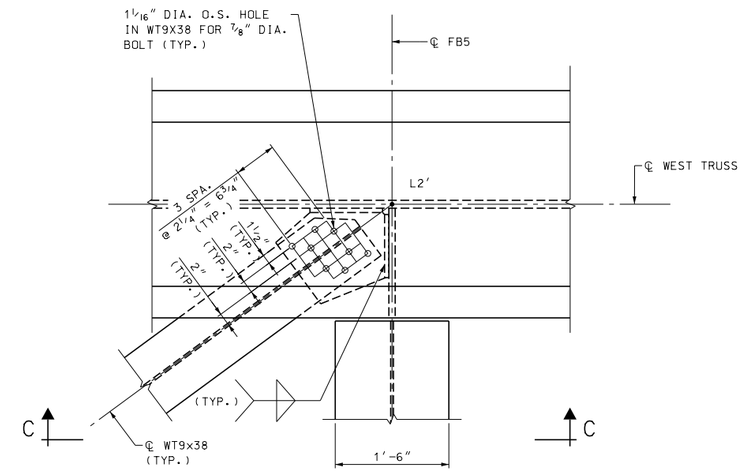

DETAIL 3
1"= 1'-0"

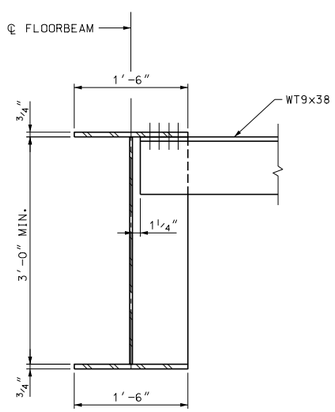

SSECTION A-A
1"= 1'-0"

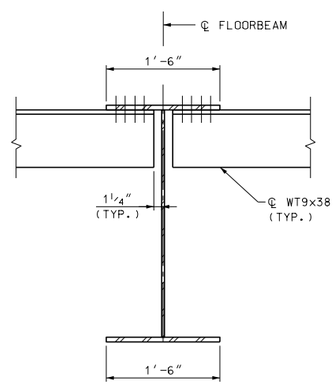

SECTION B-B
1"= 1'-0"

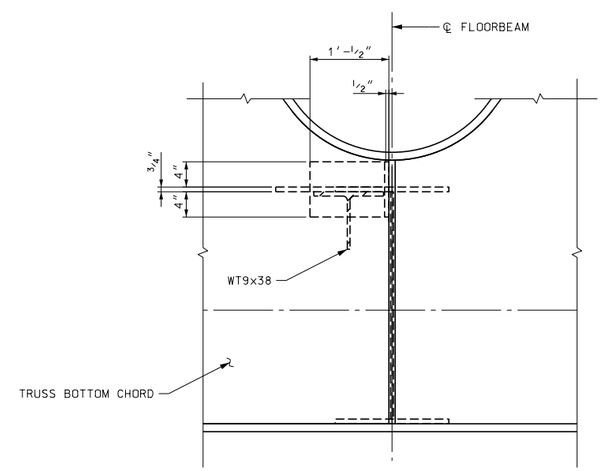

SECTION C-C
1"= 1'-0"

NOTES:

1. ALL STRUCTURAL STEEL AND CONNECTION PLATES SHALL BE AASHTO M270 GRADE 50 UNLESS NOTED OTHERWISE.

2. ALL BOLTS SHALL BE 7/8" DIA. HIGH STRENGTH ASTM A325 AND SHALL BE GALVANIZED PER THE REQUIREMENTS OF ASTM A153. NUTS AND WASHERS SHALL BE A563 AND F43G RESPECTIVELY, AND SHALL BE GALVANIZED PER REQUIREMENTS OF ASTM A153. ALL HOLES FOR 7/8" DIA. BOLTS SHALL BE 15/16" DIA. UNLESS NOTED OTHERWISE.ALL BOLTS, NUTS, AND WASHERS SHALL CONFORM TO SECTION 550 OF THE NHDOT STANDARD SPECIFICATIONS FOR ROAD AND BRIDGE CONSTRUCTION.

3. FOR LOCATION OF DETAILS 1 THRU 3, SEE BRIDGE SHEET B22.

LEGEND:

L(n) INDICATES BOTTOM CHORD PANEL POINT

FB(n) INDICATES FLOORBEAM NUMBER

80% Submission
January 10, 2012

ARCHER WESTERN CONTRACTORS

HNTB
HNTB Corporation
The HNTB Companies
Engineers Architects Planners

SUBDIRECTORY	.DGN LOCATOR	SHEET SCALE
	$FILENAME$	1" = 1'-0"

STATE OF NEW HAMPSHIRE
DEPARTMENT OF TRANSPORTATION * BUREAU OF BRIDGE DESIGN

TOWN PORTSMOUTH, NH. - KITTERY, ME. BRIDGE NO. 247\084 STATE PROJECT 13678F

LOCATION U.S. ROUTE 1 OVER PISCATAQUA RIVER

FIXED SPAN - LOWER LATERAL CONN. DETAILS

BRIDGE SHEET B25 OF

FILE NUMBER 107-1-1

REVISIONS AFTER PROPOSAL		BY	DATE		BY	DATE
	DESIGNED	JN	09/11	CHECKED	TPZ	09/11
	DRAWN	PRE	09/11	CHECKED	GT	09/11
	QUANTITIES	XX	XX/XX	CHECKED	XX	XX/XX
	ISSUE DATE		FEDERAL PROJECT NO.		SHEET NO.	TOTAL SHEETS
	REV. DATE					

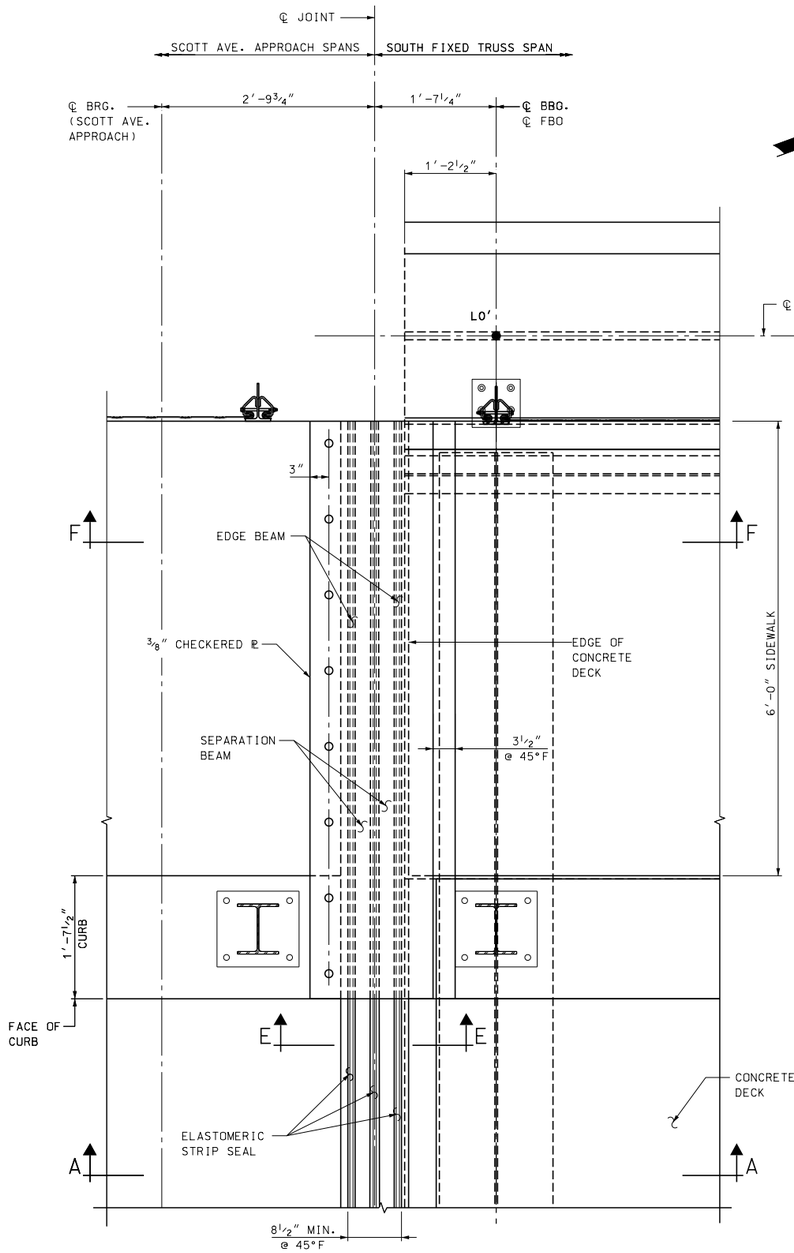

PARTIAL PLAN – STRIP SEAL JOINT AT PIER 1

1″ = 1′-0″

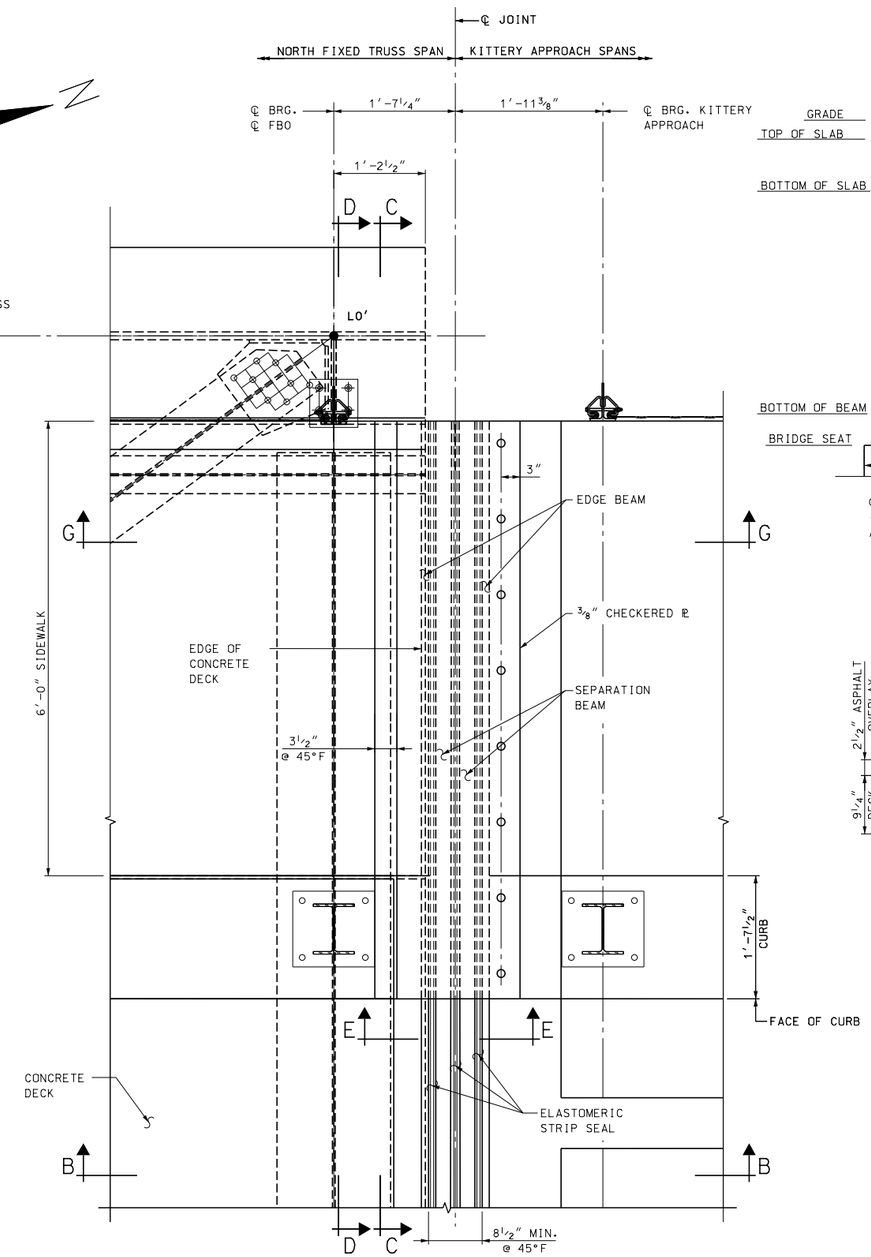

PARTIAL PLAN – STRIP SEAL JOINT AT PIER 4

1″ = 1′-0″

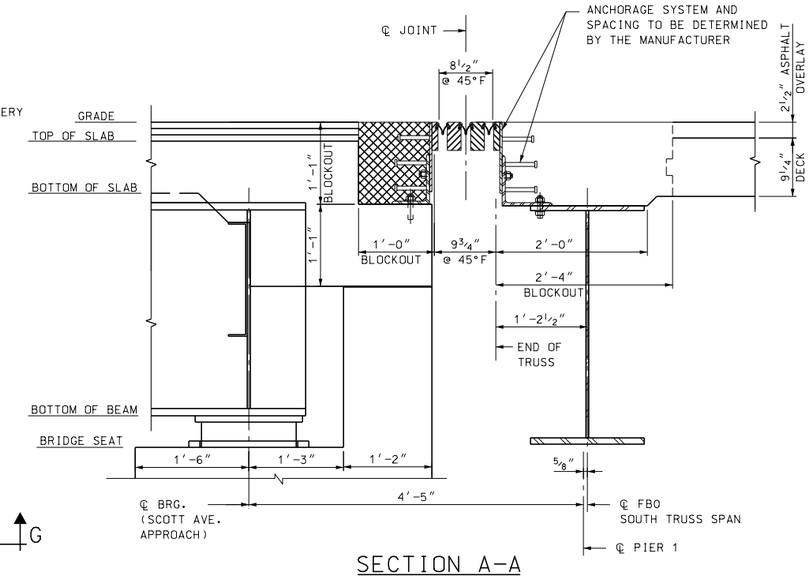

SECTION A-A

1″ = 1′-0″

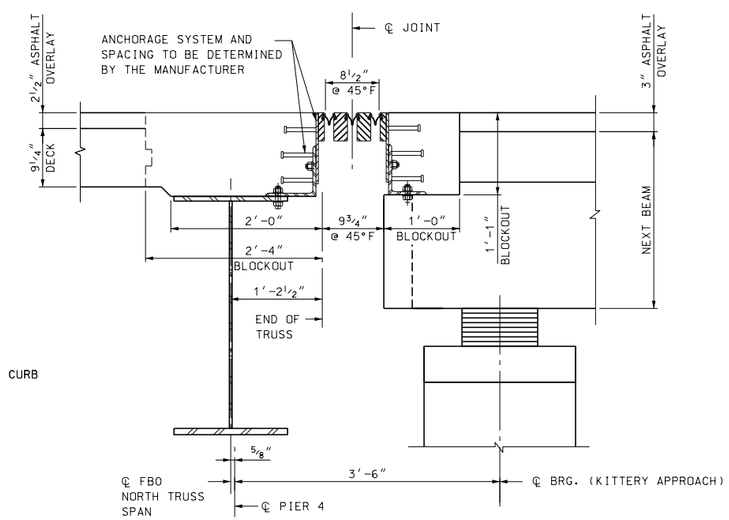

SECTION B-B

1″ = 1′-0″

NOTES:

1. THE CONTRACTOR SHALL VERIFY ALL DIMENSTIONS TO INSURE ACCURACY OF THE EXPANSION JOINT PRIOR TO FABRICATION.
2. AFTER FABRICATION, ALL ASSEMBLIES SHALL BE HOT-DIPPED GALVANIZED TO ASTM-A123.
3. FIELD SPLICES TO BE PLACED AT CROWN BREAKS.
4. CONTRACTOR TO FORM JOINT OPENING AS PRESCRIBED BY THE FIELD ENGINEER. SEE TEMPERATURE ADJUSTMENT TABLE ON BRIDGE SHEET BXX.
5. FOR SECTIONS C-C, D-D, E-E, F-F AND G-G, EDGE BEAM, SEPARATION BEAM, AND STRIP SEAL DETAILS, AND ADDITIONAL NOTES, SEE BRIDGE SHEET B26A.
6. THE ASSUMED DIMENSIONS OF THE BLOCKOUT (DEPTH AND WIDTH) PLACED ON THE PLANS ARE BASED ON WATSON BOWMAN ACME'S WABO MODULAR STM-900. IF THE JOINT SYSTEM SUPPLIED BY THE FABRICATOR/ CONTRACTOR REQUIRES A CHANGE TO THE BLOCKOUT SIZE OR SUPPORT SYSTEM DETAILED IN THE PLANS, THAT CHANGE TO THE BLOCKOUT OR SUPPORT SYSTEM SHALL BE THE CONTRACTOR'S RESPONSIBILITY.

80% Submission
January 10, 2012

ARCHER WESTERN CONTRACTORS

HNTB
HNTB Corporation
The HNTB Companies
Engineers Architects Planners

SUBDIRECTORY	.DGN LOCATOR	SHEET SCALE
	$FILENAME$	1" = 1'-0"

STATE OF NEW HAMPSHIRE
DEPARTMENT OF TRANSPORTATION * BUREAU OF BRIDGE DESIGN

TOWN PORTSMOUTH, NH. - KITTERY, ME. BRIDGE NO. 247 \ 084 STATE PROJECT 13678F

LOCATION U.S. ROUTE 1 OVER PISCATAQUA RIVER

EXPANSION JOINT DETAILS AT PIERS 1 AND 4

BRIDGE SHEET B26 OF

FILE NUMBER 107-1-1

REVISIONS AFTER PROPOSAL		BY	DATE		BY	DATE
	DESIGNED	CB	09/11	CHECKED	JN	09/11
	DRAWN	PRE	09/11	CHECKED	TPZ	09/11
	QUANTITIES	XX	XX/XX	CHECKED	XX	XX/XX

ISSUE DATE	FEDERAL PROJECT NO.	SHEET NO.	TOTAL SHEETS
REV. DATE			

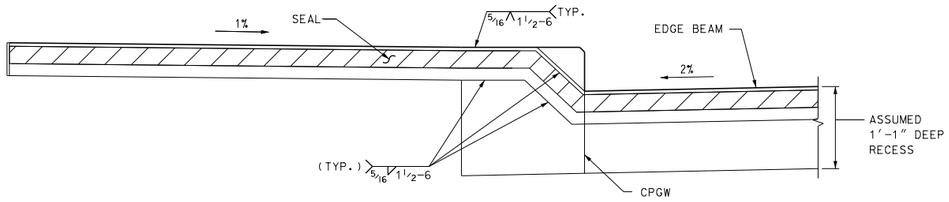

SECTION C-C (SIDEWALK)

1" = 1'-0"

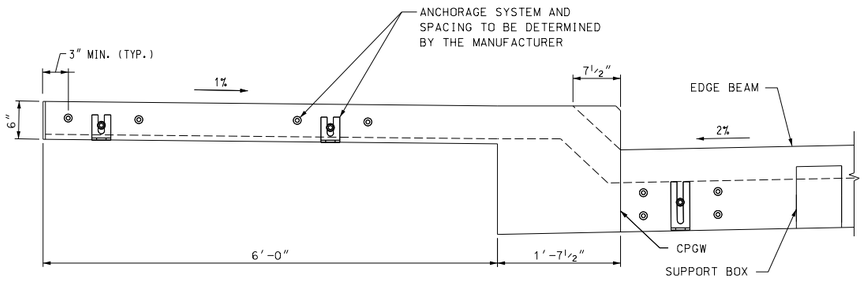

SECTION D-D (SIDEWALK)

(ONLY THE STEEL SHOWN)
1" = 1'-0"

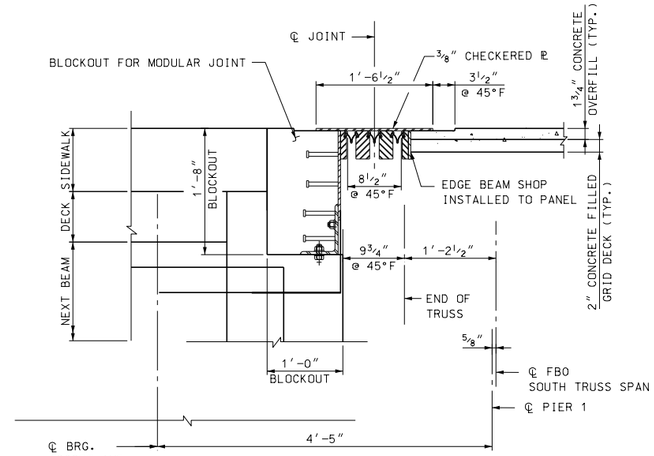

SECTION F-F

1" = 1'-0"

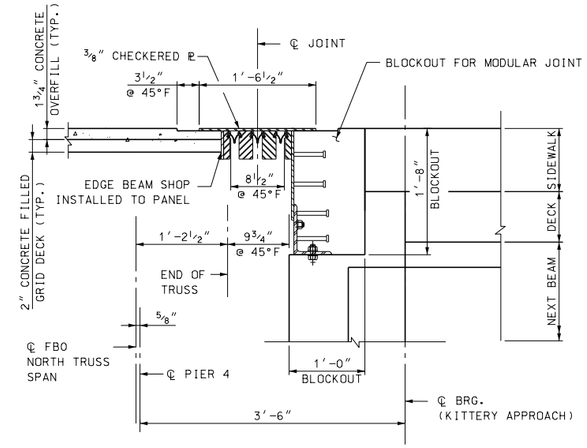

SECTION G-G

1" = 1'-0"

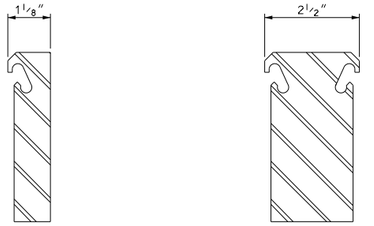

EDGE BEAM FOR STRIP SEAL

N.T.S.

SEPARATION BEAM FOR STRIP SEAL

N.T.S.

STRIP SEAL

N.T.S.

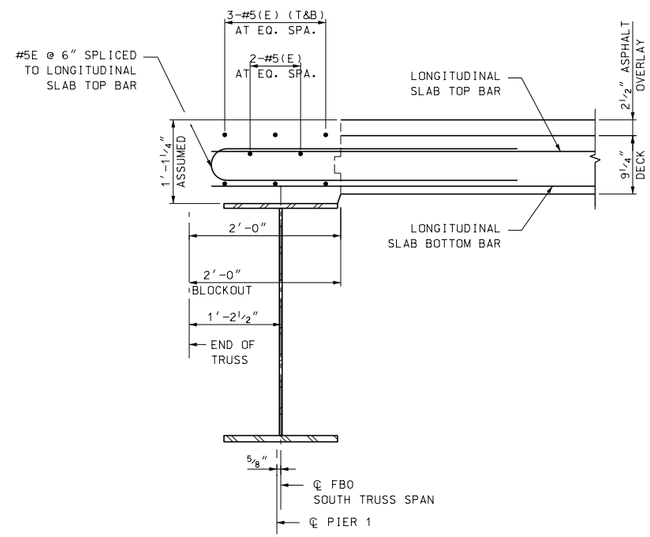

DETAIL FOR MUTLI-CELL MODULAR JOINT AT SOUTH TRUSS SPAN

1" = 1'-0"

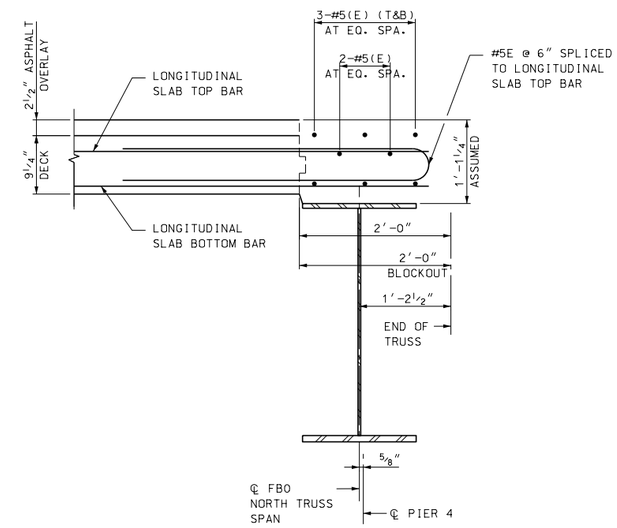

DETAIL FOR MULTI-CELL MODULAR JOINT AT NORTH TRUSS SPAN

1" = 1'-0"

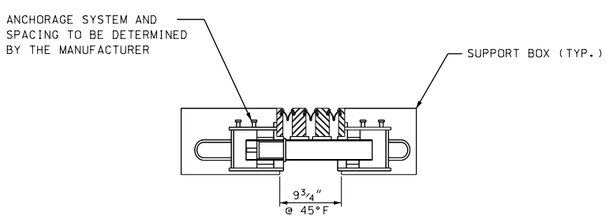

SECTION E-E

(HEADER ONLY SHOWN FOR CLARITY)
1" = 1'-0"

NOTES:

1. IT IS DESIRABLE TO HAVE THE MODULAR JOINT WITH ITS SEAL ASSEMBLED IN THE SHOP AND DELIVERED TO THE JOB SITE ALL SET FOR INSTALLATION IN ITS PREFORMED RECESS IN THE STRUCTURAL SLAB. IN CASES WHERE THE JOINT CANNOT BE ASSEMBLED IN THE SHOP, DUE TO ITS EXCESSIVE LENGTH CAUSING SHIPPING PROBLEMS, THE JOINT SHALL HAVE THE SEAL IN PLACE BEFORE THE STRUCTURE IS OPENED TO TRAFFIC, INCLUDING CONSTRUCTION TRAFFIC, AND BEFORE DISCONTINUING OPERATION WHEN WORK IS SUSPENDED DURING THE WINTER.

2. MODULAR JOINT SHOWN IS FOR ILLUSTRATIVE PURPOSES ONLY. ACTUAL JOINT SUPPLIED MAY VARY SIGNIFICANTLY FROM THE ONE SHOWN HERE. IT IS THE CONTRACTOR'S RESPONSIBILITY TO ADJUST ALL REQUIRED DIMENSIONS IN THE FIELD, BASED ON FIELD VERIFIED DIMENSIONS, TO ACCOMODATE THE ACTUAL MODULAR JOINT SUPPLIED.

3. FOR THE LOCATION OF SECTIONS C-C, D-D, E-E, F-F, AND G-G, SEE BRIDGE SHEET B26.

80% Submission
January 10, 2012

ARCHER WESTERN CONTRACTORS

HNTB
HNTB Corporation
The HNTB Companies
Engineers Architects Planners

STATE OF NEW HAMPSHIRE
DEPARTMENT OF TRANSPORTATION * BUREAU OF BRIDGE DESIGN

TOWN PORTSMOUTH, NH. - KITTERY, ME. BRIDGE NO. 247 \ 084 STATE PROJECT 13678F

LOCATION U.S. ROUTE 1 OVER PISCATAQUA RIVER

EXPANSION JOINT DETAILS AT PIERS 1 AND 4

BRIDGE SHEET B26A OF

REVISIONS AFTER PROPOSAL		BY	DATE		BY	DATE
	DESIGNED	CB	09/11	CHECKED	JN	09/11
	DRAWN	PRE	09/11	CHECKED	TPZ	09/11
	QUANTITIES	XX	XX/XX	CHECKED	XX	XX/XX

FILE NUMBER 107-1-1

SUBDIRECTORY	.DGN LOCATOR	SHEET SCALE	ISSUE DATE	FEDERAL PROJECT NO.	SHEET NO.	TOTAL SHEETS
	$FILENAME$	1" = 1'-0"	REV. DATE			

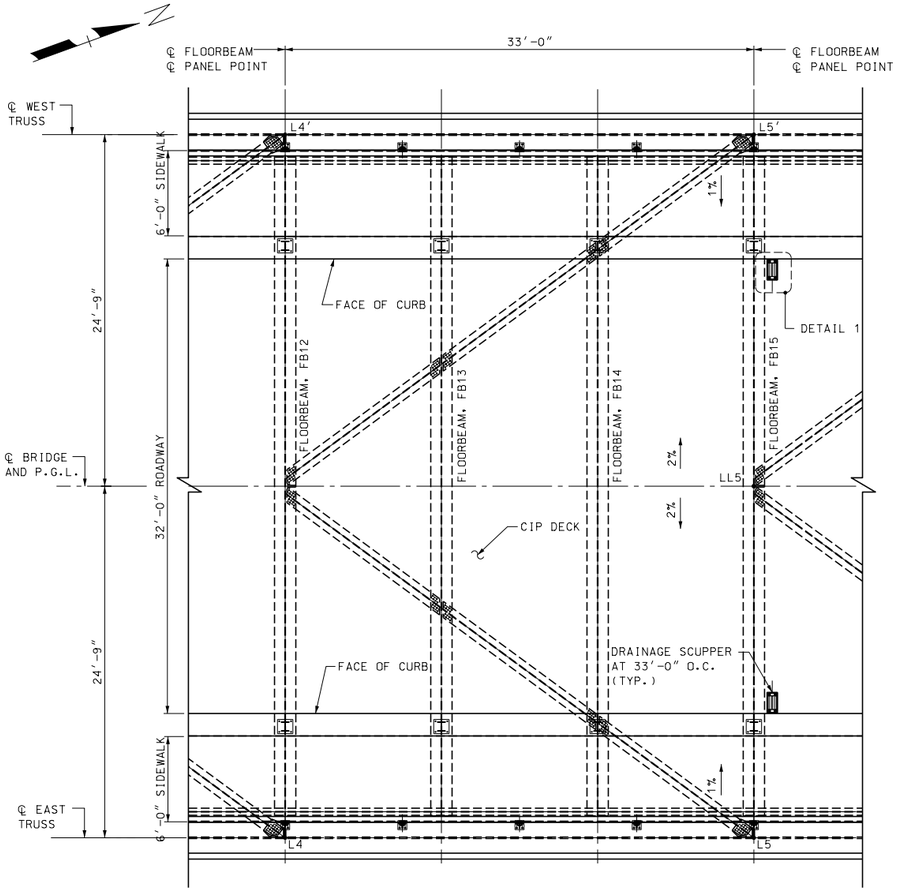

PARTIAL DECK PLAN

3/16″ = 1′-0″

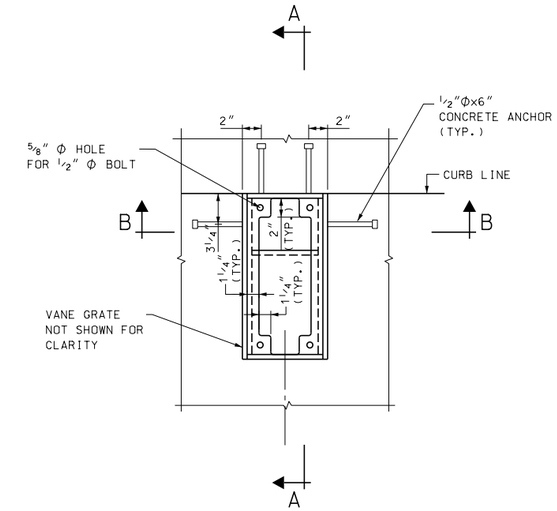

DETAIL 1

1 1/2″ = 1′-0″

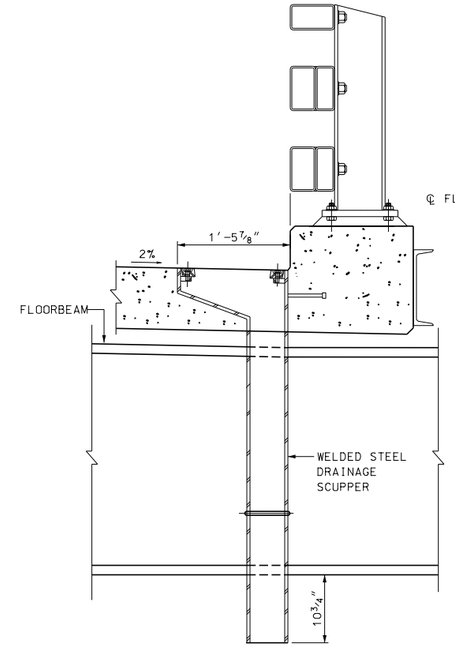

SECTION A-A

1″ = 1′-0″

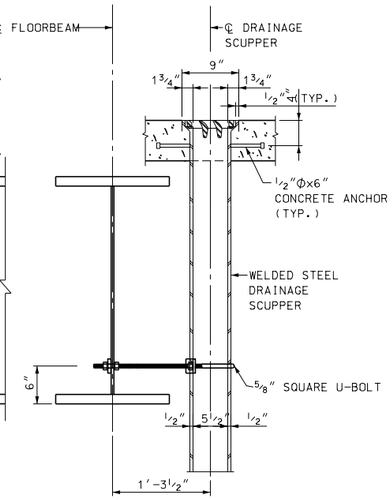

SECTION B-B

1″ = 1′-0″

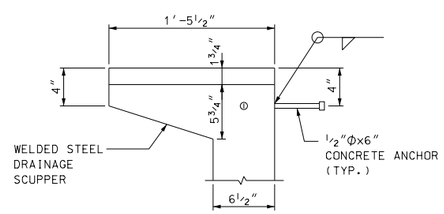

SCUPPER ELEVATION

1 1/2″ = 1′-0″

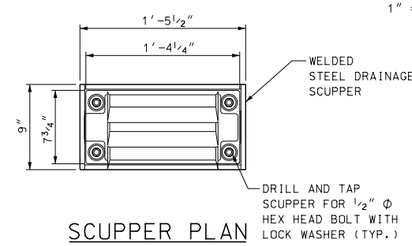

SCUPPER PLAN

1 1/2″ = 1′-0″

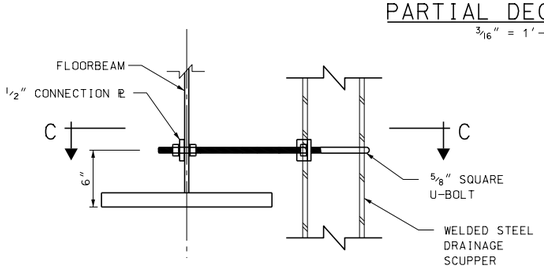

DETAIL 2

1 1/2″ = 1′-0″

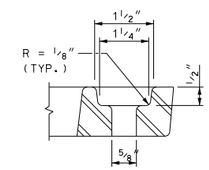

BOLT HOLE DETAIL

6″ = 1′-0″

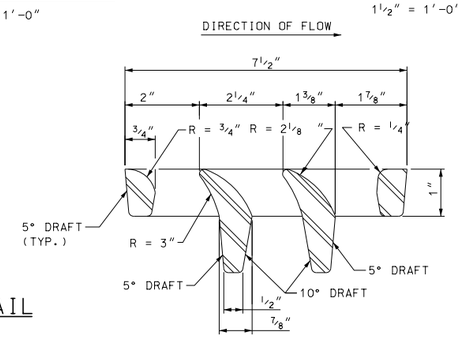

VANE GRATE DETAIL

6″ = 1′-0″

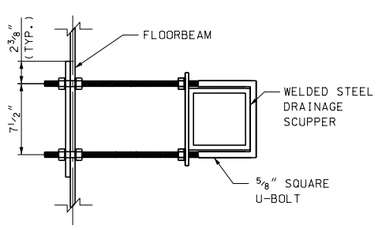

SECTION C-C

1 1/2″ = 1′-0″

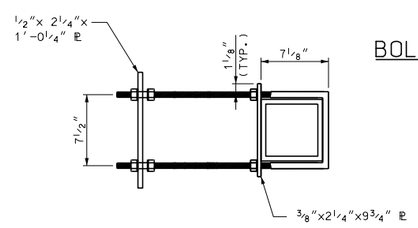

SCUPPER PIPE CLAMP DETAIL

1 1/2″ = 1′-0″

NOTES:

1. STRUCTURAL STEEL FOR DRAINAGE SCUPPER SHALL CONFORM TO ASTM A 709 GRADE 50.
2. GRATE SHALL BE CAST GRAY IRON CONFORMING TO THE REQUIREMENTS OF AASHTO M 105, CLASS 35B.
3. ALL STEEL FOR DRAINAGE SCUPPER AND CAST IRON GRATE SHALL BE GALVANIZED IN ACCORDANCE WITH ASTM A 123.
4. 1/2″ DIA. BOLTS AND 5/8″ DIA. U-BOLTS SHALL CONFORM TO THE REQUIREMENTS OF ASTM A 307 AND SHALL BE GALVANIZED IN ACCORDANCE WITH ASTM A 153.
5. DRAINAGE SCUPPER SHALL BE CONSTRUCTED AS A STRUCTURAL STEEL WELDMENT. FILLET OR FULL PENETRATION WELDS SHALL BE USED FOR THE WELDMENTS. DETAILS SHALL BE SUBMITTED TO THE ENGINEER FOR APPROVAL.
6. SCUPPER CLAMP AND FITTINGS SHALL BE HOT-DIP GALVANIZED IN ACCORDANCE WITH ASTM A 153.
7. FOR SCUPPER LOCATIONS ON SOUTH AND NORTH FIXED SPANS, SEE DECK PLANS ON BRIDGE SHEETS B22 TO B24.
8. SCUPPERS SHALL BE LOCATED BETWEEN BRIDGE RAIL POSTS TO AVOID INTERFERENCE WITH ADDITIONAL DECK REINFORCEMENT.
9. ALL WORK ASSOCIATED WITH BRIDGE DRAINAGE SCUPPERS SHALL BE INCLUDED UNDER ITEM XXX.

80% Submission
January 10, 2012

ARCHER WESTERN CONTRACTORS

HNTB
HNTB Corporation
The HNTB Companies
Engineers Architects Planners

STATE OF NEW HAMPSHIRE
DEPARTMENT OF TRANSPORTATION * BUREAU OF BRIDGE DESIGN

TOWN PORTSMOUTH, NH. - KITTERY, ME. BRIDGE NO. 247 \ 084 STATE PROJECT 13678F

LOCATION U.S. ROUTE 1 OVER PISCATAQUA RIVER

FIXED SPAN - DRAINAGE SCUPPER DETAILS

REVISIONS AFTER PROPOSAL		BY	DATE		BY	DATE
	DESIGNED	JN	09/11	CHECKED	TPZ	09/11
	DRAWN	SPL	09/11	CHECKED	GT	09/11
	QUANTITIES	XX	XX/XX	CHECKED	XX	XX/XX
	ISSUE DATE		FEDERAL PROJECT NO.		SHEET NO.	
	REV. DATE					

BRIDGE SHEET B27 OF
FILE NUMBER 107-1-1
TOTAL SHEETS

SUBDIRECTORY	.DGN LOCATOR	SHEET SCALE
	$FILENAME$	AS NOTED

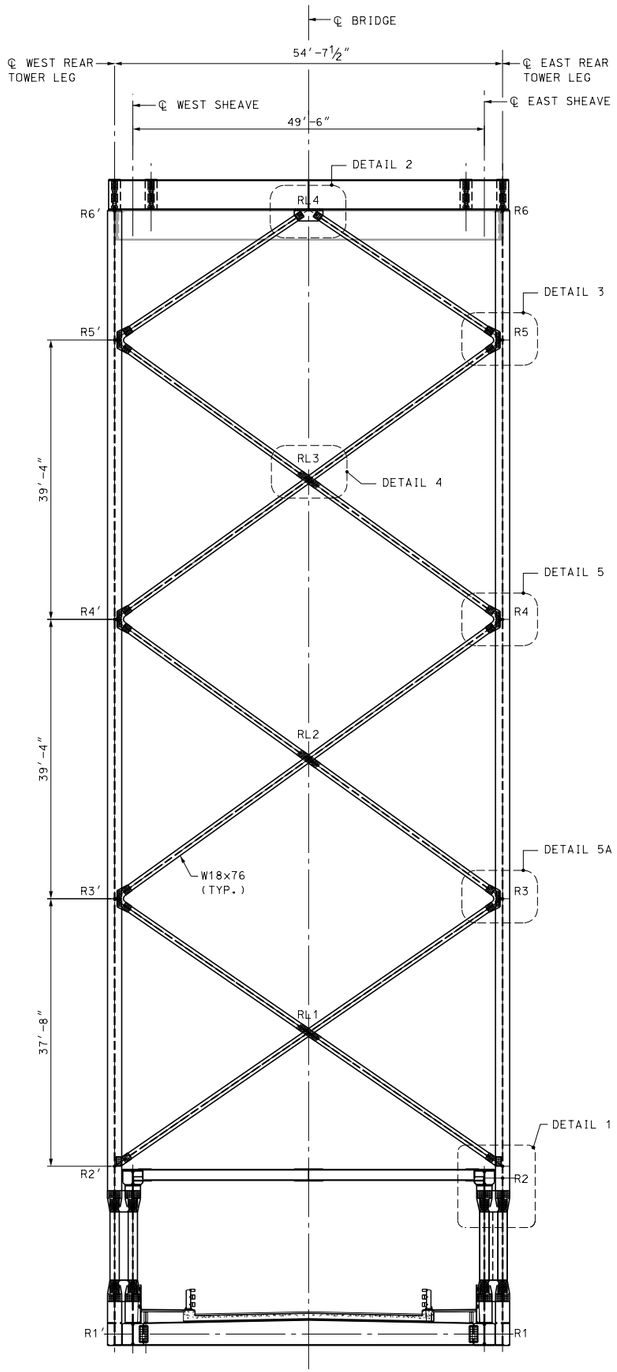

VIEW A-A

3/32" = 1'-0"

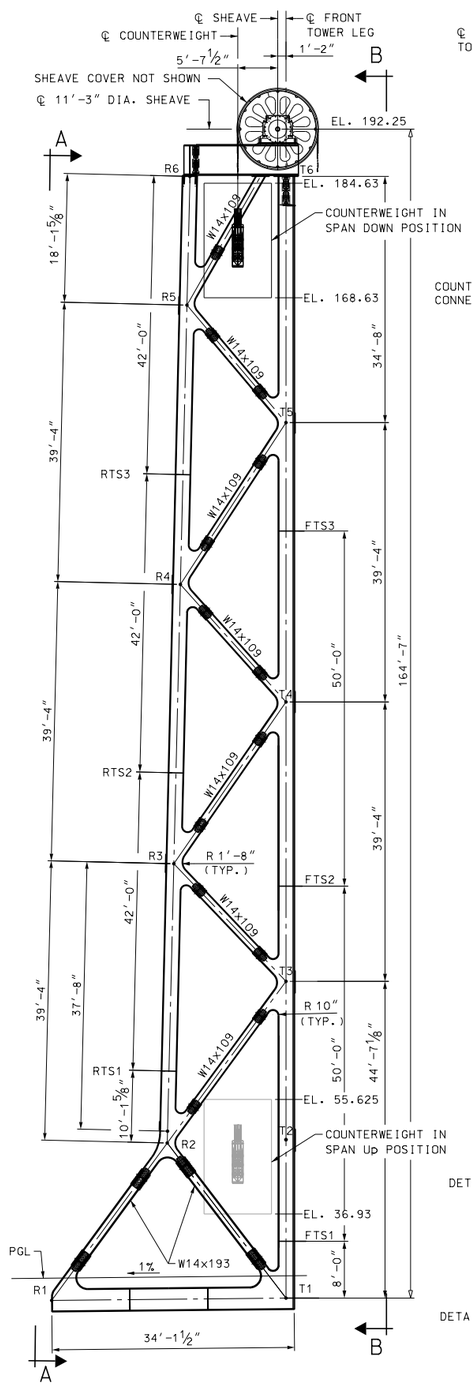

SOUTH TOWER EAST ELEVATION

3/32" = 1'-0"

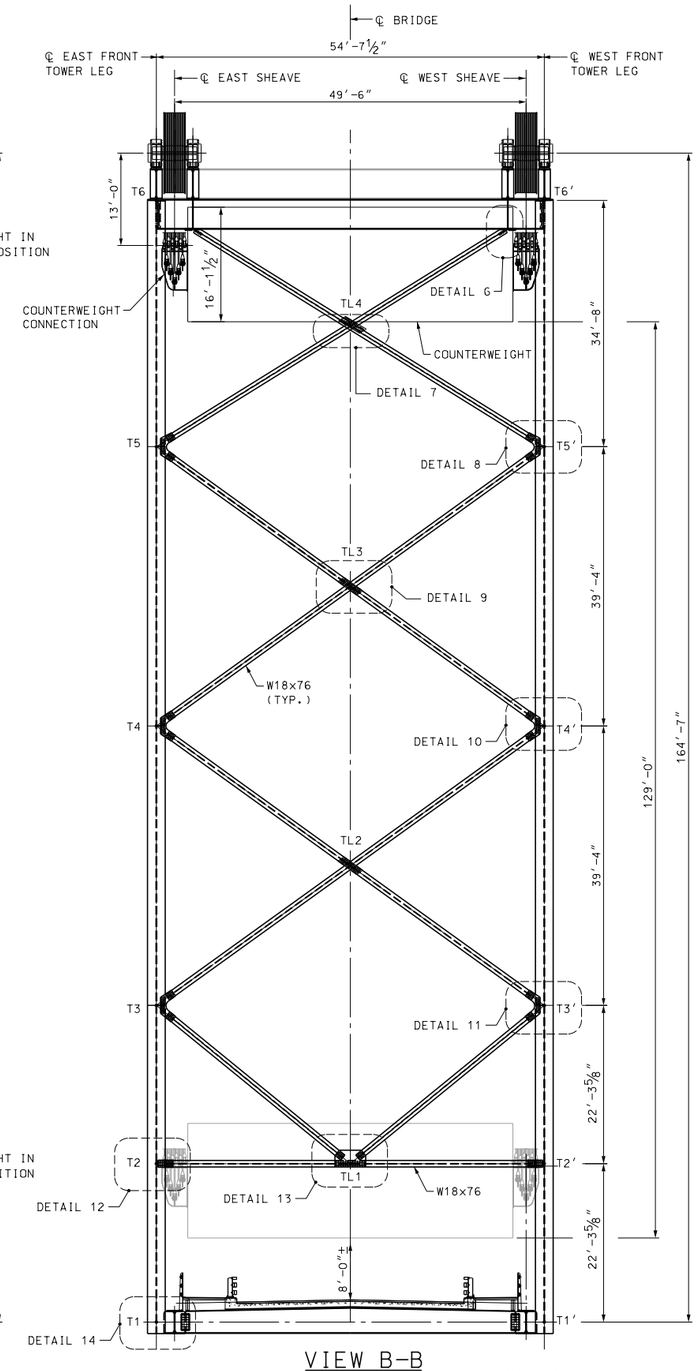

VIEW B-B

3/32" = 1'-0"

NOTES:

1. ALL TOWER STRUCTURAL STEEL SHALL BE AASHTO M270 GRADE 50 UNLESS NOTED OTHERWISE.
2. FOR DETAILS 1 THRU 3, SEE BRIDGE SHEET B31.
3. FOR DETAILS 4 THRU 6, SEE BRIDGE SHEET B32.
4. FOR DETAILS 7 THRU 10, SEE BRIDGE SHEET B33.
5. FOR DETAILS 11 THRU 13, SEE BRIDGE SHEET B33A.
6. FOR DETAIL 14, SEE BRIDGE SHEET B33B.
7. FOR TYPICAL SHEAVE SUPPORT DETAILS, SEE BRIDGE SHEET B34.
8. FOR COUNTERWEIGHT DETAILS, SEE BRIDGE SHEET B36.
9. FOR SECTION E-E, SEE BRIDGE SHEET B31.
10. FOR TOWER LEG SPLICE DETAILS, SEE BRIDGE SHEET B30D.
11. FOR EXTERIOR LADDER AND OTHER INFORMATION, SEE BRIDGE SHEET BXX.

LEGEND:

T(n)	INDICATE TOWER FRONT LEG PANEL POINT
R(n)	INDICATE TOWER REAR LEG PANEL POINT
TL(n)	INDICATE TOWER FRONT LEG BRACING PANEL POINT
RL(n)	INDICATE TOWER REAR LEG BRACING PANEL POINT
FTS(n)	INDICATE TOWER FRONT LEG SPLICE POINT
RTS(n)	INDICATE TOWER REAR LEG SPLICE POINT

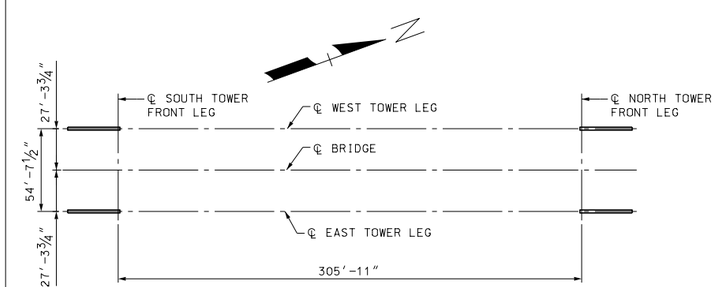

KEY PLAN

N.T.S.

80% Submission

January 10, 2012

ARCHER WESTERN CONTRACTORS

HNTB

HNTB Corporation
The HNTB Companies
Engineers Architects Planners

SUBDIRECTORY	.DGN LOCATOR	SHEET SCALE
	$FILENAME$	3/32" =1'-0"

STATE OF NEW HAMPSHIRE

DEPARTMENT OF TRANSPORTATION * BUREAU OF BRIDGE DESIGN

TOWN PORTSMOUTH, NH. - KITTERY, ME. BRIDGE NO. 247 \ 084 STATE PROJECT 13678F

LOCATION U.S. ROUTE 1 OVER PISCATAQUA RIVER

TYPICAL TOWER ELEVATIONS

REVISIONS AFTER PROPOSAL		BY	DATE		BY	DATE
	DESIGNED	JN	09/11	CHECKED	TPZ	09/11
	DRAWN	SPL	09/11	CHECKED	GT	09/11
	QUANTITIES	XX	XX/XX	CHECKED	XX	XX/XX
	ISSUE DATE		FEDERAL PROJECT NO.		SHEET NO.	
	REV. DATE					

BRIDGE SHEET B30 OF

FILE NUMBER 107-1-1

TOTAL SHEETS

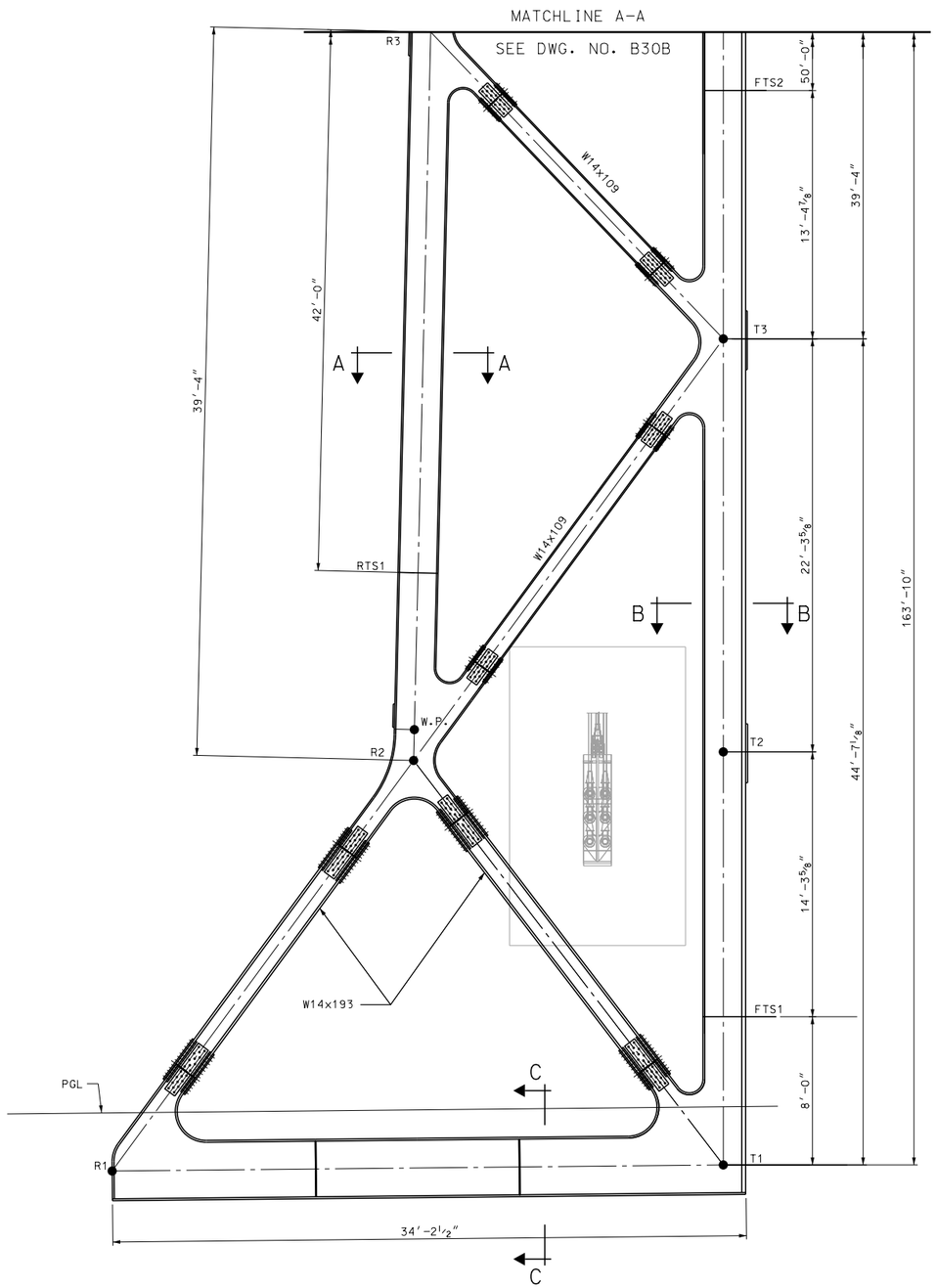

MODIFIED TRUSS TOWER ELEVATION: T1 TO T2

1/4" = 1'-0"

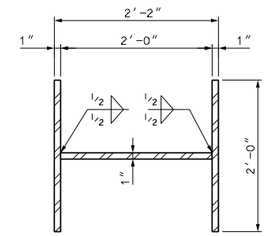

SECTION A-A

1"= 1'-0"

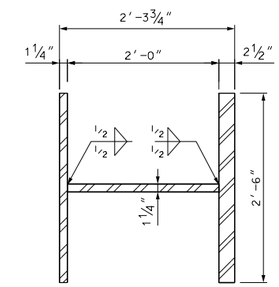

SECTION B-B

1"= 1'-0"

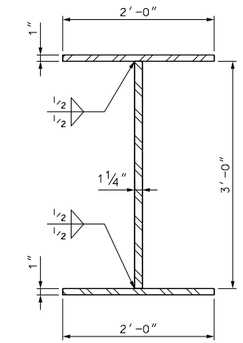

SECTION C-C

1"= 1'-0"

LEGEND:

T(n)	INDICATES TOWER FRONT LEG PANEL POINT
R(n)	INDICATES TOWER REAR LEG PANEL POINT
TL(n)	INDICATES TOWER FRONT LEG BRACING PANEL POINT
RL(n)	INDICATES TOWER REAR LEG BRACING PANEL POINT
FTS(n)	INDICATES TOWER FRONT LEG SPLICE LOCATION
RTS(n)	INDICATES TOWER REAR LEG SPLICE LOCATION
W.P.	INDICATES WORKING POINT FOR REAR LEG BRACING

NOTES:

1. ALL STRUCTURAL STEEL SHALL BE AASHTO M270 GRADE 50 UNLESS NOTED OTHERWISE.
2. FOR TYPICAL TOWR GEOMETRY, SEE BRIDGE SHEET B30.
3. FOR TOWER LEG SPLICE DETAILS, SEE BRIDGE SHEET B30D.
4. FOR TYPICAL DIAGONAL SPLICE DETAILS, SEE BRIDGE SHEET B19.

80% Submission
January 10, 2012

ARCHER WESTERN CONTRACTORS

HNTB
HNTB Corporation
The HNTB Companies
Engineers Architects Planners

SUBDIRECTORY	.DGN LOCATOR	SHEET SCALE
	$FILENAME$	AS NOTED

STATE OF NEW HAMPSHIRE
DEPARTMENT OF TRANSPORTATION * BUREAU OF BRIDGE DESIGN

TOWN PORTSMOUTH, NH. - KITTERY, ME. BRIDGE NO. 247 \ 084 STATE PROJECT 13678F

LOCATION U.S. ROUTE 1 OVER PISCATAQUA RIVER

TOWER TRUSS ELEVATION 1 OF 3

REVISIONS AFTER PROPOSAL		BY	DATE		BY	DATE
	DESIGNED	CSE	09/11	CHECKED	TPZ	09/11
	DRAWN	SPL	09/11	CHECKED	GT	09/11
	QUANTITIES	XX	XX/XX	CHECKED	XX	XX/XX
	ISSUE DATE					
	REV. DATE					

FEDERAL PROJECT NO.	SHEET NO.	TOTAL SHEETS

BRIDGE SHEET B30A OF

FILE NUMBER 107-1-1

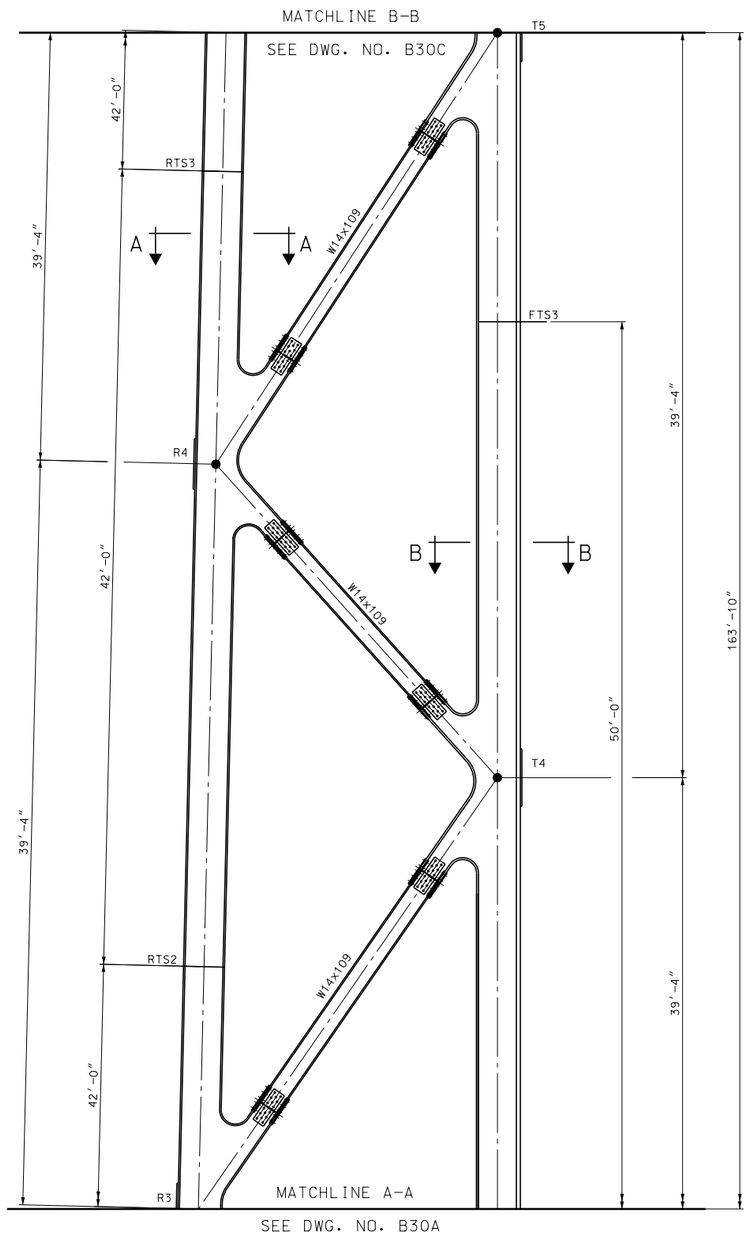

MODIFIED TRUSS TOWER ELEVATION: T2 TO T3

1/4" = 1'- 0"

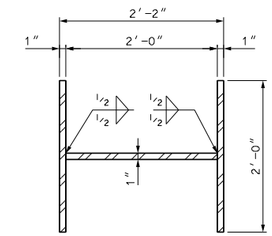

SECTION A-A

1"= 1'-0"

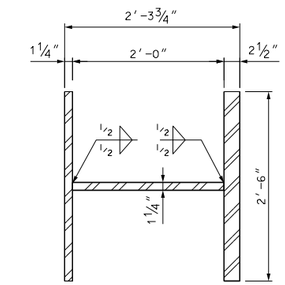

SECTION B-B

1"= 1'-0"

LEGEND:

T(n)	INDICATES TOWER FRONT LEG PANEL POINT
R(n)	INDICATES TOWER REAR LEG PANEL POINT
TL(n)	INDICATES TOWER FRONT LEG BRACING PANEL POINT
RL(n)	INDICATES TOWER REAR LEG BRACING PANEL POINT
FTS(n)	INDICATES TOWER FRONT LEG SPLICE LOCATION
RTS(n)	INDICATES TOWER REAR LEG SPLICE LOCATION

NOTES:

1. ALL STRUCTURAL STEEL SHALL BE AASHTO M270 GRADE 50 UNLESS NOTED OTHERWISE.
2. FOR TYPICAL TOWR GEOMETRY, SEE BRIDGE SHEET B30.
3. FOR TOWER LEG SPLICE DETAILS, SEE BRIDGE SHEET B30D.
4. FOR TYPICAL DIAGONAL SPLICE DETAILS, SEE BRIDGE SHEET B19.

80% Submission
January 10, 2012

ARCHER WESTERN CONTRACTORS

HNTB
HNTB Corporation
The HNTB Companies
Engineers Architects Planners

SUBDIRECTORY	.DGN LOCATOR	SHEET SCALE
	$FILENAME$	AS NOTED

STATE OF NEW HAMPSHIRE
DEPARTMENT OF TRANSPORTATION * BUREAU OF BRIDGE DESIGN

TOWN PORTSMOUTH, NH. - KITTERY, ME. BRIDGE NO. 247 \ 084 STATE PROJECT 13678F

LOCATION U.S. ROUTE 1 OVER PISCATAQUA RIVER

TOWER TRUSS ELEVATION 2 OF 3

BRIDGE SHEET: B30B$DF

REVISIONS AFTER PROPOSAL		BY	DATE		BY	DATE
	DESIGNED	CSE	09/11	CHECKED	TPZ	09/11
	DRAWN	SPL	09/11	CHECKED	GT	09/11
	QUANTITIES	XX	XX/XX	CHECKED	XX	XX/XX
	ISSUE DATE					
	REV. DATE					

FEDERAL PROJECT NO. | SHEET NO. | TOTAL SHEETS

FILE NUMBER: 107-1-1

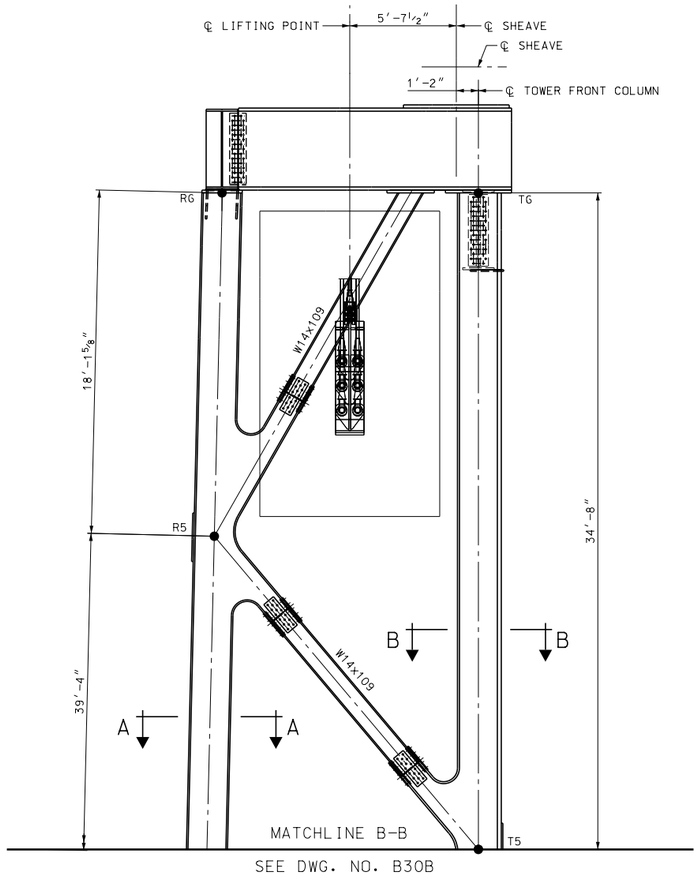

MODIFIED TRUSS TOWER ELEVATION: T3 TO T5

¼" = 1'-0"

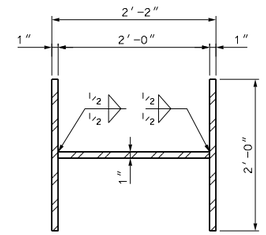

SECTION A-A

1" = 1'-0"

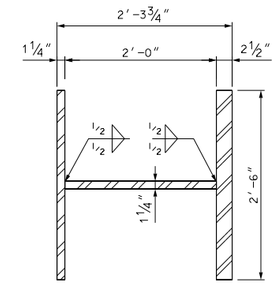

SECTION B-B

1" = 1'-0"

LEGEND:

T(n)	INDICATES TOWER FRONT LEG PANEL POINT
R(n)	INDICATES TOWER REAR LEG PANEL POINT
TL(n)	INDICATES TOWER FRONT LEG BRACING PANEL POINT
RL(n)	INDICATES TOWER REAR LEG BRACING PANEL POINT
FTS(n)	INDICATES TOWER FRONT LEG SPLICE LOCATION
RTS(n)	INDICATES TOWER REAR LEG SPLICE LOCATION

NOTES:

1. ALL STRUCTURAL STEEL SHALL BE AASHTO M270 GRADE 50 UNLESS NOTED OTHERWISE.
2. FOR TYPICAL TOWR GEOMETRY, SEE BRIDGE SHEET B30.
3. FOR TOWER LEG SPLICE DETAILS, SEE BRIDGE SHEET B30D.
4. FOR TYPICAL DIAGONAL SPLICE DETAILS, SEE BRIDGE SHEET B19.

80% Submission
January 10, 2012

ARCHER WESTERN CONTRACTORS

HNTB
HNTB Corporation
The HNTB Companies
Engineers Architects Planners

SUBDIRECTORY	.DGN LOCATOR	SHEET SCALE
	$FILENAME$	AS NOTED

STATE OF NEW HAMPSHIRE
DEPARTMENT OF TRANSPORTATION * BUREAU OF BRIDGE DESIGN

TOWN PORTSMOUTH, NH. - KITTERY, ME. BRIDGE NO. 247 \ 084 STATE PROJECT 13678F

LOCATION U.S. ROUTE 1 OVER PISCATAQUA RIVER

TOWER TRUSS ELEVATION 3 OF 3

BRIDGE SHEET B30C(3F)

REVISIONS AFTER PROPOSAL	BY	DATE		BY	DATE
DESIGNED	CSE	09/11	CHECKED	TPZ	09/11
DRAWN	SPL	09/11	CHECKED	GT	09/11
QUANTITIES	XX	XX/XX	CHECKED	XX	XX/XX

FILE NUMBER 107-1-1

ISSUE DATE
REV. DATE
FEDERAL PROJECT NO.
SHEET NO.
TOTAL SHEETS

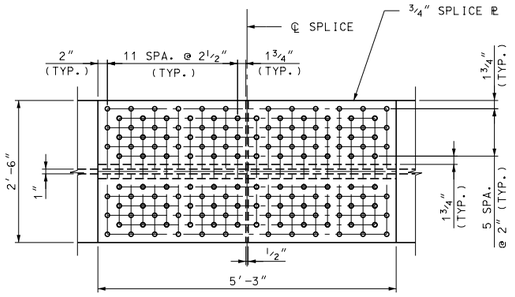

VIEW A-A

3/4"= 1'-0"

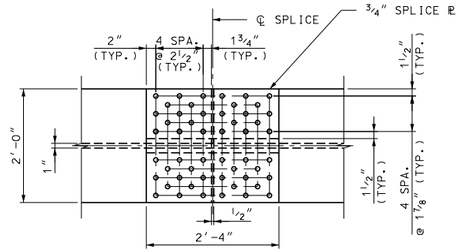

VIEW D-D

3/4"= 1'-0"

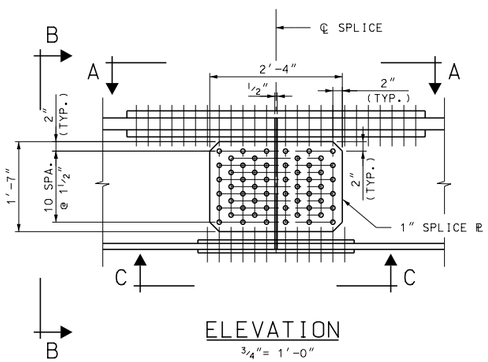

ELEVATION

3/4"= 1'-0"

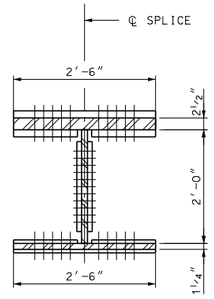

SECTION B-B

3/4"= 1'-0"

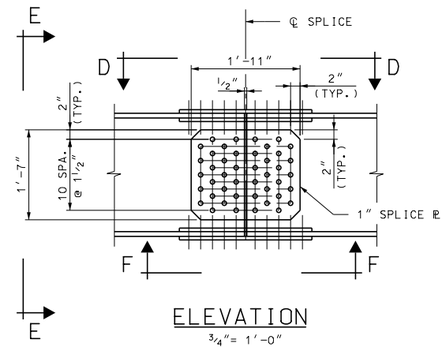

ELEVATION

3/4"= 1'-0"

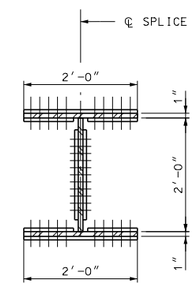

SECTION E-E

3/4"= 1'-0"

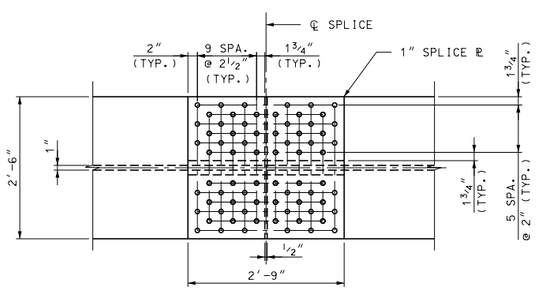

VIEW C-C

3/4"= 1'-0"

TOWER FRONT LEG SPLICE

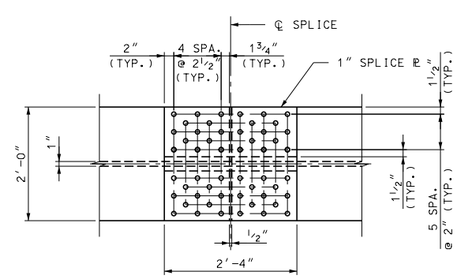

VIEW F-F

3/4"= 1'-0"

TOWER REAR LEG SPLICE

NOTES:

1. ALL STRUCTURAL STEEL SHALL BE AASHTO M270 GRADE 50 UNLESS NOTED OTHERWISE.
2. FOR LOCATIONS OF TOWER LEG SPLICES, SEE BRIDGE SHEET B30.
3. ALL BOLTS SHALL BE 7/8" DIA. HIGH STRENGTH ASTM A325 AND SHALL BE GALVANIZED PER THE REQUIREMENT OF ASTM A153. NUTS AND WASHERS SHALL BE A563 AND F43G RESPECTIVELY, AND SHALL BE GALVANIZED PER THE REQUIREMENT OF ASTM A153. ALL BOLTS, NUTS, AND WASHERS SHALL CONFORM TO SECTION 550 OF THE NHDOT STANDARD SPECIFICATIONS FOR ROAD AND BRIDGE CONSTRUCTION.
4. ALL SPLICE PLATES SHALL BE SAME GRADE STEEL AS THE TRUSS CHORD.
5. FLANGE AND WEB SPLICE PLATES SHALL BE FURNISHED WITH THERMAL CUT EDGES AS PER SECTION 550 OF THE NHDOT STANDARD SPECIFICATION FOR ROAD AND BRIDGE CONSTRUCTION.

80% Submission
January 10, 2012

ARCHER WESTERN CONTRACTORS

HNTB
HNTB Corporation
The HNTB Companies
Engineers Architects Planners

SUBDIRECTORY	.DGN LOCATOR	SHEET SCALE
	$FILENAME$	AS NOTED

STATE OF NEW HAMPSHIRE
DEPARTMENT OF TRANSPORTATION * BUREAU OF BRIDGE DESIGN

TOWN PORTSMOUTH, NH. - KITTERY, ME. BRIDGE NO. 247 \ 084 STATE PROJECT 13678F

LOCATION U.S. ROUTE 1 OVER PISCATAQUA RIVER

TOWER LEG SPLICE DETAILS

BRIDGE SHEET B30D3F

REVISIONS AFTER PROPOSAL	BY	DATE		BY	DATE
DESIGNED	TPZ	09/11	CHECKED	CSE	09/11
DRAWN	JN	09/11	CHECKED	GT	09/11
QUANTITIES	XX	XX/XX	CHECKED	XX	XX/XX
ISSUE DATE			FEDERAL PROJECT NO.	SHEET NO.	
REV. DATE					

FILE NUMBER 107-1-1

TOTAL SHEETS

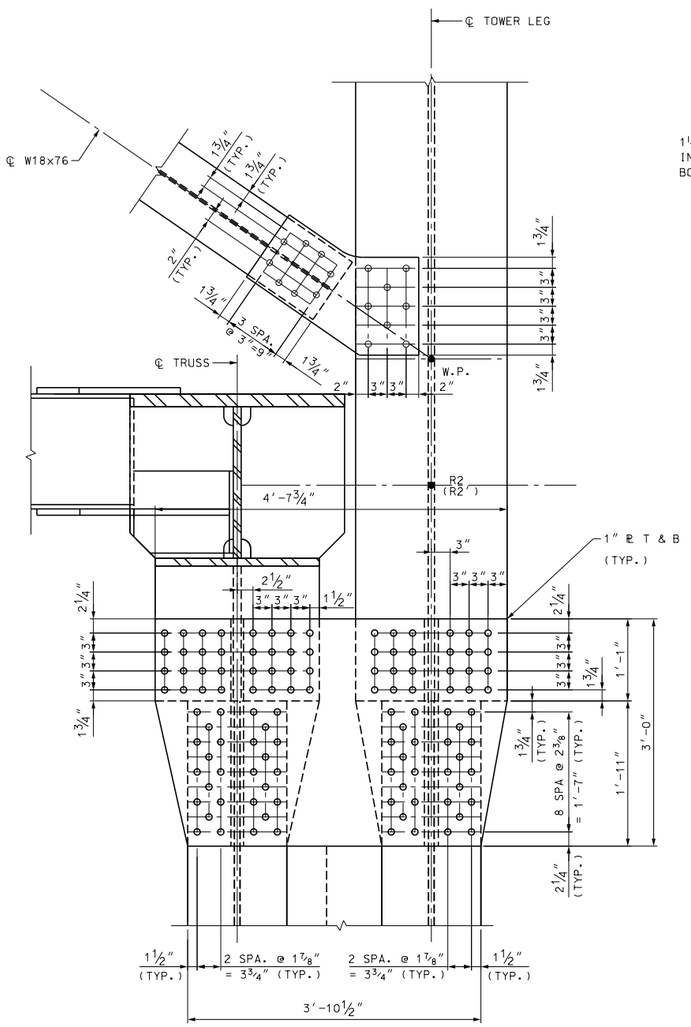

DETAIL 1

1"= 1'-0"

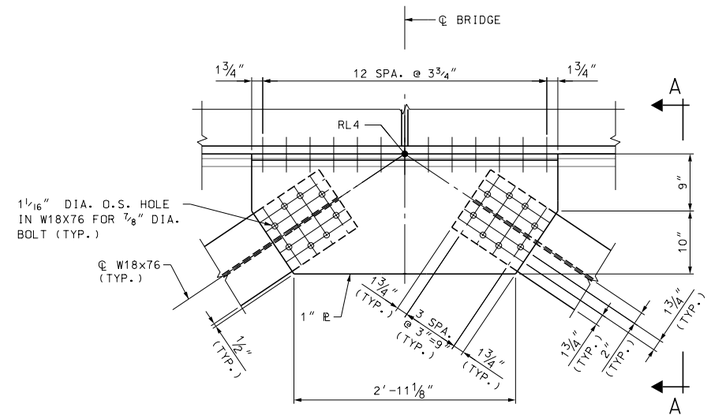

DETAIL 2

1"= 1'-0"

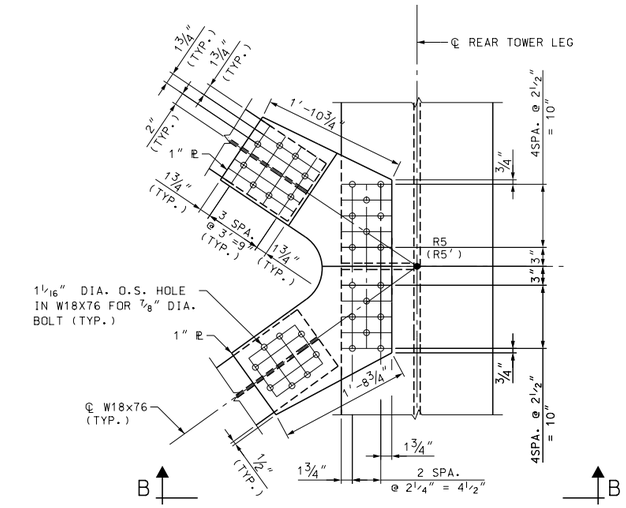

DETAIL 3

1"= 1'-0"

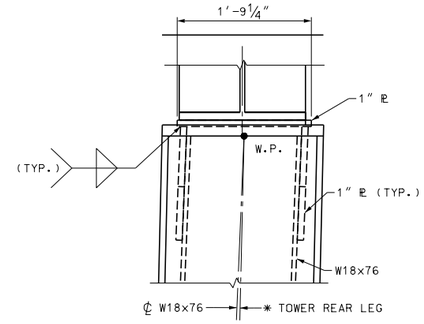

SECTION A-A

1"= 1'-0"

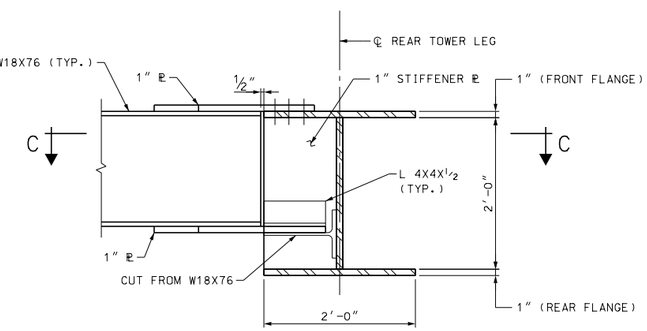

SECTION B-B

1"= 1'-0"

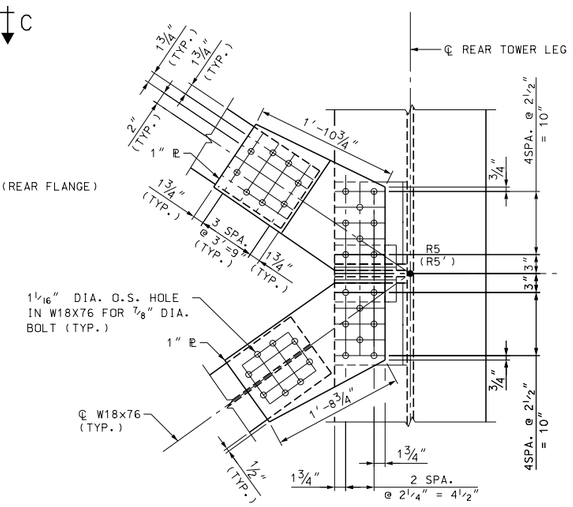

SECTION C-C

1"= 1'-0"

NOTES:

1. ALL TOWER STRUCTURAL STEEL SHALL BE AASHTO M270 GRADE 50 UNLESS OTHERWISE NOTED.
2. ALL BOLTS SHALL BE ⅞" DIA. HIGH STRENGTH ASTM A325 AND SHALL BE GALVANIZED PER THE REQUIREMENTS OF ASTM A153. NUTS AND WASHERS SHALL BE A563 AND F436 RESPECTIVELY, AND SHALL BE GALVANIZED PER REQUIREMENTS OF ASTM A153. ALL HOLES FOR ⅞" DIA. BOLTS SHALL BE 15/16" DIA. UNLESS NOTED OTHERWISE.
3. FOR LOCATION OF DETAILS 1 THRU 3, SEE BRIDGE SHEET B30.

LEGEND:

T(n)	INDICATE TOWER FRONT LEG PANEL POINT
R(n)	INDICATE TOWER REAR LEG PANEL POINT
TL(n)	INDICATE TOWER FRONT LEG BRACING PANEL POINT
RL(n)	INDICATE TOWER REAR LEG BRACING PANEL POINT

80% Submission
January 10, 2012

ARCHER WESTERN CONTRACTORS

HNTB
HNTB Corporation
The HNTB Companies
Engineers Architects Planners

SUBDIRECTORY	.DGN LOCATOR	SHEET SCALE
	SFILE NS MOD	

STATE OF NEW HAMPSHIRE
DEPARTMENT OF TRANSPORTATION * BUREAU OF BRIDGE DESIGN

TOWN PORTSMOUTH, NH. - KITTERY, ME. BRIDGE NO. 247 \ 084 STATE PROJECT 13678F

LOCATION U.S. ROUTE 1 OVER PISCATAQUA RIVER

TOWER - CONNECTION DETAILS 1 OF 5

REVISIONS AFTER PROPOSAL		BY	DATE		BY	DATE
	DESIGNED	CSE	09/11	CHECKED	TPZ	09/11
	DRAWN	SPL	09/11	CHECKED	GT	09/11
	QUANTITIES	XX	XX/XX	CHECKED	XX	XX/XX
	ISSUE DATE		FEDERAL PROJECT NO.		SHEET NO.	
	REV. DATE					

BRIDGE SHEET B31 OF
FILE NUMBER 107-1-1
TOTAL SHEETS

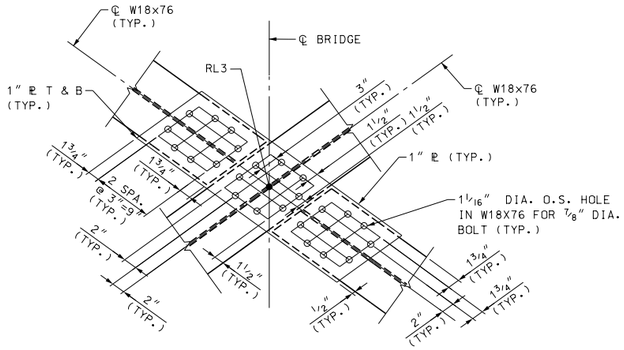

DETAIL 4
1"= 1'-0"

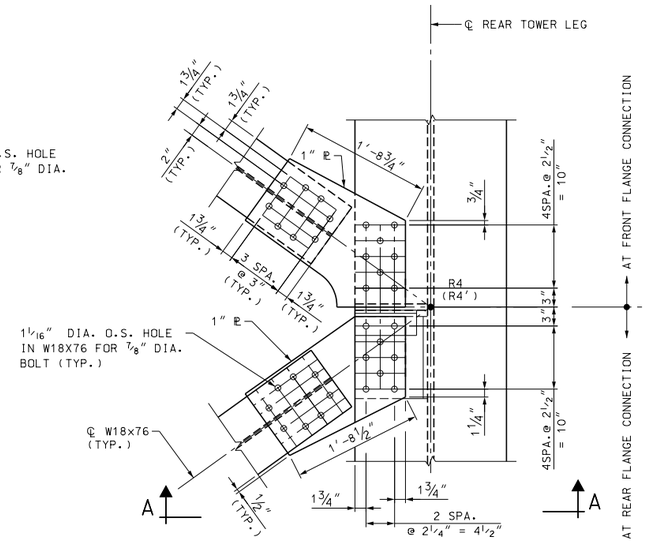

DETAIL 5
1"= 1'-0"

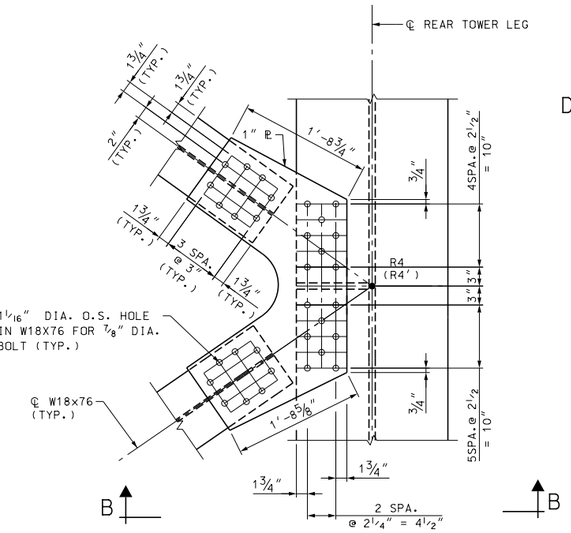

DETAIL 5A
1"= 1'-0"

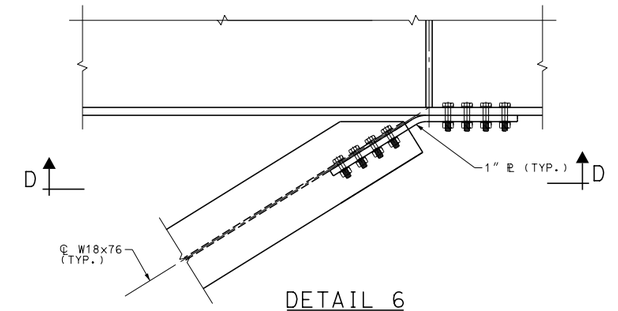

DETAIL 6
1"= 1'-0"

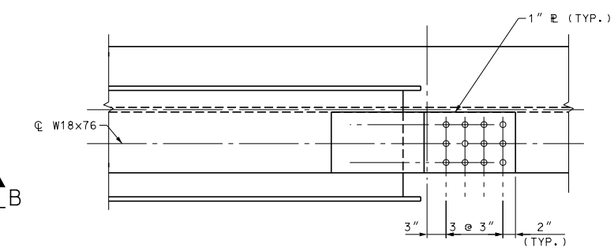

SECTION D-D
1"= 1'-0"

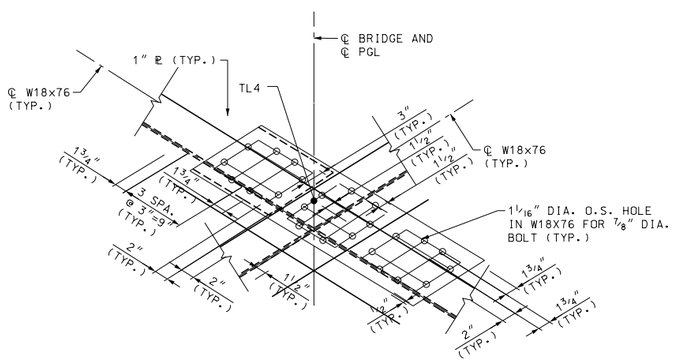

DETAIL 7
1"= 1'-0"

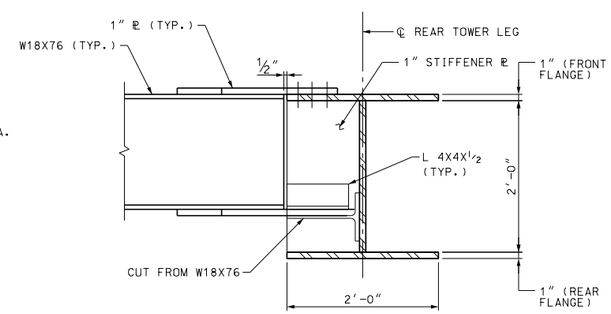

SECTION A-A
1"= 1'-0"

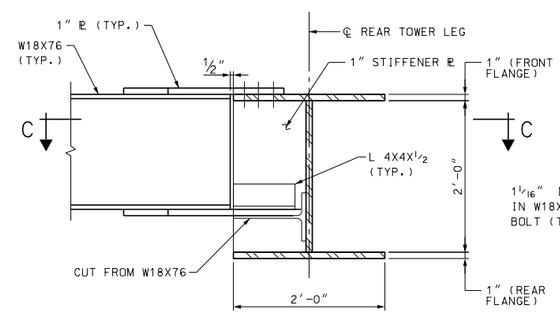

SECTION B-B
1"= 1'-0"

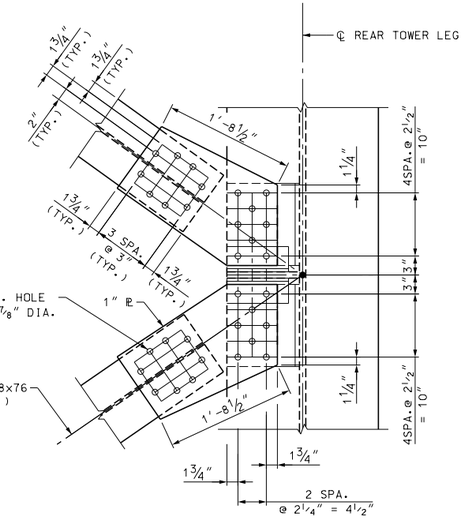

SECTION C-C
1"= 1'-0"

NOTES:

1. ALL TOWER STRUCTURAL STEEL SHALL BE AASHTO M270 GRADE 50 UNLESS OTHERWISE NOTED.
2. ALL BOLTS SHALL BE 7/8" DIA. HIGH STRENGTH ASTM A325 AND SHALL BE GALVANIZED PER THE REQUIREMENTS OF ASTM A153. NUTS AND WASHERS SHALL BE A563 AND F436 RESPECTIVELY, AND SHALL BE GALVANIZED PER REQUIREMENTS OF ASTM A153. ALL HOLES FOR 7/8" DIA. BOLTS SHALL BE 15/16" DIA. UNLESS NOTED OTHERWISE.
3. FOR LOCATION OF DETAILS 4 THRU 7, SEE BRIDGE SHEET B30.

LEGEND:

T(n)	INDICATE TOWER FRONT LEG PANEL POINT
R(n)	INDICATE TOWER REAR LEG PANEL POINT
TL(n)	INDICATE TOWER FRONT LEG BRACING PANEL POINT
RL(n)	INDICATE TOWER REAR LEG BRACING PANEL POINT

80% Submission
January 10, 2012

ARCHER WESTERN CONTRACTORS

HNTB
HNTB Corporation
The HNTB Companies
Engineers Architects Planners

SUBDIRECTORY	.DGN LOCATOR	SHEET SCALE
	$FILENAME$	AS NOTED

STATE OF NEW HAMPSHIRE
DEPARTMENT OF TRANSPORTATION * BUREAU OF BRIDGE DESIGN

TOWN PORTSMOUTH, NH. - KITTERY, ME. BRIDGE NO. 247 \ 084 STATE PROJECT 13678F

LOCATION U.S. ROUTE 1 OVER PISCATAQUA RIVER

TOWER - CONNECTION DETAILS 2 OF 5

BRIDGE SHEET B32 OF

FILE NUMBER 107-1-1

REVISIONS AFTER PROPOSAL		BY	DATE		BY	DATE
	DESIGNED	CSE	09/11	CHECKED	TPZ	09/11
	DRAWN	SPL	09/11	CHECKED	GT	09/11
	QUANTITIES	XX	XX/XX	CHECKED	XX	XX/XX

ISSUE DATE | FEDERAL PROJECT NO. | SHEET NO. | TOTAL SHEETS

REV. DATE

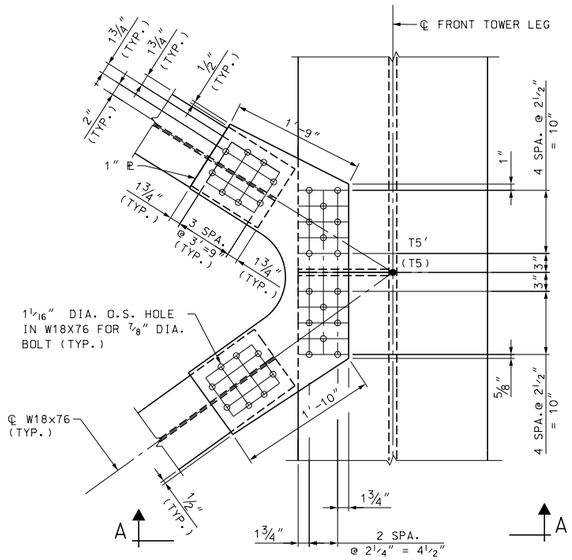

DETAIL 8
1"= 1'-0"

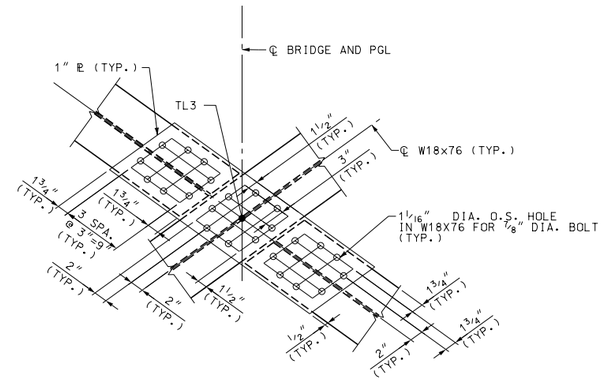

DETAIL 9
1"= 1'-0"

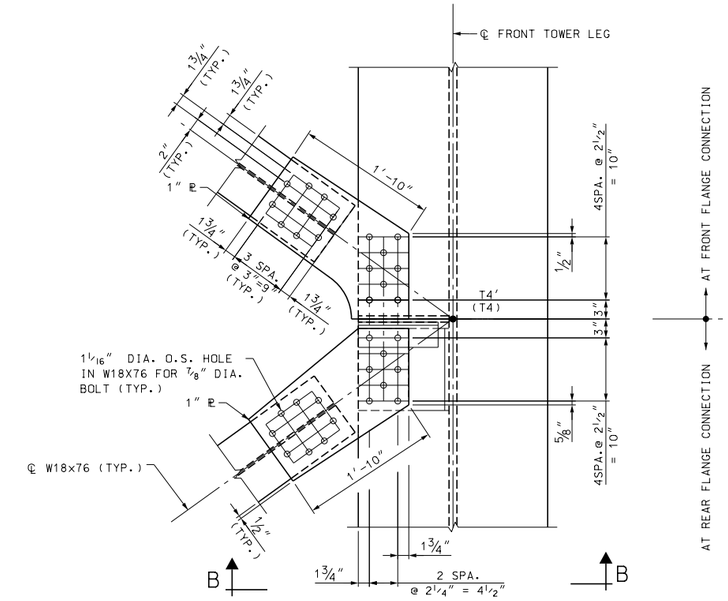

DETAIL 10
1"= 1'-0"

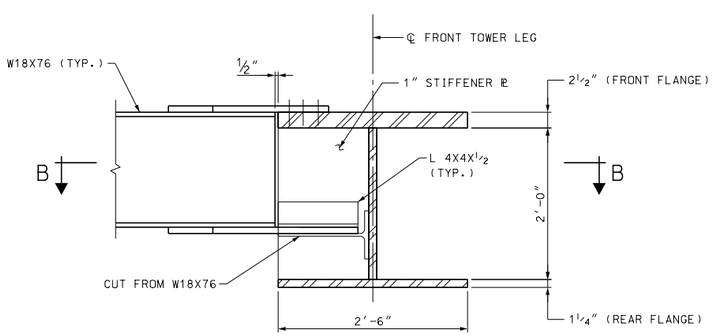

SECTION A-A
1"= 1'-0"

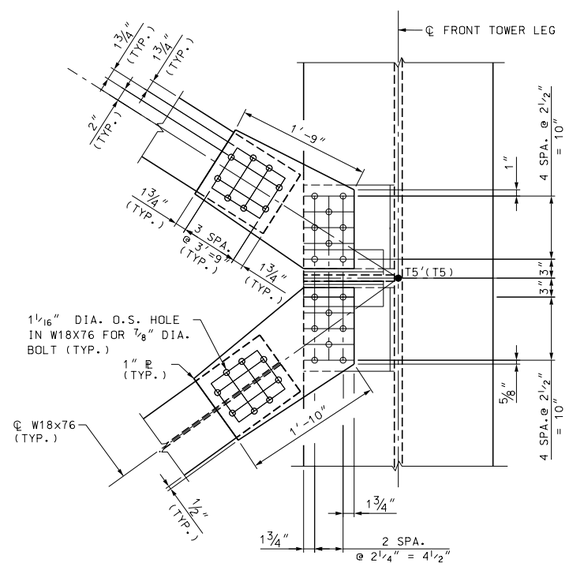

SECTION B-B
1"= 1'-0"

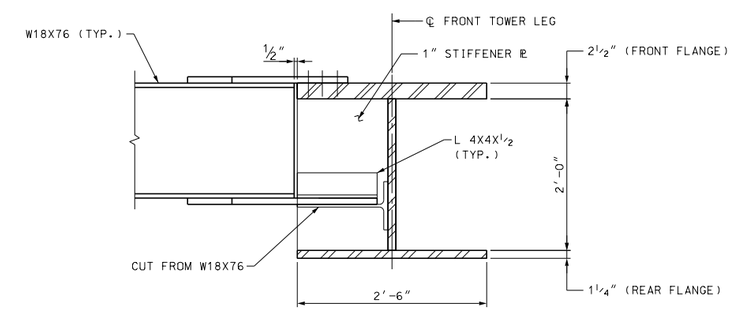

SECTION B-B
1"= 1'-0"

NOTES:

1. ALL TOWER STRUCTURAL STEEL SHALL BE AASHTO M270 GRADE 50 UNLESS OTHERWISE NOTED.
2. ALL BOLTS SHALL BE 7/8" DIA. HIGH STRENGTH ASTM A325 AND SHALL BE GALVANIZED PER THE REQUIREMENTS OF ASTM A153. NUTS AND WASHERS SHALL BE A563 AND F436 RESPECTIVELY, AND SHALL BE GALVANIZED PER REQUIREMENTS OF ASTM A153. ALL HOLES FOR 7/8" DIA. BOLTS SHALL BE 15/16" DIA. UNLESS NOTED OTHERWISE.
3. FOR LOCATION OF DETAILS 8 THRU 10, SEE BRIDGE SHEET B30.

LEGEND:

T(n)	INDICATE TOWER FRONT LEG PANEL POINT
R(n)	INDICATE TOWER REAR LEG PANEL POINT
TL(n)	INDICATE TOWER FRONT LEG BRACING PANEL POINT
RL(n)	INDICATE TOWER REAR LEG BRACING PANEL POINT

80% Submission
January 10, 2012

ARCHER WESTERN CONTRACTORS

HNTB
HNTB Corporation
The HNTB Companies
Engineers Architects Planners

SUBDIRECTORY	.DGN LOCATOR	SHEET SCALE
	$FILENAME$	1" = 1'-0"

STATE OF NEW HAMPSHIRE
DEPARTMENT OF TRANSPORTATION * BUREAU OF BRIDGE DESIGN

TOWN PORTSMOUTH, NH. - KITTERY, ME. BRIDGE NO. 247 \ 084 STATE PROJECT 13678F

LOCATION U.S. ROUTE 1 OVER PISCATAQUA RIVER

TOWER - CONNECTION DETAILS 3 OF 5

BRIDGE SHEET B33 OF

FILE NUMBER 107-1-1

REVISIONS AFTER PROPOSAL		BY	DATE		BY	DATE
	DESIGNED	CSE	09/11	CHECKED	TPZ	09/11
	DRAWN	SPL	09/11	CHECKED	GT	09/11
	QUANTITIES	XX	XX/XX	CHECKED	XX	XX/XX
	ISSUE DATE		FEDERAL PROJECT NO.		SHEET NO.	TOTAL SHEETS
	REV. DATE					

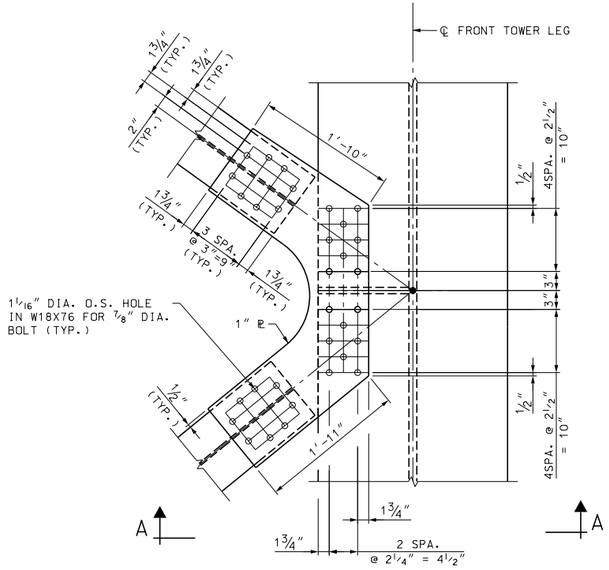

DETAIL 11

1"= 1'-0"

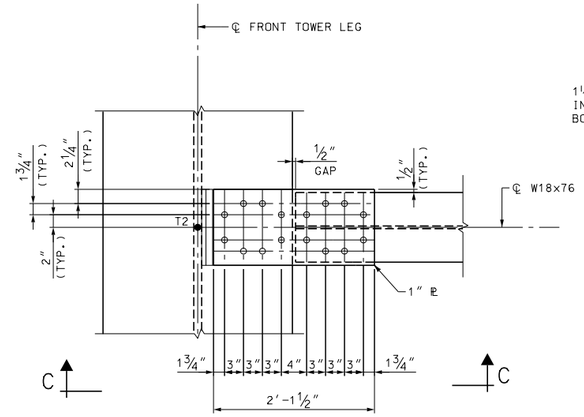

DETAIL 12

1"= 1'-0"

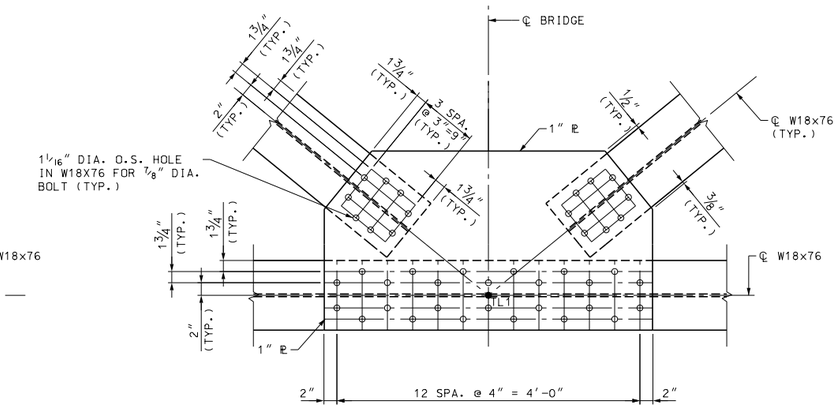

DETAIL 13

1"= 1'-0"

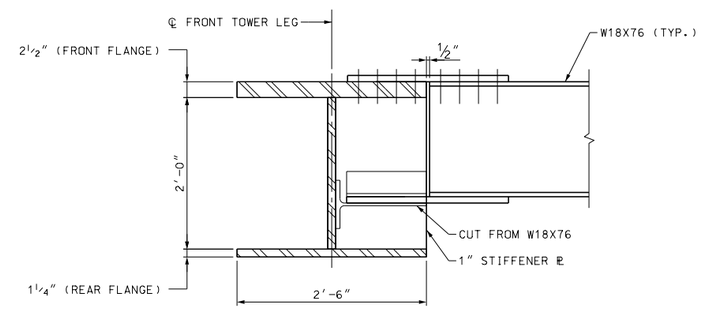

SECTION C-C

1"= 1'-0"

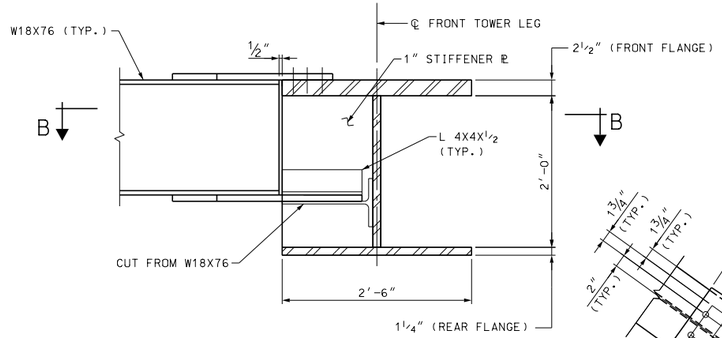

SECTION A-A

1"= 1'-0"

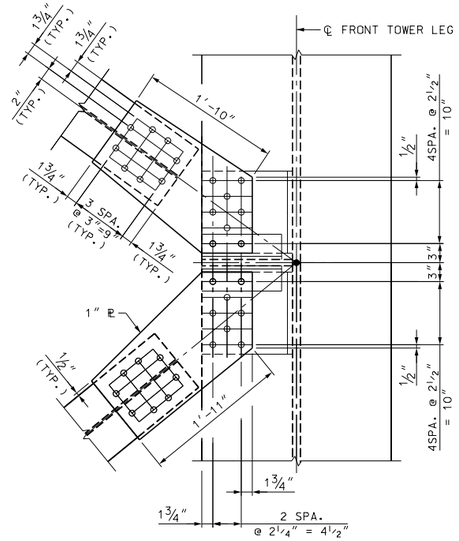

SECTION B-B

1"= 1'-0"

NOTES:

1. ALL TOWER STRUCTURAL STEEL SHALL BE AASHTO M270 GRADE 50 UNLESS OTHERWISE NOTED.
2. ALL BOLTS SHALL BE ⅞" DIA. HIGH STRENGTH ASTM A325 AND SHALL BE GALVANIZED PER THE REQUIREMENTS OF ASTM A153. NUTS AND WASHERS SHALL BE A563 AND F436 RESPECTIVELY, AND SHALL BE GALVANIZED PER REQUIREMENTS OF ASTM A153. ALL HOLES FOR ⅞" DIA. BOLTS SHALL BE 15/16" DIA. UNLESS NOTED OTHERWISE.
3. FOR LOCATION OF DETAILS 11 THRU 13, SEE BRIDGE SHEET B30.

LEGEND:

T(n)	INDICATE TOWER FRONT LEG PANEL POINT
R(n)	INDICATE TOWER REAR LEG PANEL POINT
TL(n)	INDICATE TOWER FRONT LEG BRACING PANEL POINT
RL(n)	INDICATE TOWER REAR LEG BRACING PANEL POINT

80% Submission
January 10, 2012

ARCHER WESTERN CONTRACTORS

HNTB
HNTB Corporation
The HNTB Companies
Engineers Architects Planners

STATE OF NEW HAMPSHIRE
DEPARTMENT OF TRANSPORTATION * BUREAU OF BRIDGE DESIGN

TOWN PORTSMOUTH, NH. - KITTERY, ME. BRIDGE NO. 247 \ 084 STATE PROJECT 13678F

LOCATION U.S. ROUTE 1 OVER PISCATAQUA RIVER

TOWER - CONNECTION DETAILS 4 OF 5

BRIDGE SHEET B33A OF

REVISIONS AFTER PROPOSAL	BY	DATE		BY	DATE
DESIGNED	CSE	09/11	CHECKED	TPZ	09/11
DRAWN	SPL	09/11	CHECKED	GT	09/11
QUANTITIES	XX	XX/XX	CHECKED	XX	XX/XX

ISSUE DATE
REV. DATE

FEDERAL PROJECT NO.
SHEET NO.
TOTAL SHEETS

FILE NUMBER 107-1-1

SUBDIRECTORY	.DGN LOCATOR	SHEET SCALE
	$FILENAME$	1" = 1'-0"

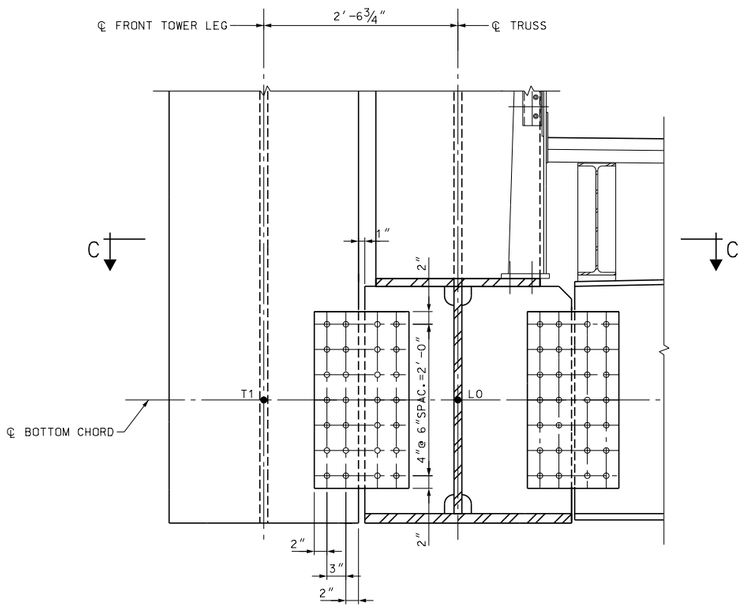

DETAIL 14

1"= 1'-0"

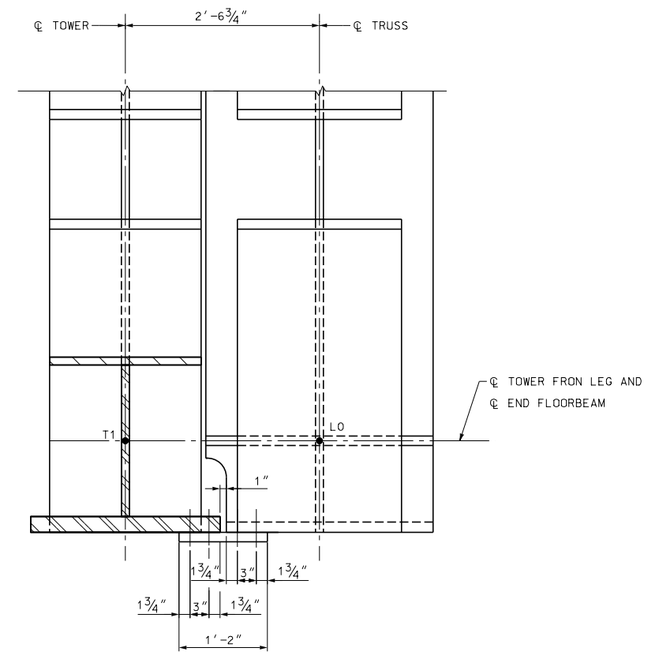

SECTION C-C

1"= 1'-0"

NOTES:

1. ALL TOWER STRUCTURAL STEEL SHALL BE AASHTO M270 GRADE 50 UNLESS OTHERWISE NOTED.

2. ALL BOLTS SHALL BE ⅜" DIA. HIGH STRENGTH ASTM A325 AND SHALL BE GALVANIZED PER THE REQUIREMENTS OF ASTM A153. NUTS AND WASHERS SHALL BE A563 AND F436 RESPECTIVELY, AND SHALL BE GALVANIZED PER REQUIREMENTS OF ASTM A153. ALL HOLES FOR ⅜" DIA. BOLTS SHALL BE ⅜" DIA. UNLESS NOTED OTHERWISE.

3. FOR LOCATION OF DETAIL 14, SEE BRIDGE SHEET B30.

LEGEND:

T(n)	INDICATE TOWER FRONT LEG PANEL POINT
R(n)	INDICATE TOWER REAR LEG PANEL POINT
TL(n)	INDICATE TOWER FRONT LEG BRACING PANEL POINT
RL(n)	INDICATE TOWER REAR LEG BRACING PANEL POINT

80% Submission
January 10, 2012

ARCHER WESTERN CONTRACTORS

HNTB
HNTB Corporation
The HNTB Companies
Engineers Architects Planners

SUBDIRECTORY	.DGN LOCATOR	SHEET SCALE
	$FILENAME$	1" = 1'-0"

STATE OF NEW HAMPSHIRE
DEPARTMENT OF TRANSPORTATION * BUREAU OF BRIDGE DESIGN

TOWN PORTSMOUTH, NH. - KITTERY, ME. BRIDGE NO. 247 \ 084 STATE PROJECT 13678F

LOCATION U.S. ROUTE 1 OVER PISCATAQUA RIVER

TOWER - CONNECTION DETAILS 5 OF 5

REVISIONS AFTER PROPOSAL		BY	DATE		BY	DATE
	DESIGNED	CSE	09/11	CHECKED	TPZ	09/11
	DRAWN	SPL	09/11	CHECKED	GT	09/11
	QUANTITIES	XX	XX/XX	CHECKED	XX	XX/XX
	ISSUE DATE		FEDERAL PROJECT NO.		SHEET NO.	
	REV. DATE					

BRIDGE SHEET B33B JF

FILE NUMBER 107-1-1

TOTAL SHEETS

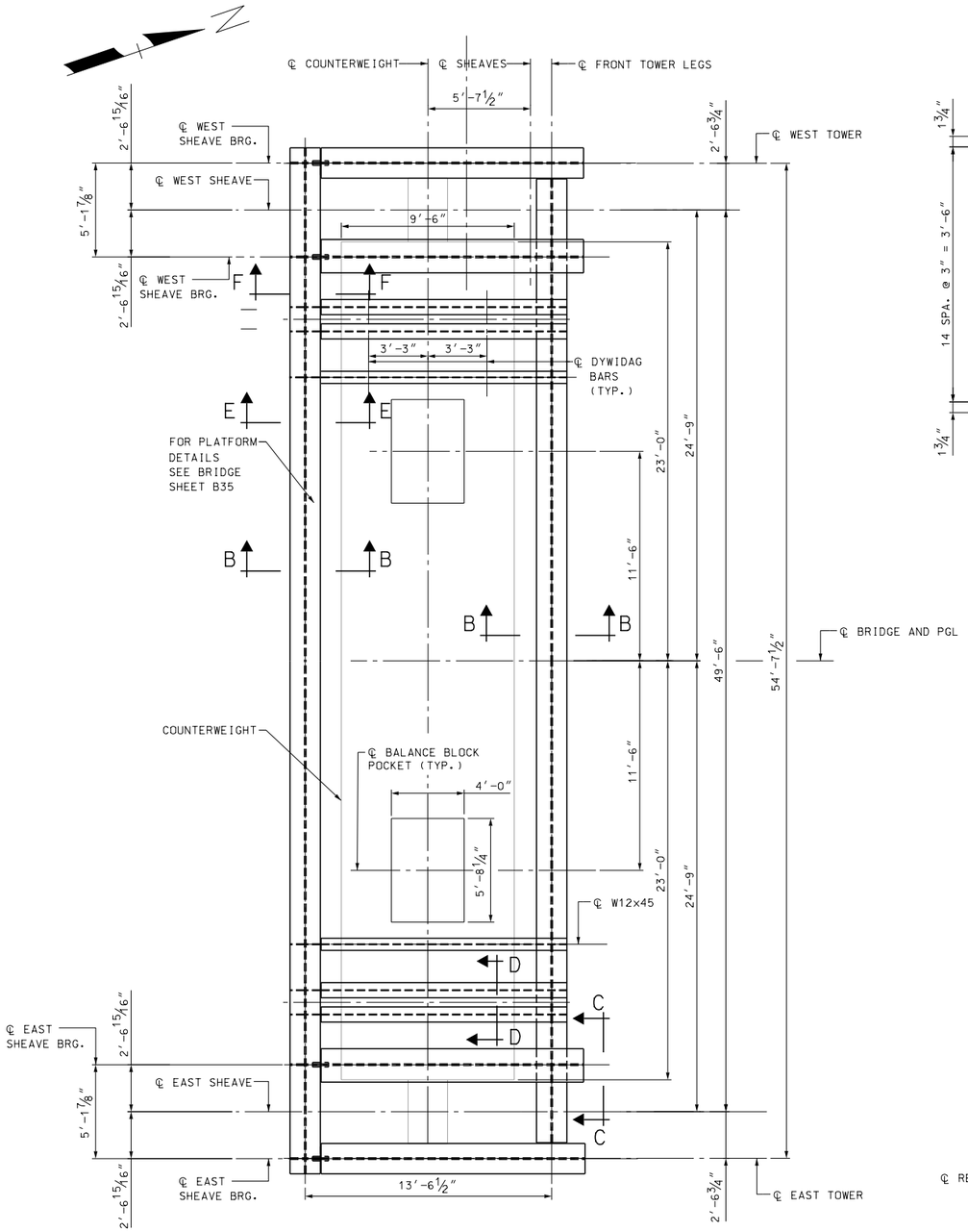

VIEW A-A
(NORTH OPP. HAND)
¼″= 1′-0″

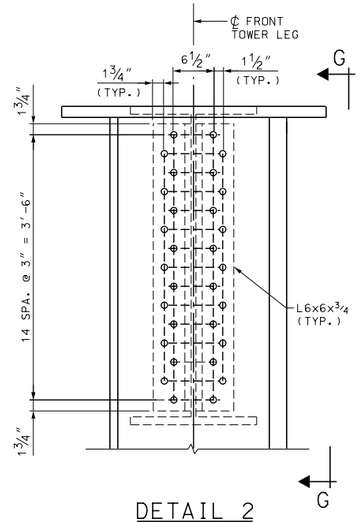

DETAIL 2
1″= 1′-0″

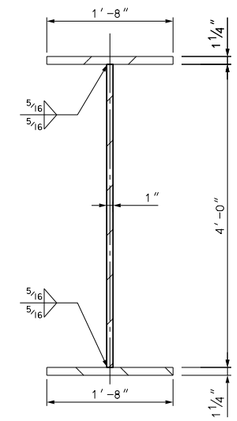

SECTION B-B
1″= 1′-0″

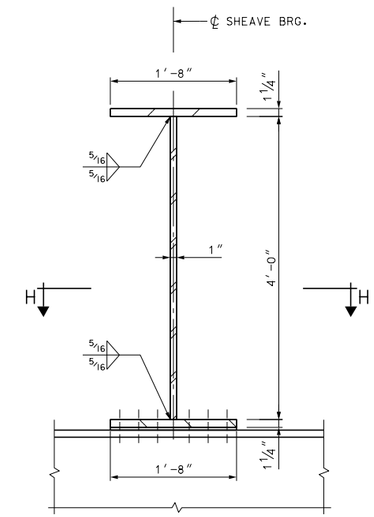

SECTION C-C
1″= 1′-0″

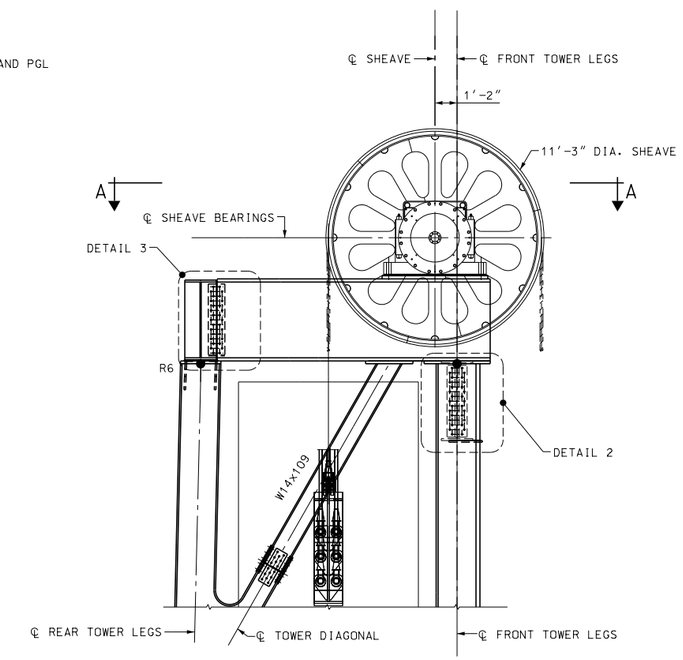

DETAIL 1
¼″= 1′-0″

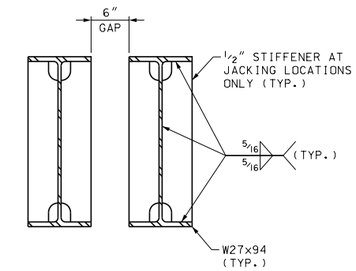

SECTION D-D
1″= 1′-0″

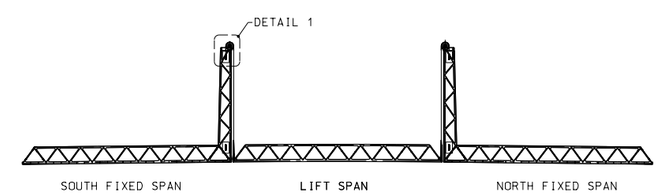

KEY ELEVATION
N.T.S.

NOTES:

1. ALL TOWER STRUCTURAL STEEL SHALL BE AASHTO M270 GRADE 50 UNLESS OTHERWISE NOTED.
2. FOR EXTERIOR LADDER AND OTHER INFORMATION, SEE BRIDGE SHEET BXX.
3. FOR TYPICAL TOWER ELEVATIONS, SEE BRIDGE SHEETS B30 AND B31 RESPECTIVELY.
4. FOR DETAIL 3 AND SECTIONS E-E, F-F, G-G, AND H-H, SEE BRIDGE SHEET B34A.

80% Submission
January 10, 2012

ARCHER WESTERN CONTRACTORS

HNTB
HNTB Corporation
The HNTB Companies
Engineers Architects Planners

STATE OF NEW HAMPSHIRE
DEPARTMENT OF TRANSPORTATION * BUREAU OF BRIDGE DESIGN

TOWN PORTSMOUTH, NH. - KITTERY, ME. BRIDGE NO. 247\084 STATE PROJECT 13678F

LOCATION U.S. ROUTE 1 OVER PISCATAQUA RIVER

TOWER - SHEAVE SUPPORT DETAILS 1 OF 2

BRIDGE SHEET B34 OF

FILE NUMBER 107-1-1

TOTAL SHEETS

REVISIONS AFTER PROPOSAL	BY	DATE		BY	DATE
	DESIGNED JN	09/11	CHECKED TPZ	09/11	
	DRAWN PRE	09/11	CHECKED GT	09/11	
	QUANTITIES XX	XX/XX	CHECKED XX	XX/XX	
	ISSUE DATE		FEDERAL PROJECT NO.	SHEET NO.	
	REV. DATE				

SUBDIRECTORY	.DGN LOCATOR	SHEET SCALE
	$FILENAME$	1/2" = 1'-0"

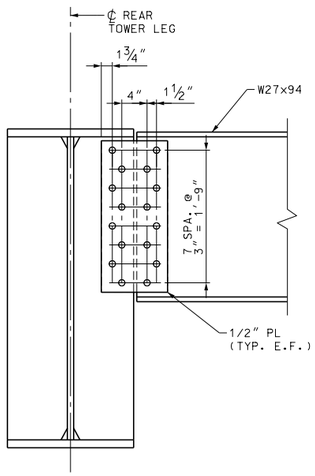

SECTION E-E

1"= 1'-0"

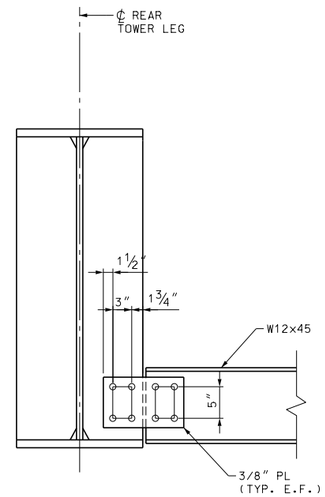

SECTION F-F

1"= 1'-0"

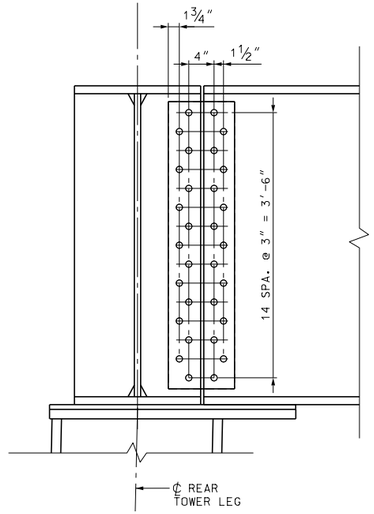

DETAIL 3

1"= 1'-0"

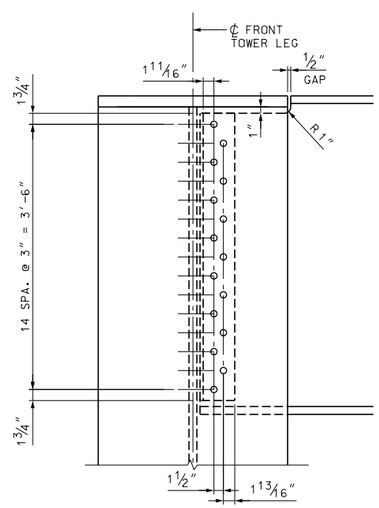

SECTION G-G

1"= 1'-0"

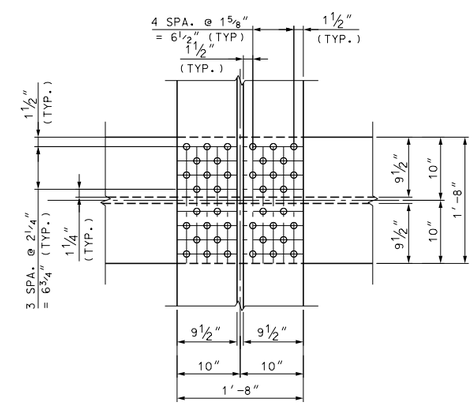

SECTION H-H

1"= 1'-0"

NOTES:

1. ALL TOWER STRUCTURAL STEEL SHALL BE AASHTO M270 GRADE 50 UNLESS OTHERWISE NOTED.

2. FOR LOCATIONS OF DETAIL 3 AND SECTIONS E-E, F-F, G-G, AND H-H, SEE BRIDGE SHEET B34.

80% Submission
January 10, 2012

ARCHER WESTERN CONTRACTORS

HNTB

HNTB Corporation
The HNTB Companies
Engineers Architects Planners

SUBDIRECTORY	.DGN LOCATOR	SHEET SCALE
	$FILENAME$	1/2" = 1'-0"

STATE OF NEW HAMPSHIRE
DEPARTMENT OF TRANSPORTATION * BUREAU OF BRIDGE DESIGN

TOWN PORTSMOUTH, NH. - KITTERY, ME. BRIDGE NO. 247 \ 084 STATE PROJECT 13678F

LOCATION U.S. ROUTE 1 OVER PISCATAQUA RIVER

TOWER - SHEAVE SUPPORT DETAILS 2 OF 2

BRIDGE SHEET B34A OF

FILE NUMBER 107-1-1

REVISIONS AFTER PROPOSAL		BY	DATE		BY	DATE
	DESIGNED	JN	09/11	CHECKED	TPZ	09/11
	DRAWN	PRE	09/11	CHECKED	GT	09/11
	QUANTITIES	XX	XX/XX	CHECKED	XX	XX/XX

ISSUE DATE | FEDERAL PROJECT NO. | SHEET NO. | TOTAL SHEETS

REV. DATE

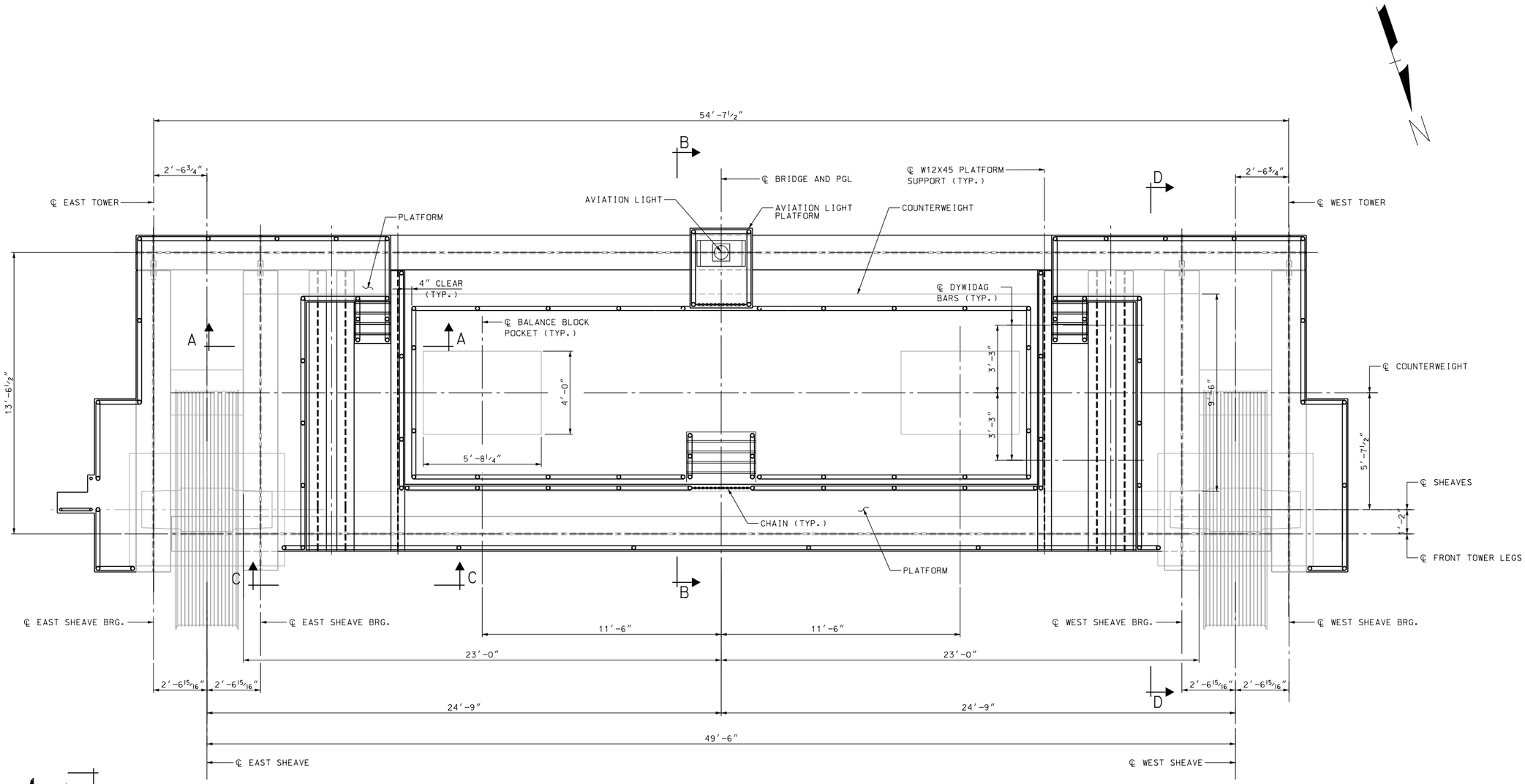

TOWER TOP PLAN VIEW

(NORTH DIAGONALLY SYM. - SEE NOTE 2)

3/8"= 1'-0"

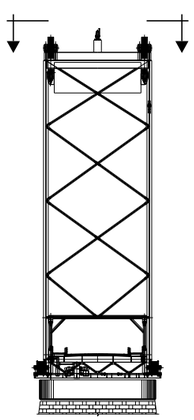

KEY ELEVATION

N.T.S.

NOTES:

1. FOR SECTIONS A-A, B-B AND C-C, SEE BRIDGE SHEET B35B.
2. THIS VIEW SHOWS THE TYPICAL CLOSED POSITION. FOR VIEW OF SHEAVE PLATFORM IN OPEN POSITION, SEE BRIDGE SHEET B35A.
3. FOR COUNTERWEIGHT DETAILS, SEE BRIDGE SHEET B3G THRU B39.

80% Submission
January 10, 2012

ARCHER WESTERN CONTRACTORS

HNTB
HNTB Corporation
The HNTB Companies
Engineers Architects Planners

SUBDIRECTORY	.DGN LOCATOR	SHEET SCALE
	$FILENAME$	1/2" = 1'-0"

STATE OF NEW HAMPSHIRE
DEPARTMENT OF TRANSPORTATION * BUREAU OF BRIDGE DESIGN

TOWN PORTSMOUTH, NH. - KITTERY, ME. BRIDGE NO. 247 \ 084 STATE PROJECT 13678F

LOCATION U.S. ROUTE 1 OVER PISCATAQUA RIVER

TOWER - SHEAVE PLATFORM DETAILS - 1 OF 4

REVISIONS AFTER PROPOSAL		BY	DATE		BY	DATE
	DESIGNED	JN	09/11	CHECKED	TPZ	09/11
	DRAWN	PRE	09/11	CHECKED	GT	09/11
	QUANTITIES	XX	XX/XX	CHECKED	XX	XX/XX
	ISSUE DATE		FEDERAL PROJECT NO.		SHEET NO.	
	REV. DATE					

BRIDGE SHEET B35 OF

FILE NUMBER 107-1-1

TOTAL SHEETS

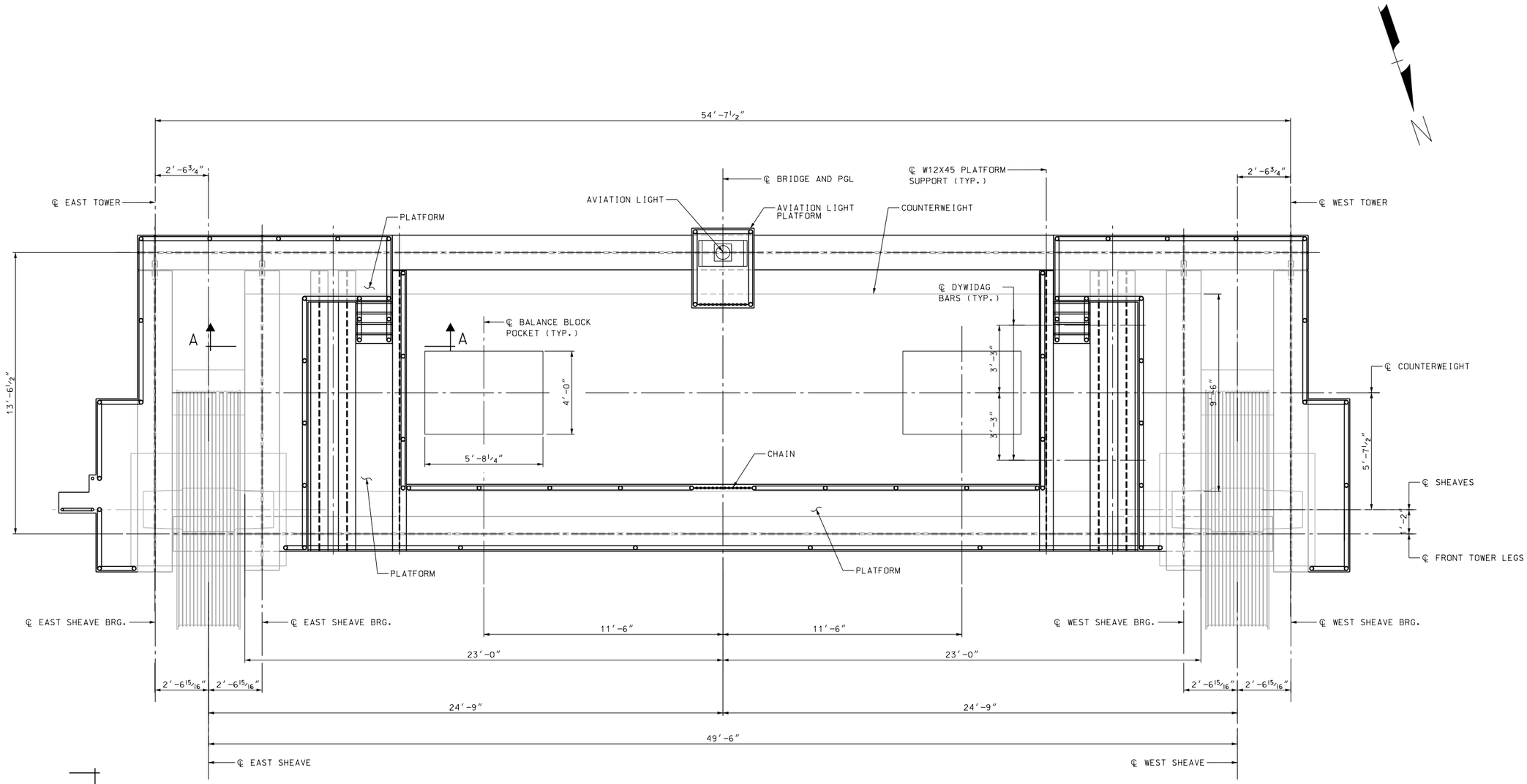

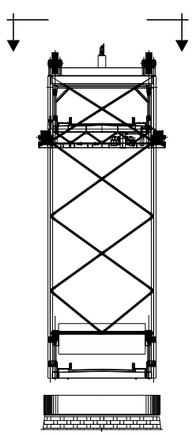

KEY ELEVATION
N.T.S.

TOWER TOP PLAN VIEW – BRIDGE OPEN

(NORTH DIAGONALLY SYM. – SEE NOTE 2)

3/8"= 1'-0"

NOTES:

1. FOR SECTION A-A, SEE BRIDGE SHEET B35B.
2. THIS VIEW SHOWS THE TYPICAL OPEN POSITION. FOR VIEW OF SHEAVE PLATFORM IN CLOSED POSITION, SEE BRIDGE SHEET B35.
3. FOR COUNTERWEIGHT DETAILS, SEE BRIDGE SHEETS B3G THRU B39.

80% Submission
January 10, 2012

ARCHER WESTERN CONTRACTORS

HNTB
HNTB Corporation
The HNTB Companies
Engineers Architects Planners

SUBDIRECTORY	.DGN LOCATOR	SHEET SCALE
	$FILENAME$	1/2" = 1'-0"

STATE OF NEW HAMPSHIRE
DEPARTMENT OF TRANSPORTATION * BUREAU OF BRIDGE DESIGN

TOWN PORTSMOUTH, NH. - KITTERY, ME. BRIDGE NO. 247 \ 084 STATE PROJECT 13678F

LOCATION U.S. ROUTE 1 OVER PISCATAQUA RIVER

TOWER - SHEAVE PLATFORM DETAILS - 2 OF 4

BRIDGE SHEET: B35A OF

FILE NUMBER: 107-1-1

REVISIONS AFTER PROPOSAL			BY	DATE		BY	DATE
		DESIGNED	JN	09/11	CHECKED	TPZ	09/11
		DRAWN	PRE	09/11	CHECKED	GT	09/11
		QUANTITIES	XX	XX/XX	CHECKED	XX	XX/XX
		ISSUE DATE			FEDERAL PROJECT NO.	SHEET NO.	TOTAL SHEETS
		REV. DATE					

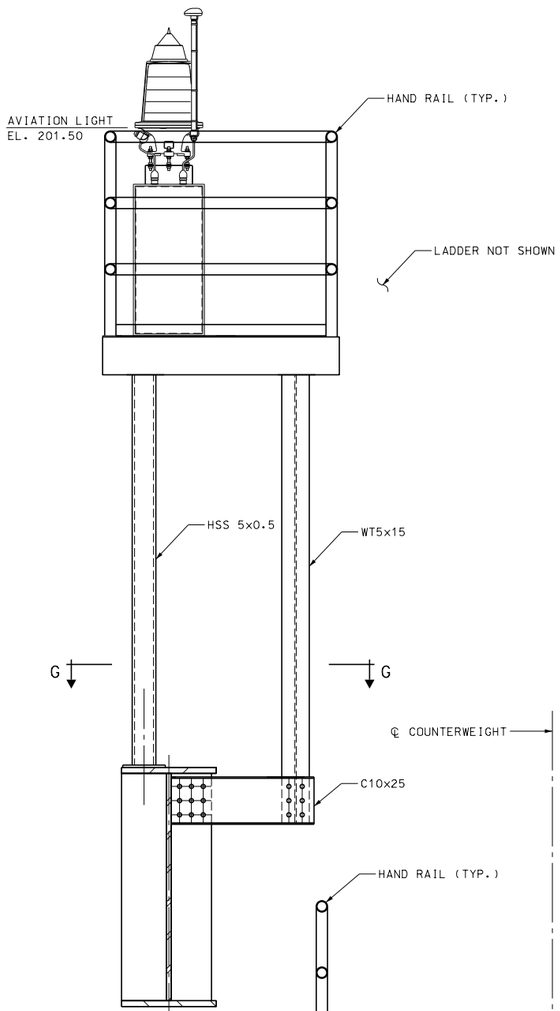

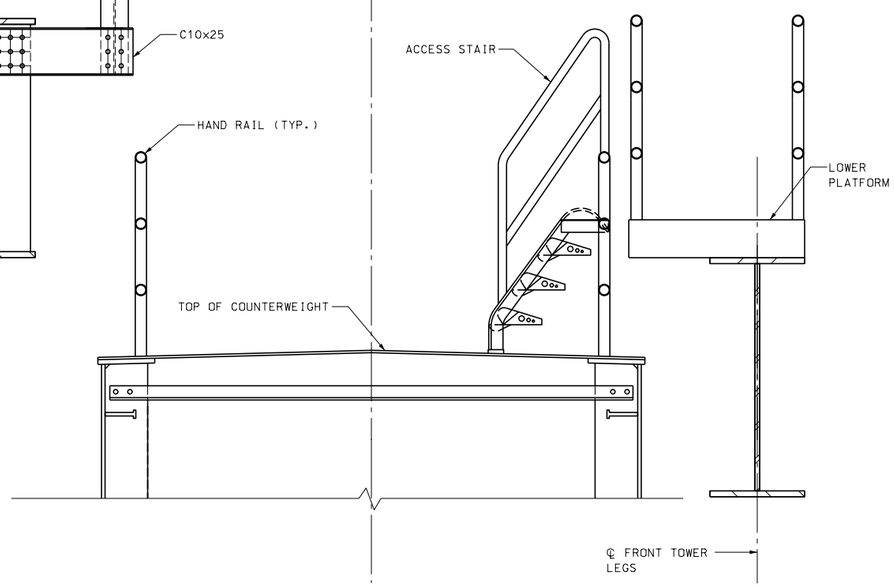

SECTION B-B

3/4"= 1'-0"

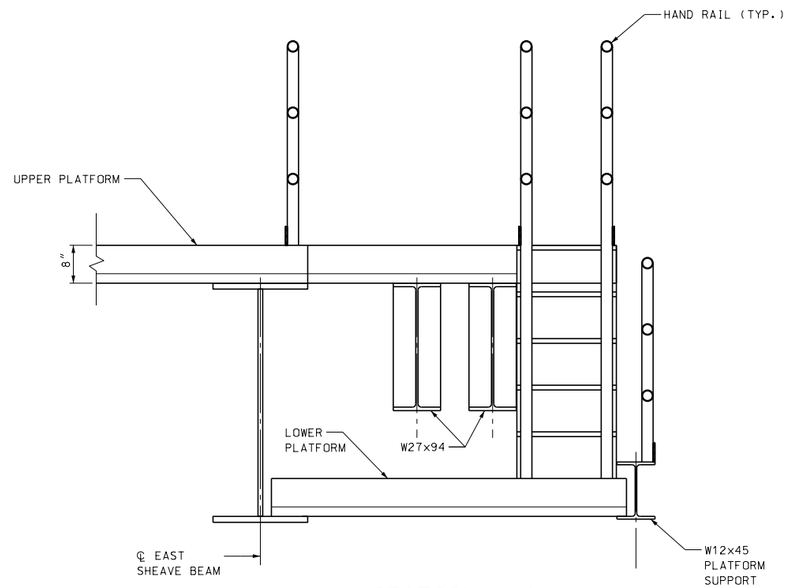

SECTION A-A

3/4"= 1'-0"

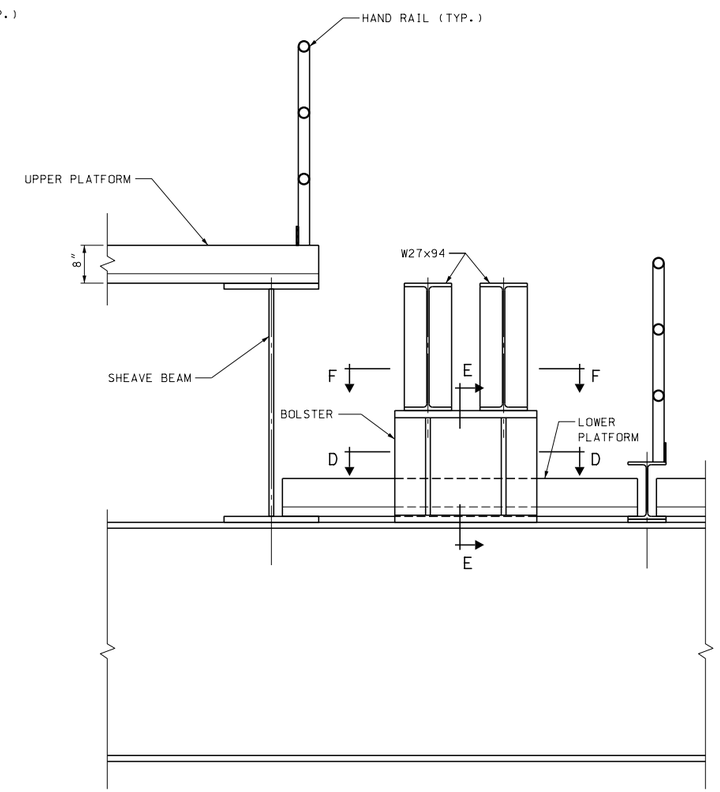

SECTION C-C

3/4"= 1'-0"

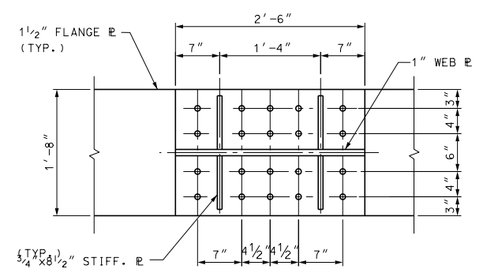

SECTION D-D

1"= 1'-0"

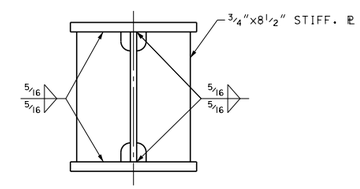

SECTION E-E

1"= 1'-0"

NOTES:

1. FOR LOCATION OF SECTION A-A, SEE BRIDGE SHEET B35.
2. FOR SHEAVE BEAM DETAILS, SEE BRIDGE SHEET B34.
3. FOR SECTIONS F-F AND G-G, SEE BRIDGE SHEET 35C.

80% Submission
January 10, 2012

ARCHER WESTERN CONTRACTORS

HNTB

HNTB Corporation
The HNTB Companies
Engineers Architects Planners

SUBDIRECTORY	.DGN LOCATOR	SHEET SCALE
	$FILENAME$	1/2" = 1'-0"

STATE OF NEW HAMPSHIRE
DEPARTMENT OF TRANSPORTATION * BUREAU OF BRIDGE DESIGN

TOWN PORTSMOUTH, NH. - KITTERY, ME. BRIDGE NO. 247 \ 084 STATE PROJECT 13678F

LOCATION U.S. ROUTE 1 OVER PISCATAQUA RIVER

TOWER - SHEAVE PLATFORM DETAILS - 3 OF 4

BRIDGE SHEET B35B OF

FILE NUMBER 107-1-1

REVISIONS AFTER PROPOSAL		BY	DATE		BY	DATE
	DESIGNED	JN	09/11	CHECKED	TPZ	09/11
	DRAWN	PRE	09/11	CHECKED	GT	09/11
	QUANTITIES	XX	XX/XX	CHECKED	XX	XX/XX

ISSUE DATE	FEDERAL PROJECT NO.	SHEET NO.	TOTAL SHEETS
REV. DATE			

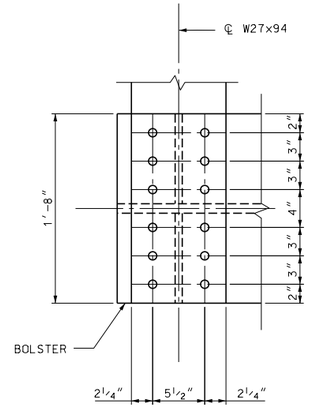

SECTION F-F

1½" = 1'-0"

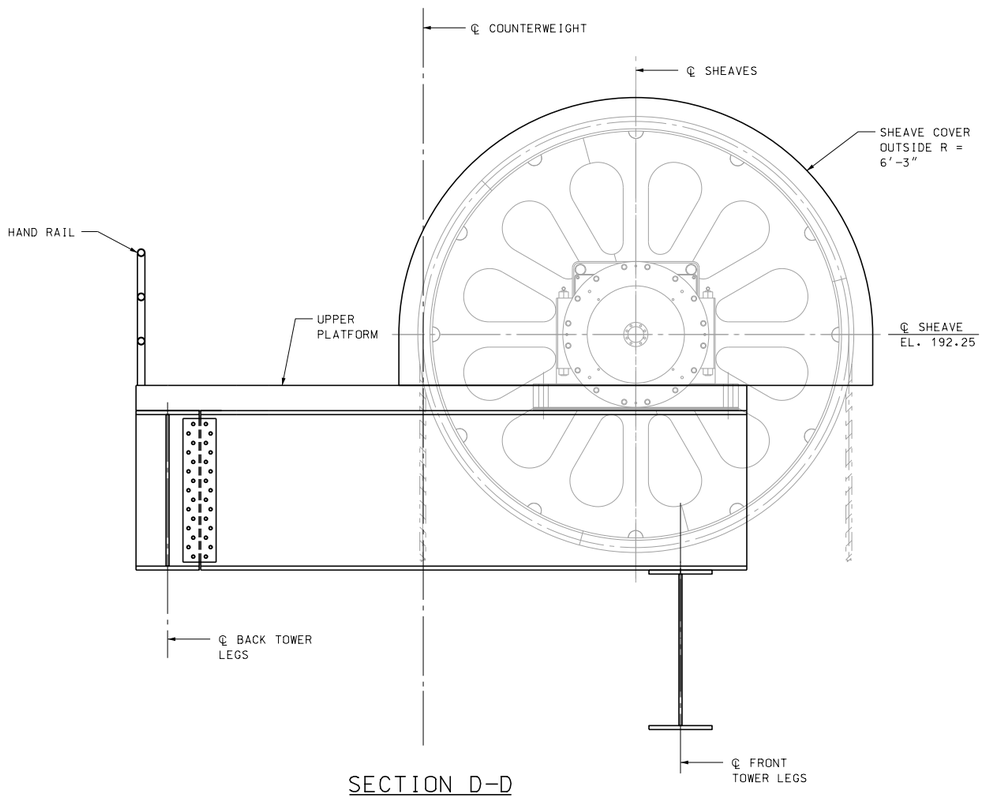

SECTION D-D

½" = 1'-0"

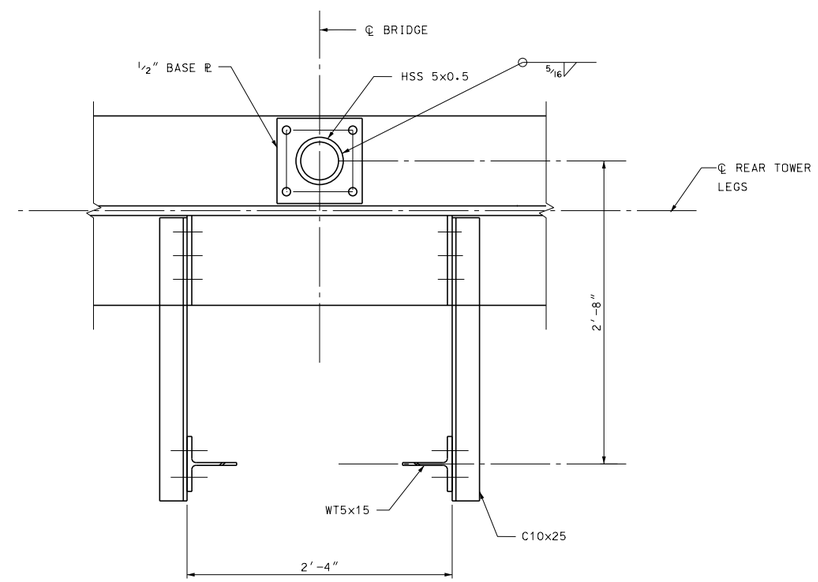

SECTION G-G

1½" = 1'-0"

NOTES:

1. FOR LOCATION OF SECTION D-D, SEE BRIDGE SHEET B35.
2. FOR SHEAVE BEAM DETAILS, SEE BRIDGE SHEET B34.
3. FOR LOCATION OF SECTIONS F-F AND G-G, SEE BRIDGE SHEET B35B.

80% Submission
January 10, 2012

ARCHER WESTERN CONTRACTORS

HNTB
HNTB Corporation
The HNTB Companies
Engineers Architects Planners

STATE OF NEW HAMPSHIRE
DEPARTMENT OF TRANSPORTATION * BUREAU OF BRIDGE DESIGN

TOWN PORTSMOUTH, NH. - KITTERY, ME. BRIDGE NO. 247 \ 084 STATE PROJECT 13678F

LOCATION U.S. ROUTE 1 OVER PISCATAQUA RIVER

TOWER - SHEAVE PLATFORM DETAILS - 4 OF 4

BRIDGE SHEET B35C OF

REVISIONS AFTER PROPOSAL		BY	DATE		BY	DATE
	DESIGNED	JN	09/11	CHECKED	TPZ	09/11
	DRAWN	PRE	09/11	CHECKED	GT	09/11
	QUANTITIES	XX	XX/XX	CHECKED	XX	XX/XX
	ISSUE DATE		FEDERAL PROJECT NO.		SHEET NO.	TOTAL SHEETS
	REV. DATE					

FILE NUMBER 107-1-1

SUBDIRECTORY	.DGN LOCATOR	SHEET SCALE
	$FILENAME$	1/2" = 1'-0"

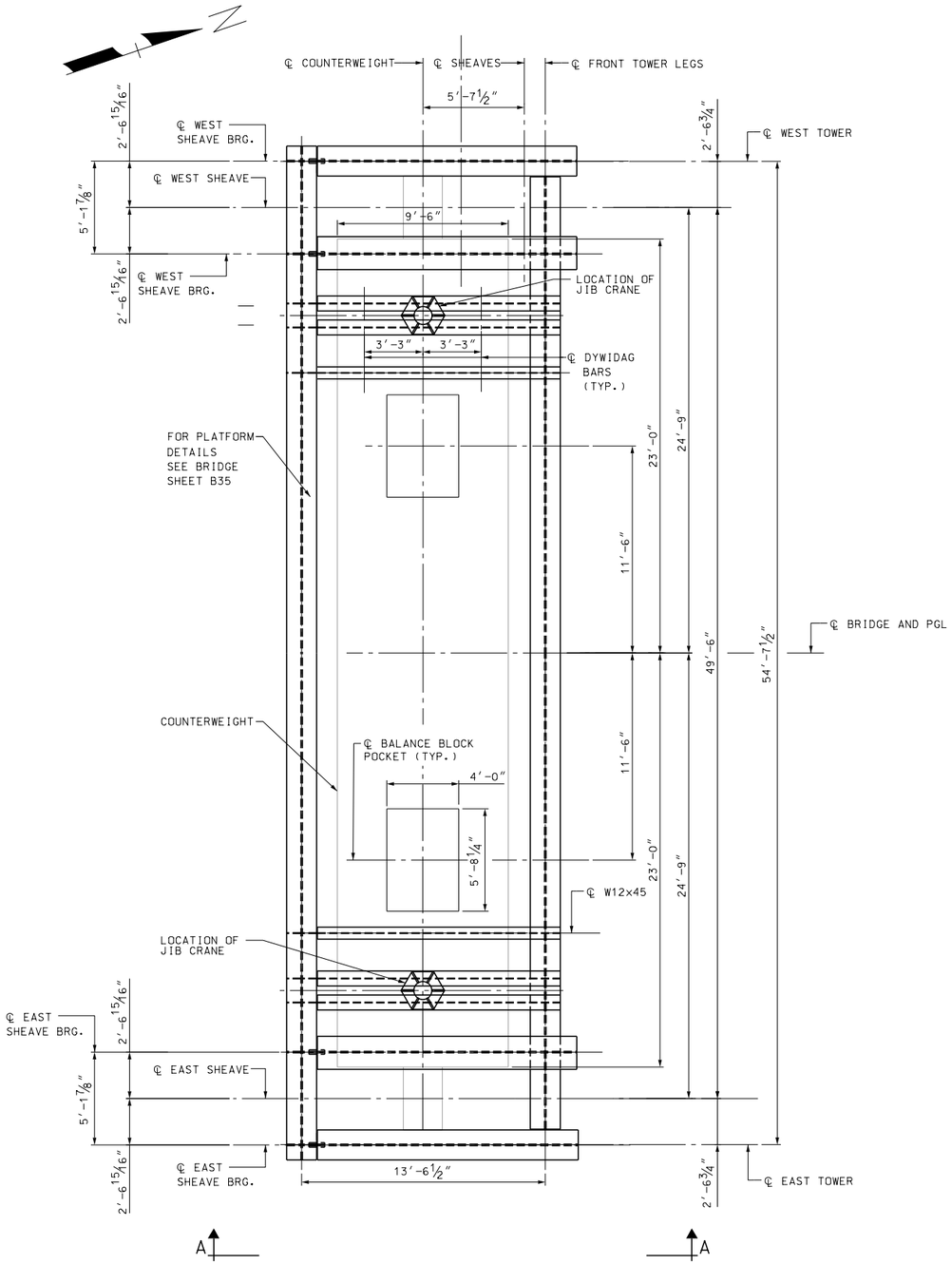

PLAN

(NORTH OPP. HAND)

¼" = 1'-0"

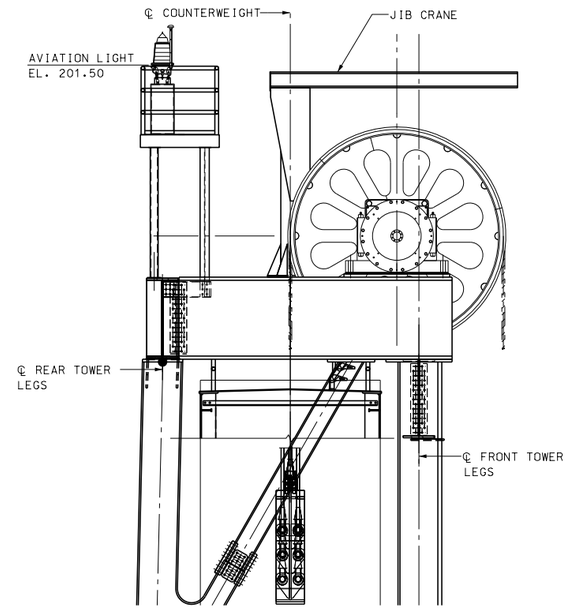

VIEW A-A

¼" = 1'-0"

80% Submission

January 10, 2012

STATE OF NEW HAMPSHIRE

DEPARTMENT OF TRANSPORTATION * BUREAU OF BRIDGE DESIGN

TOWN PORTSMOUTH, NH. - KITTERY, ME. BRIDGE NO. 247 \ 084 STATE PROJECT 13678F

LOCATION U.S. ROUTE 1 OVER PISCATAQUA RIVER

TOWER - JIB CRANE LOCATION

BRIDGE SHEET B35D[F]

FILE NUMBER 107-1-1

REVISIONS AFTER PROPOSAL		BY	DATE		BY	DATE
	DESIGNED	JN	09/11	CHECKED	TPZ	09/11
	DRAWN	PRE	09/11	CHECKED	GT	09/11
	QUANTITIES	XX	XX/XX	CHECKED	XX	XX/XX
	ISSUE DATE		FEDERAL PROJECT NO.		SHEET NO.	TOTAL SHEETS
	REV. DATE					

ARCHER WESTERN CONTRACTORS

HNTB

HNTB Corporation
The HNTB Companies
Engineers Architects Planners

SUBDIRECTORY	.DGN LOCATOR	SHEET SCALE
	$FILENAME$	1/2" = 1'-0"

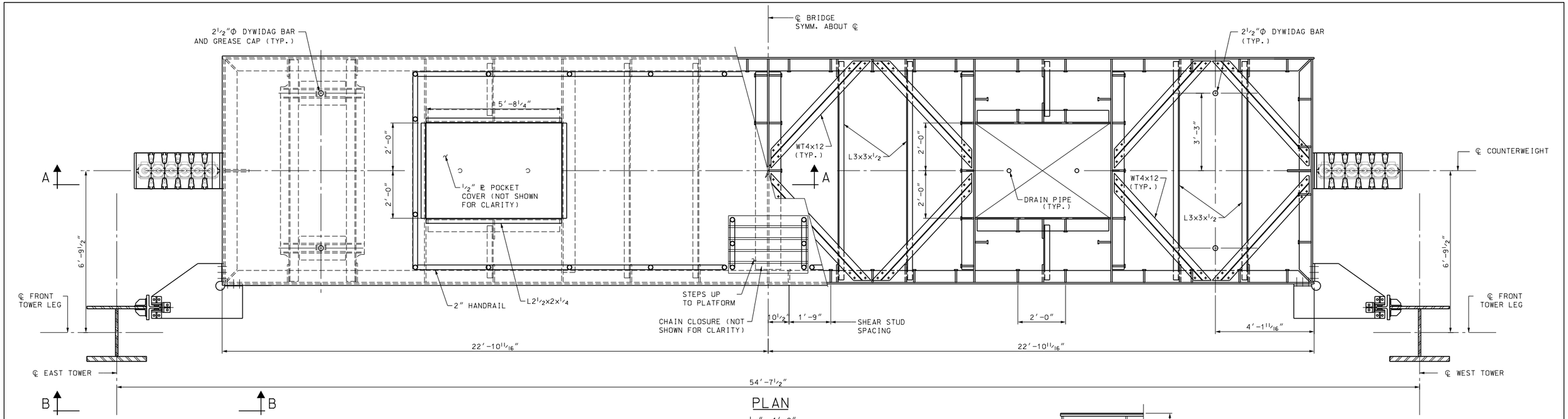

PLAN

1/2"= 1'-0"

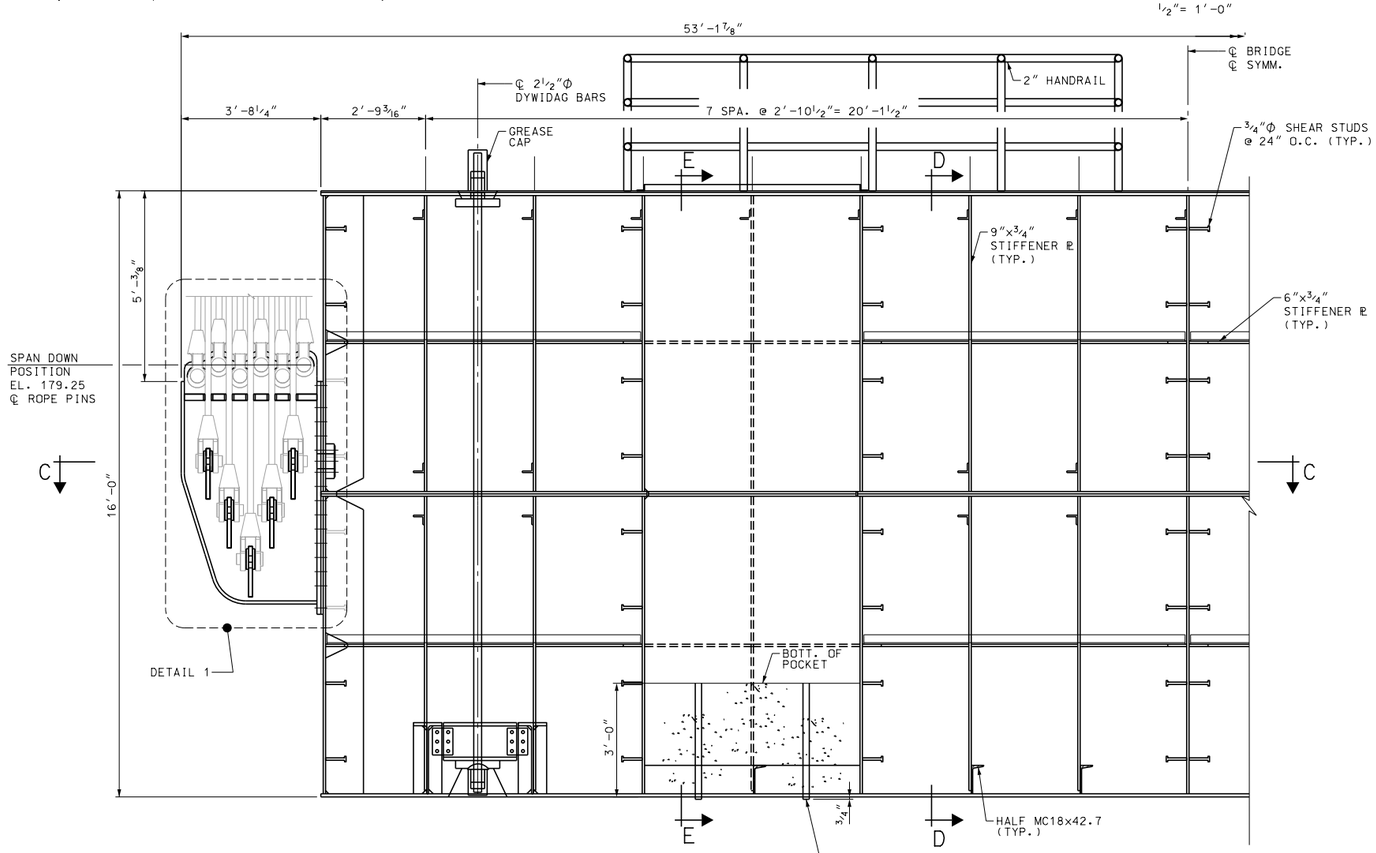

SECTION A-A

1/2"= 1'-0"

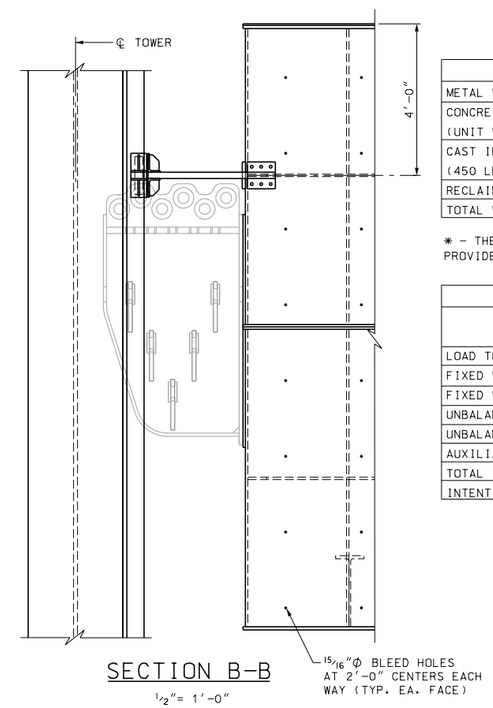

SECTION B-B

1/2"= 1'-0"

COUNTERWEIGHT		
METAL WEIGHT	KIPS	149
CONCRETE WEIGHT (UNIT WEIGHT 145 PCF)	KIPS	878
CAST IRON BALANCING BLOCKS ✱ (450 LB PER BLOCK)	KIPS	42
RECLAIMED CAST IRON BLOCKS (CAST INTO CONRETE)		109
TOTAL WEIGHT EACH CTWT	KIPS	1,179

✱ - THE TOTAL QUANTITY OF CAST IRON BALANCE BLOCKS PROVIDED BY THE CONTRACTOR SHALL BE XXX,XXX LBS.

BALANCE OF LIFTSPAN (KIPS)				
	SPAN DOWN		SPAN UP	
	SPAN SIDE	CTWT SIDE	SPAN SIDE	CTWT SIDE
LOAD TO LIFT	2,390		2,390	
FIXED WEIGHT CTWT		2,356		2,356
FIXED WEIGHT ROPES				
UNBALANCED WEIGHT OF UPHAUL ROPES		-		-4
UNBALANCED WEIGHT OF DOWNHAUL ROPES		-60		48
AUXILIARY COUNTERWEIGHT CHAINS		86		-
TOTAL		2,381		2,399
INTENTIONAL IMBALANCE		9		-9

NOTES:

1. SOUTH TOWER COUNTERWEIGHT SHOWN. NORTH TOWER COUNTERWEIGHT OPPOSITE HAND.
2. COUNTERWEIGHT CONCRETE DESIGN UNIT WEIGHT IS BASED ON THEORETICAL WEIGHT OF THE SPAN AND IS APPROXIMATELY 145 LB/FT.^{3}
3. BALANCE BLOCKS SHALL CAST IRON AND DETAILED AS SHOWN.
4. FOR COUNTERWEIGHT CONNECTION DETAIL 1, SEE BRIDGE SHEET B37.

80% Submission
January 10, 2012

ARCHER WESTERN CONTRACTORS

HNTB
HNTB Corporation
The HNTB Companies
Engineers Architects Planners

STATE OF NEW HAMPSHIRE
DEPARTMENT OF TRANSPORTATION * BUREAU OF BRIDGE DESIGN

TOWN PORTSMOUTH, NH. - KITTERY, ME. BRIDGE NO. 247\084 STATE PROJECT 13678F

LOCATION U.S. ROUTE 1 OVER PISCATAQUA RIVER

COUNTERWEIGHT DETAILS 1 OF 2

BRIDGE SHEET B36 OF

FILE NUMBER 107-1-1

TOTAL SHEETS

REVISIONS AFTER PROPOSAL	BY	DATE		BY	DATE
DESIGNED	RMW	09/11	CHECKED	CSE	09/11
DRAWN	SPL	09/11	CHECKED	JN	09/11
QUANTITIES	XX	XX/XX	CHECKED	XX	XX/XX
ISSUE DATE		FEDERAL PROJECT NO.		SHEET NO.	
REV. DATE					

SUBDIRECTORY	.DGN LOCATOR	SHEET SCALE
	$FILENAME$	AS NOTED

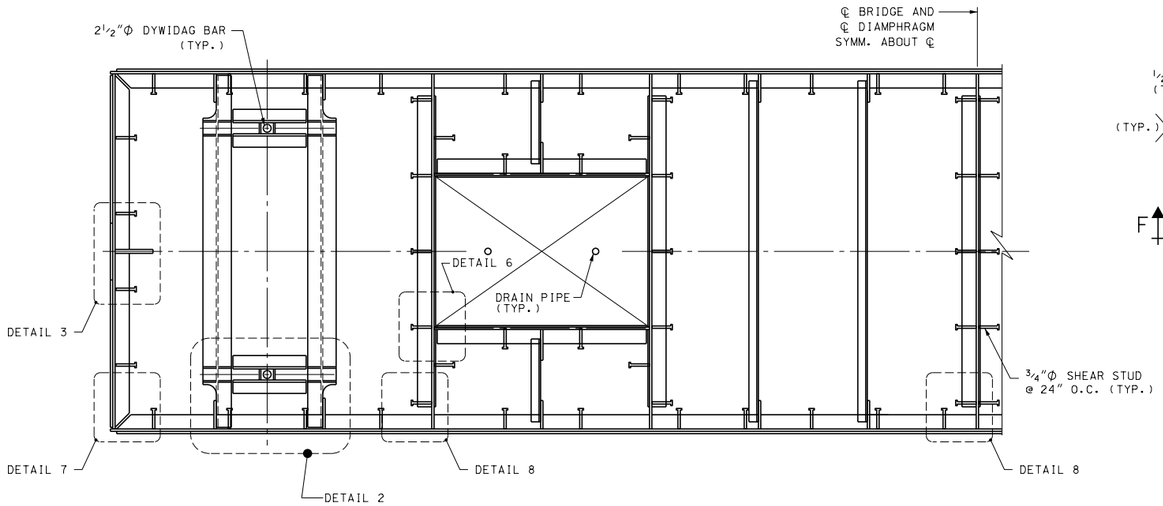

SECTION C-C

1/2"= 1'-0"

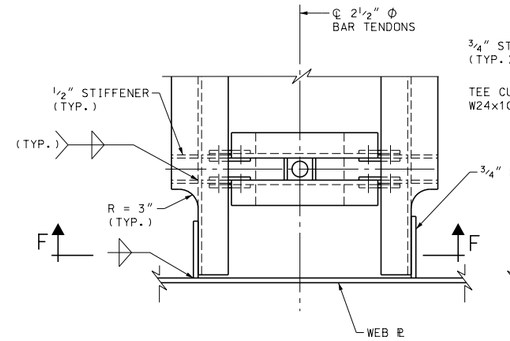

DETAIL 2

1" = 1'-0"

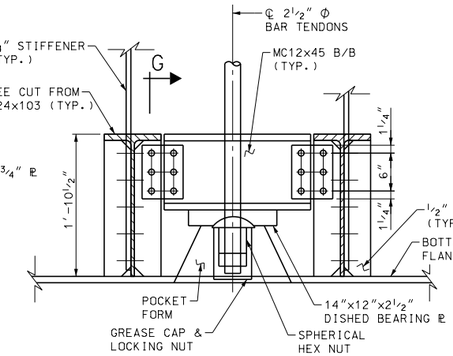

SECTION F-F

1" = 1'-0"

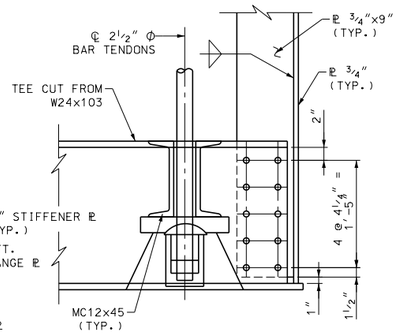

SECTION G-G

1" = 1'-0"

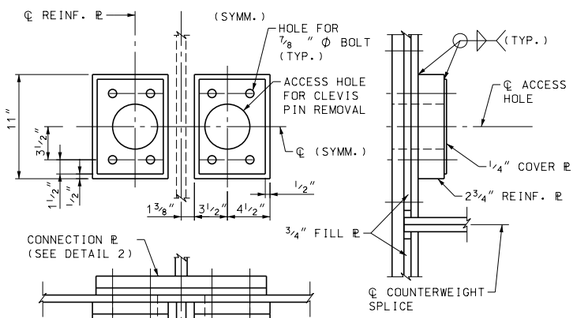

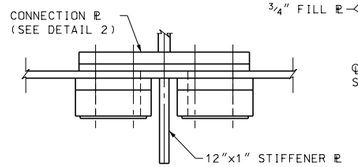

DETAIL 3

1 1/2" = 1'-0"

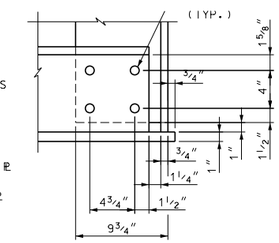

DETAIL 5

1 1/2" = 1'-0"

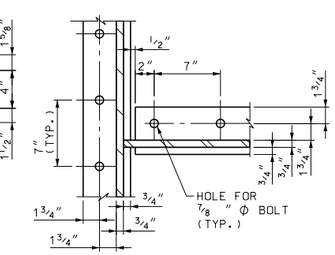

DETAIL 6

1 1/2" = 1'-0"

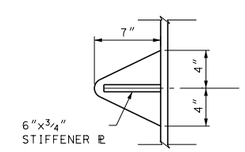

DETAIL 4

1 1/2" = 1'-0"

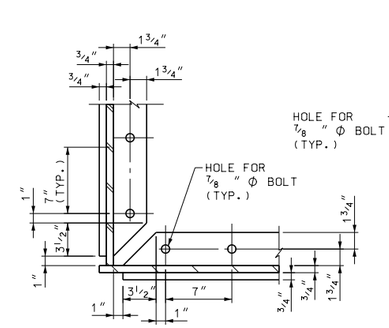

DETAIL 7

1 1/2" = 1'-0"

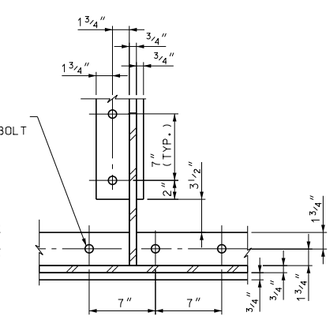

DETAIL 8

1 1/2" = 1'-0"

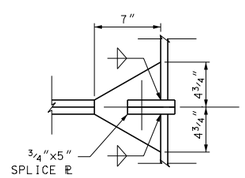

DETAIL 9

1 1/2" = 1'-0"

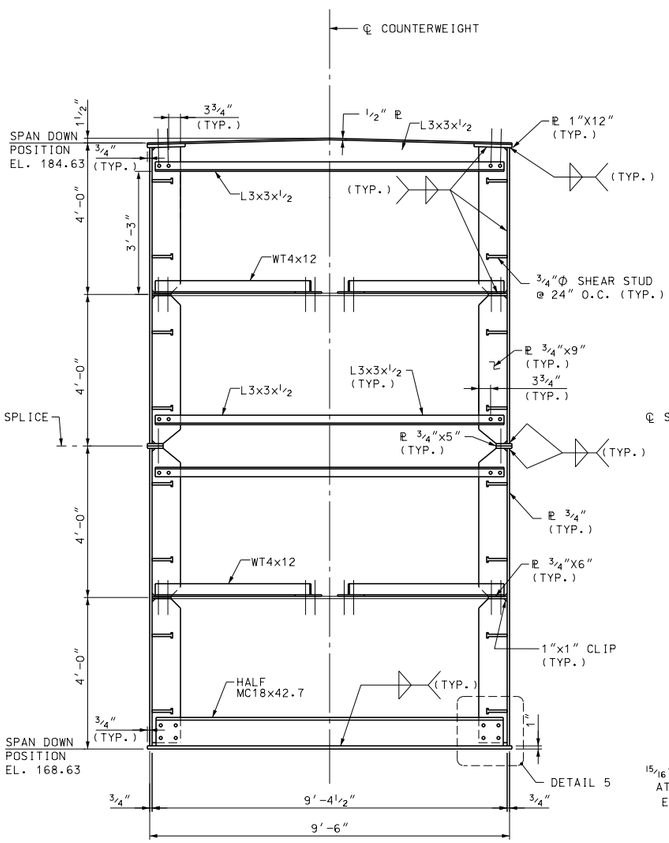

SECTION D-D

1/2"= 1'-0"

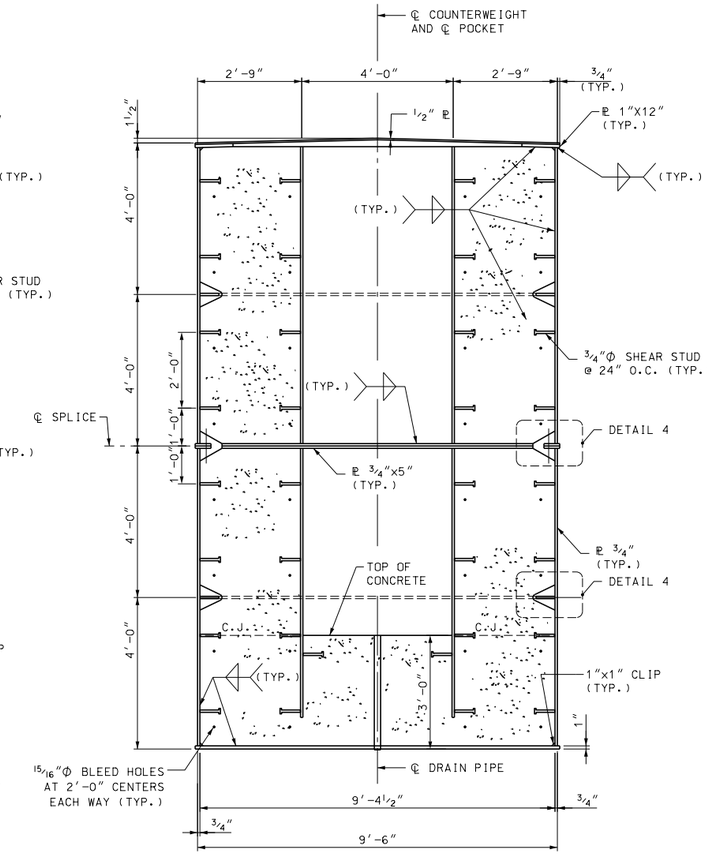

SECTION E-E

1/2"= 1'-0"

NOTES:

1. SOUTH TOWER COUNTERWEIGHT SHOWN. NORTH TOWER COUNTERWEIGHT OPPOSITE HAND.
2. COUNTERWEIGHT CONCRETE DESIGN UNIT WEIGHT IS BASED ON THEORETICAL WEIGHT OF THE SPAN AND IS APPROXIMATELY 145 ³LB/FT.
3. BALANCE BLOCKS SHALL CAST IRON AND DETAILED AS SHOWN.
4. FOR COUNTERWEIGHT CONNECTION DETAIL 2, SEE BRIDGE SHEET B37.
5. ALL BOLTS SHALL BE ✱" DIA. HIGH STRENGTH ASTM A325 AND SHALL BE GALVANIZED PER THE REQUIREMENTS OF ASTM A153. NUTS AND WASHERS SHALL BE A563 AND F436 RESPECTIVELY, AND SHALL BE GALVANIZED PER REQUIREMENTS OF ASTM A153. ALL HOLES FOR ✱" DIA. BOLTS SHALL BE ✱" DIA. UNLESS NOTED OTHERWISE.

80% Submission
January 10, 2012

ARCHER WESTERN CONTRACTORS

HNTB
HNTB Corporation
The HNTB Companies
Engineers Architects Planners

SUBDIRECTORY	.DGN LOCATOR	SHEET SCALE
	$FILENAME$	AS NOTED

STATE OF NEW HAMPSHIRE
DEPARTMENT OF TRANSPORTATION * BUREAU OF BRIDGE DESIGN

TOWN PORTSMOUTH, NH. - KITTERY, ME. BRIDGE NO. 247 \ 084 STATE PROJECT 13678F

LOCATION U.S. ROUTE 1 OVER PISCATAQUA RIVER

COUNTERWEIGHT DETAILS 2 OF 2

BRIDGE SHEET: B36C OF

REVISIONS AFTER PROPOSAL		BY	DATE		BY	DATE
	DESIGNED	RMW	09/11	CHECKED	CSE	09/11
	DRAWN	SPL	09/11	CHECKED	JN	09/11
	QUANTITIES	XX	XX/XX	CHECKED	XX	XX/XX
	ISSUE DATE			FEDERAL PROJECT NO.	SHEET NO.	
	REV. DATE					

FILE NUMBER: 107-1-1

TOTAL SHEETS

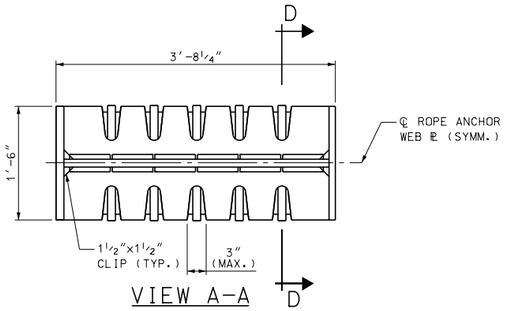

VIEW A-A
1" = 1'-0"

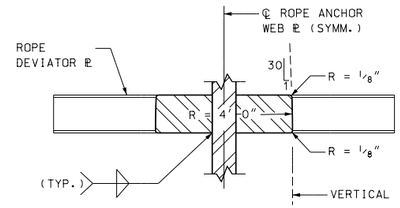

VIEW D-D
3" = 1'-0"

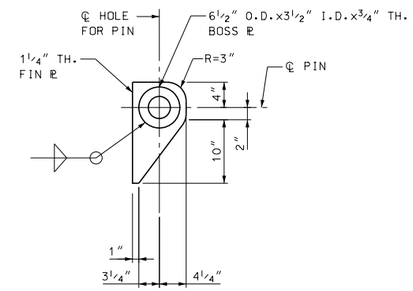

FIN PLATE
1" = 1'-0"

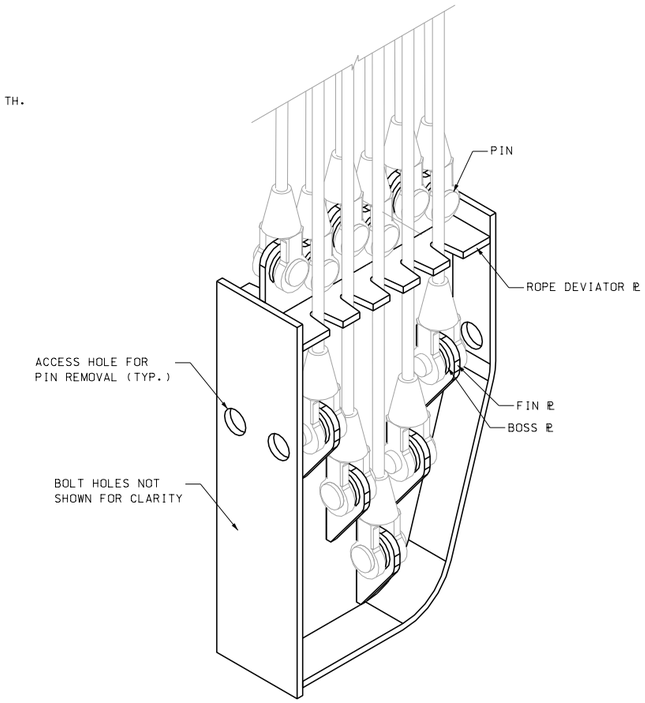

ISOMETRIC VIEW
1" = 1'-0"

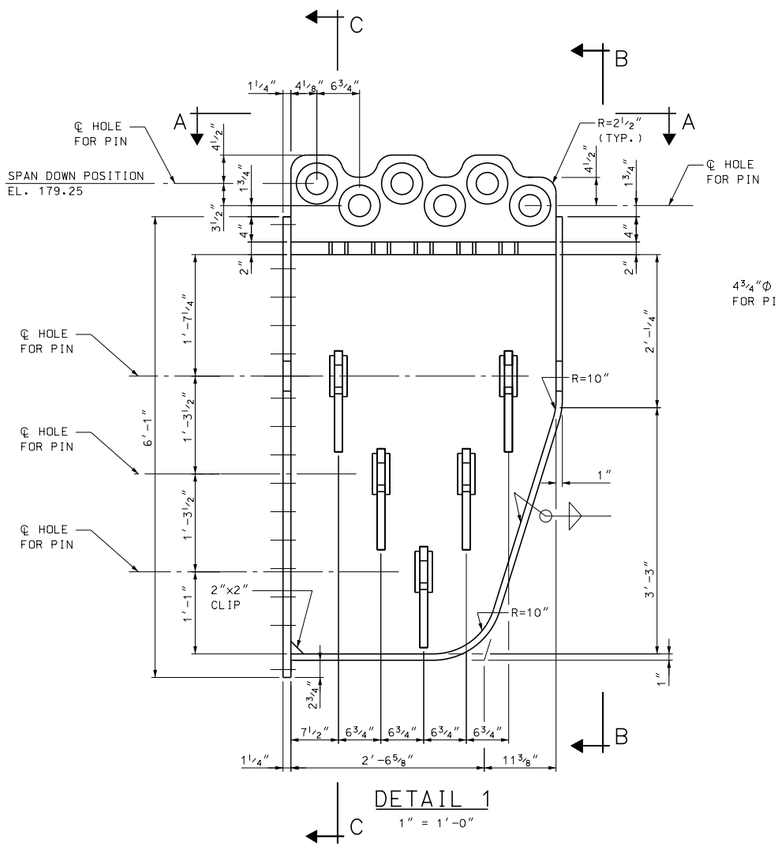

DETAIL 1
1" = 1'-0"

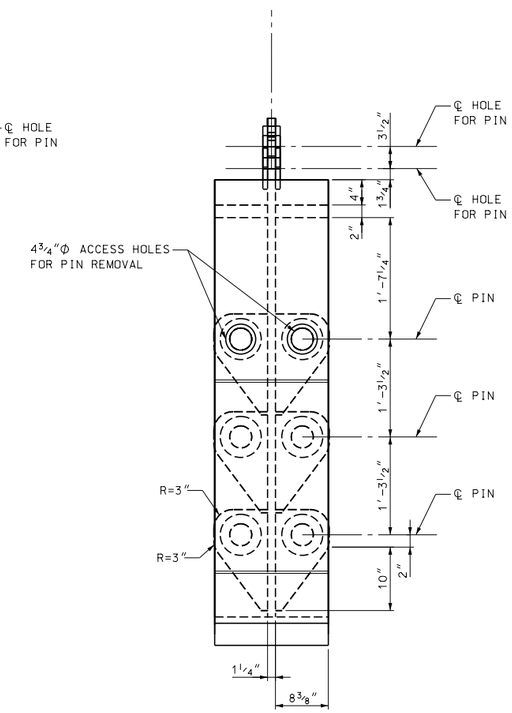

VIEW B-B
1" = 1'-0"

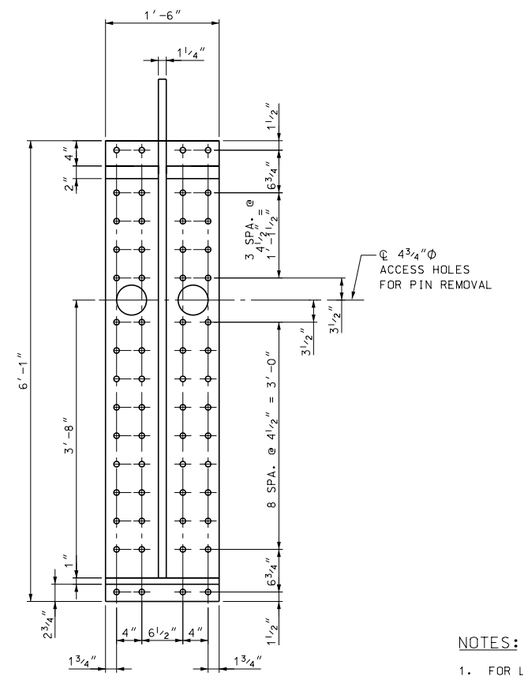

VIEW C-C
1" = 1'-0"

NOTES:

1. FOR LOCATION OF DETAIL 2, SEE BRIDGE SHEET B3G.
2. ALL BOLTS SHALL BE 7/8" DIA. HIGH STRENGTH ASTM A325 AND SHALL BE GALVANIZED PER THE REQUIREMENTS OF ASTM A153. NUTS AND WASHERS SHALL BE A5G3 AND F43G RESPECTIVELY, AND SHALL BE GALVANIZED PER REQUIREMENTS OF ASTM A153. ALL HOLES FOR 7/8" DIA. BOLTS SHALL BE 15/16" DIA. UNLESS NOTED OTHERWISE.
3. PIN HOLES SHALL HAVE RC8 FIT, AND SHALL RECEIVE G3 MICROINCH FINISH.

80% Submission
January 10, 2012

STATE OF NEW HAMPSHIRE
DEPARTMENT OF TRANSPORTATION * BUREAU OF BRIDGE DESIGN

TOWN PORTSMOUTH, NH. - KITTERY, ME. BRIDGE NO. 247 \ 084 STATE PROJECT 13678F

LOCATION U.S. ROUTE 1 OVER PISCATAQUA RIVER

COUNTERWEIGHT ROPE CONNECTION DETAILS

ARCHER WESTERN CONTRACTORS

HNTB
HNTB Corporation
The HNTB Companies
Engineers Architects Planners

REVISIONS AFTER PROPOSAL		BY	DATE		BY	DATE
	DESIGNED	RMW	09/11	CHECKED	TPZ	09/11
	DRAWN	RMW	09/11	CHECKED	CSE	09/11
	QUANTITIES	XX	XX/XX	CHECKED	XX	XX/XX

SUBDIRECTORY	.DGN LOCATOR	SHEET SCALE	ISSUE DATE	FEDERAL PROJECT NO.	SHEET NO.	TOTAL SHEETS
	$FILENAME$	1 1/2" = 1'-0"	REV. DATE			

BRIDGE SHEET B37 OF

FILE NUMBER 107-1-1

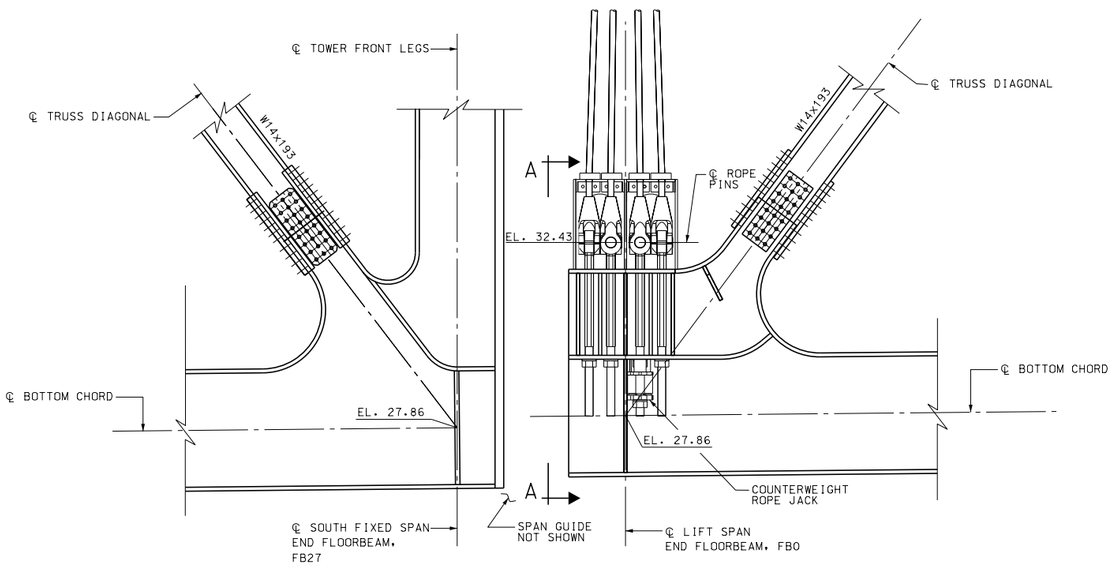

DETAIL 1

(NORTH OPP. HAND)

1/2"= 1'-0"

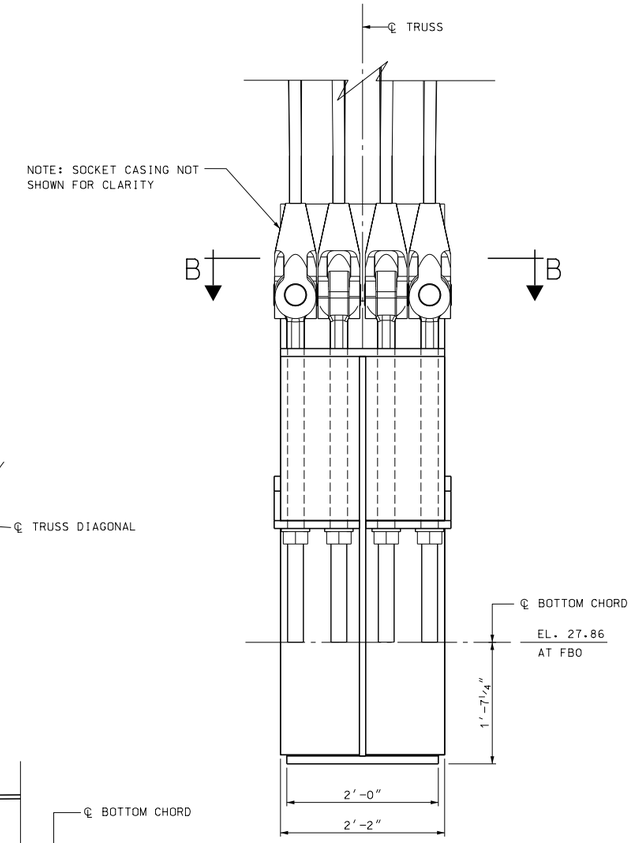

VIEW A-A

1"= 1'-0"

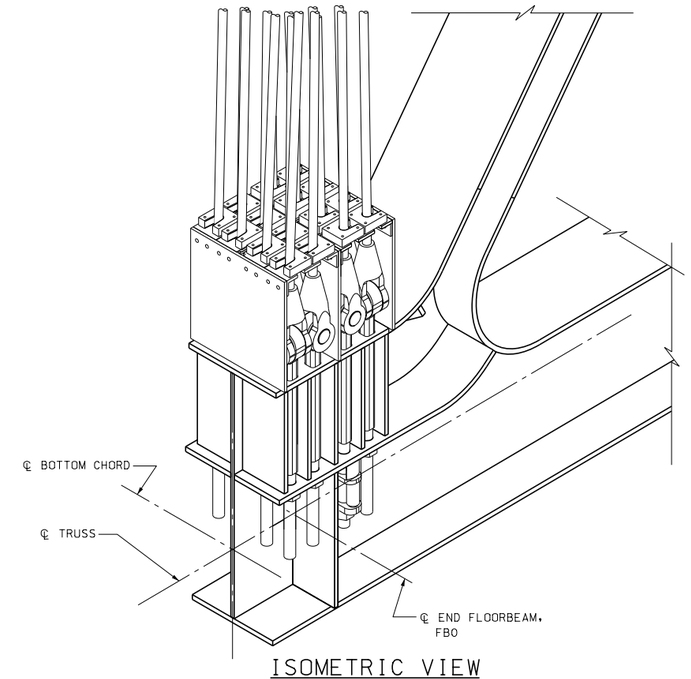

ISOMETRIC VIEW

N.T.S.

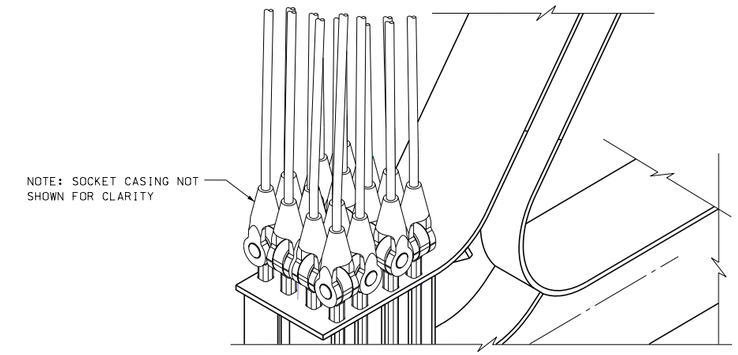

ISOMETRIC VIEW

N.T.S.

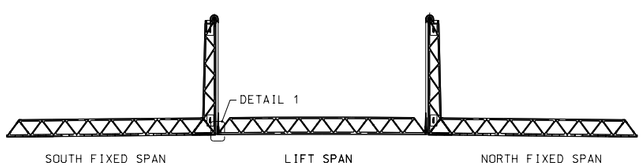

KEY ELEVATION

N.T.S.

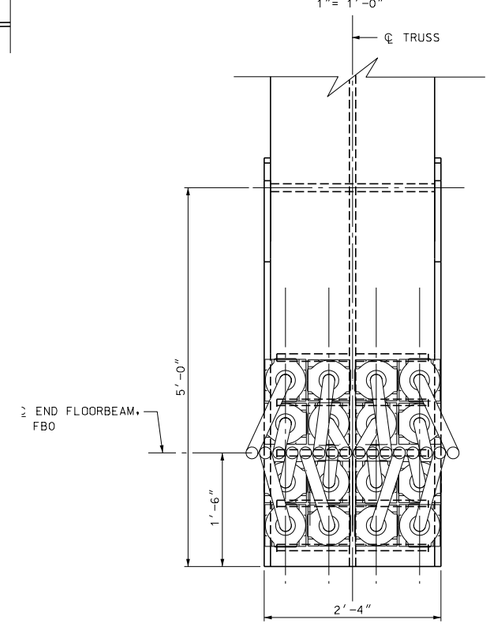

VIEW B-B

1"= 1'-0"

NOTES:

1. FOR TYPICAL FIXED SPAN TRUSS GEOMETRY AND LIFT SPAN TRUSS GEOMETRY, SEE BRIDGE SHEETS B16 AND B42 RESPECTIVELY.

80% Submission
January 10, 2012

ARCHER WESTERN CONTRACTORS

HNTB

HNTB Corporation
The HNTB Companies
Engineers Architects Planners

SUBDIRECTORY	.DGN LOCATOR	SHEET SCALE
	$FILENAME$	AS NOTED

STATE OF NEW HAMPSHIRE

DEPARTMENT OF TRANSPORTATION * BUREAU OF BRIDGE DESIGN

TOWN PORTSMOUTH, NH. - KITTERY, ME. BRIDGE NO. 247 \ 084 STATE PROJECT 13678F

LOCATION U.S. ROUTE 1 OVER PISCATAQUA RIVER

COUNTERWEIGHT ROPE CONNECTION AT LIFT SPAN

REVISIONS AFTER PROPOSAL		BY	DATE		BY	DATE
	DESIGNED	GT	09/11	CHECKED	TPZ	09/11
	DRAWN	JN	09/11	CHECKED	CSE	09/11
	QUANTITIES	XX	XX/XX	CHECKED	XX	XX/XX
	ISSUE DATE		FEDERAL PROJECT NO.		SHEET NO.	TOTAL SHEETS
	REV. DATE					

BRIDGE SHEET B38 OF

FILE NUMBER 107-1-1

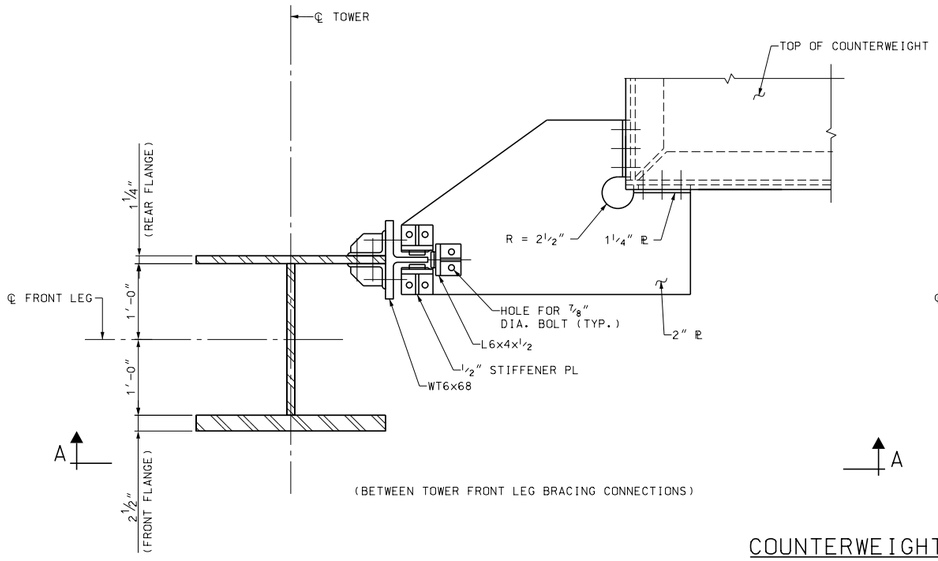

(BETWEEN TOWER FRONT LEG BRACING CONNECTIONS)

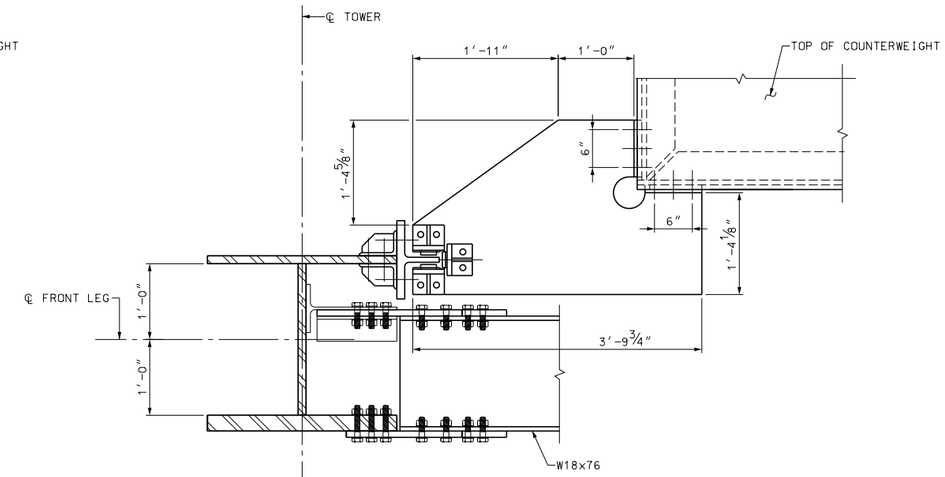

(AT TOWER FRONT LEG BRACING CONNECTION)

COUNTERWEIGHT GUIDE

1"= 1'-0"

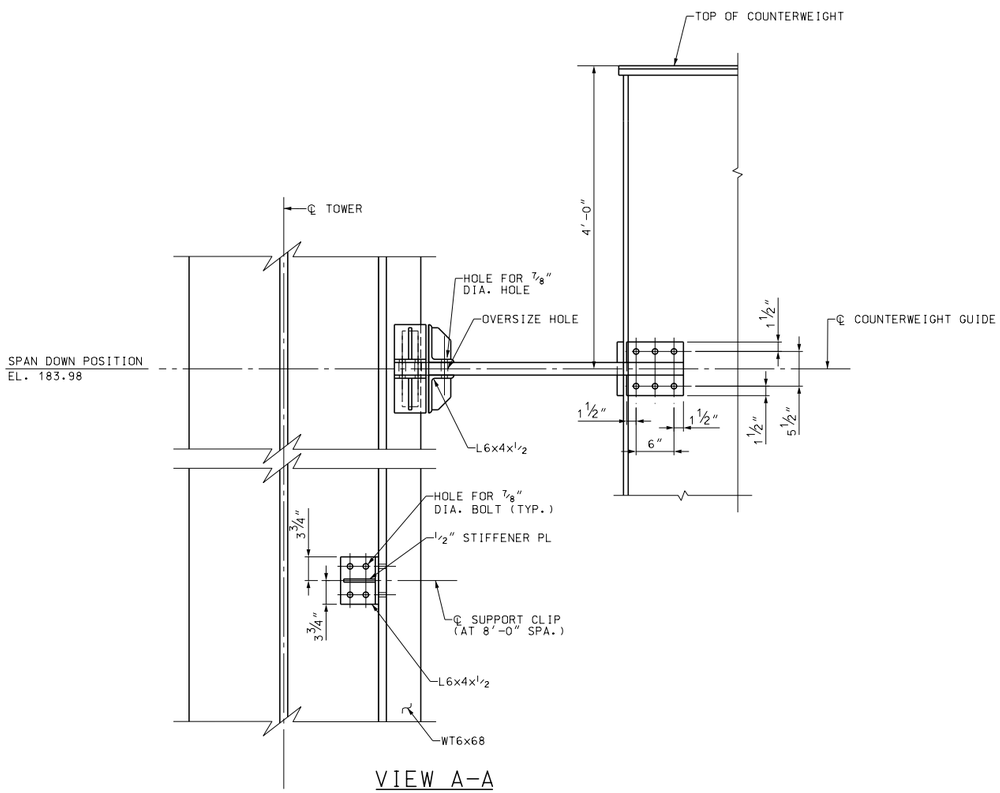

VIEW A-A

1"= 1'-0"

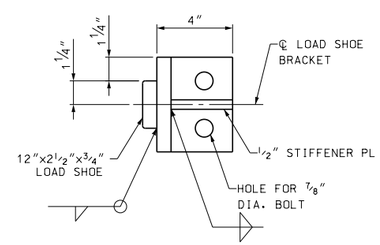

LOAD SHOE BRACKET

3"= 1'-0"

NOTES:

1. ALL STRUCTURAL STEEL SHALL BE AASHTO M270 GRADE 50 UNLESS OTHERWISE NOTED.
2. ALL BOLTS SHALL BE ⅞" DIA. HIGH STRENGTH ASTM A325 AND SHALL BE GALVANIZED PER THE REQUIREMENTS OF ASTM A153. NUTS AND WASHERS SHALL BE A563 AND F43G RESPECTIVELY, AND SHALL BE GALVANIZED PER REQUIREMENTS OF ASTM A153. ALL HOLES FOR ⅞" DIA. BOLTS SHALL BE 15/16" DIA. UNLESS NOTED OTHERWISE.

80% Submission
January 10, 2012

ARCHER WESTERN CONTRACTORS

HNTB
HNTB Corporation
The HNTB Companies
Engineers Architects Planners

SUBDIRECTORY	.DGN LOCATOR	SHEET SCALE
	$FILENAME$	AS NOTED

STATE OF NEW HAMPSHIRE
DEPARTMENT OF TRANSPORTATION * BUREAU OF BRIDGE DESIGN

TOWN PORTSMOUTH, NH. - KITTERY, ME. BRIDGE NO. 247 \ 084 STATE PROJECT 13678F

LOCATION U.S. ROUTE 1 OVER PISCATAQUA RIVER

COUNTERWEIGHT GUIDE DETAILS

BRIDGE SHEET B38A OF

REVISIONS AFTER PROPOSAL		BY	DATE		BY	DATE
	DESIGNED	GT	09/11	CHECKED	TPZ	09/11
	DRAWN	PRE	09/11	CHECKED	CSE	09/11
	QUANTITIES	XX	XX/XX	CHECKED	XX	XX/XX
	ISSUE DATE		FEDERAL PROJECT NO.		SHEET NO.	TOTAL SHEETS
	REV. DATE					

FILE NUMBER 107-1-1

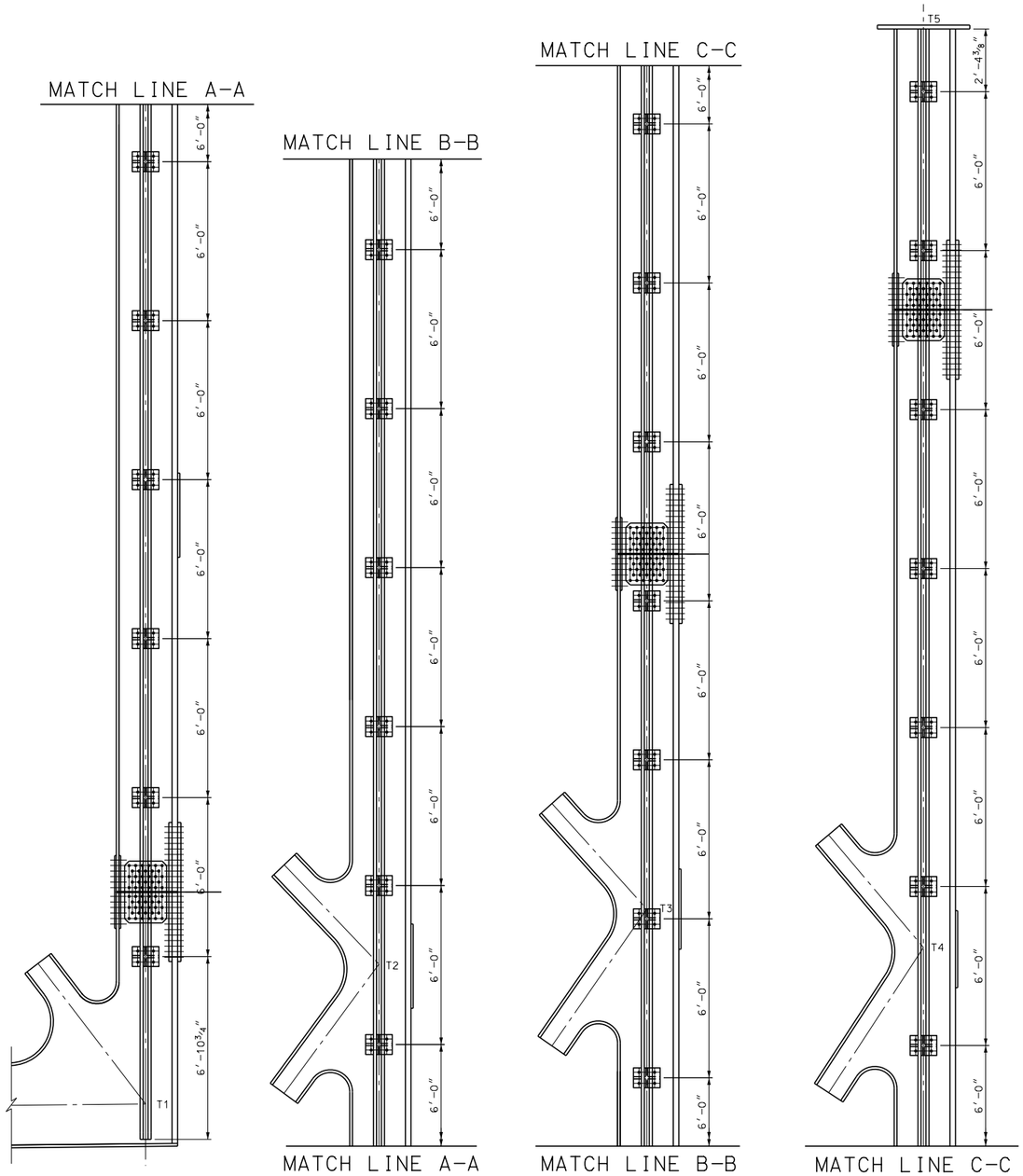

SOUTH TOWER EAST ELEVATION

3/8" = 1'-0"

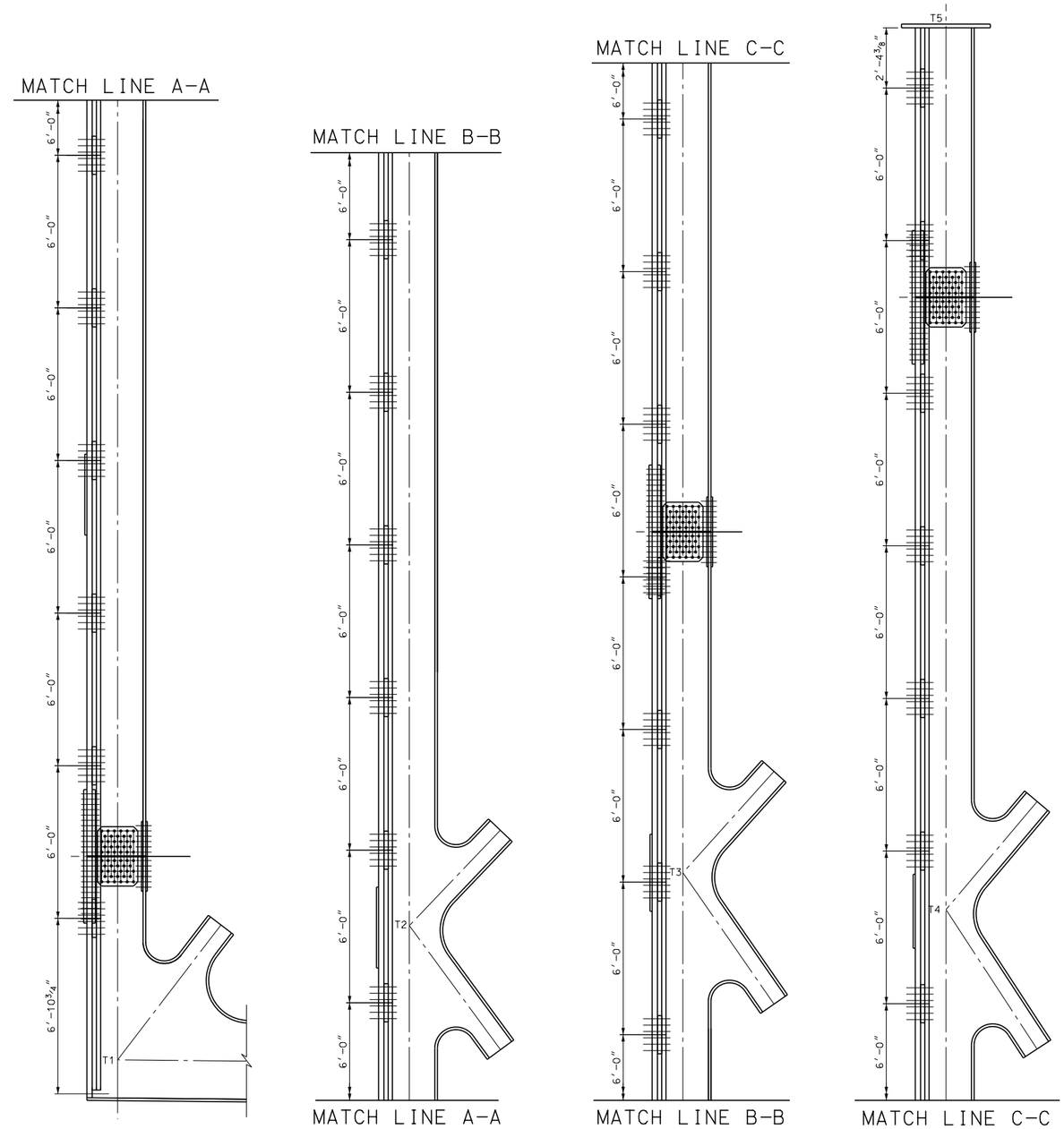

NORTH TOWER EAST ELEVATION

3/8" = 1'-0"

80% Submission
January 10, 2012

NOTES:

1. XXXXXXXXXXXXXXXXXXXXXXXX.

ARCHER WESTERN CONTRACTORS

HNTB

HNTB Corporation
The HNTB Companies
Engineers Architects Planners

SUBDIRECTORY	.DGN LOCATOR	SHEET SCALE
	$FILENAME$	AS NOTED

STATE OF NEW HAMPSHIRE
DEPARTMENT OF TRANSPORTATION * BUREAU OF BRIDGE DESIGN

TOWN PORTSMOUTH, NH. - KITTERY, ME. BRIDGE NO. 247 \ 084 STATE PROJECT 13678F

LOCATION U.S. ROUTE 1 OVER PISCATAQUA RIVER

SPAN GUIDE LAYOUT

REVISIONS AFTER PROPOSAL		BY	DATE		BY	DATE
	DESIGNED	GT	09/11	CHECKED	CSE	09/11
	DRAWN	PRE	09/11	CHECKED	JN	09/11
	QUANTITIES	XX	XX/XX	CHECKED	XX	XX/XX
	ISSUE DATE		FEDERAL PROJECT NO.		SHEET NO.	
	REV. DATE					

BRIDGE SHEET B38B$F

FILE NUMBER 107-1-1

TOTAL SHEETS

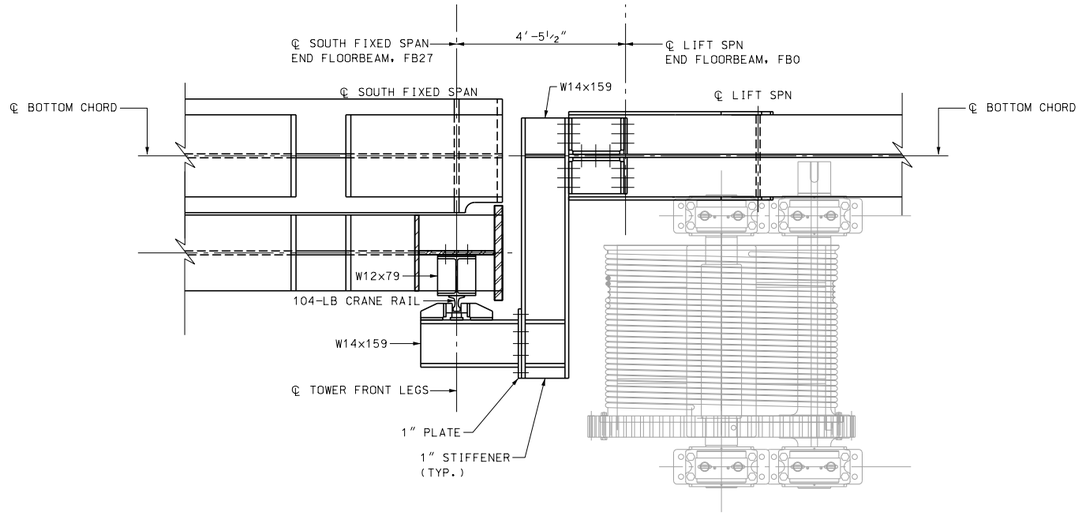

VIEW A-A

½″= 1′-0″

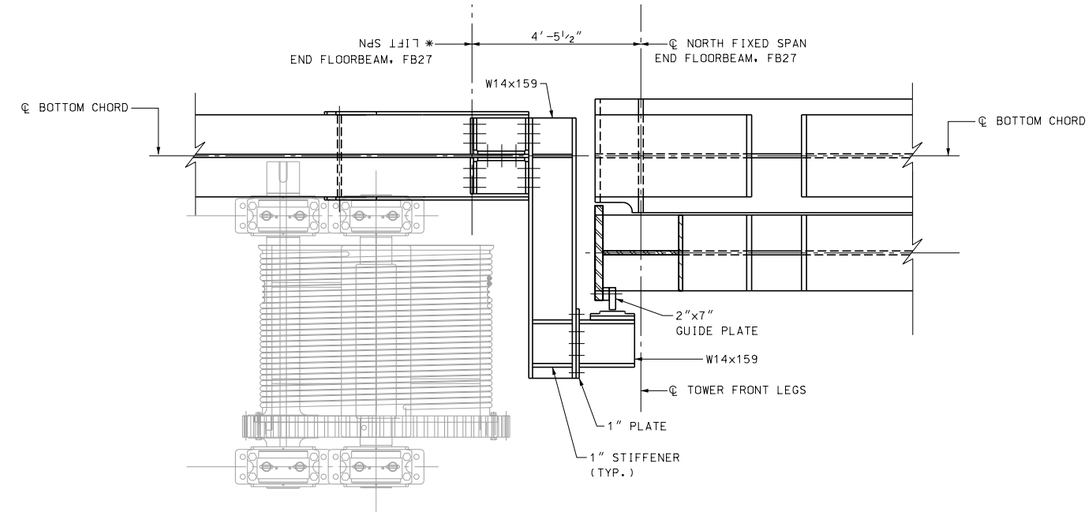

VIEW B-B

½″= 1′-0″

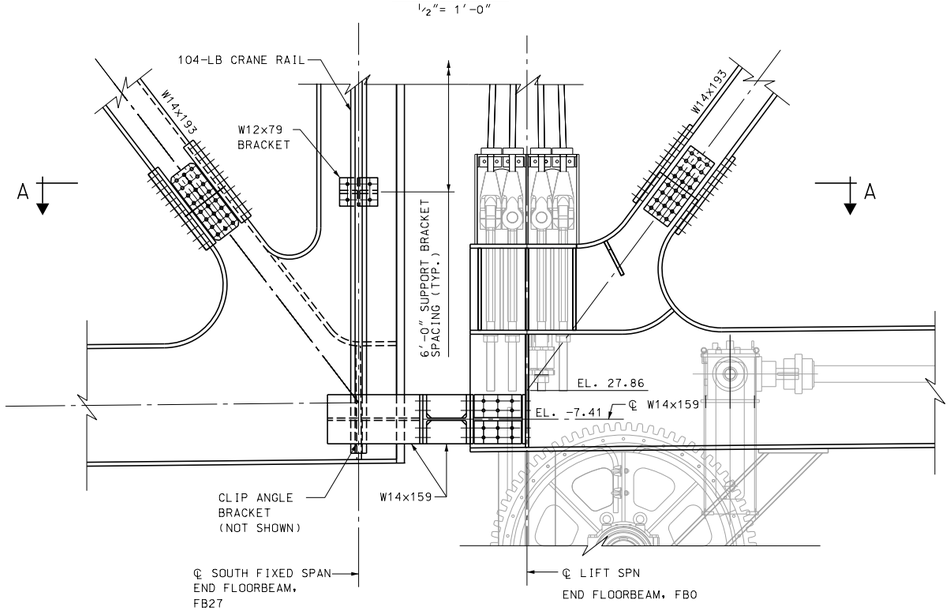

DETAIL 1

(SOUTH EAST SHOWN, SOUTH WEST OPP. HAND)

½″= 1′-0″

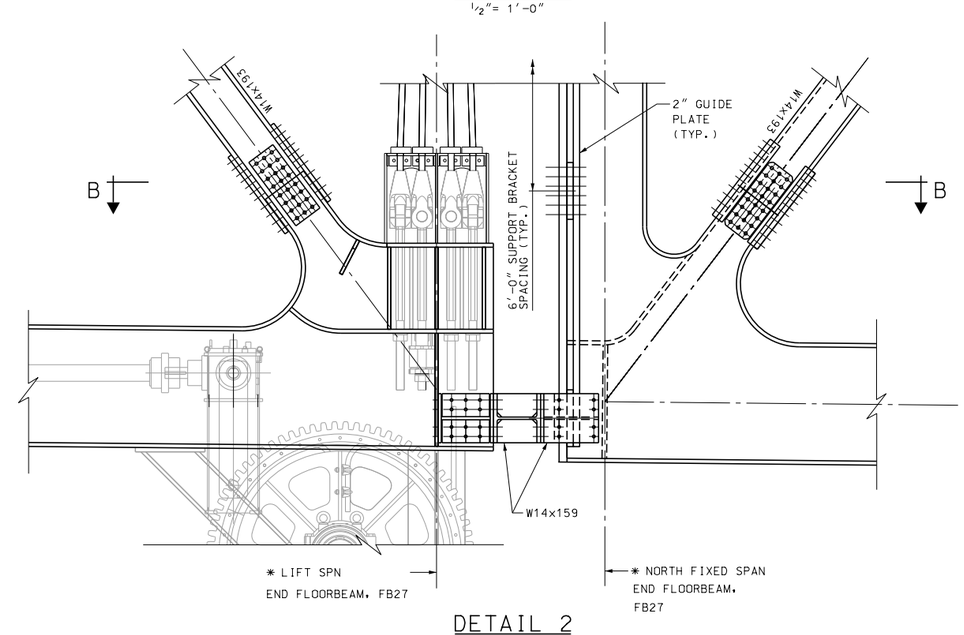

DETAIL 2

(NORTH EAST SHOWN, NORTH WEST OPP. HAND)

½″= 1′-0″

NOTES:

1. ALL STRUCTURAL STEEL SHALL BE AASHTO M270 GRADE 50 UNLESS OTHERWISE NOTED.
2. ALL BOLTS SHALL BE ⅞″ DIA. HIGH STRENGTH ASTM A325 AND SHALL BE GALVANIZED PER THE REQUIREMENTS OF ASTM A153. NUTS AND WASHERS SHALL BE A563 AND F436 RESPECTIVELY, AND SHALL BE GALVANIZED PER REQUIREMENTS OF ASTM A153. ALL HOLES FOR ⅞″ DIA. BOLTS SHALL BE 15/16″ DIA. UNLESS NOTED OTHERWISE.

80% Submission
January 10, 2012

ARCHER WESTERN CONTRACTORS

HNTB
HNTB Corporation
The HNTB Companies
Engineers Architects Planners

SUBDIRECTORY	.DGN LOCATOR	SHEET SCALE
	$FILENAME$	

STATE OF NEW HAMPSHIRE
DEPARTMENT OF TRANSPORTATION * BUREAU OF BRIDGE DESIGN

TOWN PORTSMOUTH, NH. - KITTERY, ME. BRIDGE NO. 247 \ 084 STATE PROJECT 13678F

LOCATION U.S. ROUTE 1 OVER PISCATAQUA RIVER

SPAN GUIDE DETAILS

BRIDGE SHEET B38C OF

REVISIONS AFTER PROPOSAL	BY	DATE		BY	DATE
	DESIGNED			CHECKED	
	DRAWN			CHECKED	
	QUANTITIES			CHECKED	
	ISSUE DATE		FEDERAL PROJECT NO.		SHEET NO.
	REV. DATE				

FILE NUMBER 107-1-1

TOTAL SHEETS

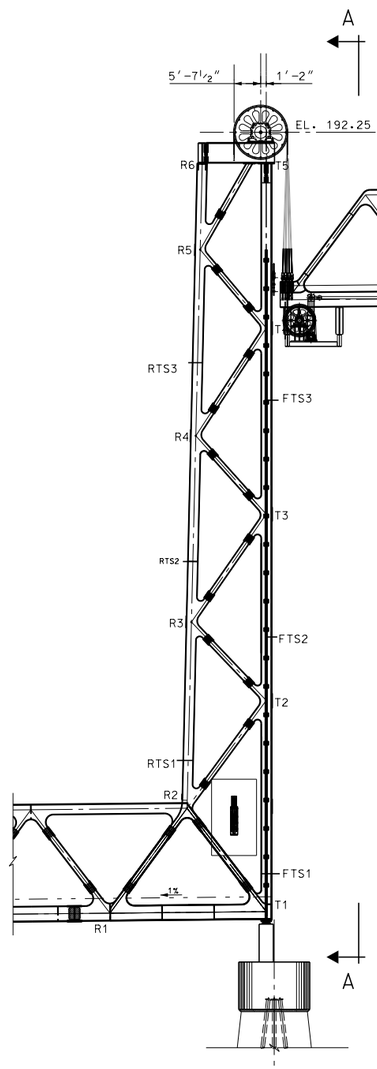

SOUTH TOWER EAST ELEVATION

(LIFT SPAN FULLY OPEN POSITION SHOWN)

1/16" = 1'-0"

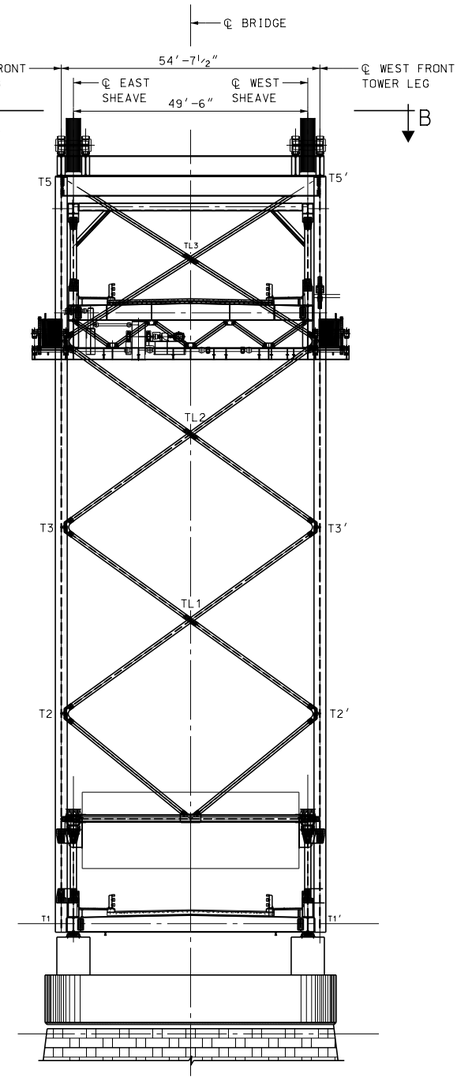

VIEW A-A

1/16" = 1'-0"

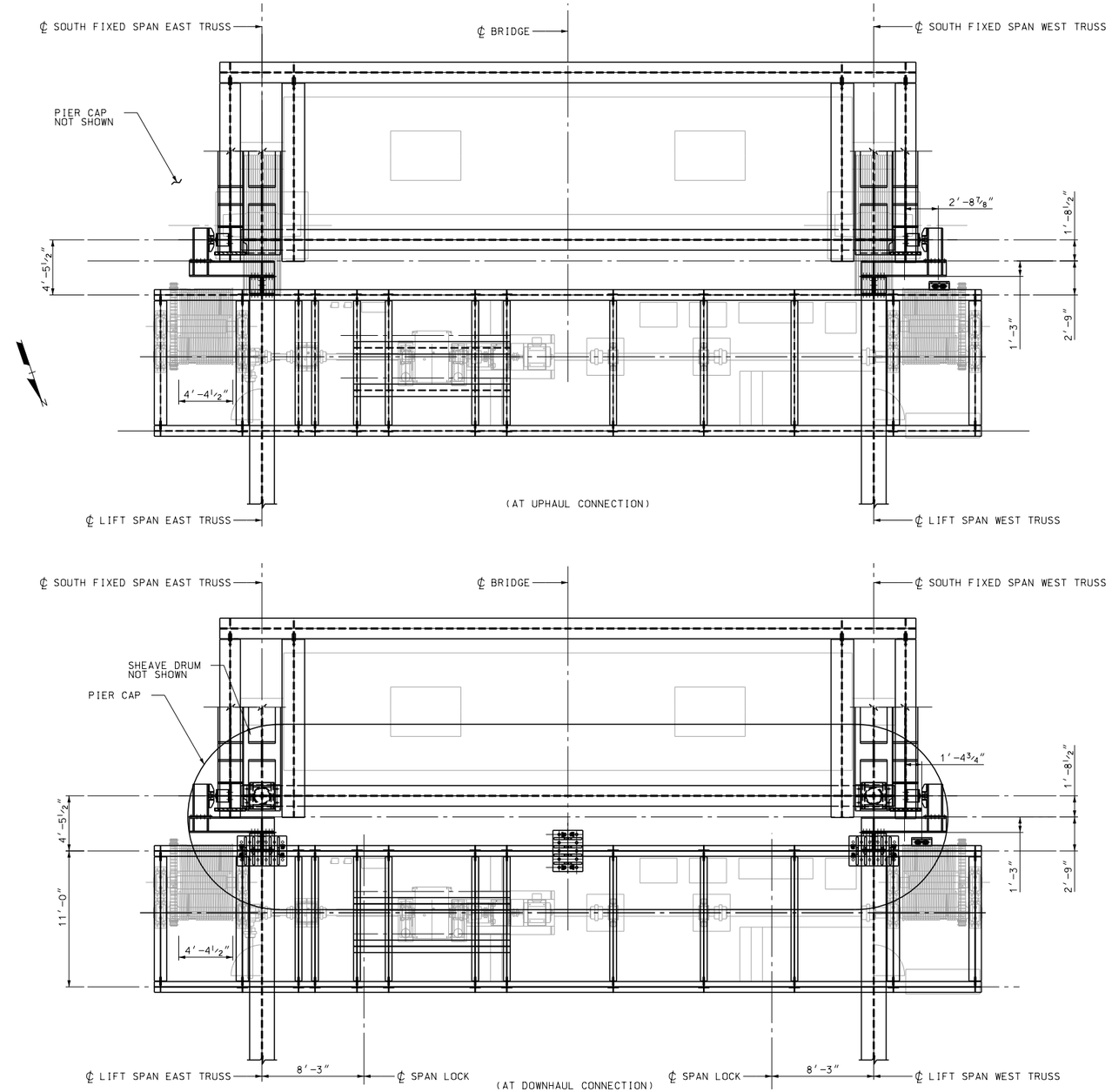

VIEW B-B

3/16" = 1'-0"

NOTES:

1. ALL WORK ASSOCIATED WITH WIRE ROPE ASSEMBLIES AND ATTACHMENT SHALL BE INCLUDED UNDER ITEM XXXX.XXX.
2. FOR BRIDGE OPEN DIAGRAM, SEE BRIDGE SHEET B1A.
3. FOR LOCATION OF OPERATING ROPE CONNECTIONS, SEE BRIDGE SHEET B39A.

80% Submission
January 10, 2012

ARCHER WESTERN CONTRACTORS

HNTB
HNTB Corporation
The HNTB Companies
Engineers Architects Planners

SUBDIRECTORY	.DGN LOCATOR	SHEET SCALE
	$FILENAME$	AS NOTED

STATE OF NEW HAMPSHIRE
DEPARTMENT OF TRANSPORTATION * BUREAU OF BRIDGE DESIGN

TOWN PORTSMOUTH, NH. - KITTERY, ME. BRIDGE NO. 247 \ 084 STATE PROJECT 13678F

LOCATION U.S. ROUTE 1 OVER PISCATAQUA RIVER

OPERATING ROPE LAYOUT

REVISIONS AFTER PROPOSAL		BY	DATE		BY	DATE
	DESIGNED	GT	09/11	CHECKED	CSE	09/11
	DRAWN	PRE	09/11	CHECKED	JN	09/11
	QUANTITIES	XX	XX/XX	CHECKED	XX	XX/XX
	ISSUE DATE		FEDERAL PROJECT NO.		SHEET NO.	
	REV. DATE					

BRIDGE SHEET B39 OF

FILE NUMBER 107-1-1

TOTAL SHEETS

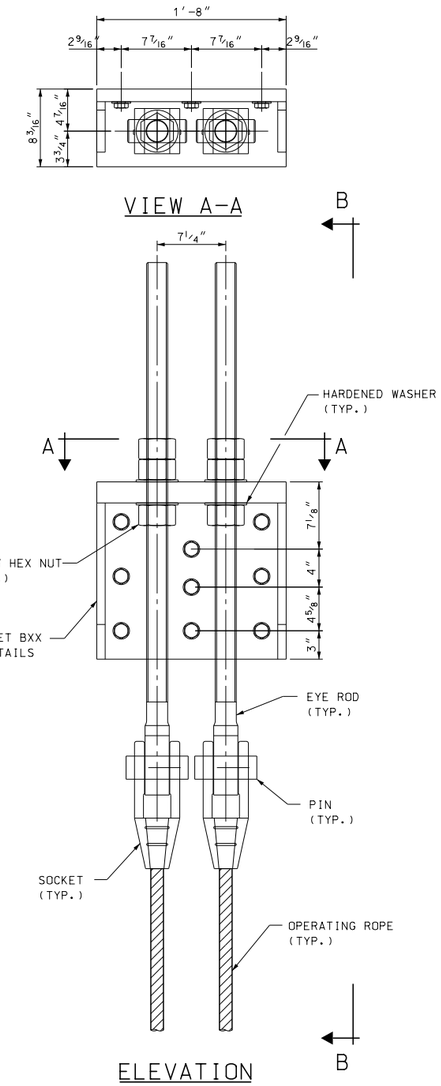

UPHAUL ROPE CONNECTION

1 1/2" = 1'-0"

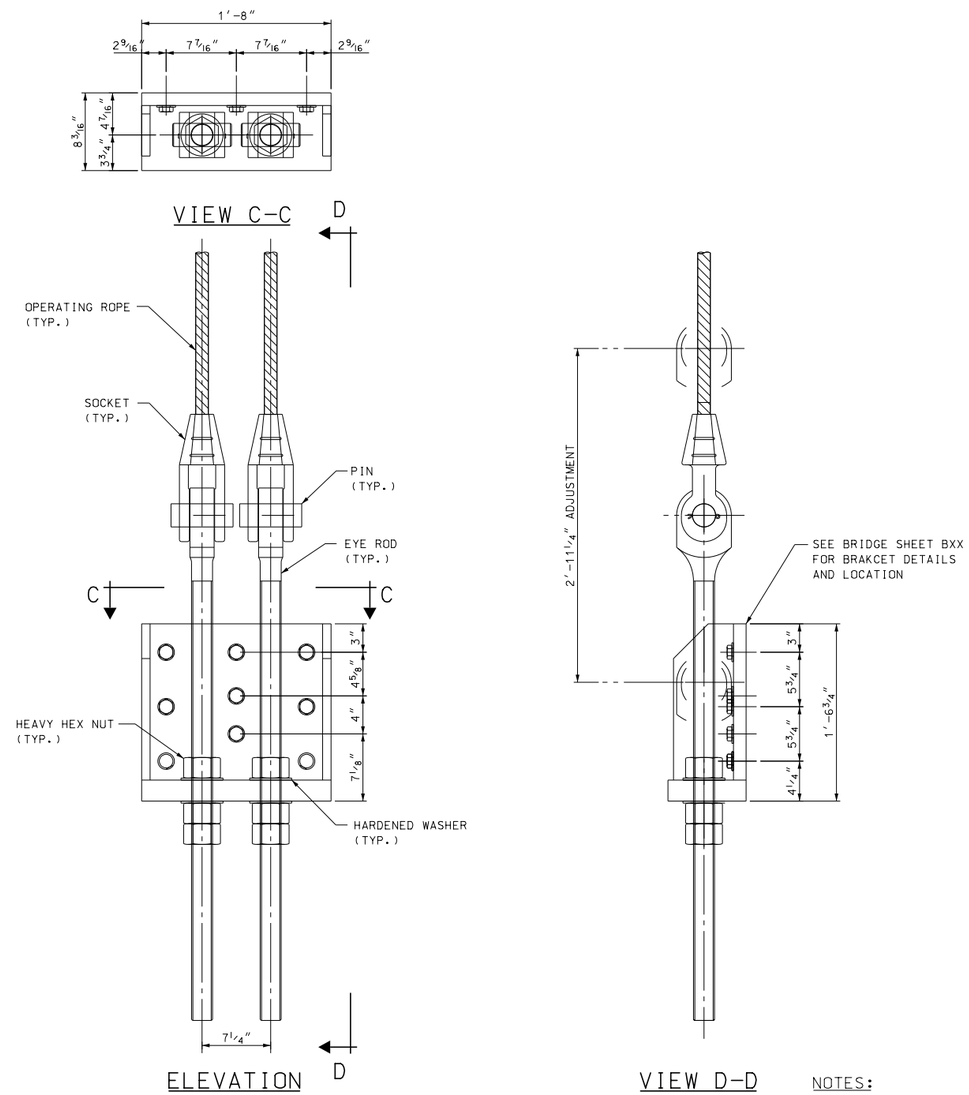

DOWNHAUL ROPE CONNECTION

1 1/2" = 1'-0"

NOTES:

1. ALL WORK ASSOCIATED WITH WIRE ROPE ASSEMBLIES AND ATTACHMENT SHALL BE INCLUDED UNDER ITEM XXXX.XXX.

2. ALL STRUCTURAL STEEL SHALL BE AASHTO M270 GRADE 50 UNLESS NOTED OTHERWISE.

3. ALL BOLTS SHALL BE 7/8" DIA. HIGH STRENGTH ASTM A325 AND SHALL BE GALVANIZED PER THE REQUIREMENTS OF ASTM A153. NUTS AND WASHERS SHALL BE A563 AND F436 RESPECTIVELY, AND SHALL BE GALVANIZED PER REQUIREMENTS OF ASTM A153. ALL HOLES FOR 7/8" DIA. BOLTS SHALL BE 15/16" DIA. UNLESS NOTED OTHERWISE.

80% Submission
January 10, 2012

ARCHER WESTERN CONTRACTORS

HNTB
HNTB Corporation
The HNTB Companies
Engineers Architects Planners

STATE OF NEW HAMPSHIRE
DEPARTMENT OF TRANSPORTATION * BUREAU OF BRIDGE DESIGN

TOWN PORTSMOUTH, NH. - KITTERY, ME. BRIDGE NO. 247 \ 084 STATE PROJECT 13678F

LOCATION U.S. ROUTE 1 OVER PISCATAQUA RIVER

OPERATING ROPE AND CONNECTION DETAILS

BRIDGE SHEET B39A OF

FILE NUMBER 107-1-1

REVISIONS AFTER PROPOSAL		BY	DATE		BY	DATE
	DESIGNED	GT	09/11	CHECKED	CSE	09/11
	DRAWN	PRE	09/11	CHECKED	JN	09/11
	QUANTITIES	XX	XX/XX	CHECKED	XX	XX/XX
	ISSUE DATE			FEDERAL PROJECT NO.	SHEET NO.	TOTAL SHEETS
	REV. DATE					

SUBDIRECTORY	.DGN LOCATOR	SHEET SCALE
	$FILENAME$	AS NOTED

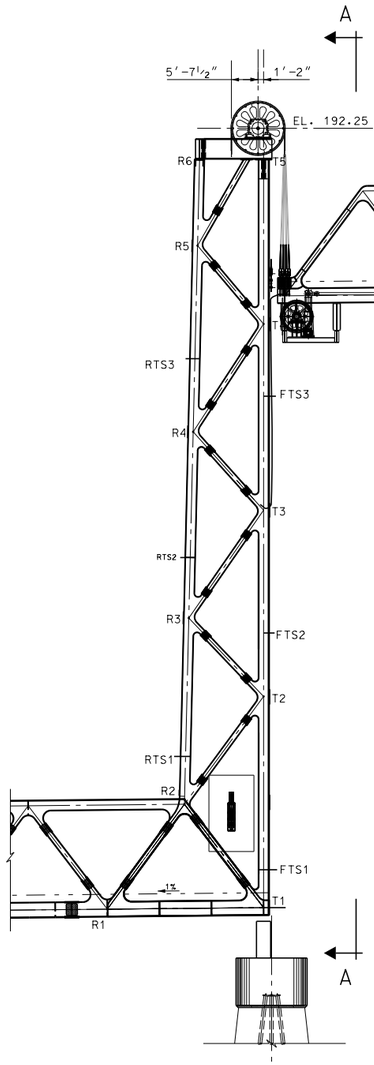

SOUTH TOWER EAST ELEVATION

(LIFT SPAN FULLY OPEN POSITION SHOWN)

1/16″ = 1′-0″

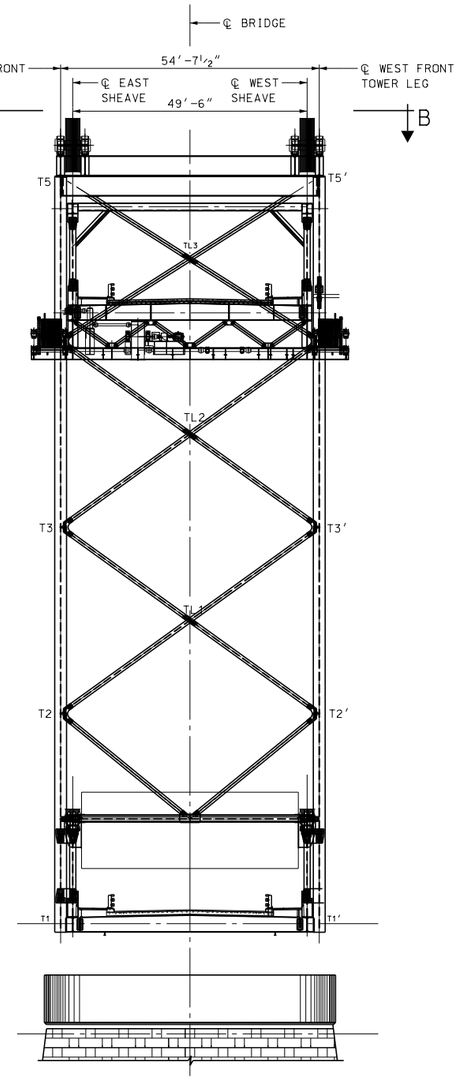

VIEW A-A

1/16″ = 1′-0″

NOTES:

1. ALL WORK ASSOCIATED WITH THE DROOP CABLE CHASE SHALL BE INCLUDED UNDER ITEM XXXX.XXX.

2. ALL STRUCTURAL STEEL SHALL BE AASHTO M270 GRADE 50 UNLESS NOTED OTHERWISE.

3. ALL BOLTS SHALL BE 7/8″ DIA. HIGH STRENGTH ASTM A325 AND SHALL BE GALVANIZED PER THE REQUIREMENTS OF ASTM A153. NUTS AND WASHERS SHALL BE A563 AND F43G RESPECTIVELY, AND SHALL BE GALVANIZED PER REQUIREMENTS OF ASTM A153. ALL HOLES FOR 7/8″ DIA. BOLTS SHALL BE 15/16″ DIA. UNLESS NOTED OTHERWISE.

80% Submission
January 10, 2012

ARCHER WESTERN CONTRACTORS

HNTB
HNTB Corporation
The HNTB Companies
Engineers Architects Planners

SUBDIRECTORY	.DGN LOCATOR	SHEET SCALE
	$FILENAME$	AS NOTED

STATE OF NEW HAMPSHIRE
DEPARTMENT OF TRANSPORTATION * BUREAU OF BRIDGE DESIGN

TOWN PORTSMOUTH, NH. - KITTERY, ME. BRIDGE NO. 247 \ 084 STATE PROJECT 13678F

LOCATION U.S. ROUTE 1 OVER PISCATAQUA RIVER

DROOP CABLE CHASE

BRIDGE SHEET B39B OF

FILE NUMBER 107-1-1

REVISIONS AFTER PROPOSAL		BY	DATE		BY	DATE
	DESIGNED	GT	09/11	CHECKED	CSE	09/11
	DRAWN	PRE	09/11	CHECKED	JN	09/11
	QUANTITIES	XX	XX/XX	CHECKED	XX	XX/XX

ISSUE DATE	FEDERAL PROJECT NO.	SHEET NO.	TOTAL SHEETS
REV. DATE			

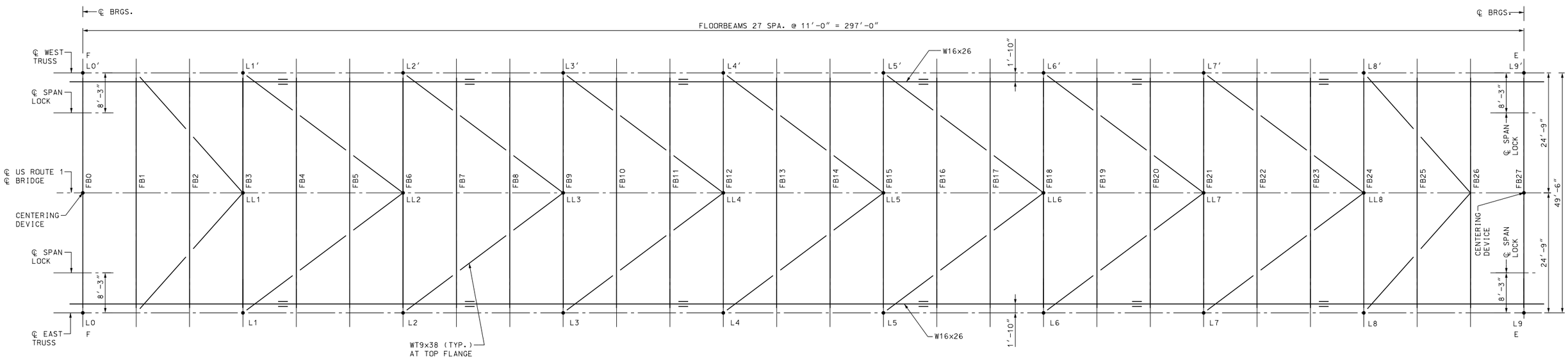

LIFT TRUSS SPAN - BOTTOM CHORD FRAMING PLAN

1" = 10'-0"

LEGEND:

L (n)	INDICATES BOTTOM CHORD PANEL POINT	E	INDICATES EXPANSION BEARING
FB (N)	INDICATES FLOORBEAMS	F	INDICATES FIXED BEARING
LL (n)	INDICATES LOWER LATERAL PANEL POINT		

NOTES:

1. FOR GENERAL STRUCTURAL NOTES, SEE BRIDGE SHEETS G3 AND G4.
2. FOR LIFT SPAN TRUSS GEOMETRY, SEE BRIDGE SHEET B42.
3. ALL FRAME DIMENSIONS ARE MEASURED HORIZONTALLY ALONG CENTERLINE OF TRUSS GIRDER.
4. FOR TYPICAL LIFT SPAN CROSS SECTIONS, SEE BRIDGE SHEET B41.
5. PANEL POINT NUMBERS WITH A PRIME SYMBOL DESIGNATE PANELS LOCATED ON THE WEST FASCIA OF THE STRUCTURE.
6. ALL STRUCTURAL STEEL SHALL BE AASHTO M270 GRADE 50 UNLESS NOTED OTHERWISE.

80% Submission
January 10, 2012

ARCHER WESTERN CONTRACTORS

HNTB
HNTB Corporation
The HNTB Companies
Engineers Architects Planners

SUBDIRECTORY	.DGN LOCATOR	SHEET SCALE
	$FILENAME$	1" = 10'-0"

STATE OF NEW HAMPSHIRE
DEPARTMENT OF TRANSPORTATION * BUREAU OF BRIDGE DESIGN

TOWN PORTSMOUTH, NH. - KITTERY, ME. BRIDGE NO. 247 \ 084 STATE PROJECT 13678F

LOCATION U.S. ROUTE 1 OVER PISCATAQUA RIVER

LIFT SPAN - FRAMING PLAN

REVISIONS AFTER PROPOSAL		BY	DATE		BY	DATE
	DESIGNED	CSE	09/11	CHECKED	TPZ	09/11
	DRAWN	PRE	09/11	CHECKED	GT	09/11
	QUANTITIES	XX	XX/XX	CHECKED	XX	XX/XX
	ISSUE DATE			FEDERAL PROJECT NO.	SHEET NO.	TOTAL SHEETS
	REV. DATE					

BRIDGE SHEET B40 OF

FILE NUMBER 107-1-1

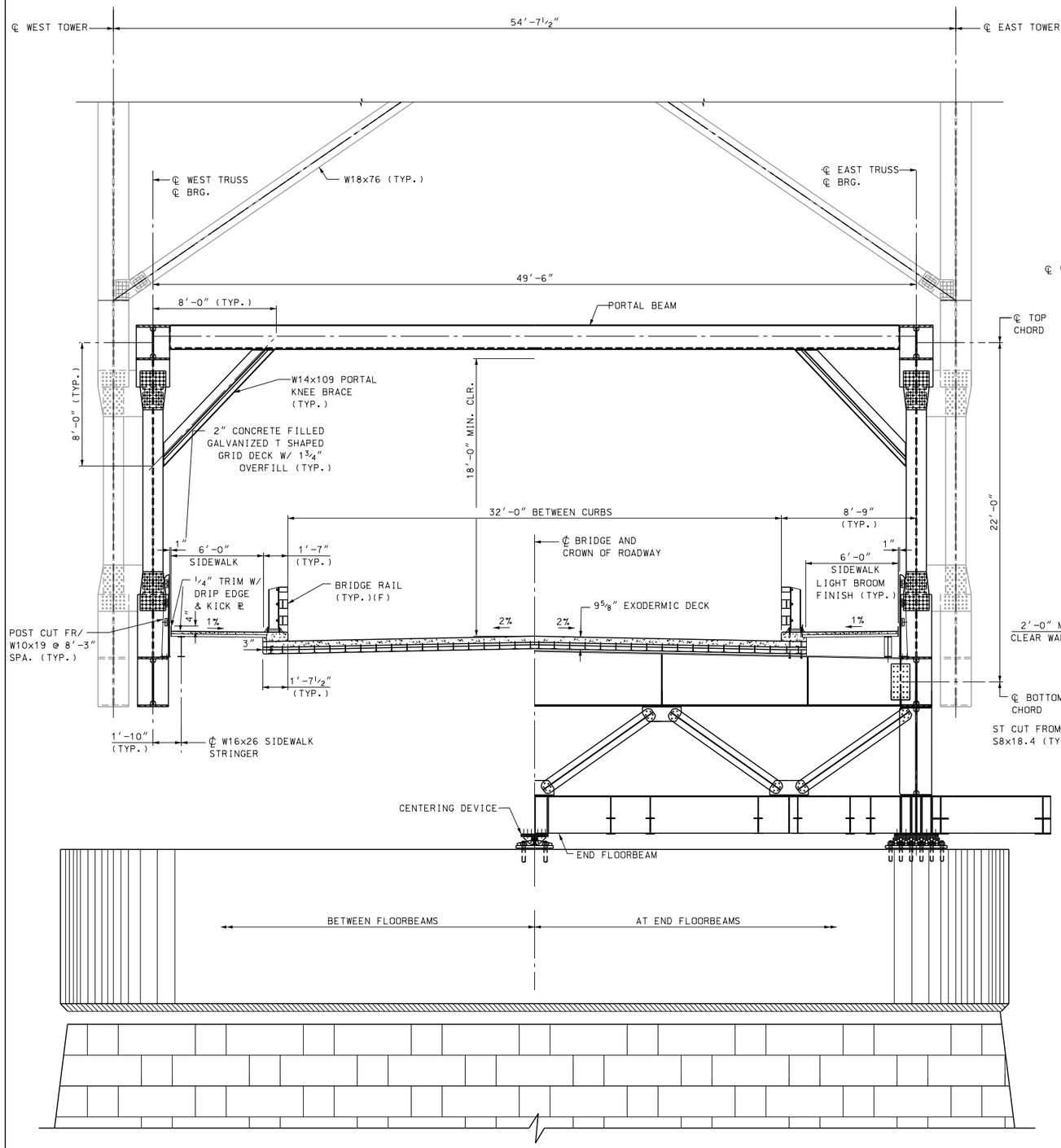

LIFT SPAN CROSS SECTION AT SOUTH TOWER

(LOOKING NORTH)

¼″ = 1′-0″

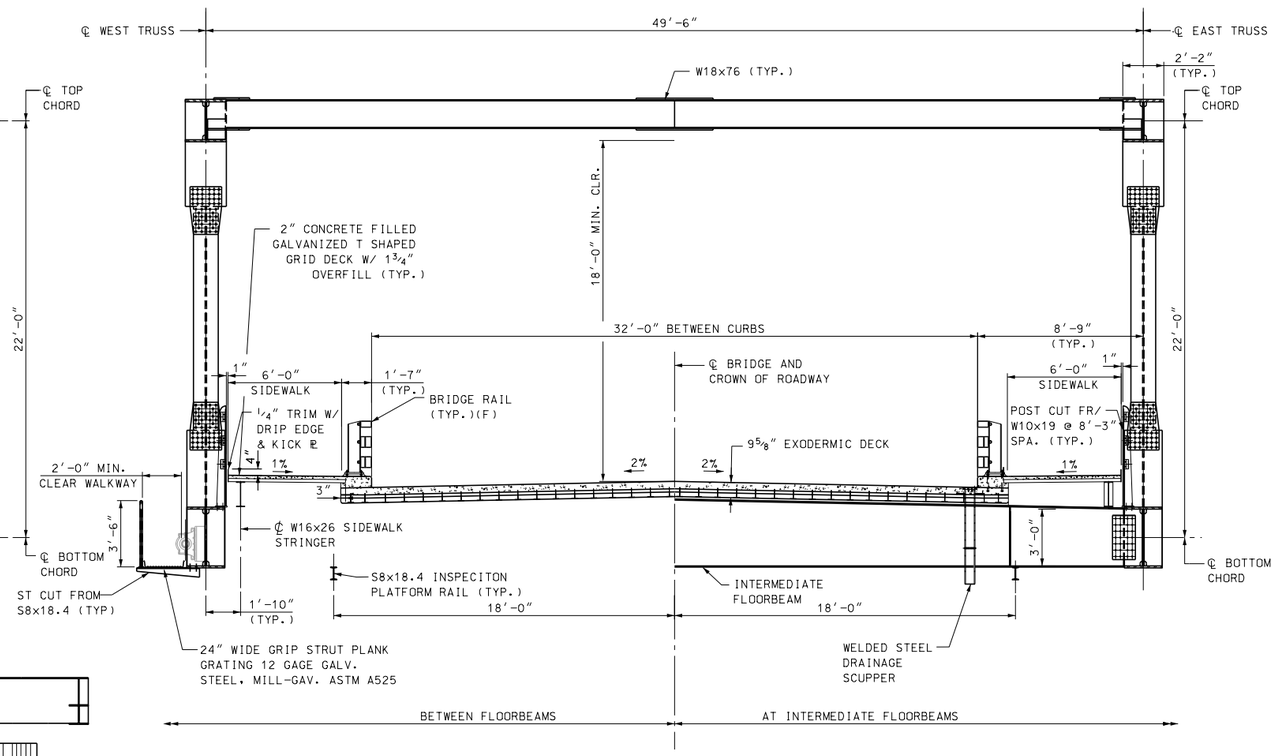

TYPICAL LIFT TRUSS SPAN CROSS SECTION

(LOOKING NORTH)

¼″ = 1′-0″

NOTES:

1. FOR LIFT SPAN FRAMING PLAN, SEE BRIDGE SHEET B40.
2. ALL BOLTS SHALL BE ⅞″ DIA. HIGH STRENGTH ASTM A325 AND SHALL BE GALVANIZED PER THE REQUIREMENTS OF ASTM A153. NUTS AND WASHERS SHALL BE A563 AND F436 RESPECTIVELY, AND SHALL BE GALVANIZED PER REQUIREMENTS OF ASTM A153
3. FOR ROADWAY GRATING DETAILS, SEE BRIDGE SHEET B50.

80% Submission
January 10, 2012

ARCHER WESTERN CONTRACTORS

HNTB Corporation
The HNTB Companies
Engineers Architects Planners

STATE OF NEW HAMPSHIRE
DEPARTMENT OF TRANSPORTATION * BUREAU OF BRIDGE DESIGN

TOWN PORTSMOUTH, NH. - KITTERY, ME. BRIDGE NO. 247 \ 084 STATE PROJECT 13678F

LOCATION U.S. ROUTE 1 OVER PISCATAQUA RIVER

LIFT SPAN - TYPICAL CROSS SECTIONS

BRIDGE SHEET B41 OF

FILE NUMBER 107-1-1

REVISIONS AFTER PROPOSAL	BY	DATE		BY	DATE
DESIGNED	CSE	09/11	CHECKED	TPZ	09/11
DRAWN	PRE	09/11	CHECKED	GT	09/11
QUANTITIES	XX	XX/XX	CHECKED	XX	XX/XX

SUBDIRECTORY	.DGN LOCATOR	SHEET SCALE	ISSUE DATE	FEDERAL PROJECT NO.	SHEET NO.	TOTAL SHEETS
	$FILENAME$	1/4" = 1'-0"	REV. DATE			

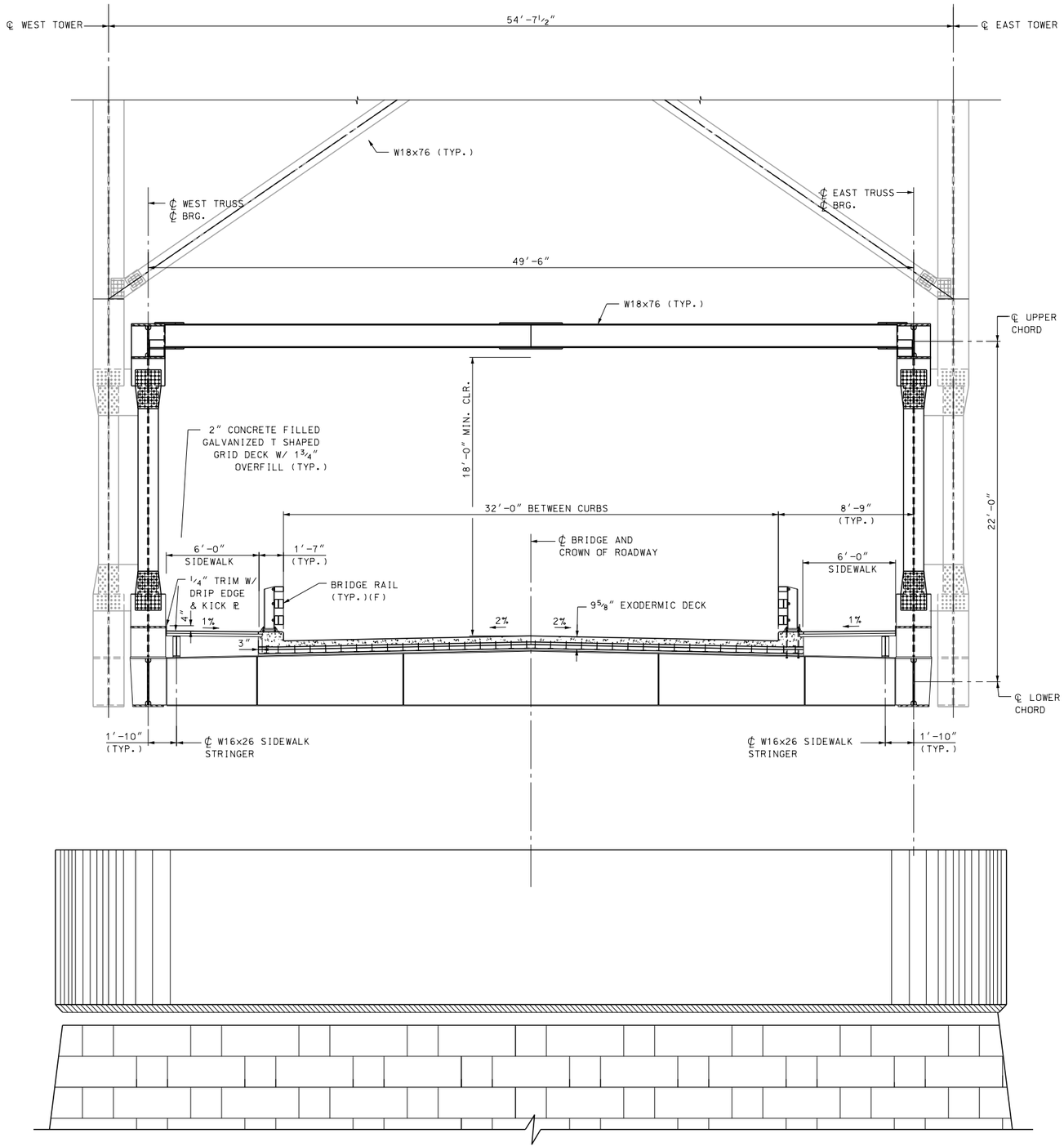

LIFT SPAN AT ROPE ANCHORAGE

¼″ = 1′-0″

NOTES:

1. FOR LIFT SPAN FRAMING PLAN, SEE BRIDGE SHEET B40.
2. ALL BOLTS SHALL BE ⅞″ DIA. HIGH STRENGTH ASTM A325 AND SHALL BE GALVANIZED PER THE REQUIREMENTS OF ASTM A153. NUTS AND WASHERS SHALL BE A563 AND F436 RESPECTIVELY, AND SHALL BE GALVANIZED PER REQUIREMENTS OF ASTM A153
3. FOR ROADWAY GRATING DETAILS, SEE BRIDGE SHEET B50.

80% Submission
January 10, 2012

ARCHER WESTERN CONTRACTORS

HNTB
HNTB Corporation
The HNTB Companies
Engineers Architects Planners

STATE OF NEW HAMPSHIRE
DEPARTMENT OF TRANSPORTATION * BUREAU OF BRIDGE DESIGN

TOWN PORTSMOUTH, NH. - KITTERY, ME. BRIDGE NO. 247 \ 084 STATE PROJECT 13678F

LOCATION U.S. ROUTE 1 OVER PISCATAQUA RIVER

LIFT SPAN AT ROPE ANCHORAGE

BRIDGE SHEET B41A OF

REVISIONS AFTER PROPOSAL	BY	DATE		BY	DATE
DESIGNED	CSE	09/11	CHECKED	TPZ	09/11
DRAWN	PRE	09/11	CHECKED	GT	09/11
QUANTITIES	XX	XX/XX	CHECKED	XX	XX/XX

ISSUE DATE
REV. DATE
FEDERAL PROJECT NO.
SHEET NO.
TOTAL SHEETS

FILE NUMBER 107-1-1

SUBDIRECTORY	.DGN LOCATOR	SHEET SCALE
	$FILENAME$	1/4" = 1'-0"

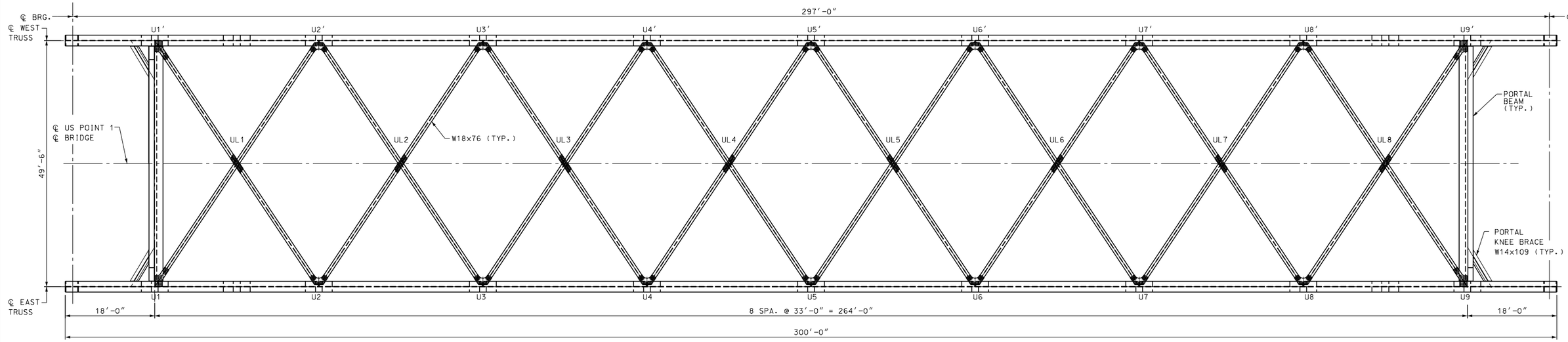

UPPER LATERAL BRACING PLAN

1″ = 10′-0″

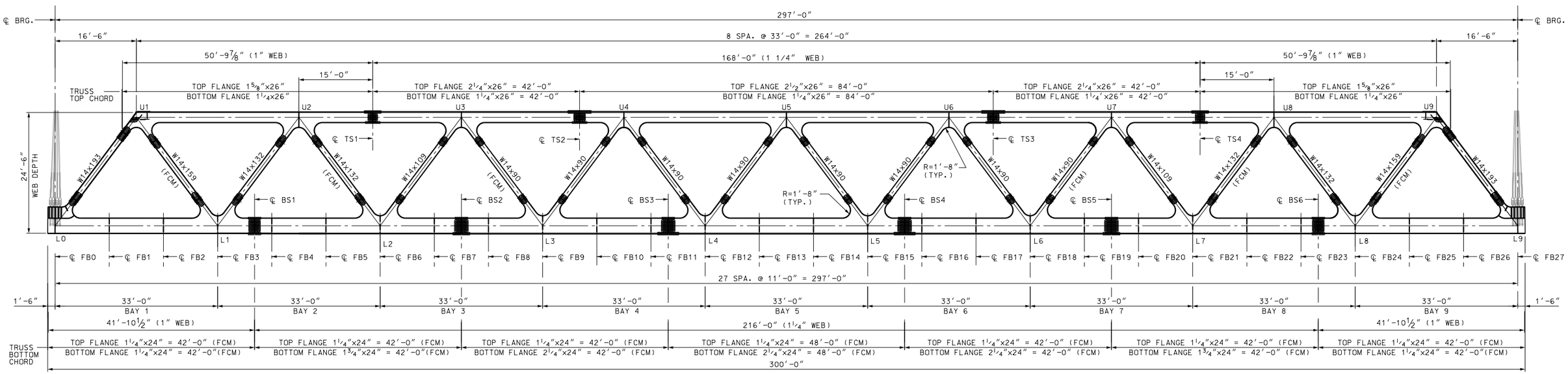

TYPICAL TRUSS ELEVATION

1″ = 10′-0″

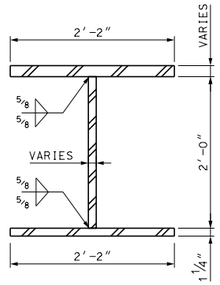

TRUSS TOP CHORD

1″= 1′-0″

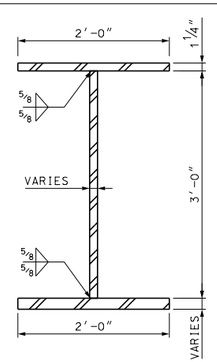

TRUSS BOTTOM CHORD

1″= 1′-0″

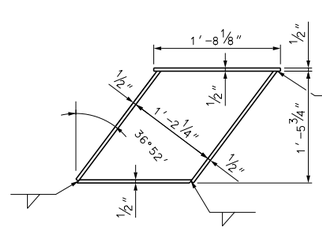

PORTAL BRACE

1″= 1′-0″

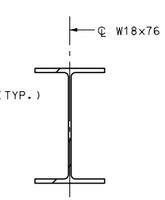

UPPER LATERAL DIAGONAL

1″= 1′-0″

LEGEND:

L(n)	INDICATES BOTTOM CHORD PANEL POINT
U(n)	INDICATES TOP CHORD PANEL POINT
UL(n)	INDICATES UPPER LATERAL PANEL POINT
TS(n)	INDICATES TOP CHORD SPLICE LOCATION
BS(n)	INDICATES BOTTOM CHORD SPLICE LOCATION
FCM	INDICATES FRACTURE CRITICAL MEMBER
FB(n)	INDICATES FLOORBEAM NUMBER

NOTES:

1. ALL STRUCTURAL STEEL SHALL BE AASHTO M270 GRADE 50 UNLESS NOTED OTHERWISE.
2. PANEL POINT NUMBERS WITH A PRIME SYMBOL DESIGNATE PANELS LOCATED ON THE WEST FASCIA OF THE STRUCTURE.
3. FOR TRUSS CHORD SPLICE DETAILS, SEE BRIDGE SHEETS B47 AND B47A.
4. FOR PORTAL BEAM AND KNEE BRACE DETAILS, SEE BRIDGE SHEET B1GE.

80% Submission
January 10, 2012

ARCHER WESTERN CONTRACTORS

HNTB
HNTB Corporation
The HNTB Companies
Engineers Architects Planners

SUBDIRECTORY	.DGN LOCATOR	SHEET SCALE
	$FILENAME$	AS NOTED

STATE OF NEW HAMPSHIRE
DEPARTMENT OF TRANSPORTATION * BUREAU OF BRIDGE DESIGN

TOWN PORTSMOUTH, NH. - KITTERY, ME. BRIDGE NO. 247 \ 084 STATE PROJECT 13678F

LOCATION U.S. ROUTE 1 OVER PISCATAQUA RIVER

LIFT SPAN TRUSS GEOMETRY 1 OF 2

REVISIONS AFTER PROPOSAL		BY	DATE		BY	DATE
	DESIGNED	CSE	09/11	CHECKED	TPZ	09/11
	DRAWN	SPL	XX/XX	CHECKED	GT	09/11
	QUANTITIES	XX	XX/XX	CHECKED	XX	XX/XX
	ISSUE DATE		FEDERAL PROJECT NO.		SHEET NO.	
	REV. DATE					

BRIDGE SHEET B42 OF
FILE NUMBER 107-1-1
TOTAL SHEETS

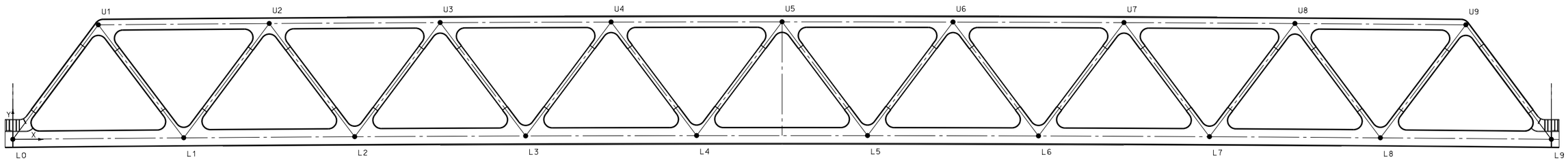

LIFT TRUSS WORKING POINTS

ASSUME ORIGIN (X,Y) = (0.00,0.000) CORRESPONDS TO L0
1" = 10'-0"

LOWER CHORD WORKING POINTS

POINT	X	Y
L0	0.000	0.000
L1	33.000	0.290
L2	66.000	0.508
L3	99.000	0.653
L4	132.000	0.726
L5	165.000	0.726
L6	198.000	0.653
L7	231.000	0.508
L8	264.000	0.290
L9	297.000	0.000

UPPER CHORD WORKING POINTS

POINT	X	Y
U1	16.306	22.153
U2	49.355	22.408
U3	82.403	22.590
U4	115.452	22.699
U5	148.500	22.735
U6	181.548	22.699
U7	214.597	22.590
U8	247.645	22.408
U9	280.694	22.153

LEGEND:

L(n) INDICATES BOTTOM CHORD PANEL POINT
U(n) INDICATES TOP CHORD PANEL POINT

NOTES:

1. ALL STRUCTURAL STEEL SHALL BE AASHTO M270 GRADE 50 UNLESS NOTED OTHERWISE.
2. PANEL POINT COORDINATE VALUES DO NOT INCLUDE CAMBER
3. ALL WORKING POINT TABLE VALUES IN FT.
4. PANEL POINT NUMBERS WITH A PRIME SYMBOL DESIGNATE PANELS LOCATED ON THE WEST FASCIA OF THE STRUCTURE.

80% Submission
January 10, 2012

ARCHER WESTERN CONTRACTORS

HNTB
HNTB Corporation
The HNTB Companies
Engineers Architects Planners

STATE OF NEW HAMPSHIRE
DEPARTMENT OF TRANSPORTATION * BUREAU OF BRIDGE DESIGN

TOWN PORTSMOUTH, NH. - KITTERY, ME. BRIDGE NO. 247\084 STATE PROJECT 13678F
LOCATION U.S. ROUTE 1 OVER PISCATAQUA RIVER

LIFT SPAN TRUSS GEOMETRY 2 OF 2

BRIDGE SHEET B43 OF

FILE NUMBER 107-1-1

REVISIONS AFTER PROPOSAL		BY	DATE		BY	DATE
	DESIGNED	CSE	09/11	CHECKED	TPZ	09/11
	DRAWN	SPL	XX/XX	CHECKED	GT	09/11
	QUANTITIES	XX	XX/XX	CHECKED	XX	XX/XX
	ISSUE DATE			FEDERAL PROJECT NO.	SHEET NO.	TOTAL SHEETS
	REV. DATE					

SUBDIRECTORY	.DGN LOCATOR	SHEET SCALE
	$FILENAME$	AS NOTED

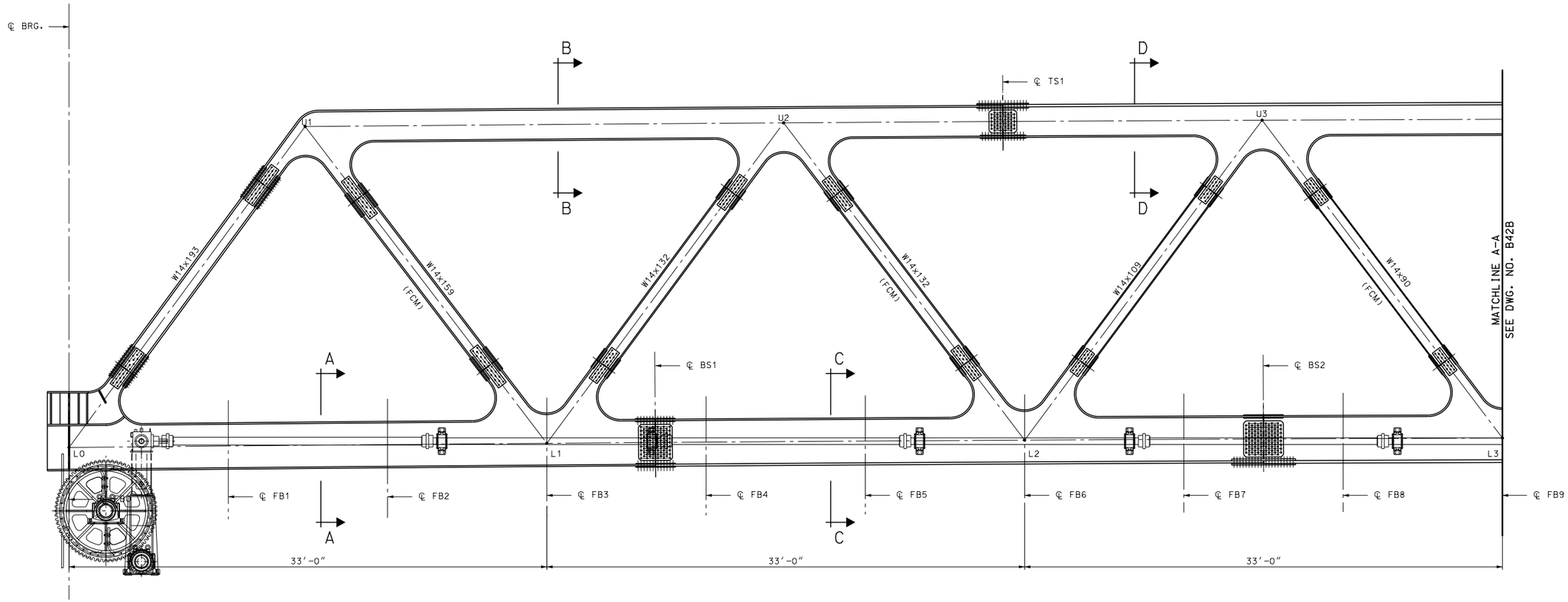

MODIFIED TRUSS SPAN ELEVATION: L0 TO L3

1/4" = 1'-0"

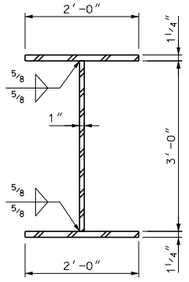

SECTION A-A

3/4" = 1'-0"

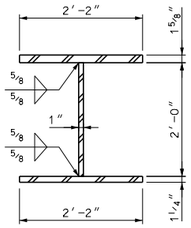

SECTION B-B

3/4" = 1'-0"

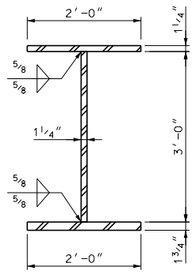

SECTION C-C

3/4" = 1'-0"

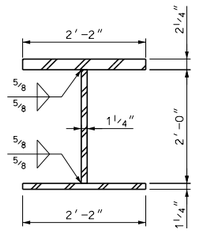

SECTION D-D

3/4" = 1'-0"

LEGEND:

L(n)	INDICATES BOTTOM CHORD PANEL POINT
U(n)	INDICATES TOP CHORD PANEL POINT
TS(n)	INDICATES TOP CHORD SPLICE LOCATION
BS(n)	INDICATES BOTTOM CHORD SPLICE LOCATION
FCM	INDICATES FRACTURE CRITICAL MEMBER
FB(n)	INDICATES FLOORBEAM NUMBER

NOTES:

1. ALL STRUCTURAL STEEL SHALL BE AASHTO M270 GRADE 50 UNLESS NOTED OTHERWISE.
2. FOR LIFT SPAN FRAMING PLANS, SEE BRIDGE SHEET B40.
3. FOR TRUSS CHORD SPLICE DETAILS, SEE BRIDGE SHEETS B47 AND B47A.

80% Submission
January 10, 2012

ARCHER WESTERN CONTRACTORS

HNTB
HNTB Corporation
The HNTB Companies
Engineers Architects Planners

SUBDIRECTORY	.DGN LOCATOR	SHEET SCALE
	$FILENAME$	AS NOTED

STATE OF NEW HAMPSHIRE
DEPARTMENT OF TRANSPORTATION * BUREAU OF BRIDGE DESIGN

TOWN PORTSMOUTH, NH. - KITTERY, ME. BRIDGE NO. 247 \ 084 STATE PROJECT 13678F

LOCATION U.S. ROUTE 1 OVER PISCATAQUA RIVER

LIFT SPAN - TRUSS ELEVATION 1 OF 3

BRIDGE SHEET: B43A OF

FILE NUMBER: 107-1-1

REVISIONS AFTER PROPOSAL		BY	DATE		BY	DATE
	DESIGNED	CSE	09/11	CHECKED	TPZ	09/11
	DRAWN	SPL	XX/XX	CHECKED	GT	09/11
	QUANTITIES	XX	XX/XX	CHECKED	XX	XX/XX
	ISSUE DATE		FEDERAL PROJECT NO.		SHEET NO.	TOTAL SHEETS
	REV. DATE					

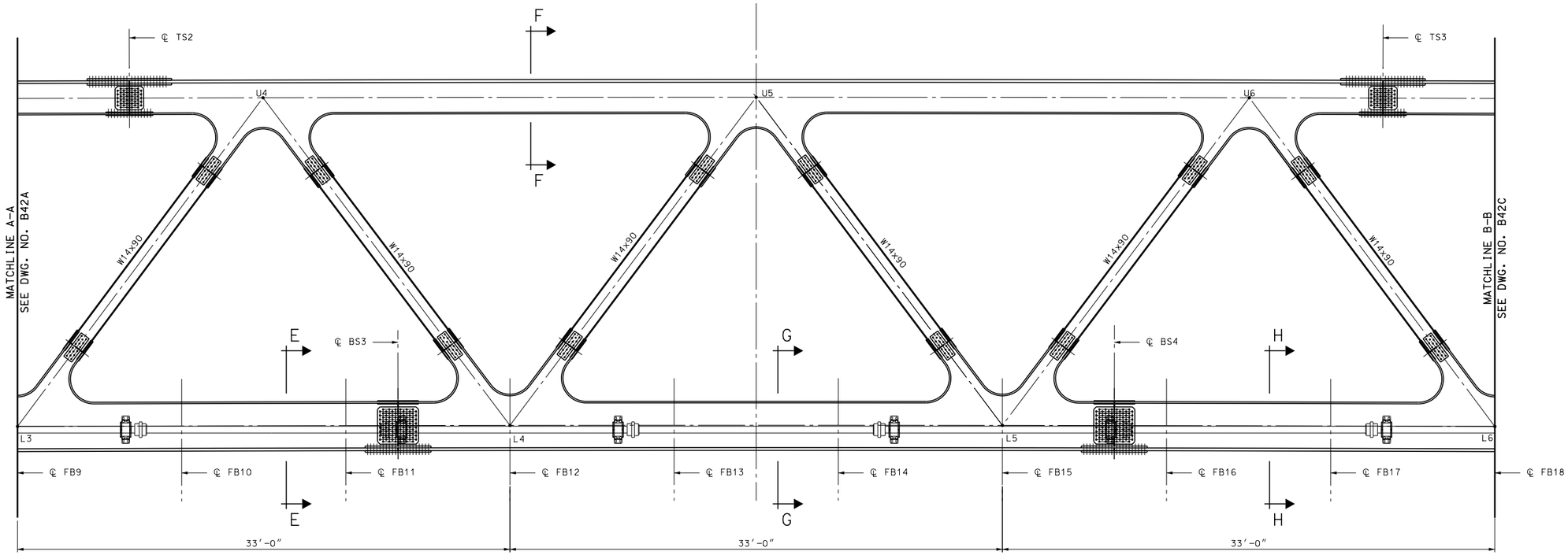

MODIFIED TRUSS SPAN ELEVATION: L3 TO L6

1/4" = 1'-0"

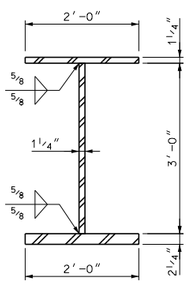

SECTION E-E

3/4" = 1'-0"

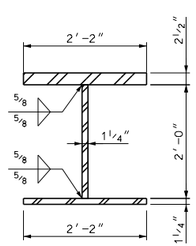

SECTION F-F

3/4" = 1'-0"

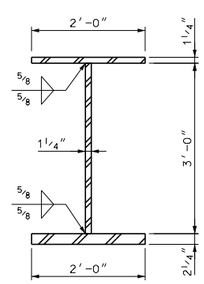

SECTION G-G

3/4" = 1'-0"

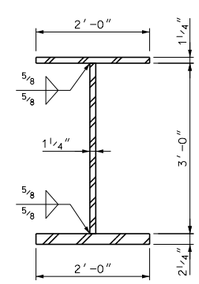

SECTION H-H

3/4" = 1'-0"

LEGEND:

L(n)	INDICATES BOTTOM CHORD PANEL POINT
U(n)	INDICATES TOP CHORD PANEL POINT
TS(n)	INDICATES TOP CHORD SPLICE LOCATION
BS(n)	INDICATES BOTTOM CHORD SPLICE LOCATION
FCM	INDICATES FRACTURE CRITICAL MEMBER
FB(n)	INDICATES FLOORBEAM NUMBER

NOTES:

1. ALL STRUCTURAL STEEL SHALL BE AASHTO M270 GRADE 50 UNLESS NOTED OTHERWISE.
2. FOR LIFT SPAN FRAMING PLANS, SEE BRIDGE SHEET B40.
3. FOR TRUSS CHORD SPLICE DETAILS, SEE BRIDGE SHEETS B47 AND B47A.

80% Submission
January 10, 2012

ARCHER WESTERN CONTRACTORS

HNTB
HNTB Corporation
The HNTB Companies
Engineers Architects Planners

SUBDIRECTORY	.DGN LOCATOR	SHEET SCALE
	$FILENAME$	AS NOTED

STATE OF NEW HAMPSHIRE
DEPARTMENT OF TRANSPORTATION * BUREAU OF BRIDGE DESIGN

TOWN PORTSMOUTH, NH. - KITTERY, ME. BRIDGE NO. 247 \ 084 STATE PROJECT 13678F

LOCATION U.S. ROUTE 1 OVER PISCATAQUA RIVER

LIFT SPAN - TRUSS ELEVATION 2 OF 3

BRIDGE SHEET: B43B OF

REVISIONS AFTER PROPOSAL		BY	DATE		BY	DATE
	DESIGNED	CSE	09/11	CHECKED	TPZ	09/11
	DRAWN	SPL	XX/XX	CHECKED	GT	09/11
	QUANTITIES	XX	XX/XX	CHECKED	XX	XX/XX
	ISSUE DATE		FEDERAL PROJECT NO.		SHEET NO.	TOTAL SHEETS
	REV. DATE					

FILE NUMBER: 107-1-1

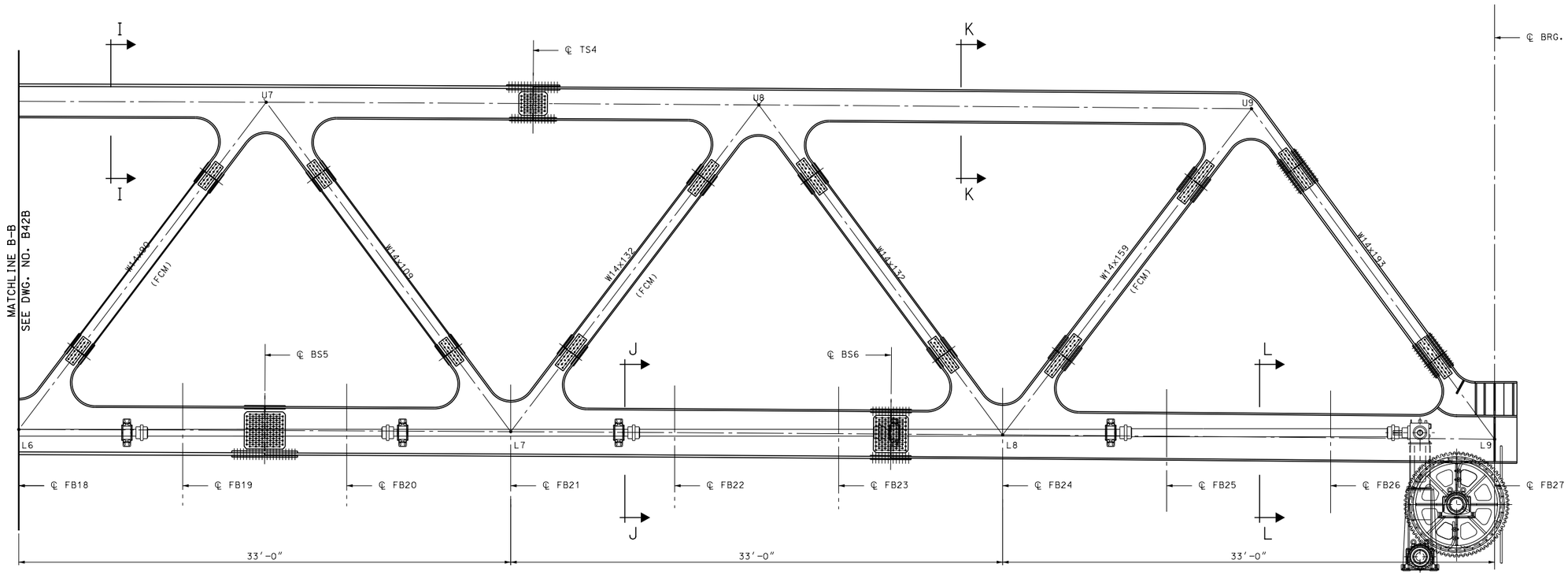

MODIFIED TRUSS SPAN ELEVATION: L6 TO L9

1/4" = 1'-0"

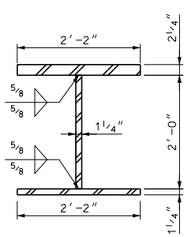

SECTION I-I

3/4" = 1'-0"

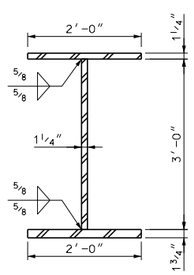

SECTION J-J

3/4" = 1'-0"

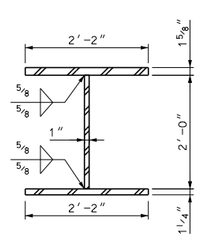

SECTION K-K

3/4" = 1'-0"

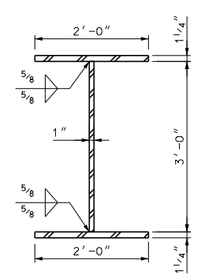

SECTION L-L

3/4" = 1'-0"

LEGEND:

L(n)	INDICATES BOTTOM CHORD PANEL POINT
U(n)	INDICATES TOP CHORD PANEL POINT
TS(n)	INDICATES TOP CHORD SPLICE LOCATION
BS(n)	INDICATES BOTTOM CHORD SPLICE LOCATION
FCM	INDICATES FRACTURE CRITICAL MEMBER
FB(n)	INDICATES FLOORBEAM NUMBER

NOTES:

1. ALL STRUCTURAL STEEL SHALL BE AASHTO M270 GRADE 50 UNLESS NOTED OTHERWISE.
2. FOR LIFT SPAN FRAMING PLANS, SEE BRIDGE SHEET B40.
3. FOR TRUSS CHORD SPLICE DETAILS, SEE BRIDGE SHEETS B47 AND B47A.

80% Submission
January 10, 2012

ARCHER WESTERN CONTRACTORS

HNTB Corporation
The HNTB Companies
Engineers Architects Planners

SUBDIRECTORY	.DGN LOCATOR	SHEET SCALE
	$FILENAME$	AS NOTED

STATE OF NEW HAMPSHIRE
DEPARTMENT OF TRANSPORTATION * BUREAU OF BRIDGE DESIGN

TOWN PORTSMOUTH, NH. - KITTERY, ME. BRIDGE NO. 247\084 STATE PROJECT 13678F

LOCATION U.S. ROUTE 1 OVER PISCATAQUA RIVER

LIFT SPAN - TRUSS ELEVATION 3 OF 3

REVISIONS AFTER PROPOSAL	BY	DATE		BY	DATE
DESIGNED	CSE	09/11	CHECKED	TPZ	09/11
DRAWN	SPL	XX/XX	CHECKED	GT	09/11
QUANTITIES	XX	XX/XX	CHECKED	XX	XX/XX

ISSUE DATE
REV. DATE
FEDERAL PROJECT NO.
SHEET NO.

BRIDGE SHEET B43C OF
FILE NUMBER 107-1-1
TOTAL SHEETS

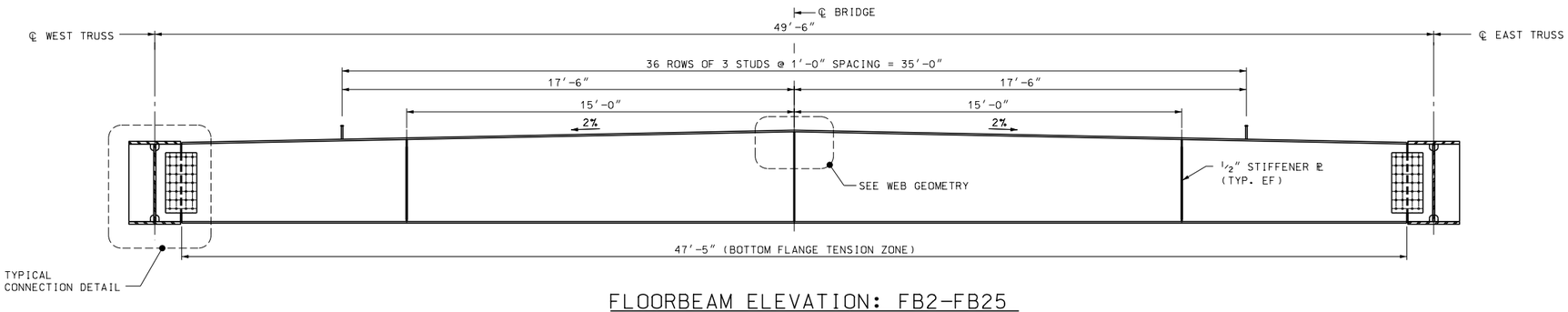

FLOORBEAM ELEVATION: FB2-FB25

3/8″ = 1′-0″

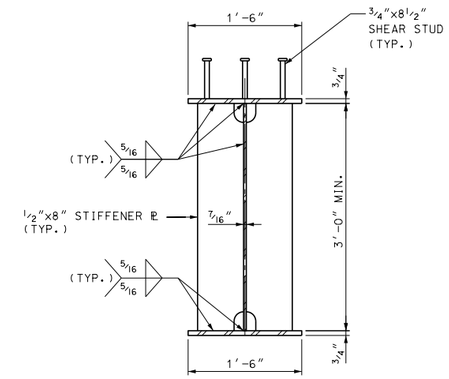

TYPICAL FLOORBEM CROSS SECTION

1″ = 1′-0″

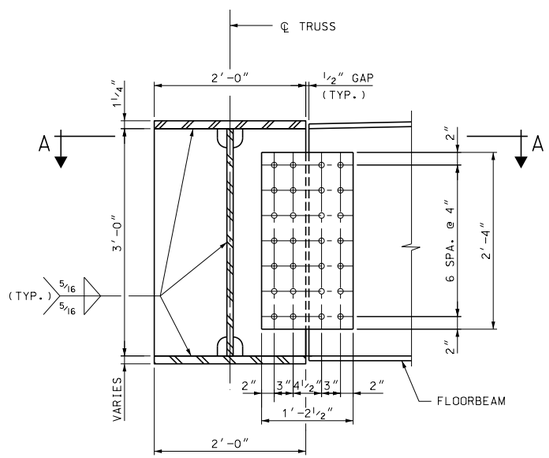

TYPICAL CONNECTION DETAIL

1″ = 1′-0″

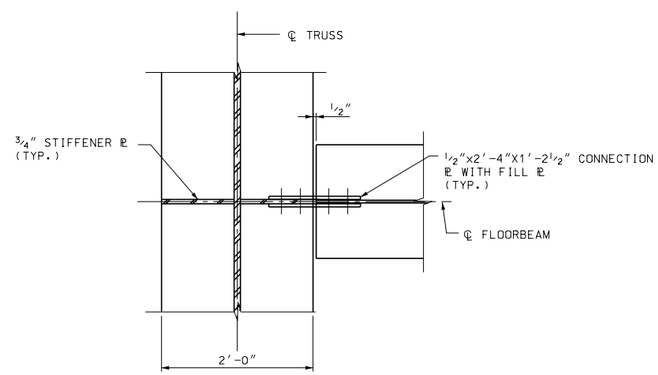

SECTION A-A

1″ = 1′-0″

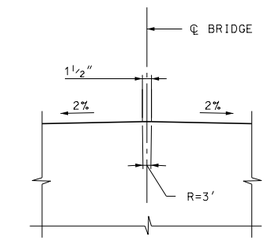

FLOORBEAM WEB GEOMETRY

N.T.S.

NOTES:

1. ALL STRUCTURAL STEEL SHALL CONFORM TO AASHTO M270 (A709) GRADE 50.

2. ALL BOLTS SHALL BE 7/8″ DIA. HIGH STRENGTH ASTM A325 AND SHALL BE GALVANIZED PER THE REQUIREMENTS OF ASTM A153. NUTS AND WASHERS SHALL BE A563 AND F436 RESPECTIVELY, AND SHALL BE GALVANIZED PER REQUIREMENTS OF ASTM A153. ALL HOLES FOR 7/8″ DIA. BOLTS SHALL BE 15/16″ DIA. UNLESS NOTED OTHERWISE. ALL BOLTS, NUTS, AND WASHERS SHALL CONFORM TO SECTION 550 OF THE NHDOT STANDARD SPECIFICATIONS FOR ROAD AND BRIDGE CONSTRUCTION.

3. FOR LIFT TRUSS SPAN FRAMING PLANS, SEE BRIDGE SHEETS B40.

4. FOR LIFT TRUSS SPAN END FLOORBEAM ELEVATION, SEE BRIDGE SHEET B46.

80% Submission
January 10, 2012

ARCHER WESTERN CONTRACTORS

HNTB
HNTB Corporation
The HNTB Companies
Engineers Architects Planners

STATE OF NEW HAMPSHIRE
DEPARTMENT OF TRANSPORTATION * BUREAU OF BRIDGE DESIGN

TOWN PORTSMOUTH, NH. - KITTERY, ME. BRIDGE NO. 247\084 STATE PROJECT 13678F

LOCATION U.S. ROUTE 1 OVER PISCATAQUA RIVER

LIFT SPAN - FLOORBEAM ELEVATION 1 OF 2

BRIDGE SHEET B45 OF

FILE NUMBER 107-1-1

REVISIONS AFTER PROPOSAL	BY	DATE		BY	DATE
DESIGNED	CSE	09/11	CHECKED	GT	09/11
DRAWN	PRE	09/11	CHECKED	TPZ	09/11
QUANTITIES	XX	XX/XX	CHECKED	XX	XX/XX
ISSUE DATE			FEDERAL PROJECT NO.		SHEET NO.
REV. DATE					

TOTAL SHEETS

SUBDIRECTORY	.DGN LOCATOR	SHEET SCALE
	$FILENAME$	AS NOTED

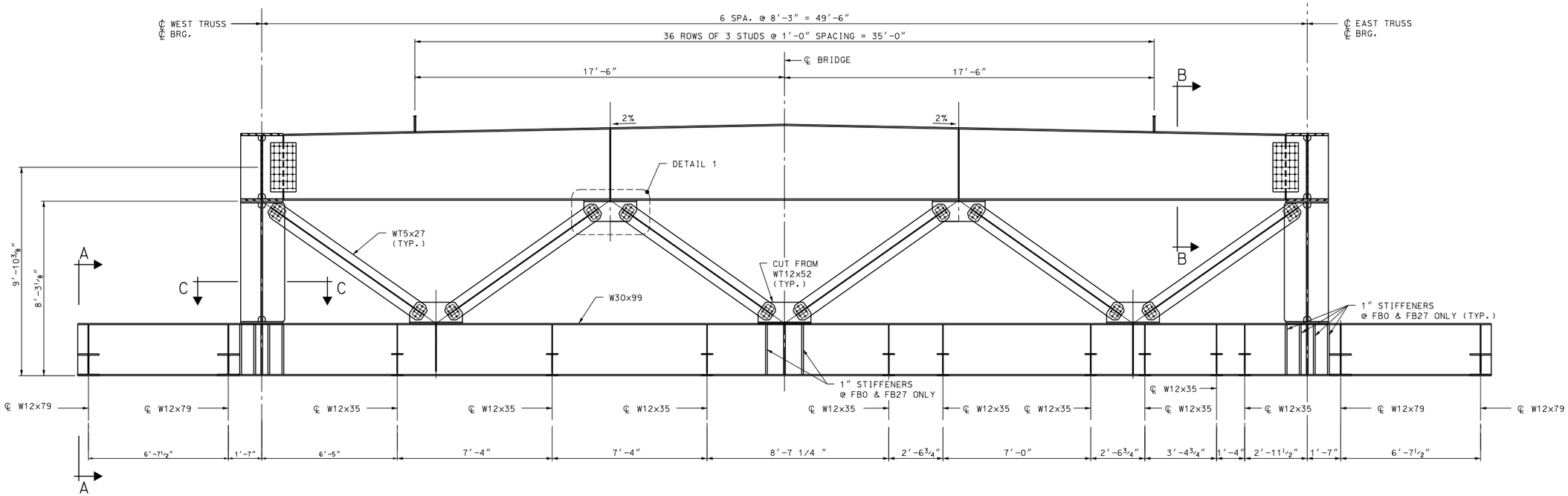

FLOORBEAM FB0, FB1, FB26, FB27 ELEVATION

3/8" = 1'-0"

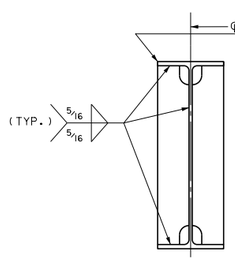

SECTION A-A

1" = 1'-0"

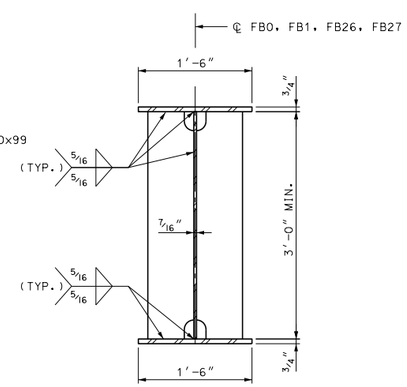

SECTION B-B

1" = 1'-0"

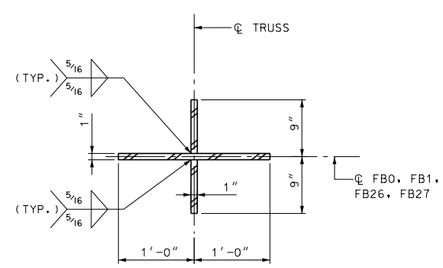

SECTION C-C

1" = 1'-0"

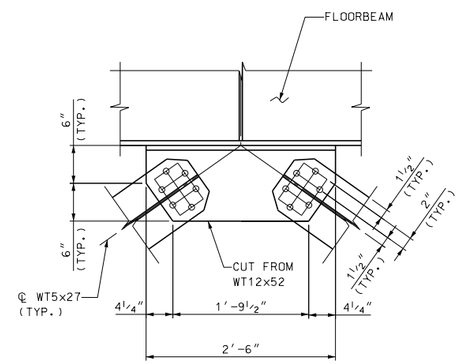

DETAIL 1

1" = 1'-0"

NOTES:

1. ALL STRUCTURAL STEEL SHALL CONFORM TO AASHTO M270 (A709) GRADE 50.
2. ALL BOLTS SHALL BE 7/8" DIA. HIGH STRENGTH ASTM A325 AND SHALL BE GALVANIZED PER THE REQUIREMENTS OF ASTM A153. NUTS AND WASHERS SHALL BE A563 AND F436 RESPECTIVELY, AND SHALL BE GALVANIZED PER REQUIREMENTS OF ASTM A153. ALL HOLES FOR 7/8" DIA. BOLTS SHALL BE 15/16" DIA. UNLESS NOTED OTHERWISE. ALL BOLTS, NUTS, AND WASHERS SHALL CONFORM TO SECTION 550 OF THE NHDOT STANDARD SPECIFICATIONS FOR ROAD AND BRIDGE CONSTRUCTION.
3. FOR LIFT TRUSS SPAN FRAMING PLAN, SEE BRIDGE SHEETS B40.
4. FOR TYPICAL INTERMEDIATE FLOORBEAM ELEVATION, SEE BRIDGE SHEETS B45.
5. FOR MACHINERY ROOM FRAMING PLAN, SEE BRIDGE SHEETS B49.

80% Submission
January 10, 2012

ARCHER WESTERN CONTRACTORS

HNTB
HNTB Corporation
The HNTB Companies
Engineers Architects Planners

SUBDIRECTORY	.DGN LOCATOR	SHEET SCALE
	$FILENAME$	AS NOTED

STATE OF NEW HAMPSHIRE
DEPARTMENT OF TRANSPORTATION * BUREAU OF BRIDGE DESIGN

TOWN PORTSMOUTH, NH. - KITTERY, ME. BRIDGE NO. 247 \ 084 STATE PROJECT 13678F

LOCATION U.S. ROUTE 1 OVER PISCATAQUA RIVER

LIFT SPAN - FLOORBEAM ELEVATION 2 OF 2

BRIDGE SHEET B46 OF

FILE NUMBER 107-1-1

REVISIONS AFTER PROPOSAL		BY	DATE		BY	DATE
	DESIGNED	CSE	09/11	CHECKED	TPZ	09/11
	DRAWN	PRE	09/11	CHECKED	GT	09/11
	QUANTITIES	XX	XX/XX	CHECKED	XX	XX/XX
	ISSUE DATE			FEDERAL PROJECT NO.	SHEET NO.	TOTAL SHEETS
	REV. DATE					

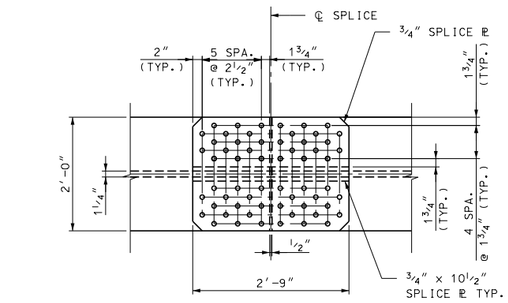

VIEW A-A

3/4"= 1'-0"

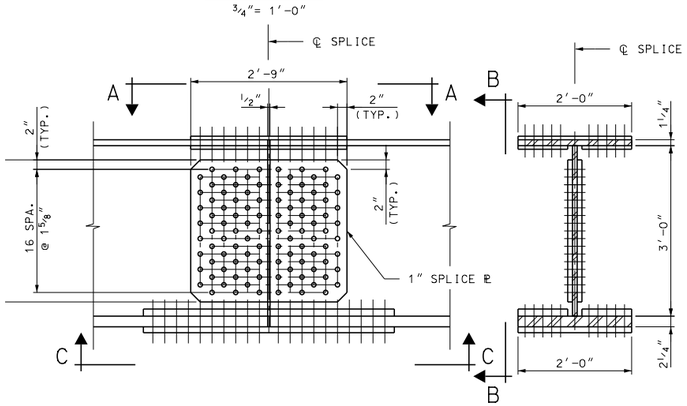

ELEVATION

3/4"= 1'-0"

SECTION B-B

3/4"= 1'-0"

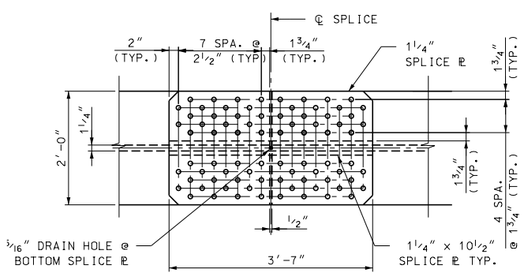

VIEW C-C

3/4"= 1'-0"

LIFT SPAN TRUSS BOTTOM CHORD SPLICE
BS3 AND BS4

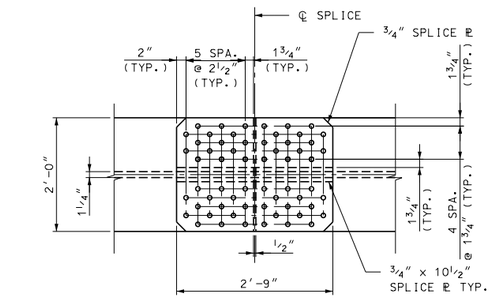

VIEW D-D

3/4"= 1'-0"

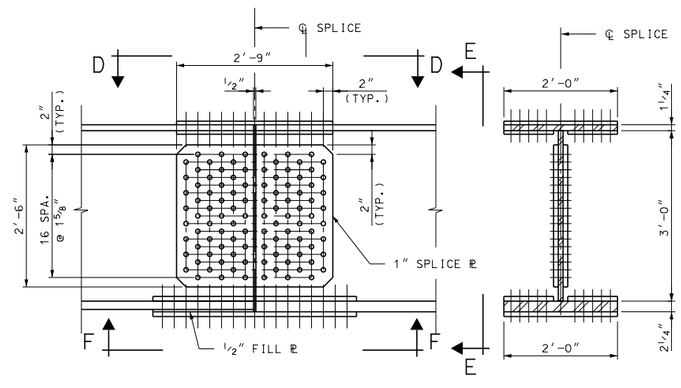

ELEVATION

3/4"= 1'-0"

SECTION E-E

3/4"= 1'-0"

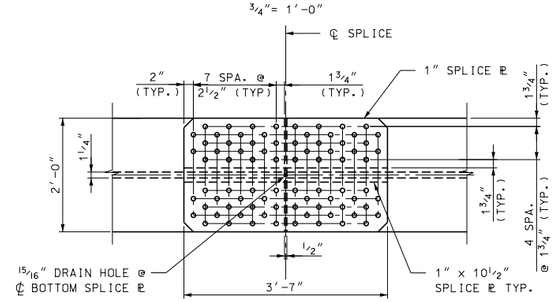

VIEW F-F

3/4"= 1'-0"

LIFT SPAN TRUSS BOTTOM CHORD SPLICE
BS2 AND BS5

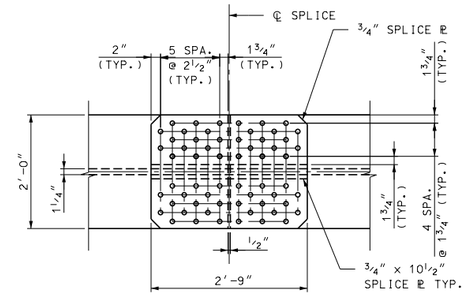

VIEW G-G

3/4"= 1'-0"

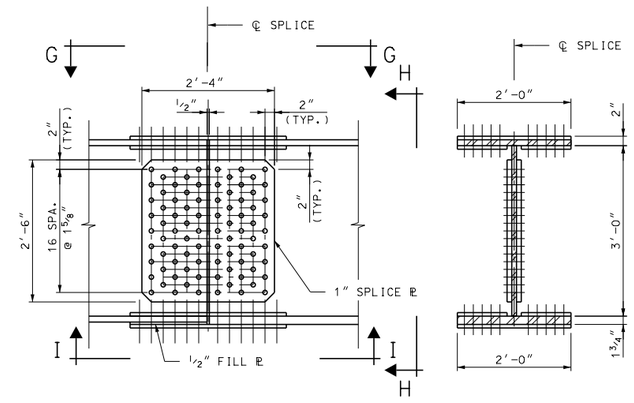

ELEVATION

3/4"= 1'-0"

SECTION H-H

3/4"= 1'-0"

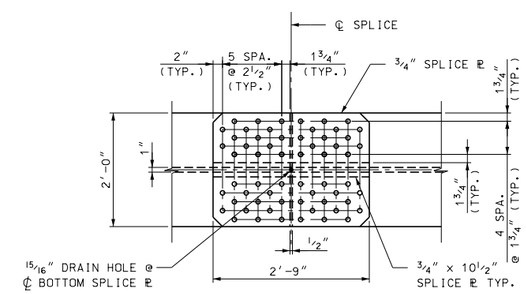

VIEW I-I

3/4"= 1'-0"

LIFT SPAN TRUSS BOTTOM CHORD SPLICE
BS1 AND BS6

LEGEND:

TS(n) INDICATES TOP CHORD SPLICE LOCATION
BS(n) INDICATES BOTTOM CHORD SPLICE LOCATION

NOTES:

1. ALL STRUCTURAL STEEL SHALL BE AASHTO M270 GRADE 50 UNLESS NOTED OTHERWISE.
2. FOR LOCATIONS OF TRUSS CHORD SPLICES, SEE BRIDGE SHEET B16.
3. ALL BOLTS SHALL BE 7/8" DIA. HIGH STRENGTH ASTM A325 AND SHALL BE GALVANIZED PER THE REQUIREMENT OF ASTM A153. NUTS AND WASHERS SHALL BE A563 AND F436 RESPECTIVELY, AND SHALL BE GALVANIZED PER THE REQUIREMENT OF ASTM A153. ALL BOLTS, NUTS, AND WASHERS SHALL CONFORM TO SECTION 550 OF THE NHDOT STANDARD SPECIFICATIONS FOR ROAD AND BRIDGE CONSTRUCTION.
4. ALL SPLICE PLATES SHALL BE SAME GRADE STEEL AS THE TRUSS CHORD.
5. FLANGE AND WEB SPLICE PLATES SHALL BE FURNISHED WITH THERMAL CUT EDGES AS PER SECTION 550 OF THE NHDOT STANDARD SPECIFICATION FOR ROAD AND BRIDGE CONSTRUCTION.

80% Submission
January 10, 2012

ARCHER WESTERN CONTRACTORS

HNTB
HNTB Corporation
The HNTB Companies
Engineers Architects Planners

SUBDIRECTORY	.DGN LOCATOR	SHEET SCALE
	$FILENAME$	AS NOTED

STATE OF NEW HAMPSHIRE
DEPARTMENT OF TRANSPORTATION * BUREAU OF BRIDGE DESIGN

TOWN PORTSMOUTH, NH. - KITTERY, ME. BRIDGE NO. 247 \ 084 STATE PROJECT 13678F

LOCATION U.S. ROUTE 1 OVER PISCATAQUA RIVER

LIFT SPAN - TRUSS CHORD SPLICE DETAILS 1 OF 2

BRIDGE SHEET B47 OF

FILE NUMBER 107-1-1

REVISIONS AFTER PROPOSAL		BY	DATE		BY	DATE
	DESIGNED	CSE	09/11	CHECKED	JN	09/11
	DRAWN	PRE	09/11	CHECKED	GT	09/11
	QUANTITIES	XX	XX/XX	CHECKED	XX	XX/XX

ISSUE DATE	FEDERAL PROJECT NO.	SHEET NO.	TOTAL SHEETS
REV. DATE			

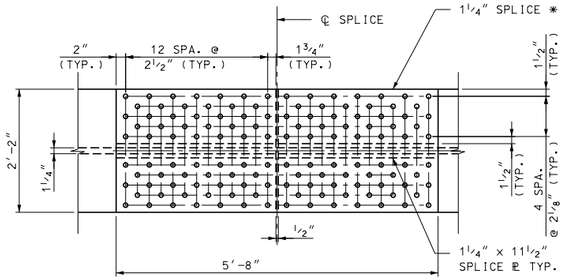

VIEW A-A
¾"= 1'-0"

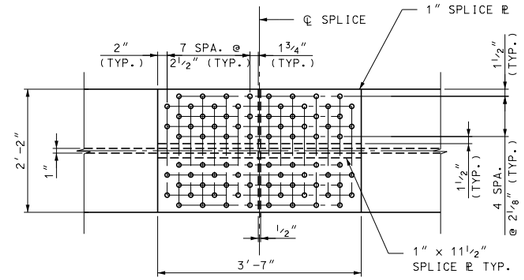

VIEW D-D
¾"= 1'-0"

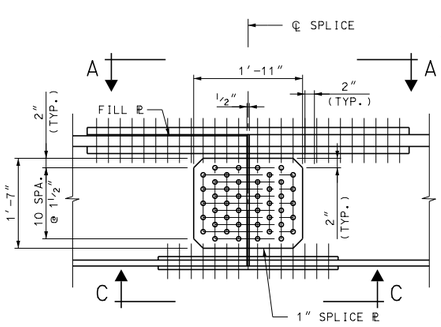

ELEVATION
¾"= 1'-0"

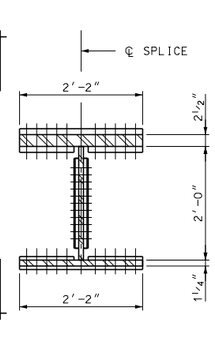

SECTION B-B
¾"= 1'-0"

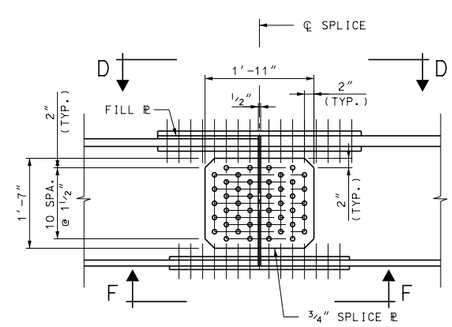

ELEVATION
¾"= 1'-0"

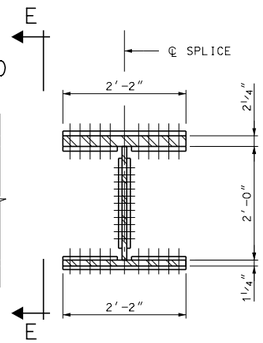

SECTION E-E
¾"= 1'-0"

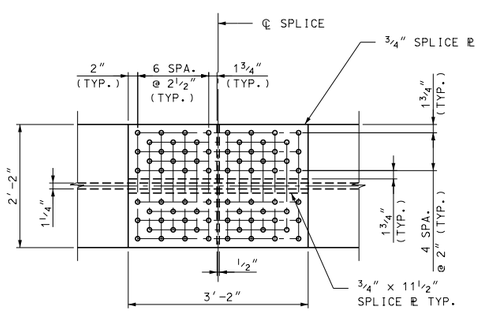

VIEW C-C
¾"= 1'-0"

LIFT SPAN TRUSS TOP CHORD SPLICE
TS2 AND TS3

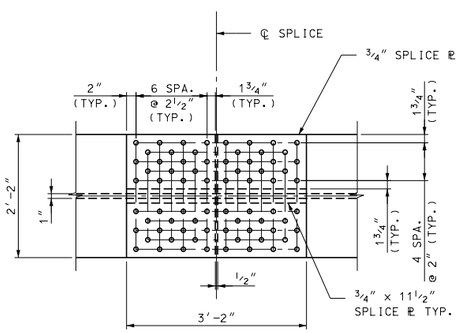

VIEW F-F
¾"= 1'-0"

LIFT SPAN TRUSS TOP CHORD SPLICE
TS1 AND TS4

LEGEND:

TS(n) INDICATES TOP CHORD SPLICE LOCATION
BS(n) INDICATES BOTTOM CHORD SPLICE LOCATION

NOTES:

1. ALL STRUCTURAL STEEL SHALL BE AASHTO M270 GRADE 50 UNLESS NOTED OTHERWISE.
2. FOR LOCATIONS OF TRUSS CHORD SPLICES, SEE BRIDGE SHEET B1G.
3. ALL BOLTS SHALL BE ⅞" DIA. HIGH STRENGTH ASTM A325 AND SHALL BE GALVANIZED PER THE REQUIREMENT OF ASTM A153. NUTS AND WASHERS SHALL BE A563 AND F43G RESPECTIVELY, AND SHALL BE GALVANIZED PER THE REQUIREMENT OF ASTM A153. ALL BOLTS, NUTS, AND WASHERS SHALL CONFORM TO SECTION 550 OF THE NHDOT STANDARD SPECIFICATIONS FOR ROAD AND BRIDGE CONSTRUCTION.
4. ALL SPLICE PLATES SHALL BE SAME GRADE STEEL AS THE TRUSS CHORD.
5. FLANGE AND WEB SPLICE PLATES SHALL BE FURNISHED WITH THERMAL CUT EDGES AS PER SECTION 550 OF THE NHDOT STANDARD SPECIFICATION FOR ROAD AND BRIDGE CONSTRUCTION.

80% Submission
January 10, 2012

ARCHER WESTERN CONTRACTORS

HNTB
HNTB Corporation
The HNTB Companies
Engineers Architects Planners

STATE OF NEW HAMPSHIRE
DEPARTMENT OF TRANSPORTATION * BUREAU OF BRIDGE DESIGN

TOWN PORTSMOUTH, NH. - KITTERY, ME. BRIDGE NO. 247 \ 084 STATE PROJECT 13678F
LOCATION U.S. ROUTE 1 OVER PISCATAQUA RIVER

LIFT SPAN - TRUSS CHORD SPLICE DETAILS 2 OF 2

BRIDGE SHEET B47A OF

REVISIONS AFTER PROPOSAL	BY	DATE		BY	DATE
DESIGNED	CSE	09/11	CHECKED	JN	09/11
DRAWN	PRE	09/11	CHECKED	GT	09/11
QUANTITIES	XX	XX/XX	CHECKED	XX	XX/XX

FILE NUMBER 107-1-1

SUBDIRECTORY	.DGN LOCATOR	SHEET SCALE	ISSUE DATE	FEDERAL PROJECT NO.	SHEET NO.	TOTAL SHEETS
	$FILENAME$	AS NOTED	REV. DATE			

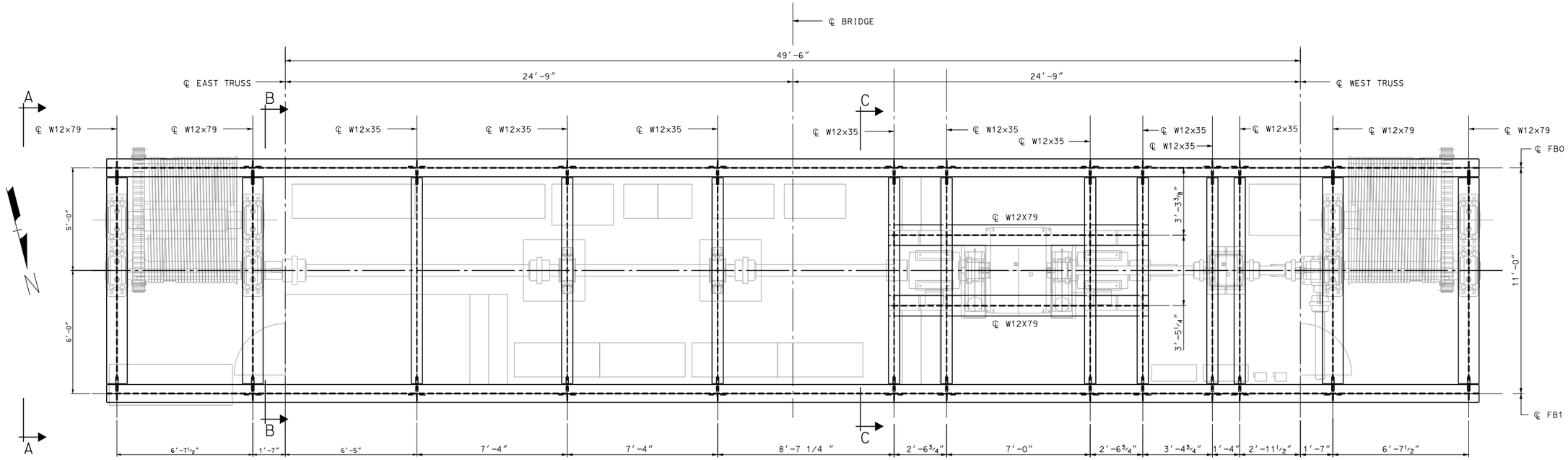

SOUTH MACHINERY ROOM PLAN

⅜″ = 1′-0″

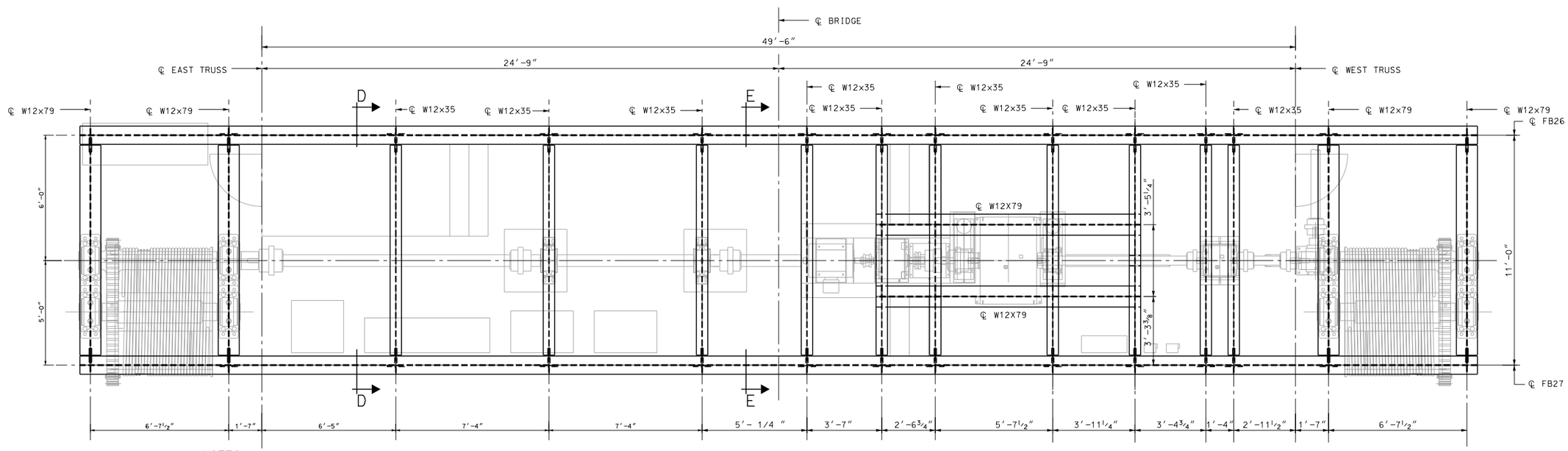

NORTH MACHINERY ROOM PLAN

⅜″ = 1′-0″

NOTES:

1. ALL STRUCTURE STEEL SHALL CONFORM TO AASHTO M270 (A709) GRADE 50.
2. ALL BOLTS SHALL BE ⅞″ DIA. HIGH STRENGTH ASTM A325 AND SHALL BE GALVANIZED PER THE REQUIREMENTS OF ASTM A153. NUTS AND WASHERS SHALL BE A563 AND F436 RESPECTIVELY, AND SHALL BE GALVANIZED PER REQUIREMENTS OF ASTM A153. ALL BOLTS, NUTS, AND WASHERS SHALL CONFORM TO SECTION 550 OF THE NHDOT STANDARD SPECIFICATIONS FOR ROAD AND BRIDGE CONSTRUCTION.
3. FOR LIFT SPAN END FLOORBEAM ELEVATION, SEE BRIDGE SHEETS B46.
4. FOR MACHINERY LAYOUT AND DETAILS, SEE BRIDGE SHEETS M13 AND M18.
5. FOR MACHINERY VIEW A-A,B-B,C-C,D-D, AND E-E, SEE BRIDGE SHEET B49A.

80% Submission
January 10, 2012

ARCHER WESTERN CONTRACTORS

HNTB
HNTB Corporation
The HNTB Companies
Engineers Architects Planners

SUBDIRECTORY	.DGN LOCATOR	SHEET SCALE
	$FILENAME$	AS NOTED

STATE OF NEW HAMPSHIRE
DEPARTMENT OF TRANSPORTATION * BUREAU OF BRIDGE DESIGN

TOWN PORTSMOUTH, NH. - KITTERY, ME. BRIDGE NO. 247 \ 084 STATE PROJECT 13678F

LOCATION U.S. ROUTE 1 OVER PISCATAQUA RIVER

LIFT SPAN - MACHINERY ROOM PLAN

REVISIONS AFTER PROPOSAL		BY	DATE		BY	DATE
	DESIGNED	CSE	09/11	CHECKED	TPZ	09/11
	DRAWN	JN	09/11	CHECKED	GT	09/11
	QUANTITIES	XX	XX/XX	CHECKED	XX	XX/XX
	ISSUE DATE		FEDERAL PROJECT NO.		SHEET NO.	
	REV. DATE					

BRIDGE SHEET B49 OF

FILE NUMBER 107-1-1

TOTAL SHEETS

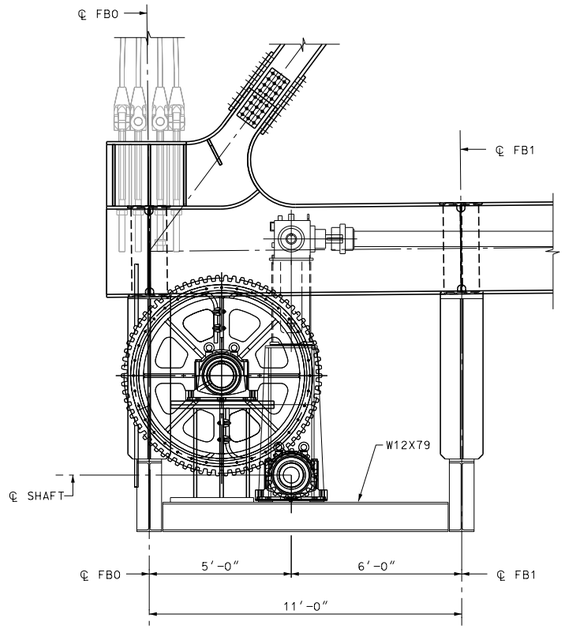

VIEW A-A

3/8″ = 1′-0″

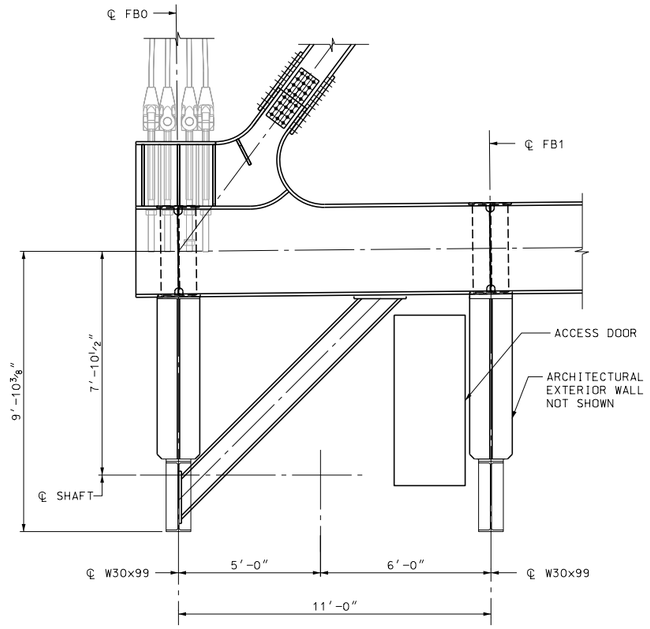

VIEW B-B

3/8″ = 1′-0″

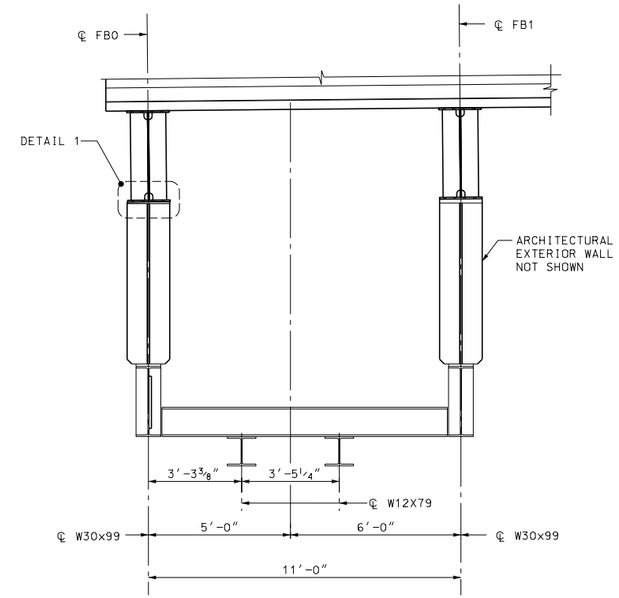

VIEW C-C

3/8″ = 1′-0″

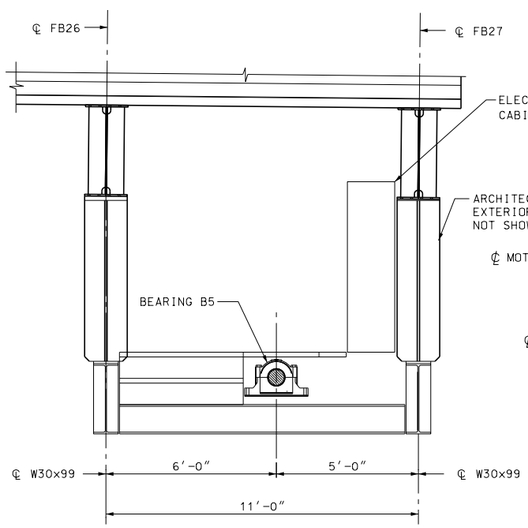

VIEW D-D

3/8″ = 1′-0″

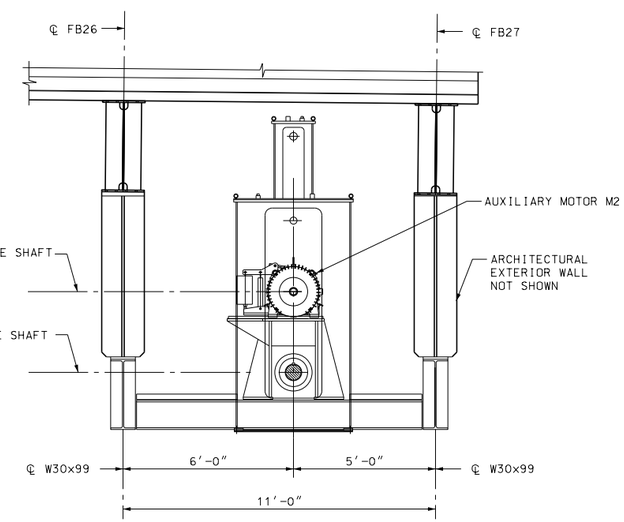

VIEW E-E

3/8″ = 1′-0″

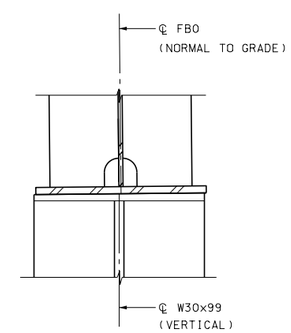

DETAIL 1

1 1/2″ = 1′-0″

NOTES:

1. ALL STRUCTURE STEEL SHALL CONFORM TO AASHTO M270 (A709) GRADE 50.
2. ALL BOLTS SHALL BE 7/8″ DIA. HIGH STRENGTH ASTM A325 AND SHALL BE GALVANIZED PER THE REQUIREMENTS OF ASTM A153. NUTS AND WASHERS SHALL BE A563 AND F436 RESPECTIVELY, AND SHALL BE GALVANIZED PER REQUIREMENTS OF ASTM A153. ALL BOLTS, NUTS, AND WASHERS SHALL CONFORM TO SECTION 550 OF THE NHDOT STANDARD SPECIFICATIONS FOR ROAD AND BRIDGE CONSTRUCTION.
3. FOR LIFT SPAN END FLOORBEAM ELEVATION, SEE BRIDGE SHEETS B46.
4. FOR MACHINERY LAYOUT AND DETAILS, SEE BRIDGE SHEETS M13 AND M18.
5. FOR MACHINERY ROOM WALL SECTIONS AND DETAILS, SEE BUILDING STRUCTURES BRIDGE SHEETS.

80% Submission
January 10, 2012

ARCHER WESTERN CONTRACTORS

HNTB
HNTB Corporation
The HNTB Companies
Engineers Architects Planners

SUBDIRECTORY	.DGN LOCATOR	SHEET SCALE
	$FILENAME$	AS NOTED

STATE OF NEW HAMPSHIRE
DEPARTMENT OF TRANSPORTATION * BUREAU OF BRIDGE DESIGN

TOWN PORTSMOUTH, NH. - KITTERY, ME. BRIDGE NO. 247 \ 084 STATE PROJECT 13678F

LOCATION U.S. ROUTE 1 OVER PISCATAQUA RIVER

LIFT SPAN - MACHINERY ROOM CROSS SECTION

BRIDGE SHEET B49A OF

REVISIONS AFTER PROPOSAL

	BY	DATE		BY	DATE
DESIGNED	CSE	09/11	CHECKED	TPZ	09/11
DRAWN	JN	09/11	CHECKED	GT	09/11
QUANTITIES	XX	XX/XX	CHECKED	XX	XX/XX

FILE NUMBER 107-1-1

ISSUE DATE
REV. DATE
FEDERAL PROJECT NO.
SHEET NO.
TOTAL SHEETS

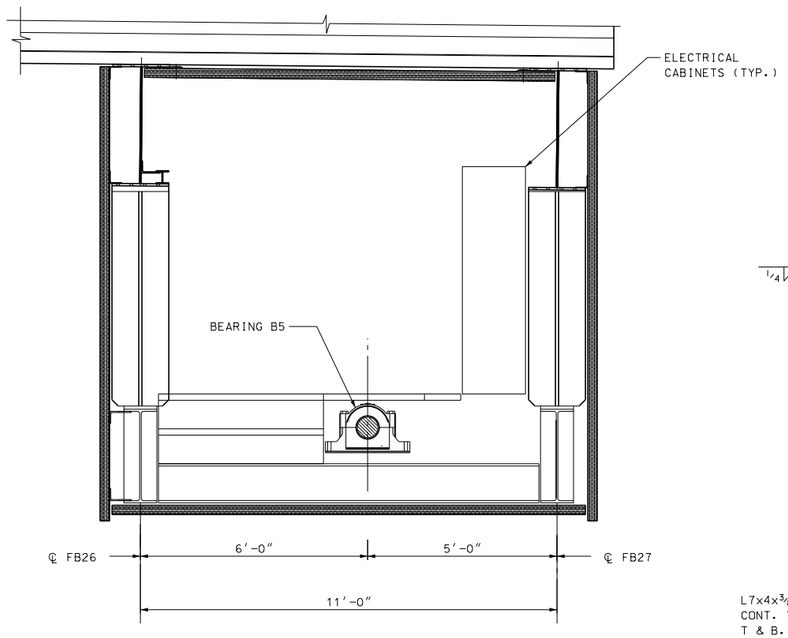

ELEVATION

1/2″ = 1′-0″

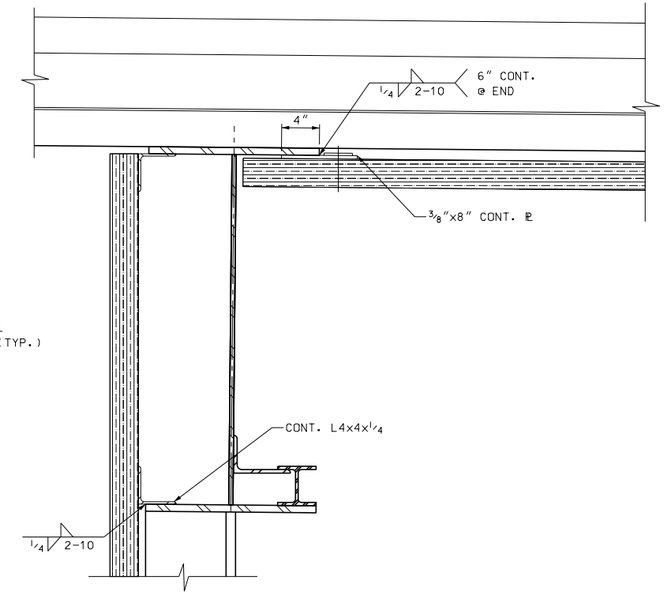

EXTERIOR WALL DETAIL
HEAD OF WALL

1 1/2″ = 1′-0″

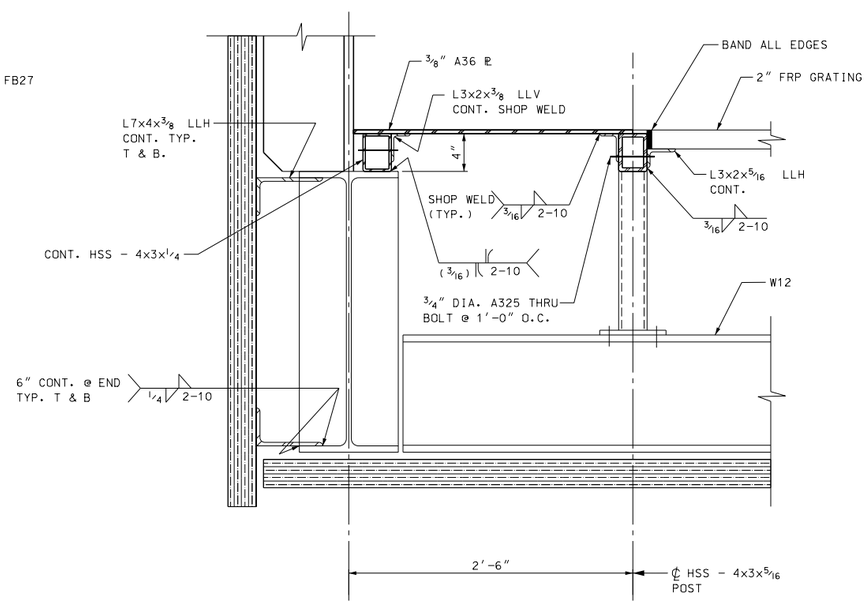

EXTERIOR WALL DETAIL
BASE AND SOFFIT

1 1/2″ = 1′-0″

NOTES:

1. ALL STRUCTURE STEEL SHALL CONFORM TO AASHTO M270 (A709) GRADE 50.
2. ALL BOLTS SHALL BE 7/8″ DIA. HIGH STRENGTH ASTM A325 AND SHALL BE GALVANIZED PER THE REQUIREMENTS OF ASTM A153. NUTS AND WASHERS SHALL BE A563 AND F436 RESPECTIVELY, AND SHALL BE GALVANIZED PER REQUIREMENTS OF ASTM A153. ALL BOLTS, NUTS, AND WASHERS SHALL CONFORM TO SECTION 550 OF THE NHDOT STANDARD SPECIFICATIONS FOR ROAD AND BRIDGE CONSTRUCTION.
3. FOR LIFT SPAN END FLOORBEAM ELEVATION, SEE BRIDGE SHEETS B46.
4. FOR MACHINERY LAYOUT AND DETAILS, SEE BRIDGE SHEETS M13 AND M18.
5. FOR MACHINERY ROOM WALL SECTIONS AND DETAILS, SEE BUILDING STRUCTURES BRIDGE SHEETS.

80% Submission
January 10, 2012

ARCHER WESTERN CONTRACTORS

HNTB
HNTB Corporation
The HNTB Companies
Engineers Architects Planners

SUBDIRECTORY	.DGN LOCATOR	SHEET SCALE
	$FILENAME$	AS NOTED

STATE OF NEW HAMPSHIRE
DEPARTMENT OF TRANSPORTATION * BUREAU OF BRIDGE DESIGN

TOWN PORTSMOUTH, NH. - KITTERY, ME. BRIDGE NO. 247 \ 084 STATE PROJECT 13678F

LOCATION U.S. ROUTE 1 OVER PISCATAQUA RIVER

LIFT SPAN - MACHINERY ROOM DETAILS

BRIDGE SHEET B49B OF

REVISIONS AFTER PROPOSAL		BY	DATE		BY	DATE
	DESIGNED	CSE	09/11	CHECKED	TPZ	09/11
	DRAWN	JN	09/11	CHECKED	GT	09/11
	QUANTITIES	XX	XX/XX	CHECKED	XX	XX/XX
	ISSUE DATE		FEDERAL PROJECT NO.		SHEET NO.	TOTAL SHEETS
	REV. DATE					

FILE NUMBER 107-1-1

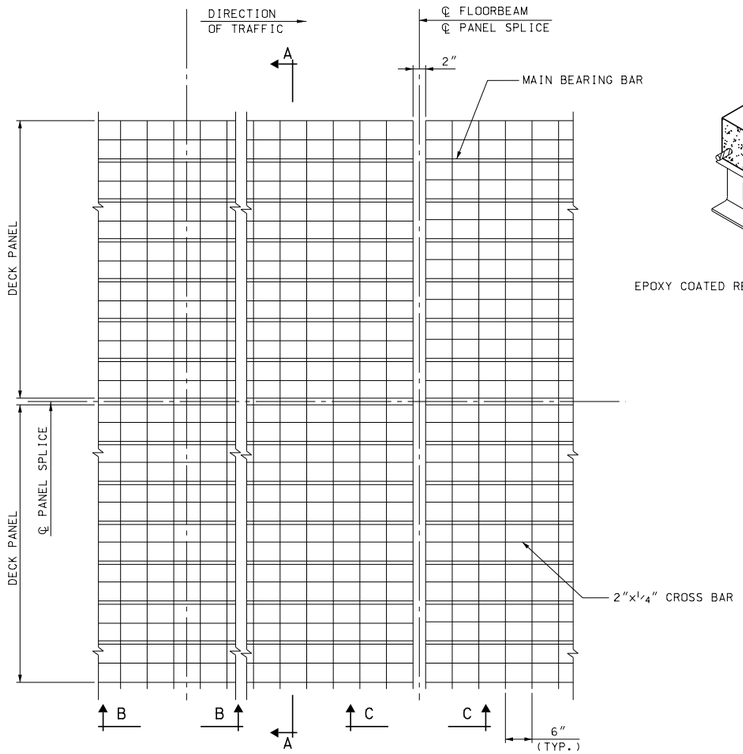

ROADWAY EXODERMIC PANEL

N.T.S.

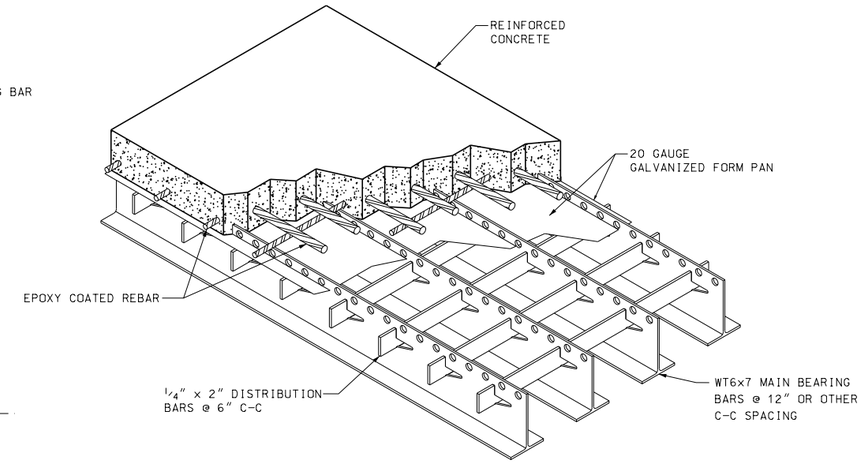

EXODERMIC BRIDGE DECK

(ISOMETRIC VIEW)
N.T.S.

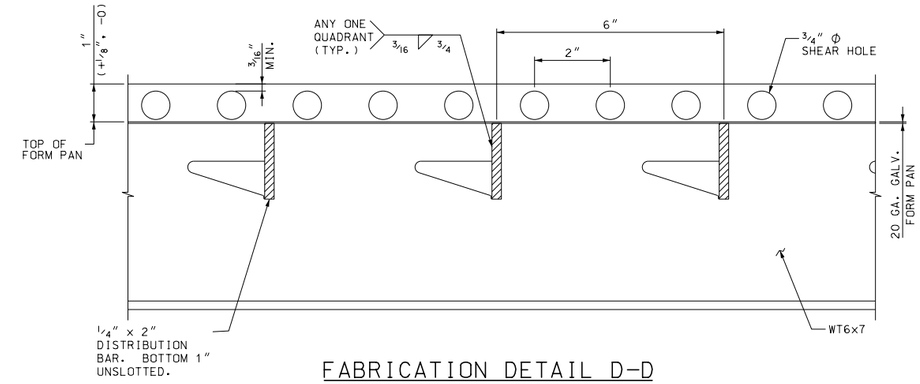

FABRICATION DETAIL D-D

6" = 1'-0"

NOTE:

TOP OF FORM PAN LOCATED BELOW BOTTOM OF 3/4"Φ SHEAR HOLES TO MINIMIZE CONCRETE LEAKAGE DURING POUR.

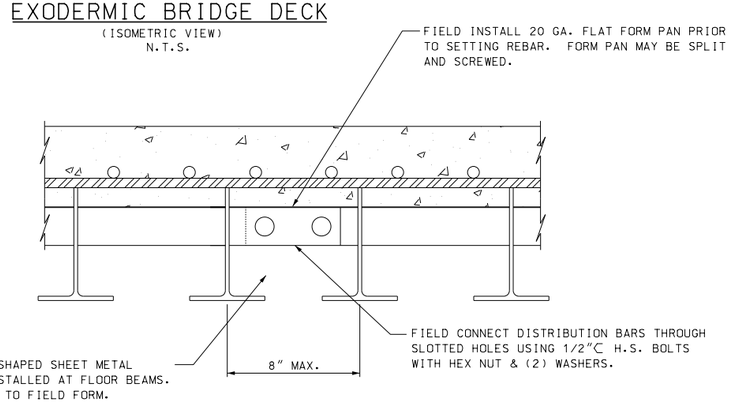

SECTION C-C

(TYPICAL CONNECTION BETWEEN PANELS)
3" = 1'-0"

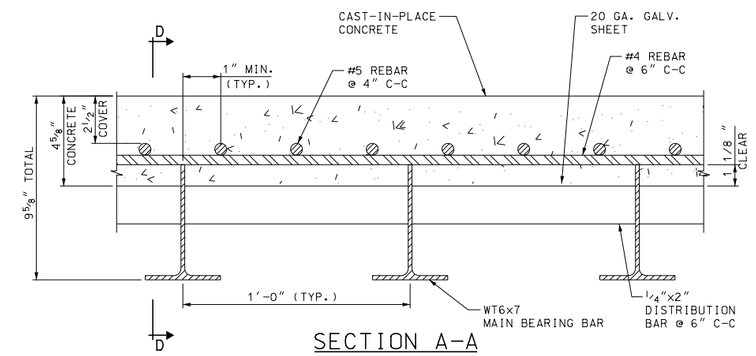

SECTION A-A

(TYPICAL SECTION THROUGH DECK)
3" = 1'-0"

NOTE:

REBAR LAYOUT SHALL BE AS SHOWN IN ORDER TO PERMIT THE MAXIMUM AMOUNT OF ROOM FOR ATTACHMENT OF SHEAR STUDS TO STRINGERS AND ADJUSTMENT OF LEVELING BOLTS. ALL REBAR SHALL BE EPOXY COATED.

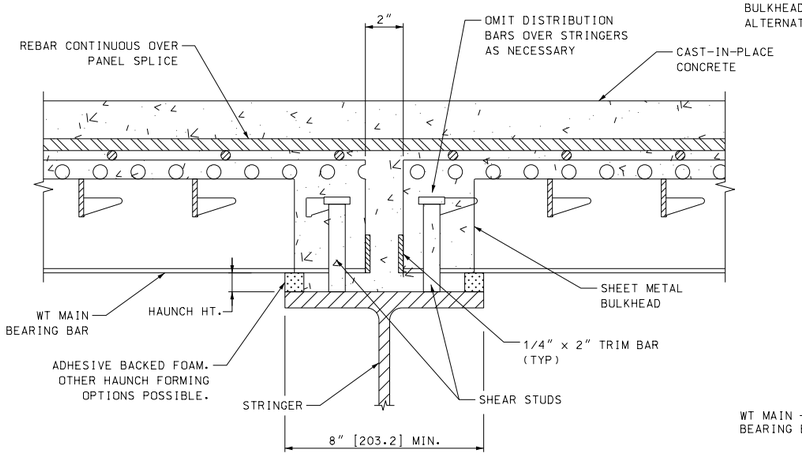

SPLICE BETWEEN PANELS (OPTION 2)

3" = 1'-0"

NOTES:

LEVELING BOLTS NOT SHOWN.

OMIT DISTRIBUTION BARS OVER STRINGERS AS NECESSARY TO PROVIDE CLEARANCE FOR SHEAR STUDS AND LEVELING BOLTS.

NOT RECOMMENDED FOR STRINGER FLANGES LESS THAN 8".

FOR HAUNCH HEIGHTS LESS THAN 1.5", PLACE HIGH STRENGTH POURABLE GROUT UP TO THE BOTTOM OF THE WT MAIN BAR PRIOR TO POURING CONCRETE.

DEEPER TRIM BARS CAN BE BOLTED TOGETHER WHERE THEY MEET OVER A STRINGER. HOWEVER, NORMAL DISTORTION OF THE GRID PANELS DUE TO HOT-DIP GALVANIZATION MUST BE TAKEN INTO ACCOUNT IF THIS OPTION IS SPECIFIED.

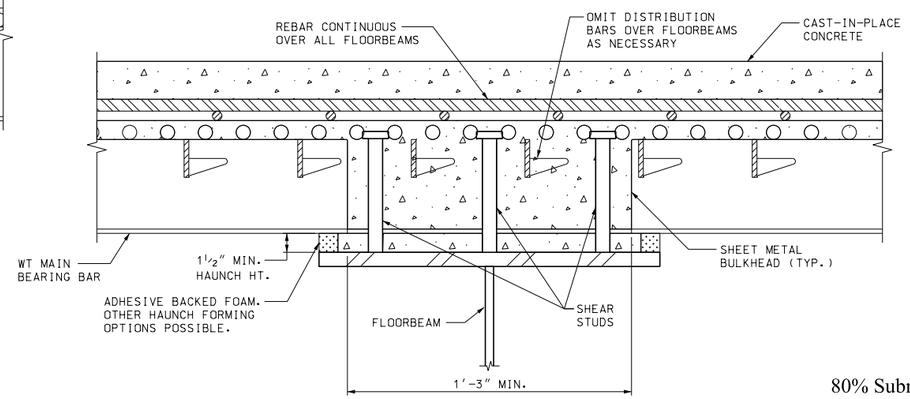

SECTION B-B

(CONNECTION TO FLOORBEAM)
3" = 1'-0"

NOTES:

LEVELING BOLTS NOT SHOWN.

OMIT DISTRIBUTION BARS OVER FLOORBEAMS AS NECESSARY TO PROVIDE CLEARANCE FOR SHEAR STUDS AND LEVELING BOLTS.

NOTES:

1. STEEL GRID SHALL CONFORM TO ASTM A709 GRADE 50 AND SHALL BE GALVANIZEDIN ACCORDANCE WITH ASTM A123.
2. LEVELING PLATE SHALL CONFORM TO ASTM A709 GR 3G. TRIM PLATES AND FORM PANS SHALL BE GALVANIZED.
3. REINFORCING STEEL IN GRID SHALL CONFORM TO ASTM AG15 GRADE GO AND SHALL BE EPOXY COATED.
4. USE LEVELING BOLTS TO ADJUST DECK TO ROADWAY PROFILE (SEE ROADWAY PLANS FOR ROADWAY PROFILE).
5. LIGHTWEIGHT CONCRETE SHALL HAVE A 28 DAY STRENGTH OF f'c = 4000 PSI AND UNIT WEIGHT 115 PCF UNREINFORCED.
6. STEEL GRID DECK SHALL BE PAID FOR UNDER ITEM XXX.
7. LIGHTWEIGHT CONCRETE FILL AND OVERFILL SHALL BE PAID FOR UNDER ITEM XXX.
8. EPOXY COATED REINFORCING STEEL SHALL BE PAID FOR UNDER ITEM XXX.

80% Submission
January 10, 2012

ARCHER WESTERN CONTRACTORS

HNTB
HNTB Corporation
The HNTB Companies
Engineers Architects Planners

SUBDIRECTORY	.DGN LOCATOR	SHEET SCALE
	$FILENAME$	

STATE OF NEW HAMPSHIRE
DEPARTMENT OF TRANSPORTATION * BUREAU OF BRIDGE DESIGN

TOWN PORTSMOUTH, NH. - KITTERY, ME. BRIDGE NO. 247\084 STATE PROJECT 13678F

LOCATION U.S. ROUTE 1 OVER PISCATAQUA RIVER

LIFT SPAN - EXODERMIC DECK DETAILS 1 OF 2

REVISIONS AFTER PROPOSAL		BY	DATE		BY	DATE
	DESIGNED	CSE	09/11	CHECKED	TPZ	09/11
	DRAWN	SPL	09/11	CHECKED	GT	09/11
	QUANTITIES	XX	XX/XX	CHECKED	XX	XX/XX
	ISSUE DATE		FEDERAL PROJECT NO.		SHEET NO.	
	REV. DATE					

BRIDGE SHEET B50 OF
FILE NUMBER 107-1-1
TOTAL SHEETS

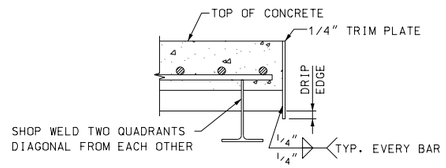

LONGITUDINAL PANEL TRIM PLATE

1/2" = 1'-0"

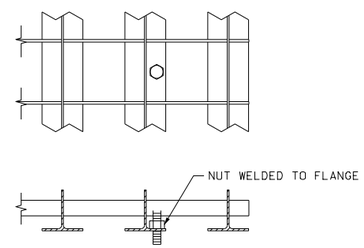

HEIGHT ADJUSTMENT DETAILS

1/2" = 1'-0"

NOTES:

BOLTS AND NUTS SHALL BE 3/4"C ASTM A307 AND A563, RESPECTIVELY.

USE TWO PER SUPPORTING BEAM PER PANEL FOR TYPICAL PRECAST PANELS UP TO 9' WIDE. DEVICES TO BE LOCATED ON FIRST INTERIOR MAIN BAR FROM EACH PANEL EDGE.

FOR CAST-IN-PLACE APPLICATIONS, USE THREE PER SUPPORTING BEAM PE PANEL FOR TYPICAL PANELS UP TO 9' WIDE. DEVICES TO BE LOCATED O FIRST INTERIOR MAIN BAR AND ON A BAR AT OR CLOSE TO THE PANEL CENTERLINE.

80% Submission
January 10, 2012

ARCHER WESTERN CONTRACTORS

HNTB
HNTB Corporation
The HNTB Companies
Engineers Architects Planners

SUBDIRECTORY	.DGN LOCATOR	SHEET SCALE
	$FILENAME$	

STATE OF NEW HAMPSHIRE
DEPARTMENT OF TRANSPORTATION * BUREAU OF BRIDGE DESIGN

TOWN PORTSMOUTH, NH. - KITTERY, ME. BRIDGE NO. 247 \ 084 STATE PROJECT 13678F

LOCATION U.S. ROUTE 1 OVER PISCATAQUA RIVER

LIFT SPAN - EXODERMIC DECK DETAILS 2 OF 2

BRIDGE SHEET B50A OF

REVISIONS AFTER PROPOSAL		BY	DATE		BY	DATE
	DESIGNED	CSE	09/11	CHECKED	TPZ	09/11
	DRAWN	SPL	09/11	CHECKED	GT	09/11
	QUANTITIES	XX	XX/XX	CHECKED	XX	XX/XX
	ISSUE DATE		FEDERAL PROJECT NO.		SHEET NO.	
	REV. DATE					

FILE NUMBER 107-1-1

TOTAL SHEETS

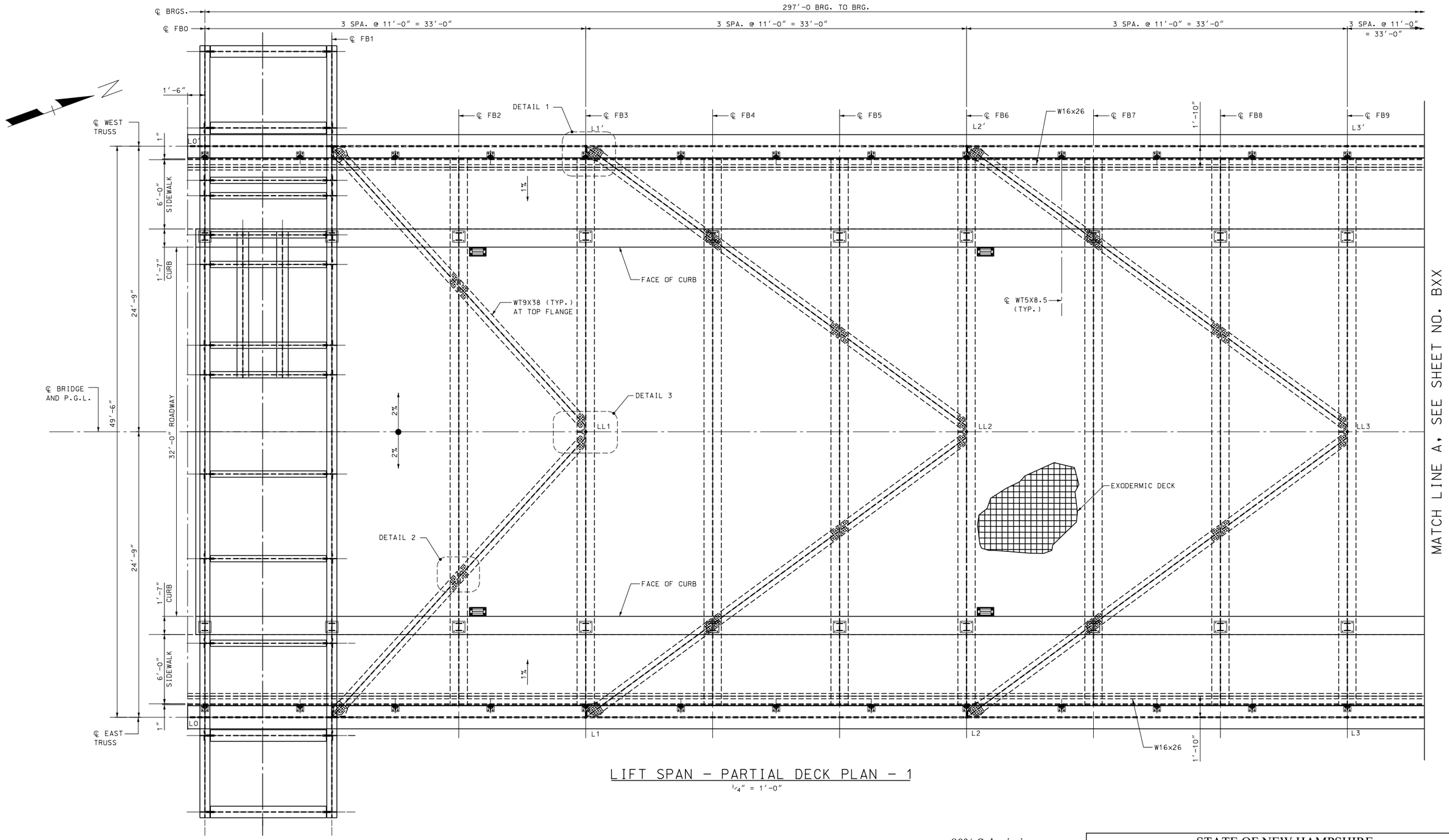

LIFT SPAN – PARTIAL DECK PLAN – 1

1/4" = 1'-0"

NOTES:

1. FOR DECK JOINT DETAILS SEE BRIDGE SHEET B55.
2. FOR SIDEWALK DETAILS, SEE BRIDGE SHEET B61.
3. FOR TYPICAL LIFT SPAN DECK CROSS SECTION, SEE BRIDGE SHEET B41.
4. FOR DETAILS 1 THRU 3, SEE BRIDGE SHEET B54.
5. PANEL POINT NUMBERS WITH A PRIME SYMBOL DESIGNATE PANELS LOCATED ON THE WEST FASCIA OF THE STRUCTURE.

LEGEND:

L (n)	INDICATES BOTTOM CHORD PANEL POINT
FB (n)	INDICATES FLOORBEAM NUMBER
LL (n)	INDICATES LOWER LATERAL PANEL POINT

80% Submission
January 10, 2012

ARCHER WESTERN CONTRACTORS

HNTB
HNTB Corporation
The HNTB Companies
Engineers Architects Planners

SUBDIRECTORY	.DGN LOCATOR	SHEET SCALE
	$FILENAME$	1/4" = 1'-0"

STATE OF NEW HAMPSHIRE
DEPARTMENT OF TRANSPORTATION * BUREAU OF BRIDGE DESIGN

TOWN PORTSMOUTH, NH. - KITTERY, ME. BRIDGE NO. 247 \ 084 STATE PROJECT 13678F

LOCATION U.S. ROUTE 1 OVER PISCATAQUA RIVER

LIFT SPAN - PARTIAL DECK PLAN 1 OF 2

BRIDGE SHEET B51 OF

FILE NUMBER 107-1-1

REVISIONS AFTER PROPOSAL		BY	DATE		BY	DATE
	DESIGNED	CSE	09/11	CHECKED	TPZ	09/11
	DRAWN	SPL	09/11	CHECKED	GT	09/11
	QUANTITIES	XX	XX/XX	CHECKED	XX	XX/XX

ISSUE DATE | FEDERAL PROJECT NO. | SHEET NO. | TOTAL SHEETS

REV. DATE

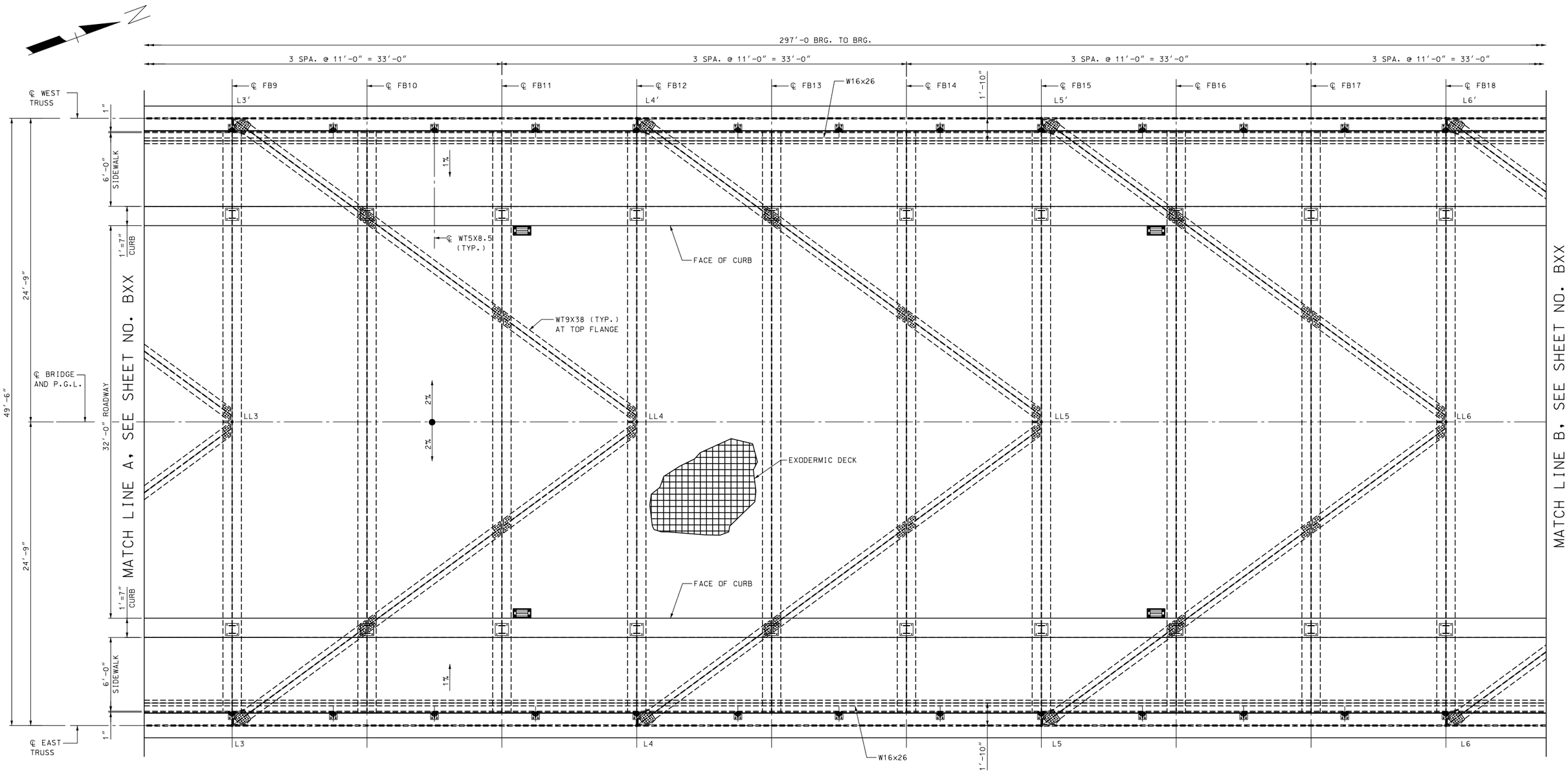

LIFT SPAN - PARTIAL DECK PLAN - 2

1/4" = 1'-0"

NOTES:

1. FOR SIDEWALK DETAILS, SEE BRIDGE SHEET BG1.
2. FOR TYPICAL LIFT SPAN DECK CROSS SECTION, SEE BRIDGE SHEET B41.
3. PANEL POINT NUMBERS WITH A PRIME SYMBOL DESIGNATE PANELS LOCATED ON THE WEST FASCIA OF THE STRUCTURE.

LEGEND:

L (n)	INDICATES BOTTOM CHORD PANEL POINT
FB (n)	INDICATES FLOORBEAM NUMBER
LL (n)	INDICATES LOWER LATERAL PANEL POINT

80% Submission
January 10, 2012

ARCHER WESTERN CONTRACTORS

HNTB
HNTB Corporation
The HNTB Companies
Engineers Architects Planners

SUBDIRECTORY	.DGN LOCATOR	SHEET SCALE
	$FILENAME$	1/4" = 1'-0"

STATE OF NEW HAMPSHIRE
DEPARTMENT OF TRANSPORTATION * BUREAU OF BRIDGE DESIGN

TOWN PORTSMOUTH, NH. - KITTERY, ME. BRIDGE NO. 247\084 STATE PROJECT 13678F

LOCATION U.S. ROUTE 1 OVER PISCATAQUA RIVER

LIFT SPAN - PARTIAL DECK PLAN 2 OF 2

REVISIONS AFTER PROPOSAL		BY	DATE		BY	DATE
	DESIGNED	CSE	09/11	CHECKED	TPZ	09/11
	DRAWN	SPL	09/11	CHECKED	GT	09/11
	QUANTITIES	XX	XX/XX	CHECKED	XX	XX/XX
	ISSUE DATE		FEDERAL PROJECT NO.		SHEET NO.	
	REV. DATE					

BRIDGE SHEET B52 OF
FILE NUMBER 107-1-1
TOTAL SHEETS

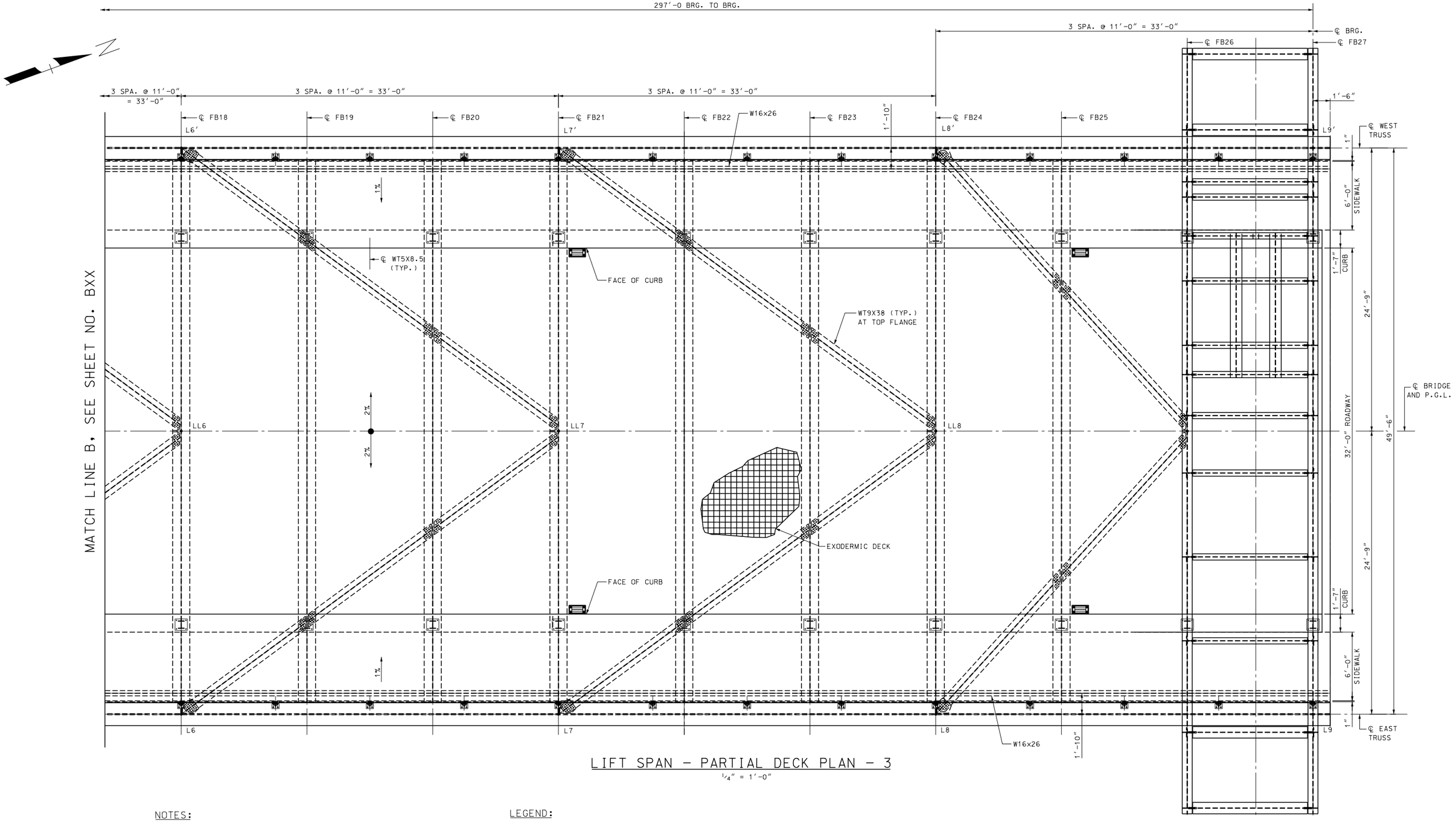

LIFT SPAN - PARTIAL DECK PLAN - 3

1/4" = 1'-0"

NOTES:

1. FOR SIDEWALK DETAILS, SEE BRIDGE SHEET BG1.
2. FOR TYPICAL LIFT SPAN DECK CROSS SECTION, SEE BRIDGE SHEET B41.
3. PANEL POINT NUMBERS WITH A PRIME SYMBOL DESIGNATE PANELS LOCATED ON THE WEST FASCIA OF THE STRUCTURE.

LEGEND:

L (n)	INDICATES BOTTOM CHORD PANEL POINT
FB (n)	INDICATES FLOORBEAM NUMBER
LL (n)	INDICATES LOWER LATERAL PANEL POINT

80% Submission
January 10, 2012

ARCHER WESTERN CONTRACTORS

HNTB
HNTB Corporation
The HNTB Companies
Engineers Architects Planners

SUBDIRECTORY	.DGN LOCATOR	SHEET SCALE
	$FILENAME$	1/4" = 1'-0"

STATE OF NEW HAMPSHIRE
DEPARTMENT OF TRANSPORTATION * BUREAU OF BRIDGE DESIGN

TOWN PORTSMOUTH, NH. - KITTERY, ME. BRIDGE NO. 247 \ 084 STATE PROJECT 13678F

LOCATION U.S. ROUTE 1 OVER PISCATAQUA RIVER

LIFT SPAN - PARTIAL DECK PLAN 3 OF 3

REVISIONS AFTER PROPOSAL		BY	DATE		BY	DATE
	DESIGNED	CSE	09/11	CHECKED	TPZ	09/11
	DRAWN	SPL	09/11	CHECKED	GT	09/11
	QUANTITIES	XX	XX/XX	CHECKED	XX	XX/XX
	ISSUE DATE		FEDERAL PROJECT NO.		SHEET NO.	
	REV. DATE					

BRIDGE SHEET B53 OF
FILE NUMBER 107-1-1
TOTAL SHEETS

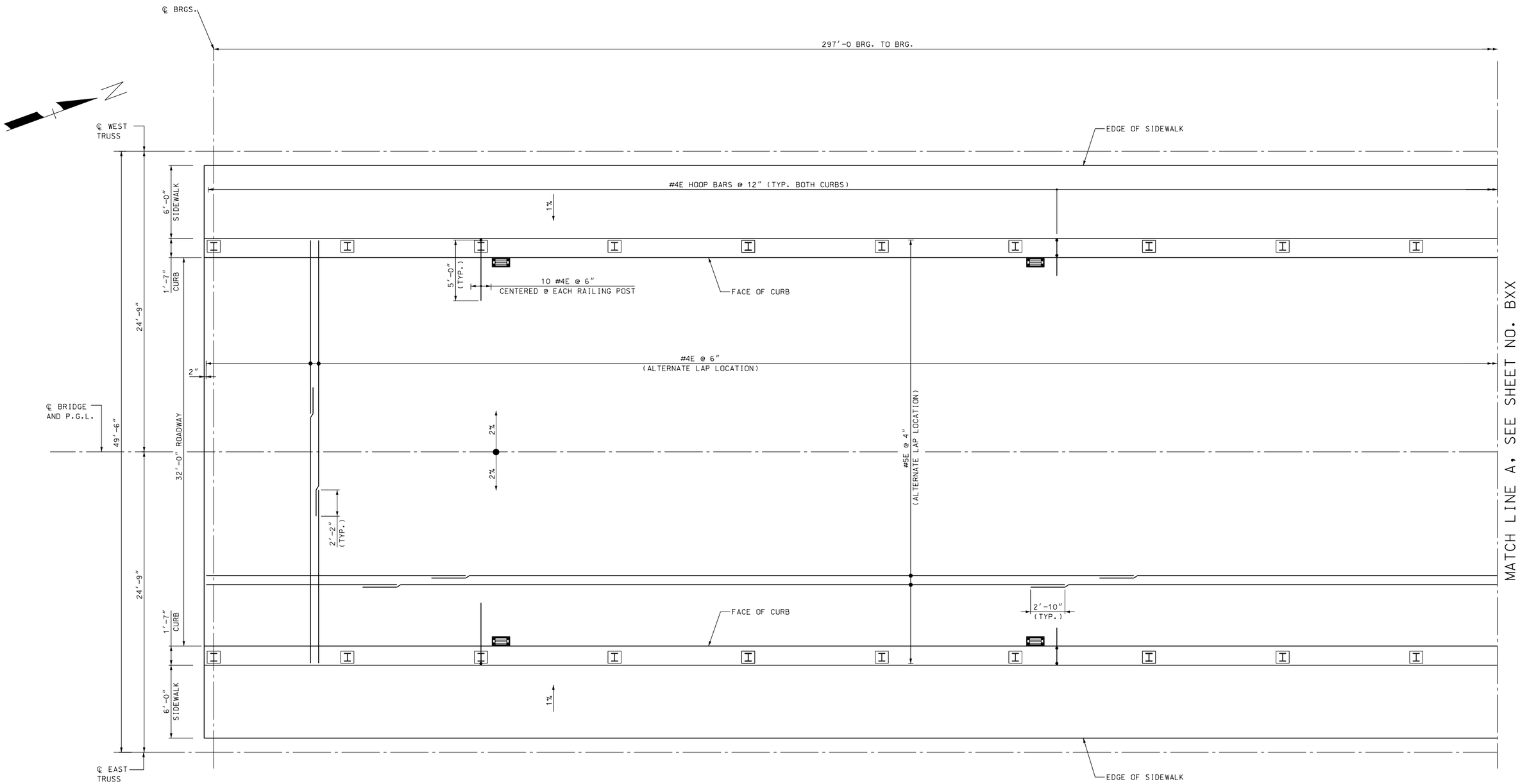

LIFT SPAN - PARTIAL REINFORCEMENT PLAN - 1

1/4" = 1'-0"

NOTES:

1. FOR DECK JOINT DETAILS SEE BRIDGE SHEET B55.
2. FOR SIDEWALK DETAILS, SEE BRIDGE SHEET BG1.

LEGEND:

L (n)	INDICATES BOTTOM CHORD PANEL POINT
FB (n)	INDICATES FLOORBEAM NUMBER
LL (n)	INDICATES LOWER LATERAL PANEL POINT

80% Submission
January 10, 2012

ARCHER WESTERN CONTRACTORS

HNTB
HNTB Corporation
The HNTB Companies
Engineers Architects Planners

SUBDIRECTORY	.DGN LOCATOR	SHEET SCALE
	$FILENAME$	1/4" = 1'-0"

STATE OF NEW HAMPSHIRE
DEPARTMENT OF TRANSPORTATION * BUREAU OF BRIDGE DESIGN

TOWN PORTSMOUTH, NH. - KITTERY, ME. BRIDGE NO. 247 \ 084 STATE PROJECT 13678F

LOCATION U.S. ROUTE 1 OVER PISCATAQUA RIVER

LIFT SPAN - PARTIAL REINFORCEMENT PLAN 1 OF 3

BRIDGE SHEET B53A OF

REVISIONS AFTER PROPOSAL		BY	DATE		BY	DATE
	DESIGNED	CSE	09/11	CHECKED	TPZ	09/11
	DRAWN	ELC	09/11	CHECKED	GT	09/11
	QUANTITIES	XX	XX/XX	CHECKED	XX	XX/XX
	ISSUE DATE					
	REV. DATE					

FEDERAL PROJECT NO. | SHEET NO. | TOTAL SHEETS

FILE NUMBER 107-1-1

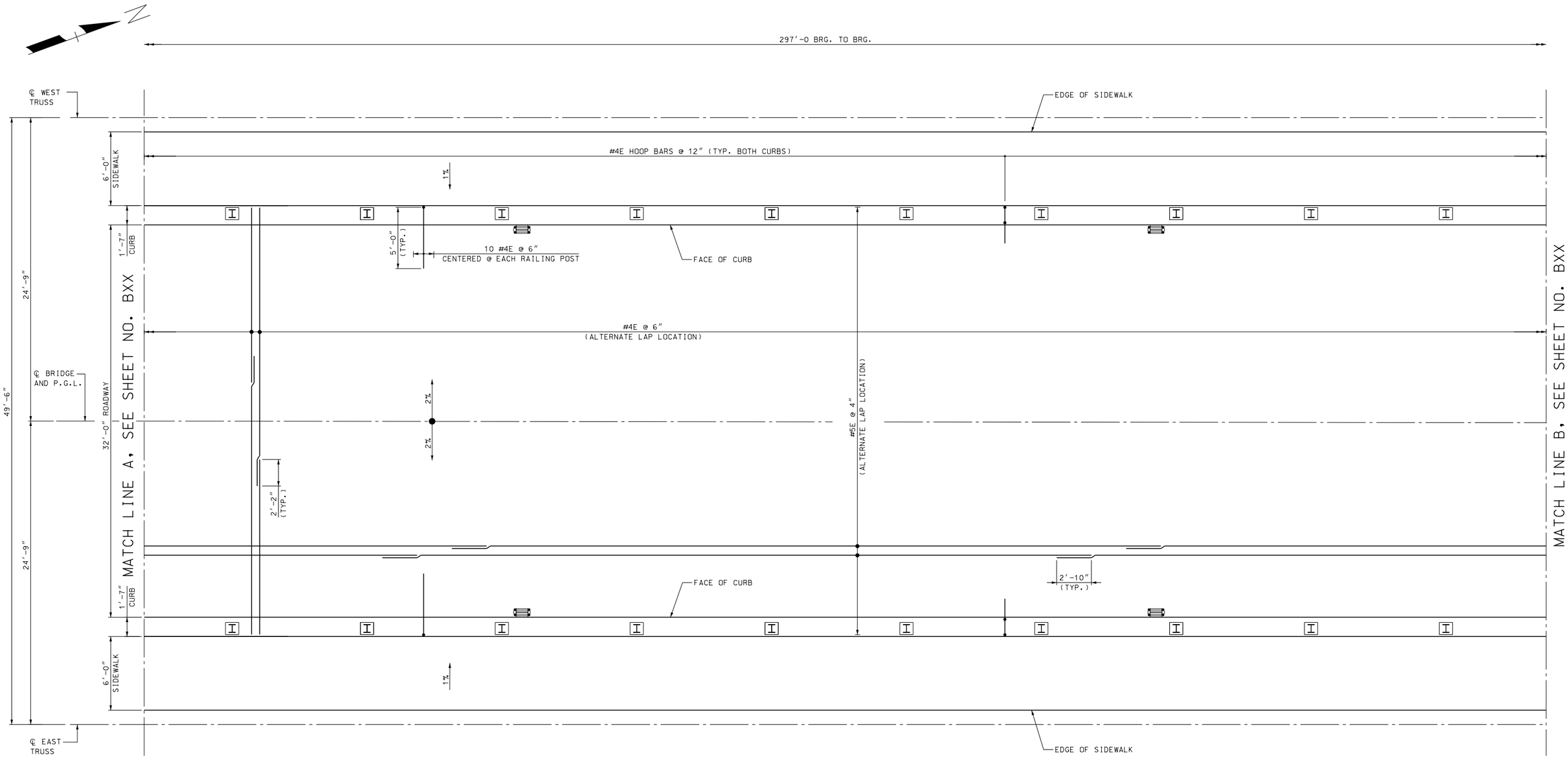

LIFT SPAN - PARTIAL REINFORCEMENT PLAN - 2

1/4" = 1'-0"

NOTES:

1. FOR SIDEWALK DETAILS, SEE BRIDGE SHEET BG1.
2. FOR TYPICAL LIFT SPAN DECK CROSS SECTION, SEE BRIDGE SHEET B41.

LEGEND:

L (n)	INDICATES BOTTOM CHORD PANEL POINT
FB (n)	INDICATES FLOORBEAM NUMBER
LL (n)	INDICATES LOWER LATERAL PANEL POINT

80% Submission
January 10, 2012

ARCHER WESTERN CONTRACTORS

HNTB
HNTB Corporation
The HNTB Companies
Engineers Architects Planners

SUBDIRECTORY	.DGN LOCATOR	SHEET SCALE
	$FILENAME$	1/4" = 1'-0"

STATE OF NEW HAMPSHIRE
DEPARTMENT OF TRANSPORTATION * BUREAU OF BRIDGE DESIGN

TOWN PORTSMOUTH, NH. - KITTERY, ME. BRIDGE NO. 247 \ 084 STATE PROJECT 13678F

LOCATION U.S. ROUTE 1 OVER PISCATAQUA RIVER

LIFT SPAN - PARTIAL REINFORCEMENT PLAN 2 OF 3

BRIDGE SHEET B53B[F]

FILE NUMBER 107-1-1

REVISIONS AFTER PROPOSAL		BY	DATE		BY	DATE
	DESIGNED	CSE	09/11	CHECKED	TPZ	09/11
	DRAWN	ELC	09/11	CHECKED	GT	09/11
	QUANTITIES	XX	XX/XX	CHECKED	XX	XX/XX
	ISSUE DATE		FEDERAL PROJECT NO.		SHEET NO.	TOTAL SHEETS
	REV. DATE					

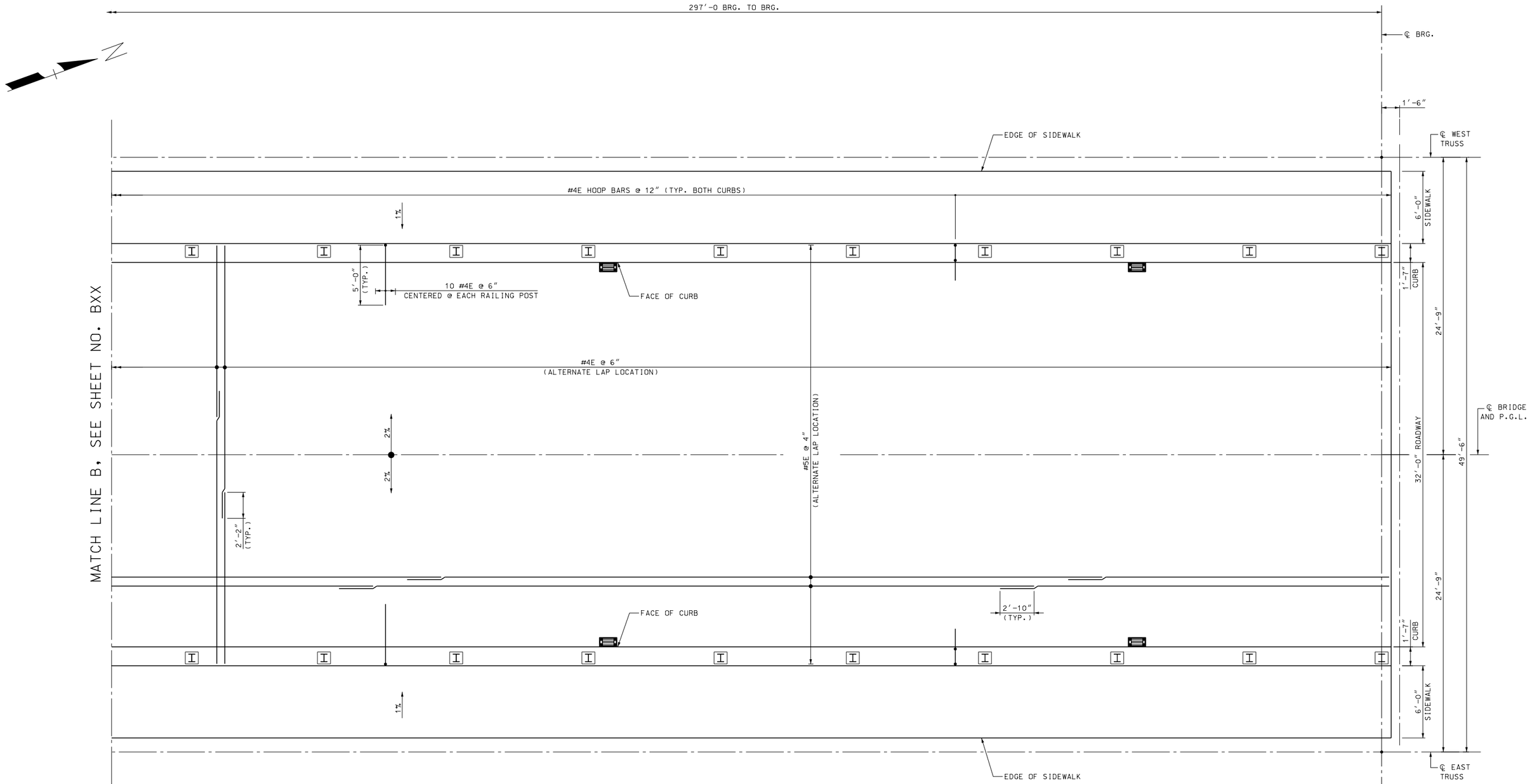

LIFT SPAN - PARTIAL REINFORCEMENT PLAN - 3

1/4" = 1'-0"

NOTES:

1. FOR SIDEWALK DETAILS, SEE BRIDGE SHEET BG1.
2. FOR TYPICAL LIFT SPAN DECK CROSS SECTION, SEE BRIDGE SHEET B41.

LEGEND:

L (n)	INDICATES BOTTOM CHORD PANEL POINT
FB (n)	INDICATES FLOORBEAM NUMBER
LL (n)	INDICATES LOWER LATERAL PANEL POINT

80% Submission
January 10, 2012

ARCHER WESTERN CONTRACTORS

HNTB
HNTB Corporation
The HNTB Companies
Engineers Architects Planners

SUBDIRECTORY	.DGN LOCATOR	SHEET SCALE
	$FILENAME$	1/4" = 1'-0"

STATE OF NEW HAMPSHIRE
DEPARTMENT OF TRANSPORTATION * BUREAU OF BRIDGE DESIGN

TOWN PORTSMOUTH, NH. - KITTERY, ME. BRIDGE NO. 247 \ 084 STATE PROJECT 13678F

LOCATION U.S. ROUTE 1 OVER PISCATAQUA RIVER

LIFT SPAN - PARTIAL REINFORCEMENT PLAN 3 OF 3

BRIDGE SHEET B53C of F

REVISIONS AFTER PROPOSAL	BY	DATE		BY	DATE
DESIGNED	CSE	09/11	CHECKED	TPZ	09/11
DRAWN	ELC	09/11	CHECKED	GT	09/11
QUANTITIES	XX	XX/XX	CHECKED	XX	XX/XX
ISSUE DATE			FEDERAL PROJECT NO.	SHEET NO.	
REV. DATE					

FILE NUMBER 107-1-1

TOTAL SHEETS

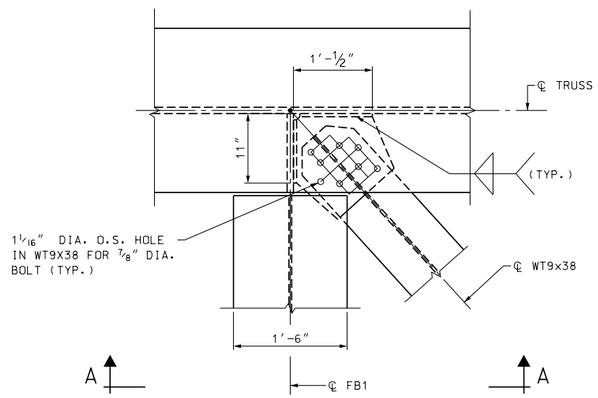

DETAIL 1
1"= 1'-0"

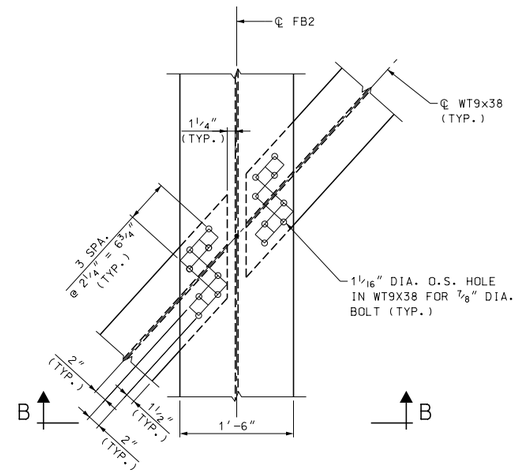

DETAIL 2
1"= 1'-0"

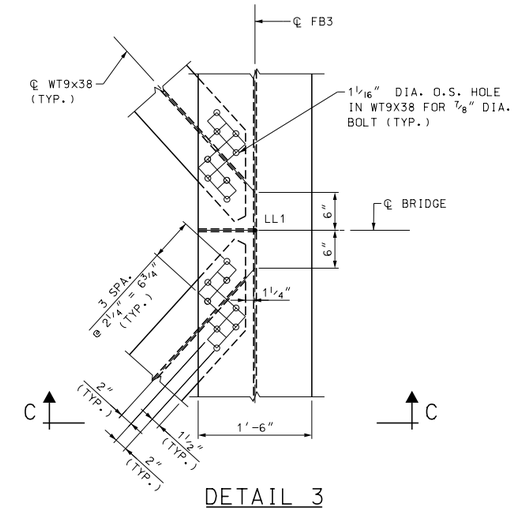

DETAIL 3
1"= 1'-0"

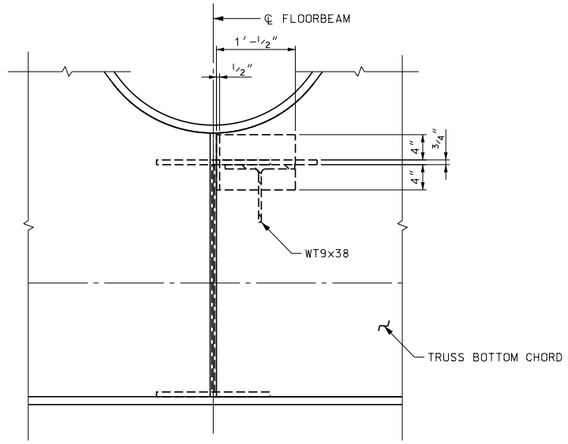

SECTION A-A
1"= 1'-0"

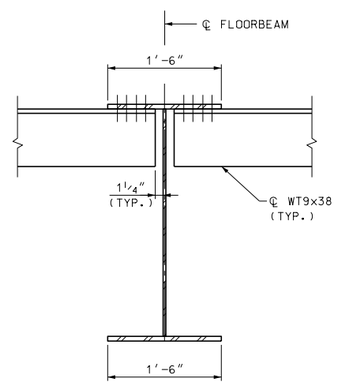

SECTION B-B
1"= 1'-0"

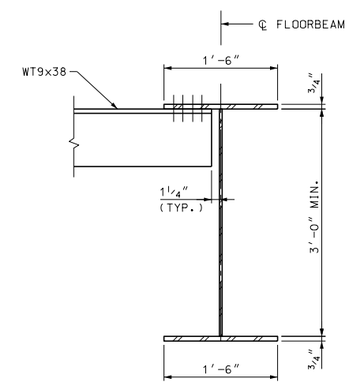

SECTION C-C
1"= 1'-0"

NOTES:

1. ALL STRUCTURAL STEEL AND CONNECTION PLATES SHALL BE AASHTO M270 GRADE 50 UNLESS NOTED OTHERWISE.

2. ALL BOLTS SHALL BE 7/8" DIA. HIGH STRENGTH ASTM A325 AND SHALL BE GALVANIZED PER THE REQUIREMENTS OF ASTM A153. NUTS AND WASHERS SHALL BE A563 AND F43G RESPECTIVELY, AND SHALL BE GALVANIZED PER REQUIREMENTS OF ASTM A153. ALL HOLES FOR 7/8" DIA. BOLTS SHALL BE 15/16" DIA. UNLESS NOTED OTHERWISE.

3. FOR DETAILS 1 THRU 3, SEE BRIDGE SHEET B51.

LEGEND:

L(n) INDICATES BOTTOM CHORD PANEL POINT

FB(n) INDICATES FLOORBEAM NUMBER

80% Submission
January 10, 2012

ARCHER WESTERN CONTRACTORS

HNTB
HNTB Corporation
The HNTB Companies
Engineers Architects Planners

SUBDIRECTORY	.DGN LOCATOR	SHEET SCALE
	$FILENAME$	1" = 1'-0"

STATE OF NEW HAMPSHIRE
DEPARTMENT OF TRANSPORTATION * BUREAU OF BRIDGE DESIGN

TOWN PORTSMOUTH, NH. - KITTERY, ME. BRIDGE NO. 247 \ 084 STATE PROJECT 13678F

LOCATION U.S. ROUTE 1 OVER PISCATAQUA RIVER

LIFT SPAN - LOWER LATERAL CONNECTION DETAILS

REVISIONS AFTER PROPOSAL		BY	DATE		BY	DATE
	DESIGNED	JN	09/11	CHECKED	TPZ	09/11
	DRAWN	PRE	09/11	CHECKED	GT	09/11
	QUANTITIES	XX	XX/XX	CHECKED	XX	XX/XX
	ISSUE DATE		FEDERAL PROJECT NO.		SHEET NO.	
	REV. DATE					

BRIDGE SHEET B54 OF

FILE NUMBER 107-1-1

TOTAL SHEETS

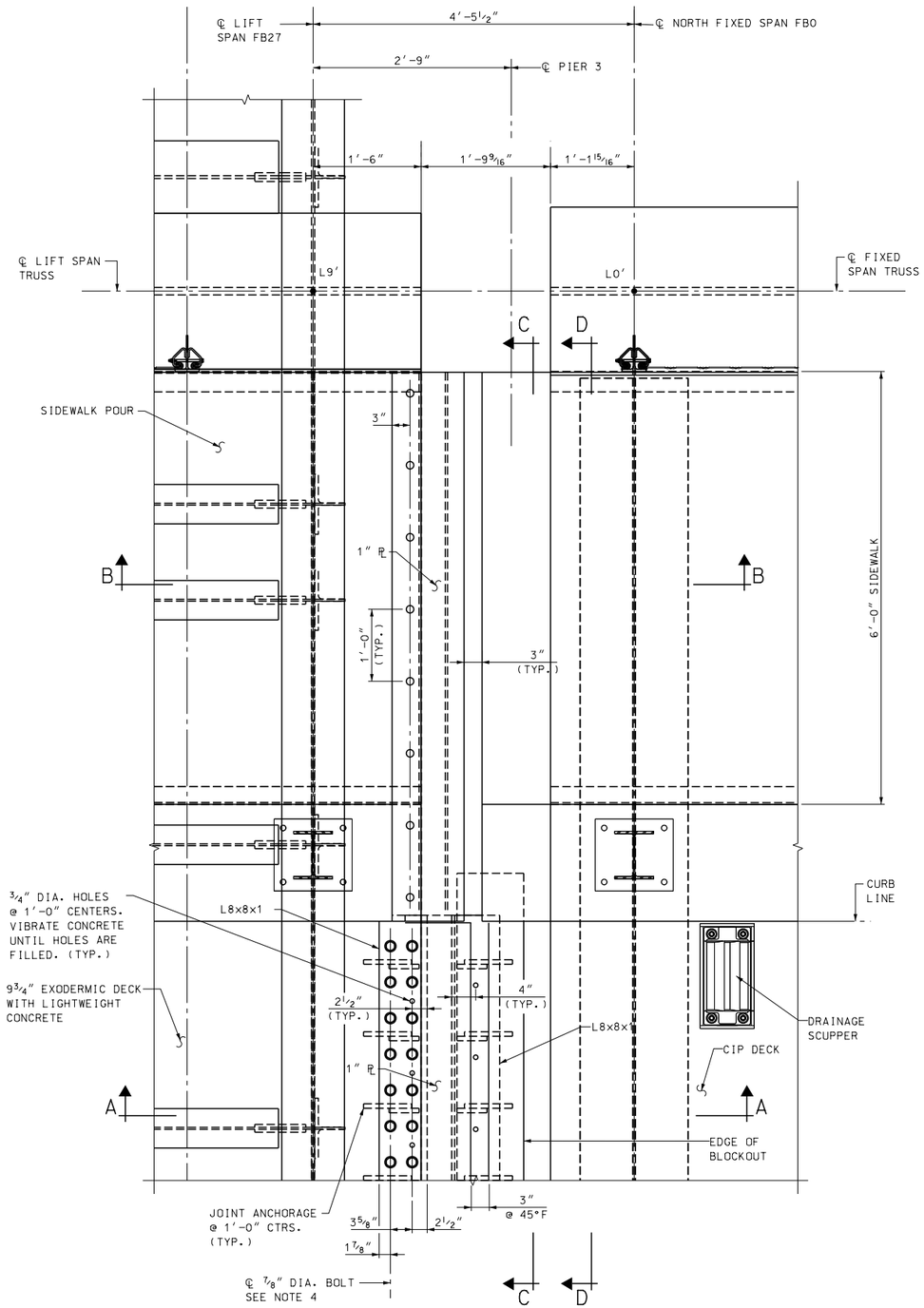

PARTIAL PLAN – ARMORED DECK JOINT AT PIER 3

(ARMORED DECK JOINT AT PIER 2 OPPOSITE HAND)

1″ = 1′-0″

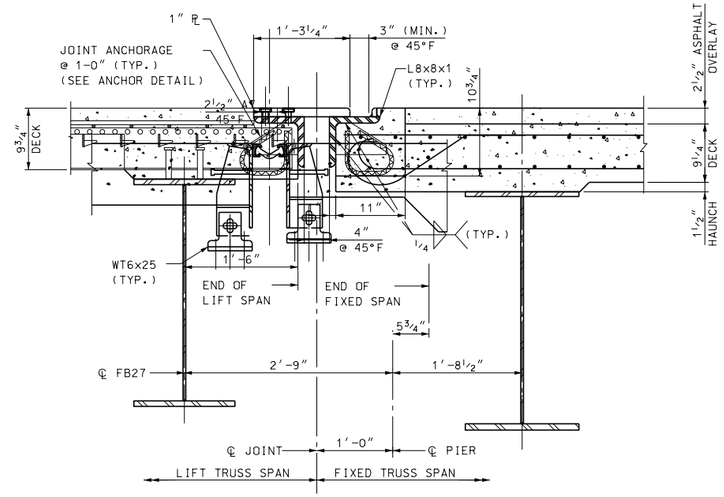

SECTION A–A

(JOINT AT PIER 3 SHOWN; JOINT AT PIER 2 OPPOSITE HAND)

1″ = 1′-0″

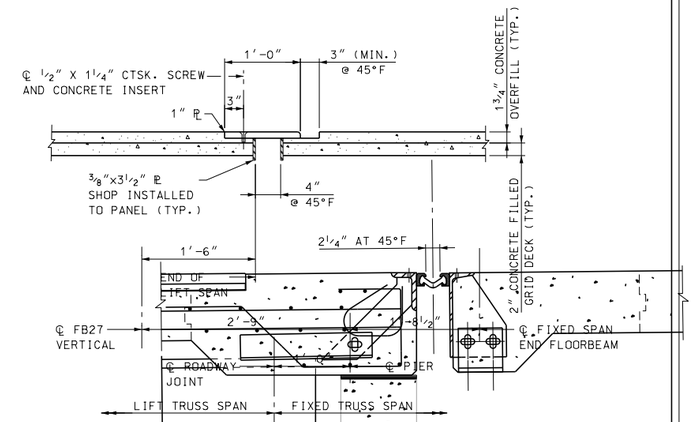

SECTION B–B

(JOINT AT PIER 3 SHOWN; JOINT AT PIER 2 OPPOSITE HAND)

1″ = 1′-0″

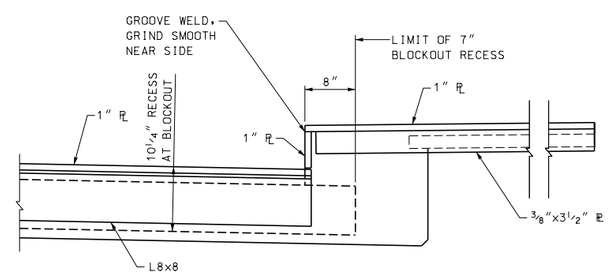

SECTION C–C

1″ = 1′-0″

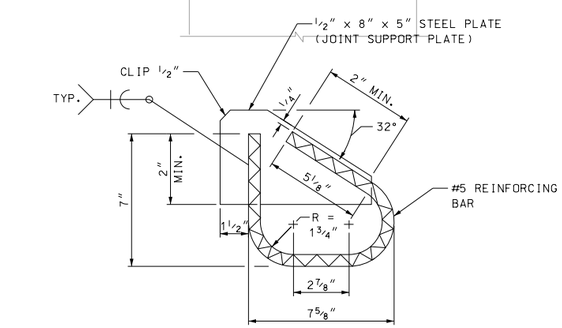

ANCHOR DETAIL

3″ = 1′-0″

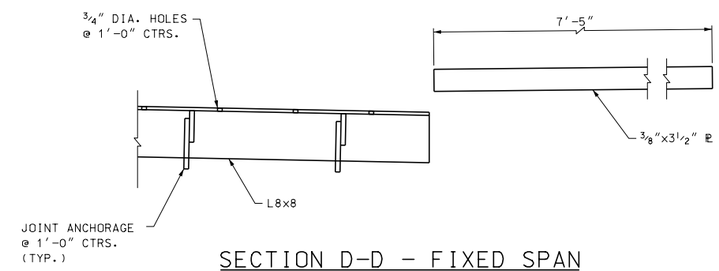

SECTION D–D – FIXED SPAN

(ONLY THE STEEL SHOWN)

1″ = 1′-0″

NOTES:

1. THE ARMORED DECK JOINT SHALL BE PAID FOR UNDER ITEM XXX.XXX.
2. ALL STRUCTURAL STEEL FOR DECK JOINT SHALL CONFORM TO ASTM A709 GRADE 50 AND GALVANIZED.
3. JOINT SUPPORT PLATES SHALL BE SHOP WELDED TO THE EXPANSION JOINT STEEL AND SHALL BE VERTICAL AFTER THE JOINT ASSEMBLY HAS BEEN ADJUSTED FOR ROADWAY CROSS-SLOPE AND GRADE.
4. HOLES IN JOINT SUPPORT ANGLE FOR BRIDGING PLATE SHALL BE TAPPED FOR ⅞″ DIA. H.S. BOLTS.

80% Submission
January 10, 2012

ARCHER WESTERN CONTRACTORS

HNTB
HNTB Corporation
The HNTB Companies
Engineers Architects Planners

STATE OF NEW HAMPSHIRE
DEPARTMENT OF TRANSPORTATION * BUREAU OF BRIDGE DESIGN

TOWN PORTSMOUTH, NH. - KITTERY, ME. BRIDGE NO. 247 \ 084 STATE PROJECT 13678F

LOCATION U.S. ROUTE 1 OVER PISCATAQUA RIVER

LIFT SPAN - ARMORED DECK JOINT

REVISIONS AFTER PROPOSAL		BY	DATE		BY	DATE
	DESIGNED	CB	12/11	CHECKED	GT	12/11
	DRAWN	CB	12/11	CHECKED	TPZ	12/11
	QUANTITIES	XX	XX/XX	CHECKED	XX	XX/XX
	ISSUE DATE		FEDERAL PROJECT NO.		SHEET NO.	
	REV. DATE					

BRIDGE SHEET B55 OF

FILE NUMBER 107-1-1

TOTAL SHEETS

SUBDIRECTORY	.DGN LOCATOR	SHEET SCALE
	$FILENAME$	1" = 1'-0"

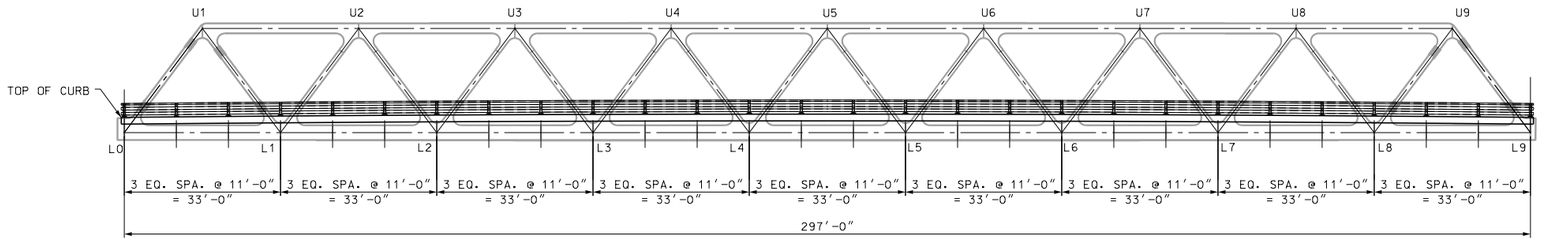

TYPICAL TRUSS SPAN - EAST ELEVATION

(WEST ELEVATION SIMILAR)

1/16" = 1'-0"

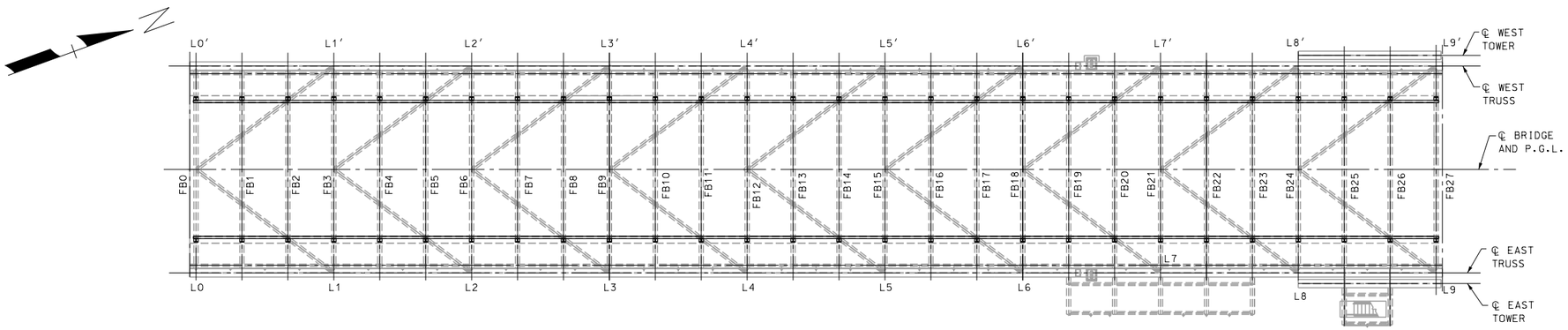

SOUTH FIXED SPAN DECK PLAN

(NORTH FIXED SPAN DIAGONALLY SYM.)

1/16" = 1'-0"

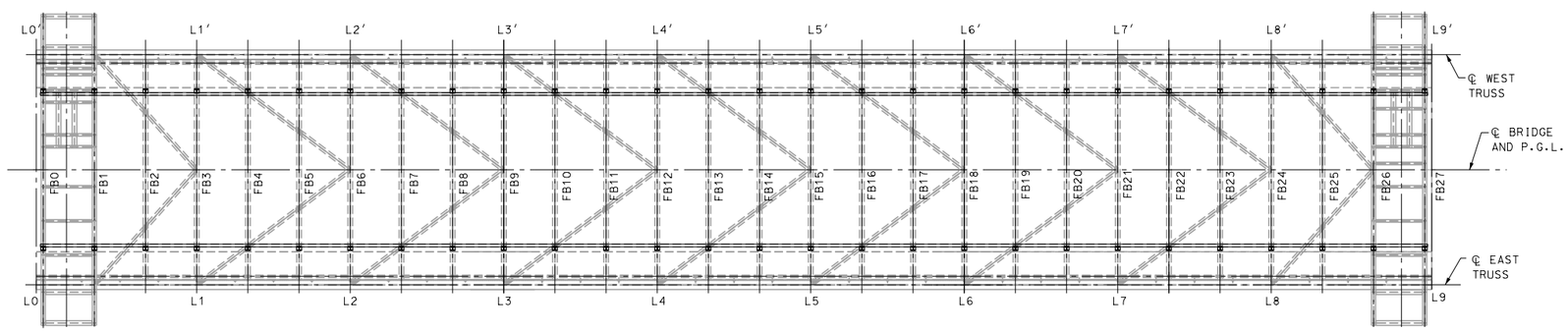

LIFT SPAN DECK PLAN

1/16" = 1'-0"

LEGEND:

U(n)	INDICATE TOP CHORD PANEL POINT
L(n)	INDICATE BOTTOM CHORD PANEL POINT
FB(n)	INDICATE FLOORBEAM PANEL POINT

NOTES:

1. PANEL POINT NUMBERS WITH A PRIME SYMBOL DESIGNATE PANELS LOCATED ON THE WEST FASCIA OF THE STRUCTURE.
2. FOR SOUTH FIXED SPAN FRAMING PLAN AND NORTH FIXED SPAN FRAMING PLAN, SEE BRIDGE SHEETS B13 AND B14 RESPECTIVELY.
3. FOR LIFT SPAN FRAMING PLAN, SEE BRIDGE SHEETS B40.
4. FOR BRIDGE RAILING DETAILS, SEE BRIDGE SHEET B59.

80% Submission
January 10, 2012

ARCHER WESTERN CONTRACTORS

HNTB
HNTB Corporation
The HNTB Companies
Engineers Architects Planners

SUBDIRECTORY	.DGN LOCATOR	SHEET SCALE
	$FILENAME$	1" = 1'-0"

STATE OF NEW HAMPSHIRE
DEPARTMENT OF TRANSPORTATION * BUREAU OF BRIDGE DESIGN

TOWN PORTSMOUTH, NH. - KITTERY, ME. BRIDGE NO. 247 \ 084 STATE PROJECT 13678F

LOCATION U.S. ROUTE 1 OVER PISCATAQUA RIVER

BRIDGE RAILING PLAN AND ELEVATION

REVISIONS AFTER PROPOSAL	BY	DATE		BY	DATE
DESIGNED	CSE	09/11	CHECKED	TPZ	09/11
DRAWN	SPL	09/11	CHECKED	GT	09/11
QUANTITIES	XX	XX/XX	CHECKED	XX	XX/XX

ISSUE DATE
REV. DATE
FEDERAL PROJECT NO.
SHEET NO.

BRIDGE SHEET B58 OF
FILE NUMBER 107-1-1
TOTAL SHEETS

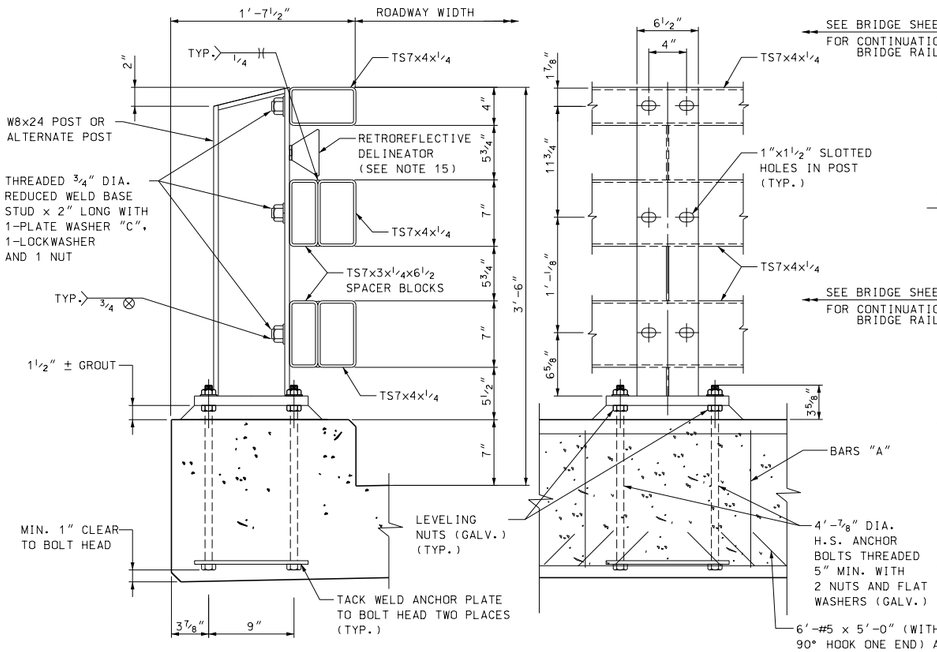

CURB AND POST DETAILS

1½" = 1'-0"

NOTE:
SET TOP OF POST 3'-6" ABOVE FINISH GRADE.

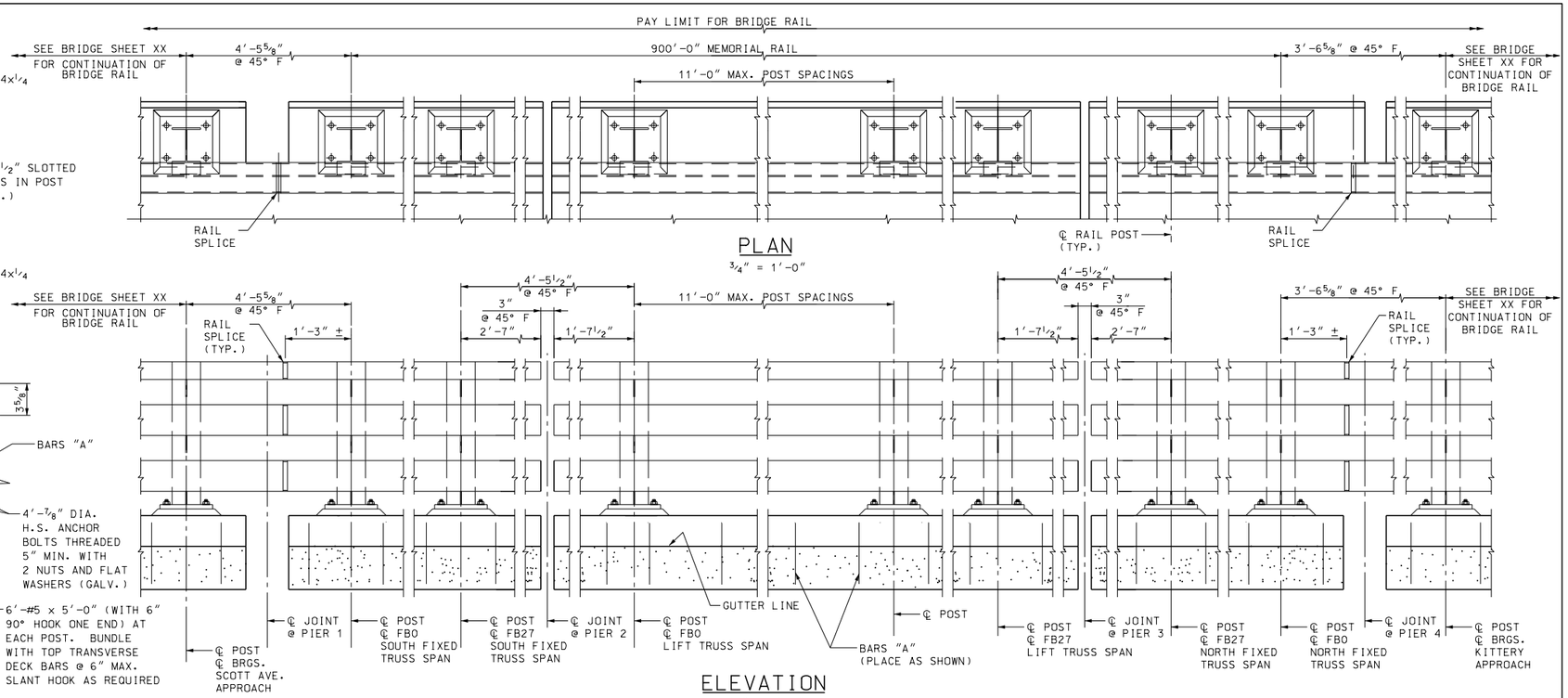

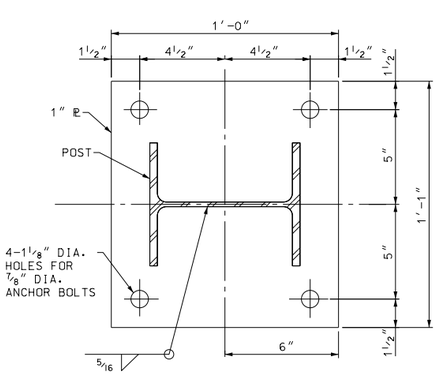

BASE PLATE DETAILS

3" = 1'-0"

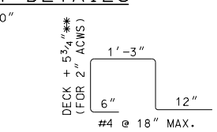

BAR "A"

N.T.S.

NOTE:
DIMENSION MARKED THUS ✱✱ WILL VARY WITH DEPTH OF ACWS.

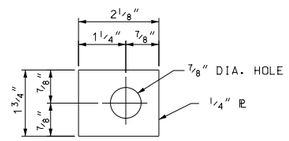

PLATE WASHER - "C"

6" = 1'-0"

RAIL NOTES:

1. ITEM 5G3.XXXX, BRIDGE RAIL, SHALL INCLUDE POSTS, BASE PLATES, ANCHOR PLATES, ANCHOR RODS, RAIL ASSEMBLY BOLTS, NUTS, WASHERS, STUDS, STRUCTURAL TUBING, SPLICE BARS, PIPE SPACERS, ALL APPURTENANCES, AND GALVANIZING.
2. BRIDGE RAIL POSTS SHALL BE SET NORMAL (90 DEGREES) TO THE PROFILE GRADE.
3. ENDS OF RAIL TUBE SECTIONS SHALL BE SAWED OR MILLED AND SHALL BE TRUE AND SMOOTH. ALL CUT EDGES OF ALL MATERIAL SHALL BE GROUND SMOOTH.
4. EACH PIECE OF RAIL TUBING SHALL BE ATTACHED TO A MINIMUM OF THREE (3) POSTS.
5. BOLT HOLES SHALL BE DRILLED OR PUNCHED. FLAME CUTTING MAY BE USED TO FINISH SLOTTED HOLES IF MECHANICALLY GUIDED.
6. MILL OR SHOP TRANSVERSE WELDS SHALL NOT BE PERMITTED ON ANY RAIL ELEMENT. RAIL ELEMENTS USED ON CURVES SHALL USE ⅜" WALL TUBES AND SHALL BE SHOP FORMED TO THE REQUIRED CURVATURE.
7. NO PUNCHING, DRILLING, CUTTING OR WELDING SHALL BE PERMITTED AFTER GALVANIZING, AND FOR INSTALLATION OF DELINEATORS. DAMAGED AREAS OF GALVANIZING SHALL BE THOROUGHLY CLEANED, PRETREATED, AND PAINTED WITH TWO COATS OF ORGANIC ZINC-RICH GALVANIZING REPAIR PAINT, HAVING A MINIMUM 94% ZINC BY WEIGHT, TO A THICKNESS EQUAL TO THE ORIGINAL COATING ACCORDING TO THE STANDARD SPECIFICATIONS AND ASTM A780.
8. NUTS FOR THREADED ANCHOR RODS CONNECTING THE BASE PLATE TO THE CONCRETE SHALL BE TIGHTENED TO A SNUG FIT AND GIVEN AN ADDITIONAL ⅛ TURN.
9. THREADS FOR ANCHOR RODS MAY BE ROLLED OR CUT. IF CUT THREADS ARE USED, BOLT DIAMETER SHALL NOT BE LESS THAN NOMINAL DIAMETER. IF ROLLED THREADS ARE USED, ROD DIAMETER SHALL NOT BE LESS THAN ROOT DIAMETER OF THREADS.

MATERIAL NOTES:

10. STRUCTURAL TUBING SHALL CONFORM TO THE REQUIREMENTS OF ASTM A500, GRADE B, STRUCTURAL STEEL TUBING. RAIL TUBING SHALL MEET THE LONGITUDINAL CHARPY V-NOTCH REQUIREMENTS OF 15 FT. LBS. AT 0°F. FOR ASTM A500, GRADE B, THE TEST SAMPLES SHALL BE TAKEN AFTER FORMING THE TUBES. CHARPY V-NOTCH IS NOT REQUIRED FOR SPLICE TUBES.
11. RAIL POST AND BASE PLATES SHALL CONFORM TO THE REQUIREMENTS OF ASTM A572 GR 50, EXCEPT ANCHOR PLATES MAY BE ASTM A36.
12. THREADED STUDS AND MATCHING NUTS FOR RAIL-TO-POST ATTACHMENT SHALL CONFORM TO ASTM A276 TYPE 304, STAINLESS STEEL, AND SHALL BE TORQUE TESTED PER AWS D1.5, 7.7.1. ALL OTHER BOLTS AND NUTS SHALL CONFORM TO ASTM A307 AND ASTM A563 GRADE A RESPECTIVELY OR BETTER, EXCEPT THAT ASTM A307 NUTS MAY BE USED ON THE BOTTOM OF ANCHOR ASSEMBLY. WASHERS SHALL BE HARDENED STEEL COMMERCIAL TYPE A PLAIN WIDE WASHERS AND SHALL MEET THE DIMENSIONAL REQUIREMENTS OF A.N.S.I. B18.22. ANCHOR RODS SHALL CONFORM TO ASTM A449.
13. ALL STEEL COMPONENTS (EXCEPT STAINLESS) SHALL BE GALVANIZED AFTER FABRICATION IN CONFORMANCE TO AASHTO M232 (ASTM A153) AND AASHTO M111 (ASTM A123). THE GALVANIZING KETTLE SHALL HAVE 0.05 TO 0.09 PERCENT NICKEL. GALVANIZED SURFACES SHALL HAVE A UNIFORM APPEARANCE AND GALVANIZED MATERIAL SHALL BE PROPERLY STORED. IF PAINTING IS REQUIRED SEE SPECIAL PROVISIONS FOR 708.
14. STUDS SHALL BE WELDED ON AFTER TUBES ARE GALVANIZED BY SPOT GRINDING OFF GALVANIZING, WELDING ON STUDS, THEN TOUCH UP GALVANING PER NOTE #7 ABOVE.
15. RETROREFLECTIVE DELINEATORS, BOLTS, NUTS, WASHERS AND FIELD DRILLING OF POSTS, INCLUDING GALVANIZING TOUCH-UP, SHALL BE SUBSIDIARY TO ITEM XXX. SEE STANDARD PLANS FOR ROAD AND BRIDGE CONSTRUCTION (DL-1) FOR ADDITIONAL DETAILS AND SPACING.

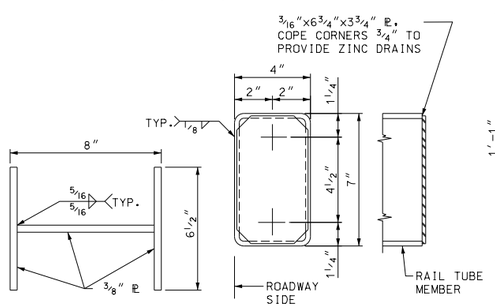

ALTERNATE POST

3" = 1'-0"

RAIL CAP DETAILS

3" = 1'-0"

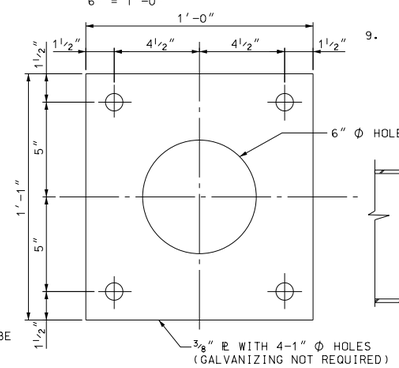

CURB AND POST DETAILS

3" = 1'-0"

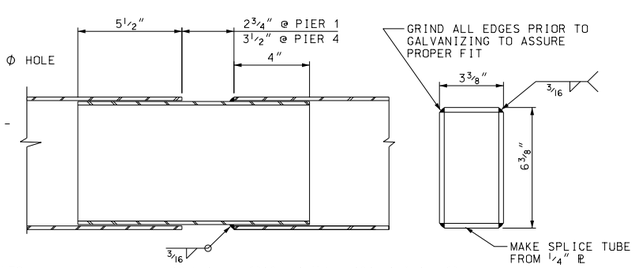

RAIL SPLICE DETAILS

3" = 1'-0"

RAILING WEIGHT
WGT. = 2.014 KIP/POST (INCLUDES 7" NORMAL WEIGHT CONCRETE CURB)
CENTER OF GRAVITY = 0.908 FT

80% Submission
January 10, 2012

ARCHER WESTERN CONTRACTORS

HNTB
HNTB Corporation
The HNTB Companies
Engineers Architects Planners

SUBDIRECTORY	.DGN LOCATOR	SHEET SCALE
	$FILENAME$	AS NOTED

STATE OF NEW HAMPSHIRE
DEPARTMENT OF TRANSPORTATION * BUREAU OF BRIDGE DESIGN

TOWN PORTSMOUTH, NH. - KITTERY, ME. BRIDGE NO. 247\084 STATE PROJECT 13678F

LOCATION U.S. ROUTE 1 OVER PISCATAQUA RIVER

BRIDGE RAIL DETAILS

REVISIONS AFTER PROPOSAL		BY	DATE		BY	DATE
	DESIGNED	CSE	09/11	CHECKED	TPZ	09/11
	DRAWN	SPL	09/11	CHECKED	GT	09/11
	QUANTITIES	XX	XX/XX	CHECKED	XX	XX/XX
	ISSUE DATE		FEDERAL PROJECT NO.		SHEET NO.	
	REV. DATE					

BRIDGE SHEET B59 OF
FILE NUMBER 107-1-1
TOTAL SHEETS

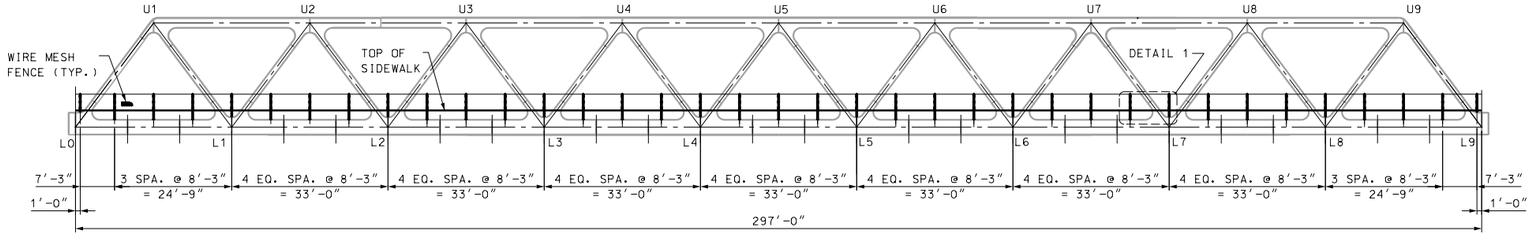

FIXED TRUSS SPAN – EAST ELEVATION

(WEST ELEVATION SIMILAR)
1/16" = 1'-0"

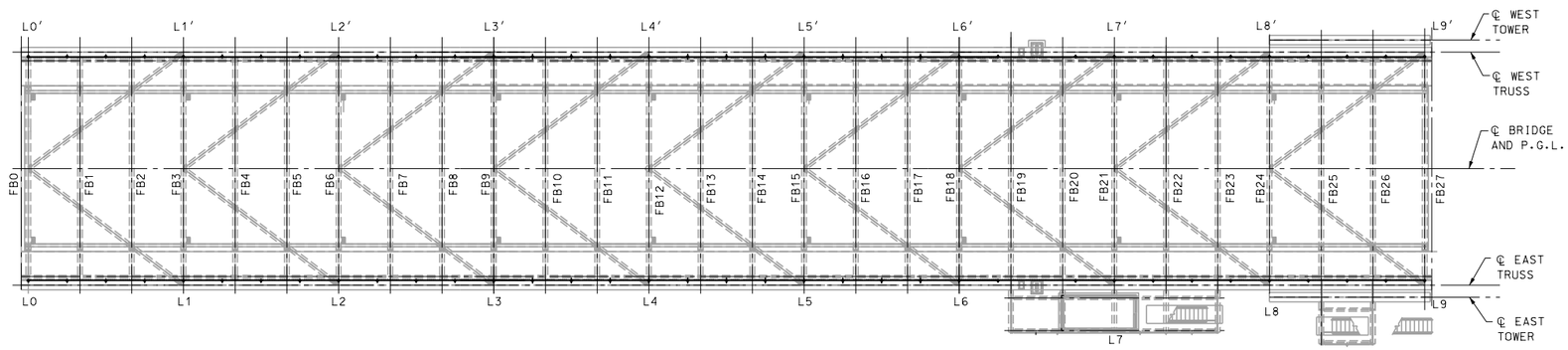

SOUTH FIXED SPAN DECK PLAN

(NORTH FIXED SPAN DIAGONALLY SYM.)
1/16" = 1'-0"

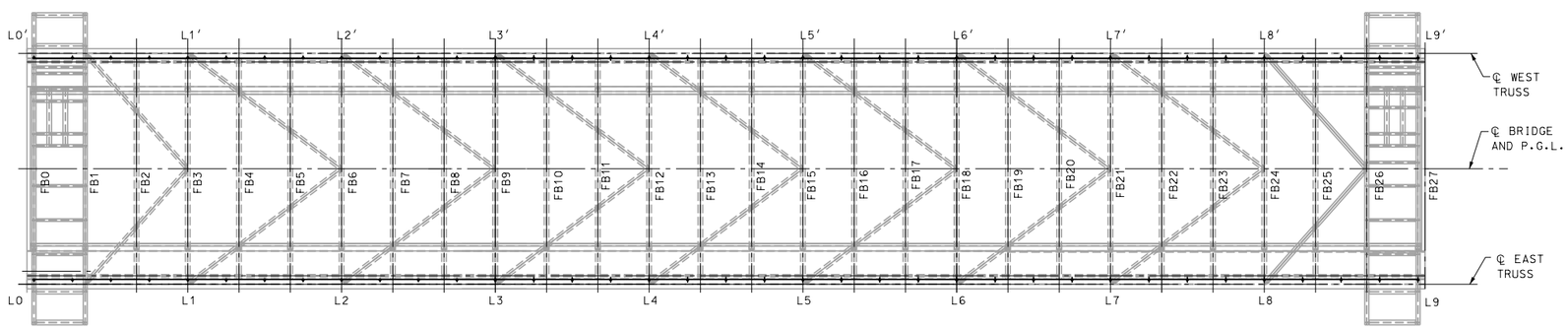

LIFT SPAN DECK PLAN

1/16" = 1'-0"

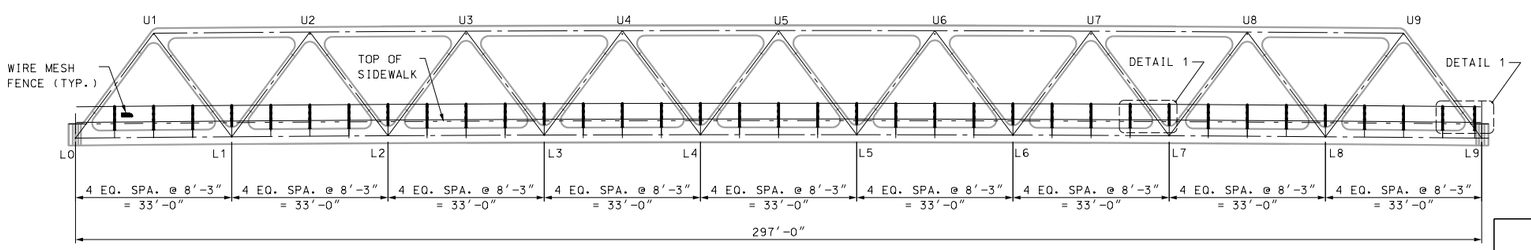

LIFT TRUSS SPAN – EAST ELEVATION

(WEST ELEVATION SIMILAR)
1/16" = 1'-0"

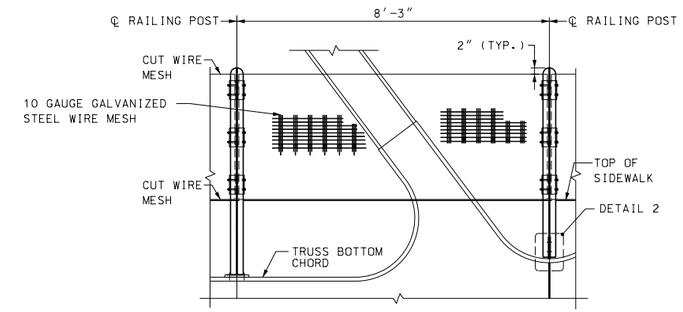

DETAIL 1

1/2" = 1'-0"

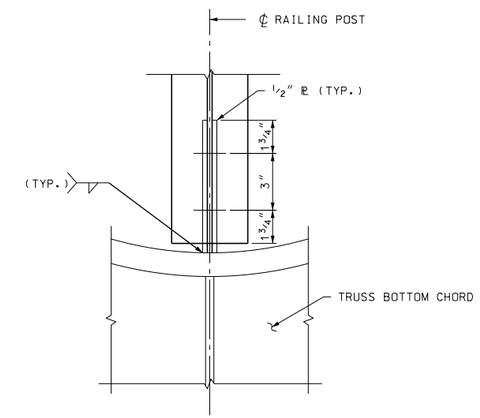

DETAIL 2

1/2" = 1'-0"

LEGEND:

U(n) INDICATE TOP CHORD PANEL POINT
L(n) INDICATE BOTTOM CHORD PANEL POINT
FB(n) INDICATE FLOORBEAM PANEL POINT

NOTES:

1. PANEL POINT NUMBERS WITH A PRIME SYMBOL DESIGNATE PANELS LOCATED ON THE WEST FASCIA OF THE STRUCTURE.
2. FOR SOUTH FIXED SPAN FRAMING PLAN AND NORTH FIXED SPAN FRAMING PLAN, SEE BRIDGE SHEETS B13 AND B14 RESPECTIVELY.
3. FOR LIFT SPAN FRAMING PLAN, SEE BRIDGE SHEETS B40.
4. FOR BRIDGE RAILING DETAILS, SEE BRIDGE SHEET B59.
5. FOR PEDESTRIAN RAILING DETAILS, SEE BRIDGE SHEET B61.

80% Submission
January 10, 2012

ARCHER WESTERN CONTRACTORS

HNTB
HNTB Corporation
The HNTB Companies
Engineers Architects Planners

SUBDIRECTORY	.DGN LOCATOR	SHEET SCALE
	$FILENAME$	1" = 10'-0"

STATE OF NEW HAMPSHIRE
DEPARTMENT OF TRANSPORTATION * BUREAU OF BRIDGE DESIGN

TOWN PORTSMOUTH, NH. - KITTERY, ME. BRIDGE NO. 247 \ 084 STATE PROJECT 13678F

LOCATION U.S. ROUTE 1 OVER PISCATAQUA RIVER

BRIDGE PEDESTRIAN RAILING PLAN AND ELEVATION

BRIDGE SHEET B60 OF

FILE NUMBER 107-1-1

REVISIONS AFTER PROPOSAL		BY	DATE		BY	DATE
	DESIGNED	CB	09/11	CHECKED	TPZ	09/11
	DRAWN	SPL	09/11	CHECKED	GT	09/11
	QUANTITIES	XX	XX/XX	CHECKED	XX	XX/XX

ISSUE DATE | FEDERAL PROJECT NO. | SHEET NO. | TOTAL SHEETS
REV. DATE

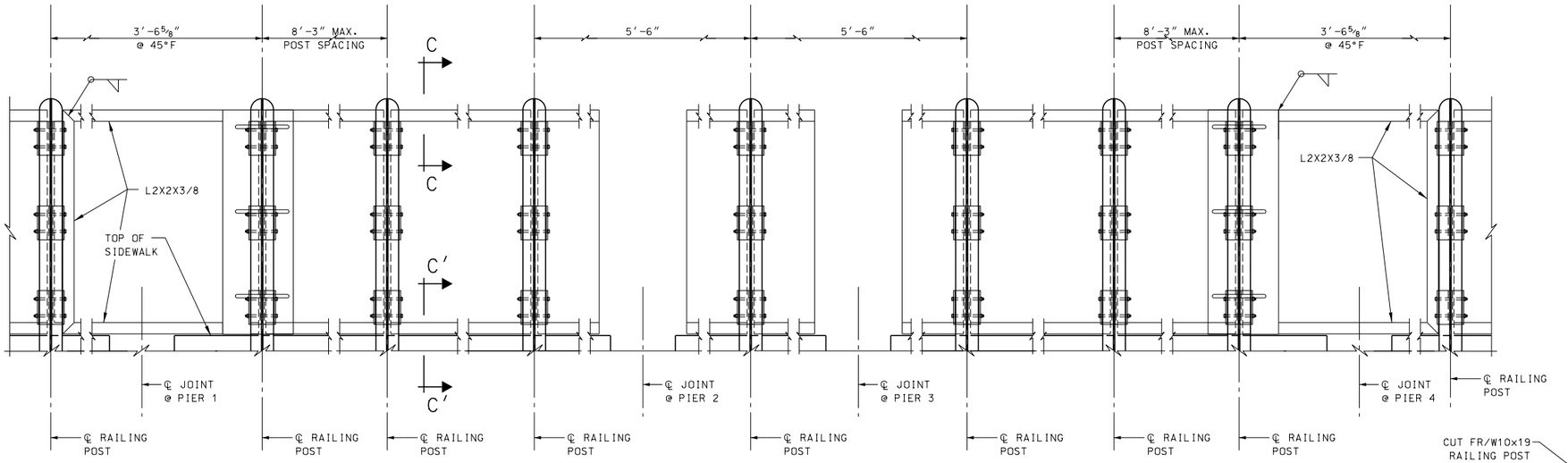

PANEL FRONT ELEVATION AT EXPANSION JOINT PEDESTRIAN RAILING

1" = 1'-0"

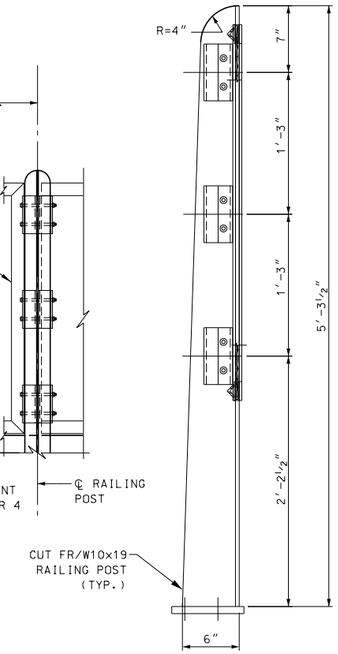

RAILING POST GEOMETRY

1 1/2"= 1'-0"

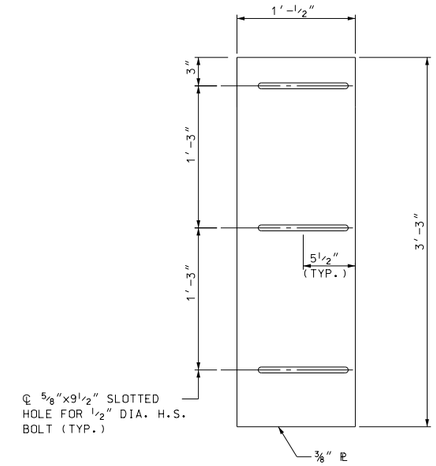

EXPANSION PLATE DETAIL PIERS 1 AND 4 ABUTMENT JOINT

1 1/2"= 1'-0"

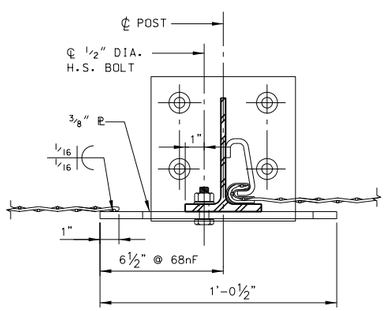

EXPANSION SPLICE DETAIL PIER 1 AND 4 JOINT

3"= 1'-0"

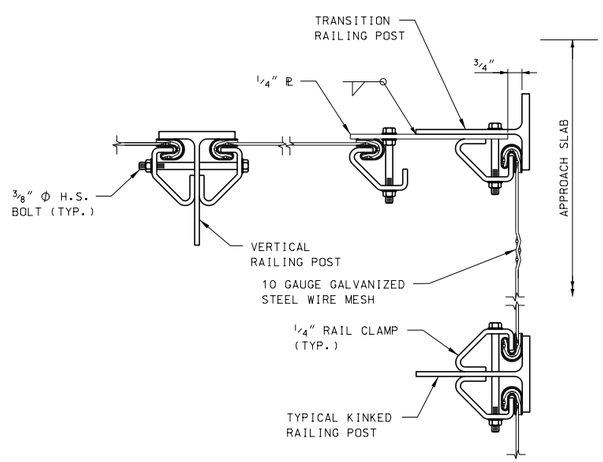

PEDESTRIAN RAIL BEND

N.T.S.

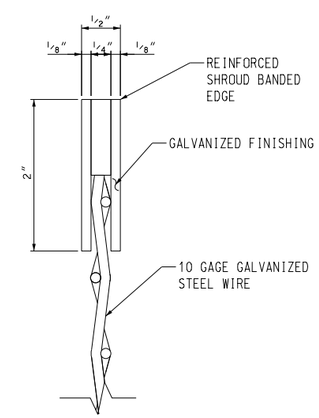

SECTION C-C

N.T.S.

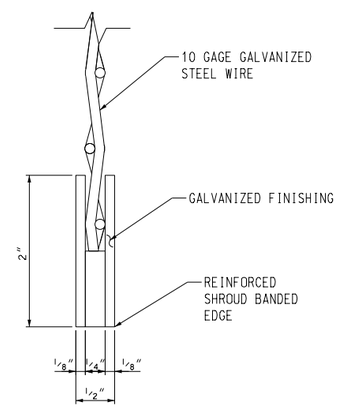

SECTION C'-C'

N.T.S.

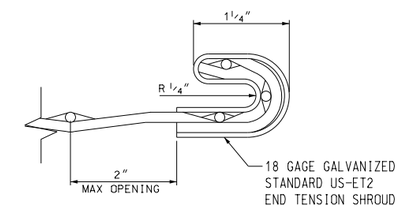

END SHROUD DETAIL

N.T.S.

NOTES:

1. FOR NOTES AND ADDITIONAL DETAILS, SEE BRIDGE SHEETS BG0 AND BG1.

80% Submission
January 10, 2012

ARCHER WESTERN CONTRACTORS

HNTB
HNTB Corporation
The HNTB Companies
Engineers Architects Planners

SUBDIRECTORY	.DGN LOCATOR	SHEET SCALE
	$FILENAME$	AS NOTED

STATE OF NEW HAMPSHIRE
DEPARTMENT OF TRANSPORTATION * BUREAU OF BRIDGE DESIGN

TOWN PORTSMOUTH, NH. - KITTERY, ME. BRIDGE NO. 247 \ 084 STATE PROJECT 13678F

LOCATION U.S. ROUTE 1 OVER PISCATAQUA RIVER

PEDESTRIAN RAIL AND FENCE DETAILS 2 OF 2

BRIDGE SHEET: B61A OF

REVISIONS AFTER PROPOSAL	BY	DATE		BY	DATE
DESIGNED	CSE	09/11	CHECKED	TPZ	09/11
DRAWN	PRE	09/11	CHECKED	GT	09/11
QUANTITIES	XX	XX/XX	CHECKED	XX	XX/XX

ISSUE DATE | FEDERAL PROJECT NO. | SHEET NO. | TOTAL SHEETS
REV. DATE

FILE NUMBER: 107-1-1

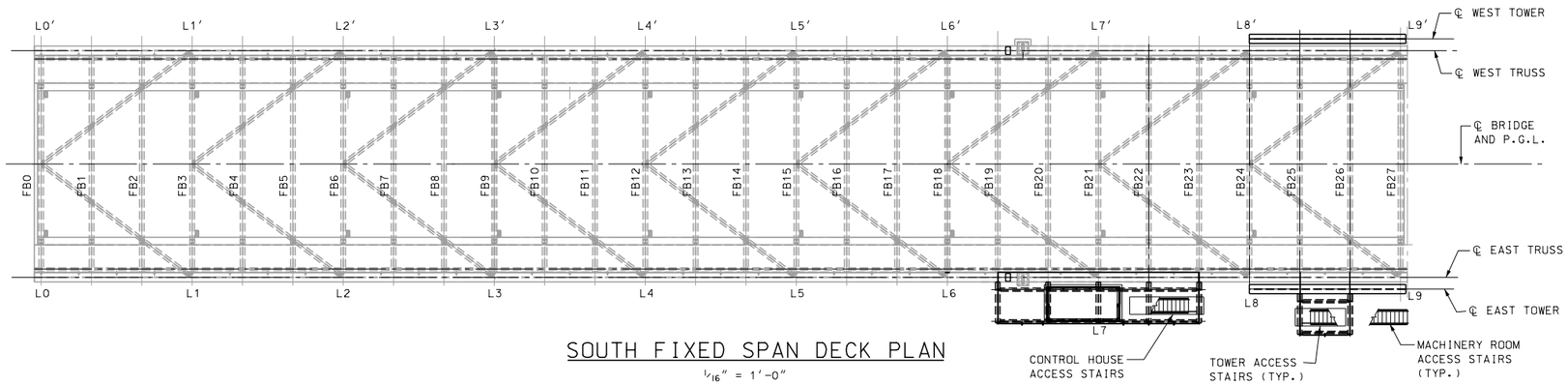

SOUTH FIXED SPAN DECK PLAN

1/16" = 1′-0"

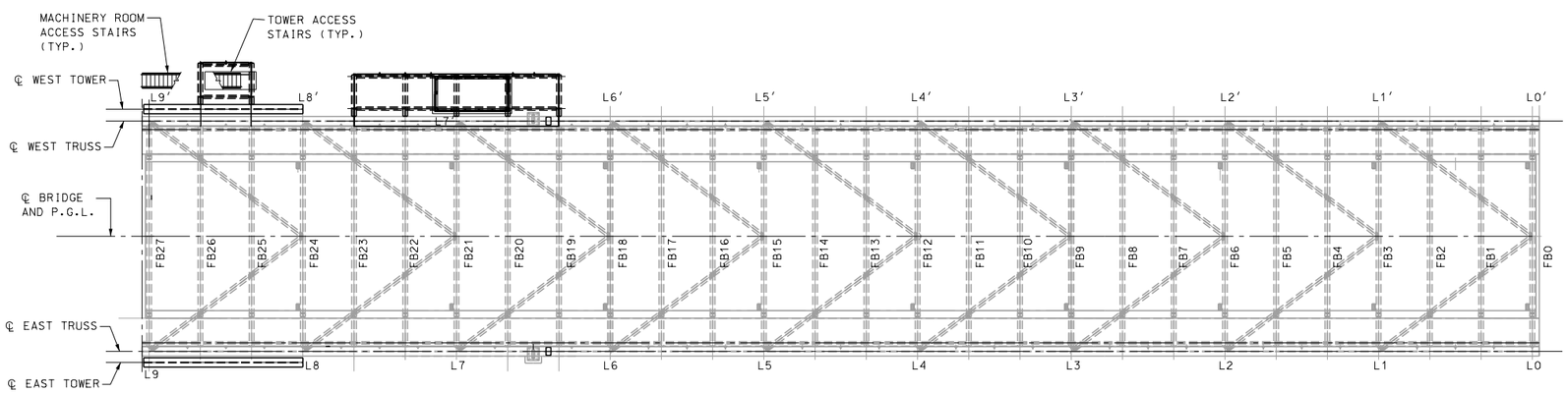

NORTH FIXED SPAN DECK PLAN

1/16" = 1′-0"

LEGEND:

U(n)	INDICATE TOP CHORD PANEL POINT
L(n)	INDICATE BOTTOM CHORD PANEL POINT
FB(n)	INDICATE FLOORBEAM PANEL POINT

NOTES:

1. PANEL POINT NUMBERS WITH A PRIME SYMBOL DESIGNATE PANELS LOCATED ON THE WEST FASCIA OF THE STRUCTURE.
2. FOR SOUTH FIXED SPAN FRAMING PLAN AND NORTH FIXED SPAN FRAMING PLAN, SEE BRIDGE SHEETS B13 AND B14 RESPECTIVELY.
3. FOR LIFT SPAN FRAMING PLAN, SEE BRIDGE SHEETS B40.
4. FOR GATE/TENDER HOUSE/SHED SUPPORT PLATFORM DETAILS, SEE BRIDGE SHEET BG5.

80% Submission
January 10, 2012

ARCHER WESTERN CONTRACTORS

HNTB
HNTB Corporation
The HNTB Companies
Engineers Architects Planners

STATE OF NEW HAMPSHIRE
DEPARTMENT OF TRANSPORTATION * BUREAU OF BRIDGE DESIGN

TOWN PORTSMOUTH, NH. - KITTERY, ME. BRIDGE NO. 247 \ 084 STATE PROJECT 13678F

LOCATION U.S. ROUTE 1 OVER PISCATAQUA RIVER

BRIDGE ACCESS PLAN

BRIDGE SHEET B62 OF

FILE NUMBER 107-1-1

REVISIONS AFTER PROPOSAL		BY	DATE		BY	DATE
	DESIGNED	JN	09/11	CHECKED	TPZ	09/11
	DRAWN	SPL	09/11	CHECKED	GT	09/11
	QUANTITIES	XX	XX/XX	CHECKED	XX	XX/XX
	ISSUE DATE		FEDERAL PROJECT NO.		SHEET NO.	TOTAL SHEETS
	REV. DATE					

SUBDIRECTORY	.DGN LOCATOR	SHEET SCALE
	$FILENAME$	1/16" = 1'-0"

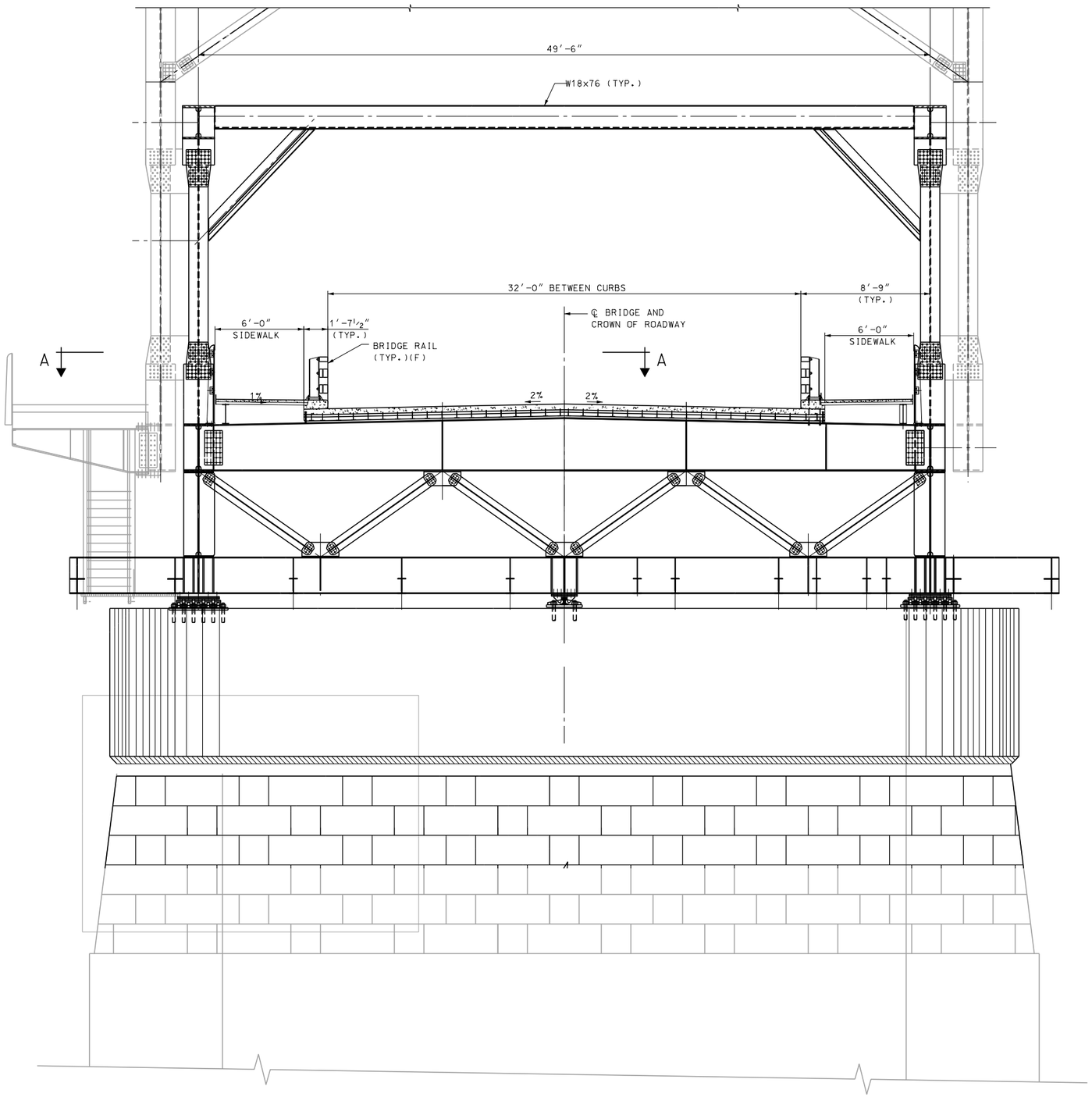

LIFT SPAN CROSS SECTION AT SOUTH TOWER

(LOOKING NORTH)

¼" = 1'-0"

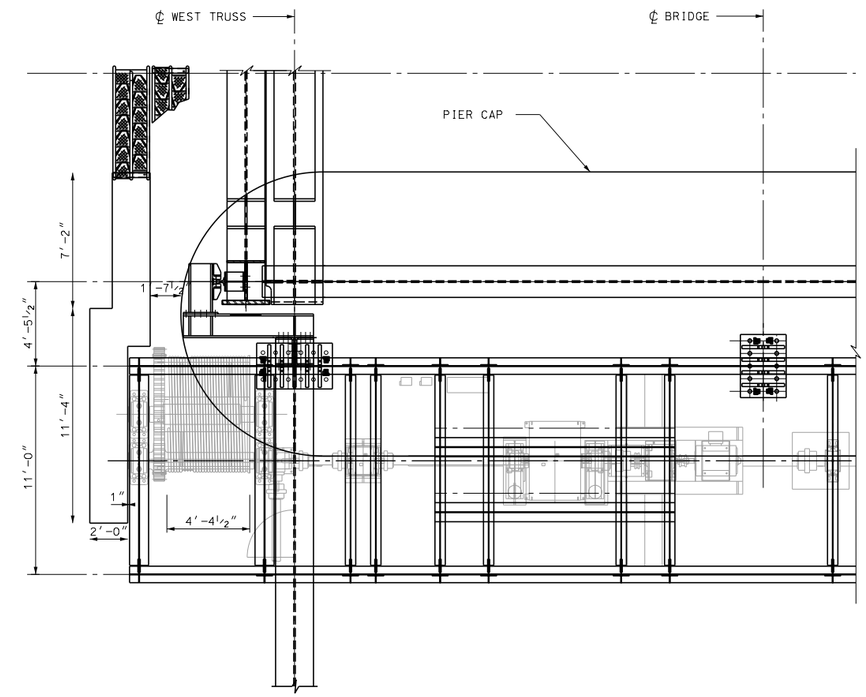

VIEW A-A

¼" = 1'-0"

NOTES:

1. FOR BRIDGE ACCESS PLAN AND ELEVATION, SEE BRIDGE SHEETS BG2 AND BG3 RESPECTIVELY.

2. FOR MACHINERY ROOM PLAN, SEE BRIDGE SHEET B49.

80% Submission
January 10, 2012

ARCHER WESTERN CONTRACTORS

HNTB
HNTB Corporation
The HNTB Companies
Engineers Architects Planners

SUBDIRECTORY	.DGN LOCATOR	SHEET SCALE
	$FILENAME$	1/4" = 1'-0"

STATE OF NEW HAMPSHIRE
DEPARTMENT OF TRANSPORTATION * BUREAU OF BRIDGE DESIGN

TOWN PORTSMOUTH, NH. - KITTERY, ME. BRIDGE NO. 247 \ 084 STATE PROJECT 13678F

LOCATION U.S. ROUTE 1 OVER PISCATAQUA RIVER

MACHINERY ROOM ACCESS

REVISIONS AFTER PROPOSAL		BY	DATE		BY	DATE
	DESIGNED	CSE	09/11	CHECKED	GT	09/11
	DRAWN	PRE	09/11	CHECKED	JN	09/11
	QUANTITIES	XX	XX/XX	CHECKED	XX	XX/XX
	ISSUE DATE					
	REV. DATE					

FEDERAL PROJECT NO. | SHEET NO. | TOTAL SHEETS

BRIDGE SHEET B64 OF

FILE NUMBER 107-1-1

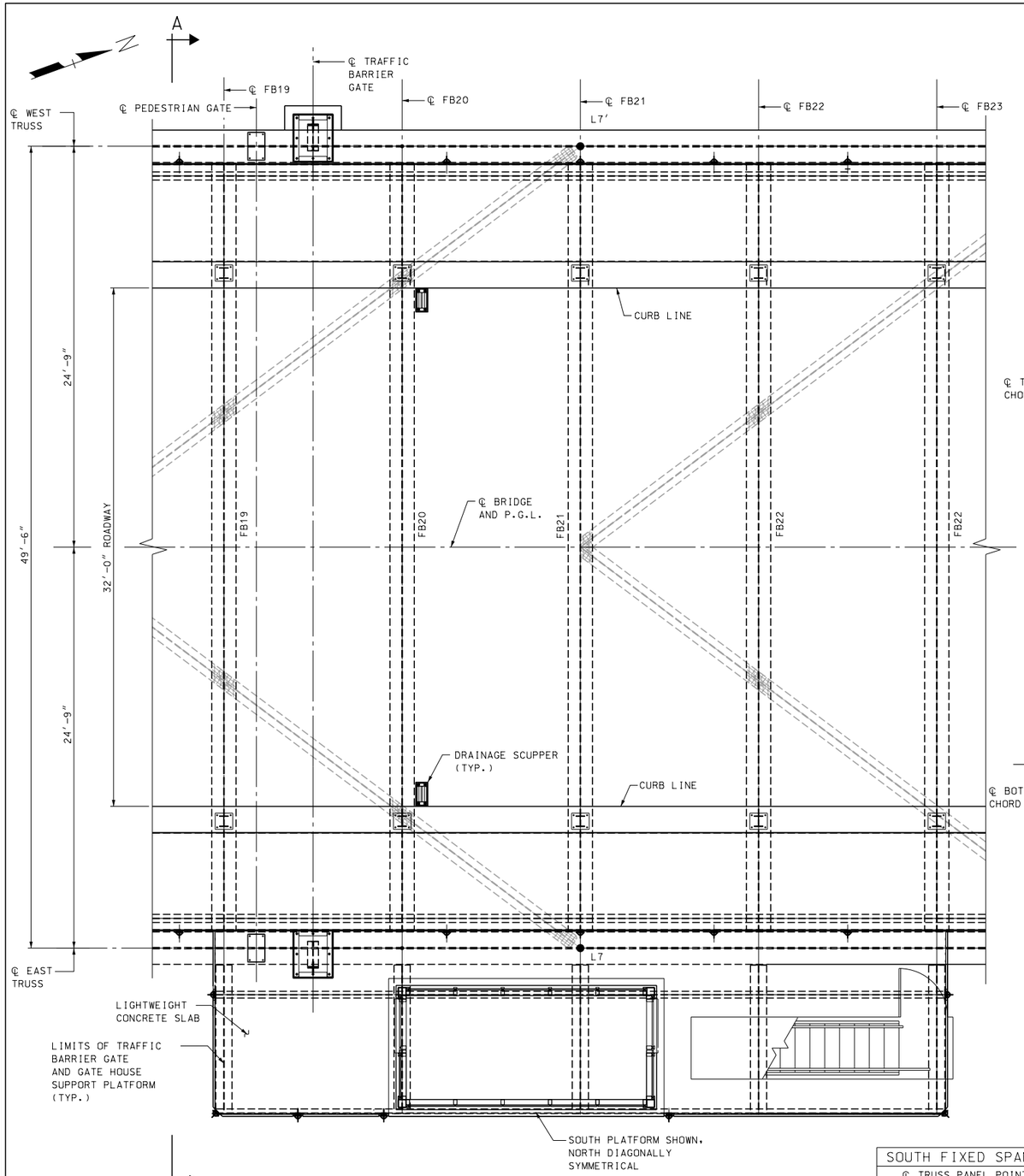

PLATFORM FRAMING PLAN

(SOUTH FIXED TRUSS SPAN SHOWN, NORTH FIXED TRUSS SPAN, DIAGONALLY SYM.)

1/4" = 1'-0"

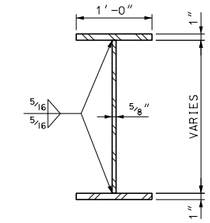

SECTION B-B

1" = 1'-0"

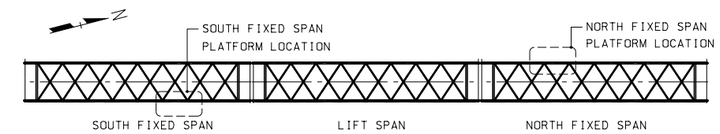

KEY PLAN

N.T.S.

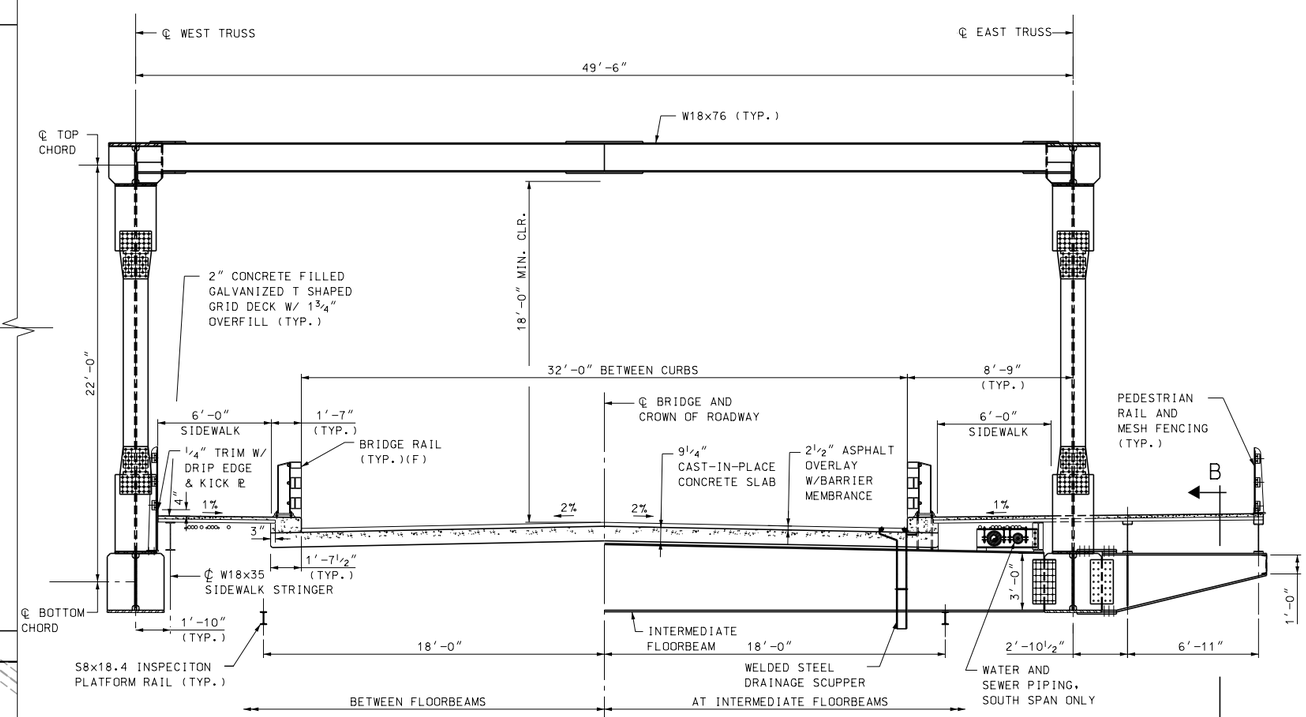

SECTION A-A

1/4" = 1'-0"

NOTES:

1. ALL STRUCTURAL STEEL SHALL BE AASHTO M270 GRADE 50 UNLESS NOTED OTHERWISE.
2. ALL BOLTS SHALL BE 7/8" DIA. HIGH STRENGTH ASTM A325 AND SHALL BE GALVANIZED PER THE REQUIREMENTS OF ASTM A153. NUTS AND WASHERS SHALL BE A563 AND F436 RESPECTIVELY, AND SHALL BE GALVANIZED PER REQUIREMENTS OF ASTM A153.
3. FOR PEDESTRIAN RAILING DETAILS, SEE BRDIGE SHEET B59.
4. FOR CONCRETE SLAB AND STEEL REINFORCEMENT DETAILS, SEE BRIDGE SHEET BXX.
5. FOR GATE TENDER HOUSE AND STORAGE SHED STRUCTURAL DETAILS, SEE BRIDGE SHEETS SXX AND SXX.
6. FOR GATE TENDER HOUSE AND STORAGE SHED ARCHITECTURAL DETAILS, SEE BRIDGE SHEETS AXX TO AXX.
7. FOR BARRIER GATE AND PEDESTRIAN GATE ELECTRICAL DETAILS, SEE ELECTRICAL BRIDGE SHEETS EXX.

SOUTH FIXED SPAN	STATION
℄ TRUSS PANEL POINT L6	26+81.00
℄ PED. GATE	26+94.00
℄ BARRIER GATE	26+97.50
℄ TRUSS PANEL POINT L7	27+14.00
NORTH FIXED SPAN	**STATION**
℄ TRUSS PANEL POINT L7	31+51.92
℄ BARRIER GATE	31+68.42
℄ PED. GATE	31+71.92
℄ TRUSS PANEL POINT L6	31+84.92

80% Submission
January 10, 2012

ARCHER WESTERN CONTRACTORS

HNTB
HNTB Corporation
The HNTB Companies
Engineers Architects Planners

STATE OF NEW HAMPSHIRE
DEPARTMENT OF TRANSPORTATION * BUREAU OF BRIDGE DESIGN

TOWN PORTSMOUTH, NH. - KITTERY, ME. BRIDGE NO. 247 \ 084 STATE PROJECT 13678F

LOCATION U.S. ROUTE 1 OVER PISCATAQUA RIVER

GATE / TENDER HOUSE / SHED SUPPORT PLATFORM

BRIDGE SHEET B65 OF

FILE NUMBER 107-1-1

REVISIONS AFTER PROPOSAL		BY	DATE		BY	DATE
	DESIGNED	JN	09/11	CHECKED	GT	09/11
	DRAWN	PRE	09/11	CHECKED	CSE	09/11
	QUANTITIES	XX	XX/XX	CHECKED	XX	XX/XX

SUBDIRECTORY	.DGN LOCATOR	SHEET SCALE	ISSUE DATE	FEDERAL PROJECT NO.	SHEET NO.	TOTAL SHEETS
	$FILENAME$	AS NOTED	REV. DATE			

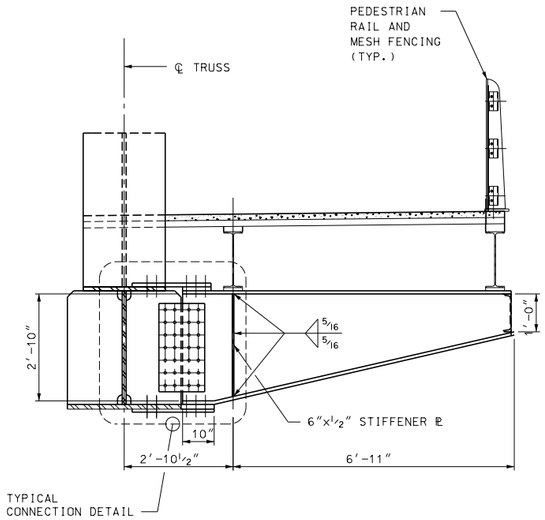

TYPICAL FLOORBEAM ELEVATION

1/2" = 1'-0"

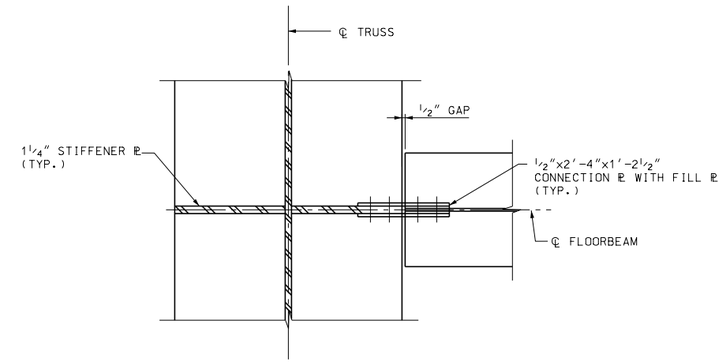

SECTION A-A

1" = 1'-0"

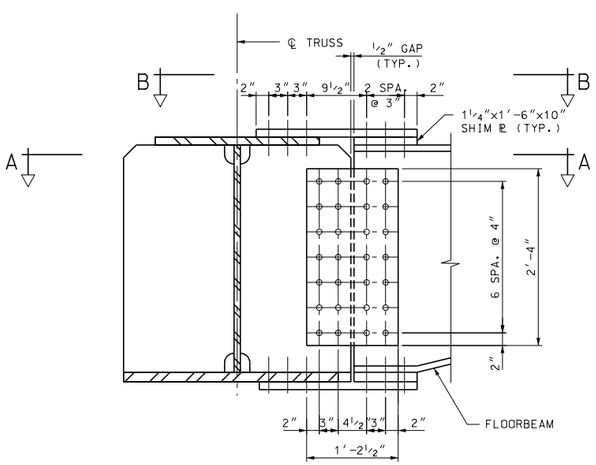

TYPICAL CONNECTION DETAIL

1" = 1'-0"

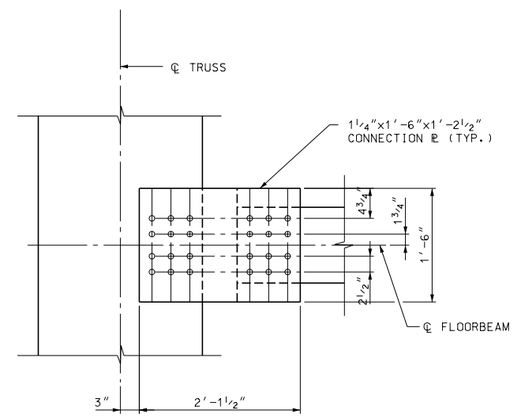

SECTION B-B

1" = 1'-0"

NOTES:

1. ALL STRUCTURAL STEEL SHALL BE AASHTO M270 GRADE 50 UNLESS NOTED OTHERWISE.
2. ALL BOLTS SHALL BE 7/8" DIA. HIGH STRENGTH ASTM A325 AND SHALL BE GALVANIZED PER THE REQUIREMENTS OF ASTM A153. NUTS AND WASHERS SHALL BE A563 AND F436 RESPECTIVELY, AND SHALL BE GALVANIZED PER REQUIREMENTS OF ASTM A153.

Progress Submission
January 6, 2012

ARCHER WESTERN CONTRACTORS

HNTB Corporation
The HNTB Companies
Engineers Architects Planners

SUBDIRECTORY	.DGN LOCATOR	SHEET SCALE
	$FILENAME$	AS NOTED

STATE OF NEW HAMPSHIRE
DEPARTMENT OF TRANSPORTATION * BUREAU OF BRIDGE DESIGN

TOWN PORTSMOUTH, NH. - KITTERY, ME. BRIDGE NO. 247 \ 084 STATE PROJECT 13678F

LOCATION U.S. ROUTE 1 OVER PISCATAQUA RIVER

SUPPORT PLATFORM DETAILS

REVISIONS AFTER PROPOSAL		BY	DATE		BY	DATE
	DESIGNED	FP	01/12	CHECKED	XX	XX/XX
	DRAWN	FP	01/12	CHECKED	XX	XX/XX
	QUANTITIES	XX	XX/XX	CHECKED	XX	XX/XX
	ISSUE DATE		FEDERAL PROJECT NO.		SHEET NO.	TOTAL SHEETS
	REV. DATE					

BRIDGE SHEET B66 OF

FILE NUMBER 107-1-1

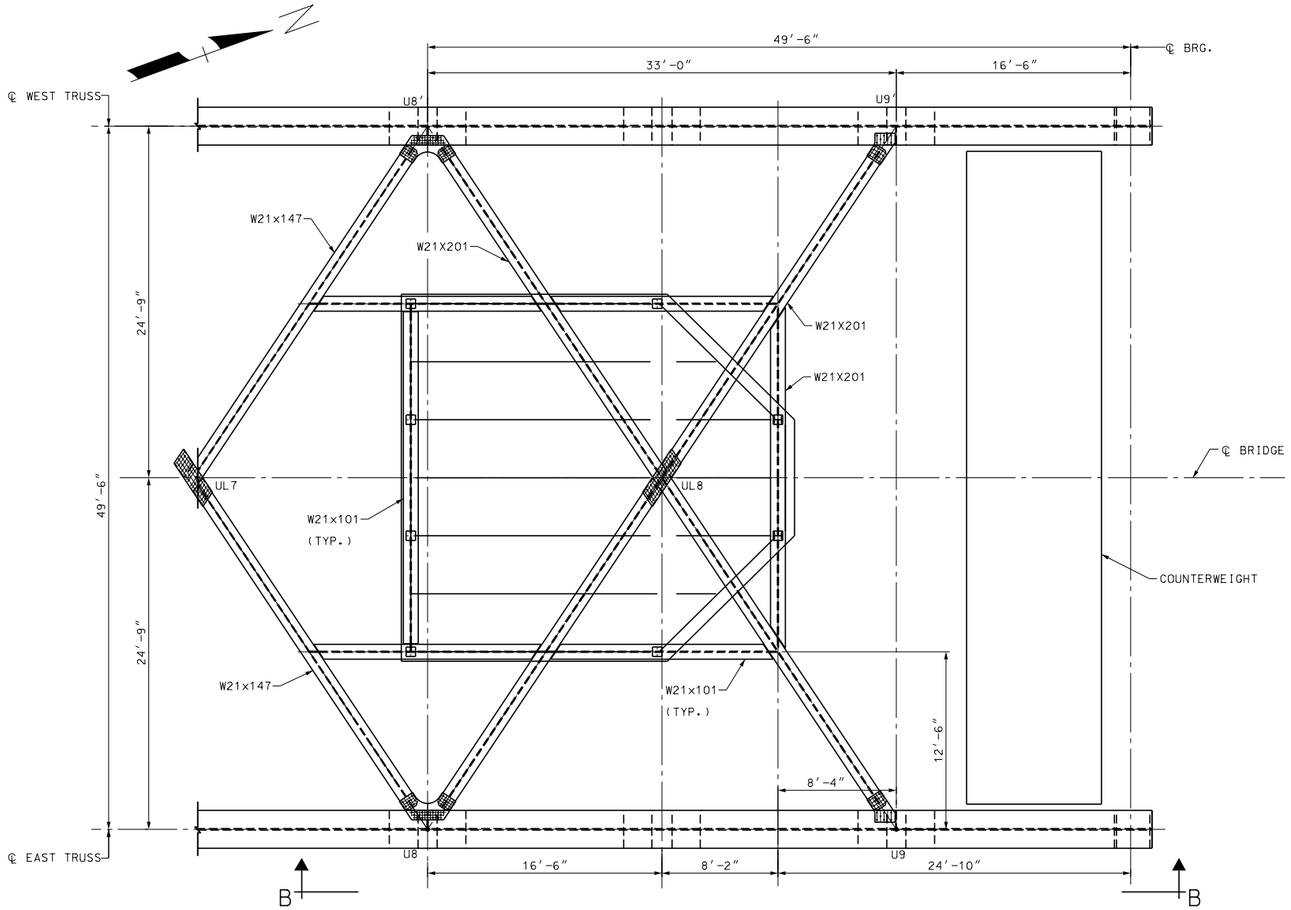

VIEW A-A: CONTROL HOUSE SUPPORT FRAMING PLAN

3/16" = 1'-0"

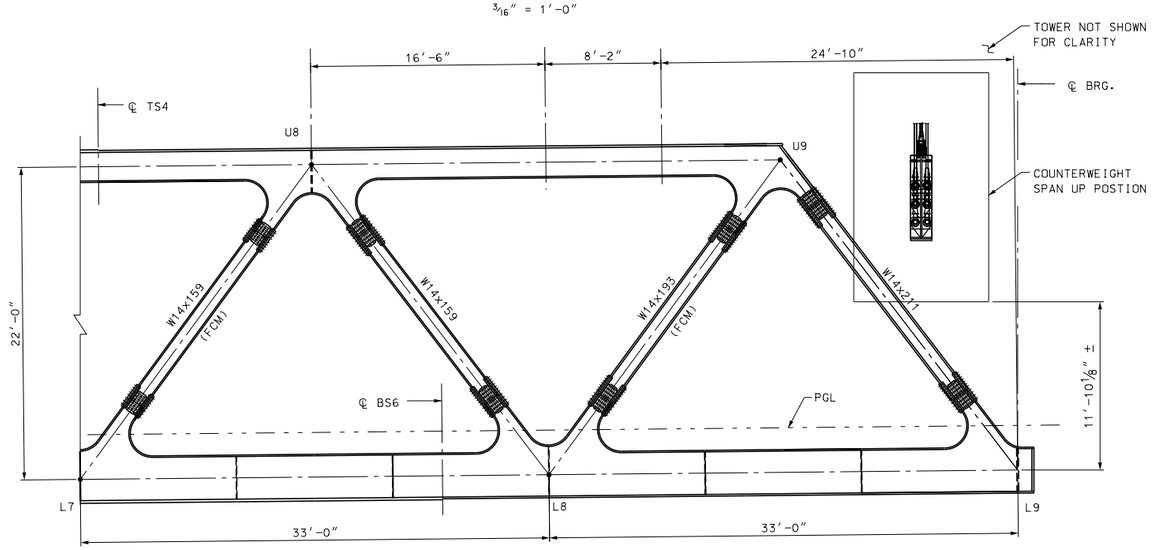

VIEW B-B

3/16" = 1'-0"

LEGEND:

U(n) INDICATES TOP CHORD PANEL POINT

L(n) INDICATES BOTTOM CHORD PANEL POINT

UL(n) INDICATES UPPER LATERAL PANEL POINT

NOTES:

1. FOR TYPICAL FIXED SPAN GEOMETRY, SEE BRIDGE SHEET B16.
2. FOR TYPICAL TOWER GEOMETRY, SEE BRIDGE SHEETS B30.
3. FOR COUNTROL HOUSE FRAMING DETAILS, SEE BUILDING STRUCTURES BRIDGE SHEETS.
4. PANEL POINT NUMBERS WITH A PRIME SYMBOL DESIGNATE PANELS LOCATED ON THE WEST FASCIA OF THE STRUCTURE.

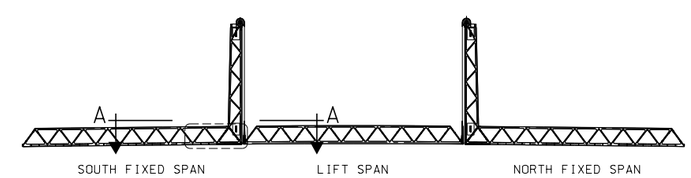

KEY ELEVATION

N.T.S.

80% Submission
January 10, 2012

ARCHER WESTERN CONTRACTORS

HNTB
HNTB Corporation
The HNTB Companies
Engineers Architects Planners

STATE OF NEW HAMPSHIRE
DEPARTMENT OF TRANSPORTATION * BUREAU OF BRIDGE DESIGN

TOWN PORTSMOUTH, NH. - KITTERY, ME. BRIDGE NO. 247\084 STATE PROJECT 13678F

LOCATION U.S. ROUTE 1 OVER PISCATAQUA RIVER

CONTROL HOUSE SUPPORT FRAMING PLAN

REVISIONS AFTER PROPOSAL		BY	DATE		BY	DATE
	DESIGNED	GT	09/11	CHECKED	JN	09/11
	DRAWN	PRE	09/11	CHECKED	GT	09/11
	QUANTITIES	XX	XX/XX	CHECKED	XX	XX/XX
	ISSUE DATE		FEDERAL PROJECT NO.		SHEET NO.	
	REV. DATE					

BRIDGE SHEET B67 OF

FILE NUMBER 107-1-1

TOTAL SHEETS

SUBDIRECTORY	.DGN LOCATOR	SHEET SCALE
	$FILENAME$	3/8" = 1'-0"