INDEX OF DRAWINGS

	NO.	DRAWING NAME
	E1	ELECTRICAL DRAWING INDEX AND ABBREVIATIONS
	E2	ELECTRICAL GENERAL NOTES AND ABBREVIATIONS
	E3	ELECTRICAL GENERAL PLAN AND ELEVATION
	E4	ONE-LINE DIAGRAM 1
	E5	ONE-LINE DIAGRAM 2
	E6	PANELBOARD SCHEDULE 1
	E7	PANELBOARD SCHEDULE 2
	E8	GENERATOR DETAILS
	E9	UTILITY SERVICE DETAILS
	E10	FIBER OPTIC INFRASTRUCTURE BLOCK DIAGRAM
	E11	INTERCOM SYSTEM BLOCK DIAGRAM
	E12	FIRE ALARM SYSTEM BLOCK DIAGRAM
	E13	CCTV CAMERA LOCATIONS
	E14	COMMUNICATIONS EQUIPMENT BLOCK DIAGRAM
	E15	LIGHTING BLOCK DIAGRAM
	E16	BRIDGE GROUNDING SYSTEM
	E17	PLC SYSTEM BLOCK DIAGRAM
	E18	ROADWAY ELECTRICAL PLAN 1
	E19	ROADWAY ELECTRICAL PLAN 2
	E20	ROADWAY ELECTRICAL PLAN 3
	E21	ROADWAY ELECTRICAL PLAN 4
	E22	ROADWAY ELECTRICAL PLAN 5
	E23	ROADWAY LIGHTING SCHEDULE AND DETAILS
NOT INCLUDED →	E24	ROADWAY ELECTRICAL DETAILS
	E25	TRAFFIC SIGNAL DETAILS
	E26	WARNING GATE DETAILS
	E27	BARRIER GATE DETAILS
	E28	DROOP CABLE INSTALLATION DETAILS 1
NOT INCLUDED →	E29	DROOP CABLE INSTALLATION DETAILS 2
NOT INCLUDED →	E30	DROOP CABLE INSTALLATION DETAILS 3
	E31	EQUIPMENT LEGEND AND SCHEDULES 1
	E32	EQUIPMENT LEGEND AND SCHEDULES 2
	E33	CONTROL HOUSE EQUIPMENT PLAN
	E34	MACHINERY HOUSE EQUIPMENT PLAN
	E35	GATE HOUSE EQUIPMENT PLAN

INDEX OF DRAWINGS

	NO.	DRAWING NAME
	E36	PIER EQUIPMENT DETAILS 1
	E37	LIGHTING LEGEND AND SCHEDULE
	E38	CONTROL HOUSE LIGHTING PLAN
	E39	MACHINERY HOUSE LIGHTING PLAN
NOT INCLUDED →	E40	GATE HOUSE LIGHTING PLAN
NOT INCLUDED →	E41	STAIRWAY & ACCESS LIGHTING PLAN
	E42	CONDUIT MOUNTING DETAILS
	E43	HEAT TRACE DETAILS
	E44	LIGHTNING PROTECTION DETAILS 1
	E45	LIGHTNING PROTECTION DETAILS 2
	E46	SAFETY SYSTEM DETAILS
	E47	MARINE NAVIGATION LIGHTING PLAN
	E48	MARINE NAVIGATION DETAILS 1
	E49	MARINE NAVIGATION DETAILS 2
	E50	AVIATION OBSTRUCTION LIGHTING PLAN
	E51	AVIATION OBSTRUCTION DETAILS
	E52	MAIN CONTROL CONSOLE LAYOUT
	E53	MAIN CONTROL CONSOLE DETAILS
	E54	MOTOR CONTROL CENTER DETAILS
	E55	SOUTH MOTOR CONTROL CENTERS
	E56	NORTH MOTOR CONTROL CENTERS
	E57	AUXILIARY CONTROL CONSOLE LAYOUT & DETAILS
	E58	SPEED TIME CURVES

GENERAL ABBREVIATIONS

AHJ	AUTHORITY HAVING JURISDICTION
APPROX	APPROXIMATE
AV	AVIATION
AWG	AMERICAN WIRE GAUGE
BC	BOLT CIRCLE
C	CONDUCTOR
CAT	CATALOG
CCTV	CLOSED CIRCUIT TELEVISION
CPU	CENTRAL ROCESSING UNIT
DBA	DRAWBRIDGE AHEAD SIGN
DIA	DIAMETER
DWG	DRAWING(S)
E	EAST
E.TBR	EXISTING TO BE REMOVED
FRE	FIBERGLASS REINFORCED CONDUIT
GRS	GALVANIZED RIGID STEEL CONDUIT
HVAC	HEATING, VENITLATING AND AIR CONDITIONING
I.D.	INNER DIAMETER
I/O	INPUT / OUTPUT
LFMC	LIQUID TIGHT FLEXIBLE METAL CONDUIT
LT	LIGHT
MAX	MAXIMUM
MIN	MAXIMUM
MISC.	MISCELLANEOUS
MTG	MOUNTING
N	NORTH
NAV	NAVIGATION
NE	NORTHEAST
NEC	NATIONAL ELECTRICAL CODE
NFPA	NATIONAL FIRE PROTECTION ASSOCIATION
NHDOT	NEW HAMPSHIRE DEPARTMENT OF TRANSPORTATION
N.O.	NORMALLY OPEN
NW	NORTHWEST
O.C.	ON CENTER
O.D.	OUTER DIAMETER
PVCGRS	POLYVINYL CHLORIDE COATED GALVANIZED RIGID STEEL CONDUIT
R, RAD	RADIUS
REQ'D	REQUIRED
RTRC	REINFORCED THERMOSETTING RESIN CONDUIT
S	SOUTH
SE	SOUTHEAST
SR	SURGE SUPPRESSOR
SS	STAINLESS STEEL
SW	SOUTHWEST
TVSS	TRANSIENT VOLTAGE SURGE SUPPRESSOR
TYP	TYPICAL
UG	UNDERGROUND
UL	UNDERWRITERS LABORATORIES
W	WATT
W	WEST

LOCATIONS

CH	CONTROL HOUSE
GEN	GENERATOR
NGH	NORTH GATE HOUSE
NMH	NORTH MACHINERY HOUSE
SGH	SOUTH GATE HOUSE
SMH	SOUTH MACHINERY HOUSE

EQUIPMENT ABBREVIATIONS

ATS	AUTOMATIC TRANSFER SWITCH
AUX	AUXILIARY
BARR	BARRIER
BCP	BRIDGE CONTROL PANELBOARD
CAP	CAPACITOR
CB	CIRCUIT BREAKER
CBL	CABLE
CLS	CAM LIMIT SWITCH
CR	CONTROL RELAY
DCTC	DROOP CABLE TERMINAL CABINET
DRVN	DRIVEN
ECC	ELECTRICAL CONTROL CABINET
FCLS	FULLY CLOSED LIMIT SWITCH
GLS	BARRIER GATE LIMIT SWITCH
GTH	GATE TENDER HOUSE
J, JB	JUNCTION BOX
KS	KEY SWITCH
LBLS	BARRIER GATE LOCKBAR LIMIT SWITCH
LP	LIGHTING PANELBOARD
LR	LATCHING RELAY
LS	LIMIT SWITCH
PL	PILOT LIGHT
LWRD	LOWERED
M	MECHANICAL CONTACTOR
MACH	MACHINERY
MCC	MOTOR CONTROL CENTER
MRLS	BRAKE MANUAL RELEASE LIMIT SWITCH
MT	METER
OFG	OFFGOING
OL	OVERLOAD RELAY
ONC	ONCOMING
OVERSPD	OVERSPEED
PB	PUSHBUTTON
PBLT	ILLUMINATED PUSHBUTTON
PH	PHASE
PLC	PROGRAMMABLE LOGIC CONTROLLER
PLLD	PULLED
PWR	POWER
RECPT	RECEPTACLE
RLS	BRAKE RELEASED LIMIT SWITCH
RS	RAISE
RSD	RAISED
SB	SWITCHBOARD
SLS	BRAKE SET LIMIT SWITCH
SES	SELECTOR SWITCH
TAS	THERMOSTATIC SWITCH
TB	TERMINAL BLOCK
TG	TOGGLE SWITCH
TLS	TRAFFIC GATE LIMIT SWITCH
UPS	UNINTERRUPTIBLE POWER SUPPLY
UV	UNDERVOLTAGE
WARN	WARNING
XFMR	TRANSFORMER

80% SUBMISSION

PRELIMINARY PLANS NOT FOR CONSTRUCTION

EQUIPMENT AND MATERIAL TYPES, SIZES, AND LAYOUTS ARE DIAGRAMMATIC AND WILL VARY BASED ON INTERDISCIPLINARY COORDINATION THROUGHOUT THE DESIGN PROCESS

80% SUBMISSION
JANUARY 18, 2012

ARCHER WESTERN CONTRACTORS

HNTB
HNTB Corporation
The HNTB Companies
Engineers Architects Planners

STATE OF NEW HAMPSHIRE
DEPARTMENT OF TRANSPORTATION * BUREAU OF BRIDGE DESIGN

TOWN PORTSMOUTH, NH - KITTERY, ME | BRIDGE NO. 247\084 | STATE PROJECT 13678
LOCATION US ROUTE 1 OVER THE PISCATAQUA RIVER

ELECTRICAL DRAWING INDEX AND ABBREVIATIONS

REVISIONS AFTER PROPOSAL		BY	DATE		BY	DATE
	DESIGNED	MCG	1/12	CHECKED	GP	1/12
	DRAWN	MDC	1/12	CHECKED	DR	1/12
	QUANTITIES	XXX	XX/XX	CHECKED	XXX	XX/XX
	ISSUE DATE		FEDERAL PROJECT NO.		SHEET NO.	TOTAL SHEETS
	REV. DATE		BHF-T-0101(015)		XXX	XXX

BRIDGE SHEET: E01 OF E67
FILE NUMBER: XXX-X-X

SUBDIRECTORY	.DGN LOCATOR	SHEET SCALE
Plans	13678F-E01_Index	NONE

DATE/TIME: 1/18/2012 3:31:52 PM USER: gstephenson
FILE NAME: s:\CFLW00\CADD\55519_Portsmouth_Rt1_Memorial_Bridge\E1\Plans\13678F-E01_Index.dgn
MODEL NAME: PLAN
LAST SAVE: 1/18/2012 1:27:49 PM

ELECTRICAL GENERAL NOTES:

G1. THESE PLANS ADDRESS THE FURNISHING, INSTALLATION, AND TESTING OF A COMPLETE BRIDGE ELECTRICAL SYSTEM FOR CONTROL AND OPERATION OF THE MOVABLE SPAN AND ALL ACCESSORY FACILITIES INCLUDING BUT NOT LIMITED TO: ALL CONTROL HOUSE, MACHINERY HOUSE, AND GATE TENDER HOUSE ELECTRICAL FACILITIES, GENERATOR, ROADWAY LIGHTING, ELECTRIC SERVICE, CABLE TELEVISION SERVICE, TELEPHONE SERVICE, INTERNET SERVICE, TRAFFIC CONTROL EQUIPMENT, BRIDGE CONTROL EQUIPMENT, COMMUNICATIONS SYSTEMS, GROUNDING SYSTEMS, AND LIGHTNING PROTECTION SYSTEMS.

G2. THE ELECTRICAL PLANS AND SPECIFICATIONS WERE PREPARED TO SHOW THE CONCEPT AND EXTENT OF INSTALLATIONS REQUIRED TO PROVIDE COMPLETE ELECTRICAL SYSTEMS. NO REPRESENTATION IS MADE AS TO THE COMPLETENESS OF THE INFORMATION SHOWN ON THESE PLANS. ANY APPARATUS, DEVICE, CIRCUIT, APPLIANCE, MATERIAL, OR LABOR NOT HEREIN SPECIFICALLY MENTIONED OR SHOWN, BUT THAT MAY BE FOUND NECESSARY TO COMPLETE OR PERFECT THE INSTALLATION AND EQUIPMENT IN A MANNER ACCEPTABLE TO THE ENGINEER, SHALL BE FURNISHED, INSTALLED, AND PAID BY THE CONTRACTOR AS IF SPECIFICALLY INCLUDED IN THESE PLANS WITHOUT ADDITIONAL COST TO THE OWNER.

G3. THESE PLANS AND SPECIFICATIONS DO NOT SHOW ALL ASPECTS OF THE REQUIRED INSTALLATIONS. PERFORM ALL WORK NECESSARY, TO PROVIDE FULLY OPERATIONAL SYSTEMS THAT ARE IN COMPLIANCE WITH ALL STATED CONTRACT REQUIREMENTS, WHETHER SHOWN ON THE PLANS OR NOT. PRESENTATION OF INCOMPLETE INFORMATION OR OMISSIONS OF DETAILS FOR ITEMS WHICH ARE NECESSARY TO CARRY OUT THE INTENT OF THE DRAWINGS AND SPECIFICATIONS, OR WHICH ARE CUSTOMARILY PERFORMED, SHALL NOT RELIEVE THE CONTRACTOR FROM PERFORMING SUCH OMISSIONS AND DETAILS OR WORK.

G4. IN ANY CASE OF DISCREPANCIES IN NOTED FIGURES, CATALOG NUMBERS, AND DESCRIPTIONS, OR WHERE MULTIPLE INTERPRETATIONS OF THE PLANS MAY BE REASONABLY MADE, SUBMIT A WRITTEN INQUIRY TO THE ENGINEER, WHO WILL PROMPTLY MAKE DETERMINATION IN WRITING. ANY DEVIATION FROM THE PLANS AND SPECIFICATIONS OR INTERPRETATIONS MADE BY THE CONTRACTOR WITHOUT WRITTEN ENGINEER APPROVAL SHALL BE AT THE CONTRACTOR'S OWN RISK AND EXPENSE.

G5. UNLESS OTHERWISE NOTED, ALL CABLES, RACEWAYS, AND EQUIPMENT TO BE FURNISHED AND INSTALLED IN THIS CONTRACT ARE SHOWN AS HEAVY/THICK LINE WEIGHT. ALL STRUCTURAL, ARCHITECTURAL AND MECHANICAL FEATURES ARE DENOTED BY LIGHT/THIN OR SCREENED LINES. ALL STRUCTURAL, MECHANICAL, AND ARCHITECTURAL INFORMATION SHOWN WITHIN THE ELECTRICAL PLANS IS FOR REFERENCE ONLY. REFER TO THE STRUCTURAL, MECHANICAL, CIVIL, OR ARCHITECTURAL PLANS FOR ALL PROPER DIMENSIONAL ASPECTS.

G6. THE ELECTRICAL EQUIPMENT AND ALL INSTALLATIONS SHALL BE IN ACCORDANCE WITH REGULATIONS OF THE LATEST ADOPTED STATE AND LOCAL CODES. ALL ELECTRICAL INSTALLATIONS SHALL CONFORM TO THE NATIONAL ELECTRIC CODE (NEC), LATEST VERSION ADOPTED BY THE AUTHORITY HAVING JURISDICTION. ALL REFERENCES TO THE NEC IN THESE PLANS SHALL BE INTERPRETED TO REFER TO THIS ADOPTED VERSION.

G7. ALL MATERIALS AND EQUIPMENT FURNISHED UNDER THIS CONTRACT SHALL BE NEW, AND TO THE EXTENT POSSIBLE, STANDARD PRODUCTS OF THE VARIOUS MANUFACTURERS, UNLESS OTHERWISE NOTED. WHERE MORE THAN ONE OF A SPECIFIC ITEM IS REQUIRED, ALL SHALL BE OF THE SAME TYPE AND MANUFACTURER, UNLESS OTHERWISE NOTED IN THE SPECIFICATIONS. ITEMS OF EQUIPMENT OR MATERIAL WHICH ARE NOT SPECIFICALLY DEFINED SHALL CONFORM TO THE GENERAL STANDARD OF QUALITY ESTABLISHED IN THE PLANS AND SPECIFICATIONS. ALL ITEMS PROVIDED SHALL BE UL-LISTED ACCORDING TO THE MOST RECENT ADOPTED UL STANDARDS, UNLESS THE ITEM IS OF A TYPE THAT UL DOES NOT PROVIDE A LISTING.

G8. UNLESS SPECIFICALLY NOTED, THE ELECTRICAL DRAWINGS ARE DIAGRAMMATIC IN NATURE. EQUIPMENT SIZES AND RACEWAY ROUTINGS MAY BE APPROXIMATED OR SHOW AS CONCEPTUAL LAYOUT. DEPENDING ON MANUFACTURER SELECTED AND FINAL FIELD CONDITIONS, NOT EVERY DETAIL OR EXACT LOCATION OF EQUIPMENT AND/OR CONDUIT MAY BE SHOWN.

G9. INSTALL ELECTRICAL EQUIPMENT IN THE LOCATIONS DEPICTED ON THE PLANS. SLIGHT DEVIATIONS IN LOCATION WILL BE PERMITTED ONLY UPON PRIOR APPROVAL BY THE ENGINEER. DETAILS OF EQUIPMENT INSTALLATIONS SHALL BE AS INDICATED IN THE PLANS AND SPECIFICATIONS, OR OTHERWISE AS DIRECTED BY THE ENGINEER.

G10. ALL DIRECTIONAL REFERENCES THROUGHOUT THE ELECTRICAL PLANS DEPICT ORIENTATION AS IT APPLIES TO THE BRIDGE AS SHOWN ON THE GENERAL PLAN AND ELEVATION.

STAGING, COORDINATION, AND VERIFICATION:

S1. PRIOR TO THE COMMENCEMENT OF ANY WORK, SUBMIT A COMPREHENSIVE STAGING PLAN IN ACCORDANCE WITH THE REQUIREMENTS OF THESE PLANS, WHICH SHALL CLEARLY DEFINE SPECIFIC MILESTONE DATES FOR ELECTRICAL WORK TO THE ENGINEER FOR APPROVAL. COORDINATE WITH THE ENGINEER FOR ALL CONSTRUCTION OF OTHER DISCIPLINES THAT MAY AFFECT OPERATIONS, SCHEDULE OR THE FUNCTIONAL REQUIREMENTS OF THE BRIDGE.

S2. COORDINATE ALL ELECTRICAL WORK DESCRIBED IN THESE PLANS WITH THE WORK OF ALL OTHER DISCIPLINES, SO THAT ALL INSTALLATIONS ARE PROPERLY STAGED AND WILL OPERATE AS DESIGNED. PROVIDE SCALED COORDINATION DRAWINGS SHOWING THE CO-LOCATION OF ALL BRIDGE EQUIPMENT INCLUDING BUT NOT LIMITED TO THE PLUMBING, MECHANICAL, HVAC, ELECTRICAL, COMMUNICATIONS, AND ALARM SYSTEMS. SUBMIT THESE COORDINATION DRAWINGS FOR REVIEW AND APPROVAL BY THE ENGINEER PRIOR TO COMPLETION OF ANY INSTALLATION WORK FOR THE AFOREMENTIONED SYSTEMS.

S3. FIELD VERIFY ALL DIMENSIONS RELATING TO ELECTRICAL EQUIPMENT INSTALLATIONS PRIOR TO PERFORMING THE ACTUAL INSTALLATION, AND AS THE CONSTRUCTION PROGRESSES. IMMEDIATELY REPORT ANY DISCREPANCIES OR DEVIATIONS NOTED AS PART OF THE FIELD VERIFICATION TO THE ENGINEER. AFTER HAVING NOTED AND REPORTED THE DISCREPANCIES/DEVIATIONS, WORK ON ITEMS THAT MAY BE AFFECTED BY THE DISCREPANCIES WILL BE AT THE CONTRACTOR'S RISK AND EXPENSE UNTIL DIRECTION IS PROVIDED BY THE ENGINEER.

CONTROL SYSTEM:

C1. ALL INTERLOCKING SHALL BE TESTED AND ASSURED COMPLETELY FUNCTIONAL UPON COMPLETION OF INSTALLATION. CONTRACTOR SHALL ASSUME RESPONSIBILITY FOR THIS REQUIREMENT UPON DELIVERY OF SYSTEM TO OWNER.

C2. ELECTRICAL SCHEMATICS, WHERE PROVIDED, ARE INTENDED TO SHOW THE BRIDGE CONTROL SYSTEM OPERATION ONLY. EXCLUDED ARE CONTROL HOUSE AND BUILDING-RELATED ELECTRICAL FACILITIES SUCH AS RECEPTACLES, HVAC, COMMUNICATIONS AND LIGHTING. THE CONTRACTOR SHALL FOLLOW THESE SCHEMATICS AS CLOSELY AS POSSIBLE. ANY DEVIATION FROM THESE SCHEMATICS IN TERMS OF CONTROL LOGIC AND HARDWIRING ARRANGEMENTS SHALL BE SUBMITTED TO THE ENGINEER, IN COMPLETE DETAIL FOR APPROVAL, PRIOR TO CONSTRUCTION.

UTILITIES AND SERVICES:

U1. COORDINATE ALL TEMPORARY AND PROPOSED UTILITY SERVICES (INCLUDING BUT NOT LIMITED TO POWER, CABLE TELEVISION, INTERNET, AND TELEPHONE SERVICES). PERFORM STAGED CUTOVERS TO THE BRIDGE POWER DISTRIBUTION AND COMMUNICATIONS SYSTEMS AS SHOWN ON THE PLANS, AND AS REQUIRED TO MAINTAIN POWER AND COMMUNICATIONS EQUIPMENT FOR THE DURATION OF CONSTRUCTION. PROVIDE ALL EQUIPMENT AND PERFORM INSTALLATIONS AS REQUIRED BY THE UTILITY COMPANIES. UTILITY INSTALLATION DETAILS SHOWN IN THE PLANS ARE PROVIDED FOR REFERENCE. CONFIRM THESE UTILITY INSTALLATION DETAILS SHOWN WITH THE UTILITY COMPANIES PRIOR TO PERFORMING WORK. FULL RESPONSIBILITY FOR THE SERVICES SHALL LIE WITH THE CONTRACTOR.

U2. THE CONTRACTOR SHALL FURNISH AND INSTALL ALL FIRE ALARM SYSTEM EQUIPMENT REQUIRED TO PROVIDE A FULLY FUNCTIONAL SYSTEM AS DESCRIBED IN THESE ELECTRICAL PLANS AND SPECIAL PROVISIONS. INSTALLATION DETAILS SHOWN IN THE PLANS ARE PROVIDED FOR REFERENCE. PERFORM INSTALLATIONS IN ACCORDANCE WITH THE AUTHORITY HAVING JURISDICTION. PROVIDE ADDITIONAL EQUIPMENT AS REQUIRED BY THE AHJ AT NO ADDITIONAL COST TO THE OWNER.

U3. ALL INTERNET, TELEPHONE, AND CABLE TELEVISION FEEDS TO THE CONTROL HOUSE SHALL BE ROUTED FROM THEIR RESPECTIVE POINTS OF SERVICE TO THE CONTROL HOUSE USING REDUNDANT CABLING SO THAT THE SECONDARY CABLE CAN CONTINUE TO PROVIDE SERVICE IN THE EVENT THAT THE PRIMARY CABLE FAILS.

U4. SEE CIVIL DRAWINGS FOR DETAILS OF WATER AND SEWER UTILITIES TO THE STRUCTURE WHICH ARE NOT PART OF THE ELECTRICAL WORK.

CONDUITS, WIRING, AND ELECTRICAL EQUIPMENT:

W1. REINFORCED THERMOSETTING RESIN CONDUIT (RTRC) SHALL BE MEET ALL REQUIREMENTS OF UL 1684, NEMA TC-14, AND THE NEC. RTRC SHALL BE AS MANUFACTURED BY CHAMPION FIBERGLASS OR APPROVED EQUAL. FOR ALL EXPOSED APPLICATIONS, AND UNLESS OTHERWISE NOTED, RTRC SHALL BE TYPE "XW", BULLET RESISTANT FIBERGLASS AND LABELED ACCORDINGLY FOR IMPACT RESISTANCE. THIS REQUIREMENT MAY ONLY BE WAIVED WITH APPROVAL IN ADVANCE BY THE ENGINEER WHERE THE THICKER CONDUIT WALL CREATES SPACE CONSTRAINT ISSUES (AS DETERMINED BY THE ENGINEER).

W2. ALL CONDUITS AND FITTINGS USED IN ANY SINGLE CONTINUOUS CONDUIT RUN SHALL BE THE PRODUCT OF A SINGLE MANUFACTURER. CONDUIT PENETRATIONS THROUGH WALLS AND FLOORS OF BUILDINGS SHALL BE SEALED WITH AN APPROVED RATED FIRE-STOP SEALANT.

W3. PROVIDE APPROVED SURGE SUPPRESSION AT BOTH ENDS OF ALL DATA LINES RUN OUTDOORS.

W4. WHERE A SEPARATE EQUIPMENT GROUNDING CONDUCTOR IS NOT SHOWN ON THE DRAWINGS, PROVIDE AN ADDITIONAL EQUIPMENT GROUNDING CONDUCTOR, SIZED IN ACCORDANCE WITH THE NEC.

W5. ALL ELECTRICAL RACEWAYS SHOWN THROUGHOUT THE PLANS ARE DESIGNATED WITH AN "R" PREFIX TO FACILITATE CROSS REFERENCE BETWEEN THE PLANS AND THE RACEWAY SCHEDULES. THE CONTRACTOR SHALL FOLLOW THE NUMBERING CONVENTION SHOWN WITHIN THE PLANS. ADDITIONAL RACEWAYS ADDED SHALL CONTINUE THE "R" NUMBERING FROM THE LAST NUMBER SHOWN IN THE PLANS SO AS TO BE A CONTINUATION OF THE NUMBERING SHOWN IN THE PLANS. THE CONTRACTOR MAY SUBSTITUTE AN ALTERNATE NUMBERING SCHEME ONLY WITH PRIOR APPROVAL FROM THE ENGINEER. DEVIATIONS IN RACEWAY SCHEDULES SUCH AS CONDUIT SIZES, FILL, RACEWAY NUMBER DESIGNATION AND INCLUDED CIRCUITS SHALL BE PROVIDED BY THE CONTRACTOR AS A PART OF THE AS-BUILT DRAWINGS.

W6. FURNISH AND INSTALL ENGRAVED BRASS TAGS AT BOTH ENDS OF ALL RACEWAY RUNS IDENTIFYING THEM WITH FINAL CONDUIT DESIGNATIONS WHICH SHALL COINCIDE WITH THOSE IN THE CONTRACTOR'S FINAL AS-BUILT DRAWINGS AND RACEWAY SCHEDULE. PAYMENT FOR THESE TAGS WILL BE INCLUDED UNDER THE VARIOUS PAY ITEMS TO WHICH THE RACEWAYS PERTAIN. FOR INFORMATION REGARDING RACEWAYS AND CIRCUITS THEREIN, REFER TO THE CABLE AND RACEWAY SCHEDULES. THE RACEWAYS IDENTIFIED IN THE PLANS ARE PRIMARILY THOSE FOR BRIDGE CONTROL SYSTEM WIRING. FURNISH AND INSTALL ALL RACEWAYS TO SUPPORT ALL DESCRIBED SYSTEMS INCLUDING HVAC AND LIGHTING AS WELL AS TELEPHONE, INTERNET, CABLE TELEVISION, FIRE ALARM, CCTV, AND INTERCOM. THE CONTRACTOR SHALL PROVIDE ADEQUATE RACEWAY SPACE SO AS TO LIMIT RACEWAY FILL TO THE LIMITS ESTABLISHED IN THE NEC.

W7. ALL HARDWARE AND MOUNTING EQUIPMENT SHALL BE STAINLESS STEEL UNLESS OTHERWISE NOTED.

W8. WIREWAYS SHALL BE NEMA 4X STAINLESS STEEL, WITH CONTINUOUS HINGES AND LATCHES (QUANTITY AS REQUIRED TO MEET NEC REQUIREMENTS).

W9. CONDUIT SIZES SHOWN ON PLANS FOR REFERENCE ONLY. CONTRACTOR SHALL BE RESPONSIBLE FOR ULTIMATE CONDUIT SIZES. SEE SPECIFICATIONS FOR MOR INFORMATION.

W10. LIQUIDTIGHT FLEXIBLE METALLIC CONDUIT (LFMC) SHALL BE USED ONLY FOR APPLICATIONS THAT REQUIRE A HIGH DEGREE OF FLEXIBILITY OR TO ACCOMODATE MOVING OR VIBRATING PARTS. SUBSTITUTION OF OTHER CONDUIT TYPES WITH LFMC SHALL NOT BE MADE SOLELY FOR THE CONVENIENCE OF INSTALLATION.

W11. MAXIMUM SPACING FOR CONDUIT SUPPORTS SHALL BE 6'-0" INDEPENDENT OF SIZE OF CONDUIT. DEVIATION FROM THIS REQUIREMENT SHALL BE AT THE SOLE DISCRETION OF THE ENGINEER.

W12. WHERE RTRC OR PVCGRS IS USED, THE CONTRACTOR SHALL COMPLETE THE MANUFCATURER'S RECOMMENDED TRAINING CLASS. CONTRACTOR SHALL PROVIDE PROOF OF SUCCESSFUL COMPLETION TO THE ENGINEER PRIOR TO PERFORMING INSTALLATIONS.

JUNCTION BOXES, PULL BOXES, CABINETS, AND FITTINGS:

J1. FURNISH AND INSTALL JUNCTION AND PULL BOXES, REDUCERS, AND OTHER FITTINGS AS REQUIRED BY THESE SPECIFICATIONS OR WHERE REQUIRED BY THE NEC, OR WHERE REQUIRED TO FACILITATE PULLING, WHETHER SHOWN ON PLANS OR NOT.

J2. UNLESS OTHERWISE NOTED, SURFACE MOUNTED PULL, JUNCTION, SPLICE, AND TERMINAL BOXES SHALL BE 14 GAUGE STAINLESS STEEL, NEMA 4X, AND SHALL BE PROVIDED WITH CONTINUOUS HINGES AND OVERLAPPING COVERS OF THE SAME MATERIAL. BOXES THAT REQUIRE REMOVAL OF SCREWS OR HARDWARE TO OPEN WILL NOT BE PERMITTED. BOXES LARGER THAN 12"X12" SHALL BE PROVIDED WITH 3-POINT LATCHES AND KEY OR PAD-LOCK PROVISIONS. WALL-MOUNTED BOXES INSTALLED IN CONDITIONED SPACES (DEFINED AS SPACES THAT ARE HEATED AND VENTILATED AT A MINIMUM) SHALL BE STAINLESS STEEL, BUT WILL BE PERMITTED TO BE NEMA 12.

J3. EXTERIOR BOXES MOUNTED ON THE BRIDGE STEELWORK SHALL BE PRIMED AND PAINTED THE SAME COLOR AS THE BRIDGE, UNLESS THIS REQUIREMENT IS WAIVED BY THE ENGINEER.

J4. ALL BOXES SHALL BE PROVIDED WITH MOUNTING LUGS AND SHALL BE SECURELY FASTENED TO THE STRUCTURE WITH NOT LESS THAN FOUR STAINLESS STEEL METAL THROUGH-BOLTS. SHEET METAL ENCLOSURES SHALL BE DRILLED TO RECEIVE THE CONDUIT ENDS, WHICH SHALL BE SECURED WITH INSULATED MYERS-STYLE HUB CONNECTORS. THE CONDUIT ENDS PROJECTING INTO ALL BOXES AND ENCLOSURES SHALL BE EQUIPPED WITH INSULATED BUSHINGS. NO BOX OR ENCLOSURE SHALL BE DRILLED FOR MORE CONDUITS THAN ACTUALLY ENTER IT. USE OF PLUGS TO FILL UNUSED HOLES WILL NOT BE PERMITTED. ANY SUCH BOXES SHALL BE REPLACED NEW.

J5. PROVIDE DRAIN HOLESS IN BOXES AT LOW POINTS OF CONDUIT RUNS, WHERE WATER COLLECTS, OR WHERE DIRECTED BY THE ENGINEER.

J6. STANDARD GALVANIZED STEEL OUTLET BOXES SHALL BE FURNISHED AND INSTALLED AT ALL FLUSH OUTLETS FOR LIGHTING FIXTURES, SWITCHES, AND RECEPTACLES WHERE THESE DEVICES ARE PROPOSED ON THE PLANS FOR INSTALLATION. EXPOSED OUTLET BOXES MOUNTED ON THE SURFACE SHALL BE WEATHERPROOF CAST ALLOW TYPE WITH THREADED HUBS AND SUITABLE MATCHING COVERS FOR SWITCHES AND RECEPTACLES. BOXES FOR SURFACE OR EXTERIOR MOUNTED WIRING DEVICES SHALL BE CAST-IRON, HOT-DIPPED GALVANIZED, TYPE FS, FD, OR APPROVED EQUAL. BOXES FOR FLUSH-MOUNTED DEVICES IN FINISHED AREAS SHALL BE STAMPED GALVANIZED STEEL. GALVANIZED STEEL OUTLET BOXES AND COVERS SHALL NOT BE LESS THAN 1/16 INCH THICK.

J7. FRAMEWORK FOR SUPPORTING BOXES, SWITCHES, AND OTHER ELECTRICAL DEVICES SHALL BE FABRICATED FROM STAINLESS STEEL.

J8. ALL MOUNTING BOLTS, NUTS, WASHERS, AND OTHER HARDWARE USED FOR FASTENING BOXES, DISCONNECT SWITCHES, DEVICES, LIGHTING OUTLET BOXES, CONDUIT CLAMPS, AND SIMILAR DEVICES SHALL BE STAINLESS STEEL. BOLT HEADS AND NUTS SHALL BE HEXAGONAL, AND BOLTS SMALLER THAN 3/8 INCH IN DIAMETER SHALL NOT BE USED EXCEPT AS MAY BE NECESSARY TO FIT THE MOUNTING HOLES IN SMALL DEVICES, OUTLET BOXES, AND SIMILAR STANDARD EQUIPMENT.

J9. BOXES SHALL BE OF SUCH FORM AND DIMENSION AS TO BE ADAPTED TO THE SPECIFIC USE, LOCATION AND KIND OF FIXTURE TO BE ATTACHED AND THE NUMBER, SIZE AND ARRANGEMENT OF CONDUITS CONNECTING THERETO. THERE SHALL BE NO HOLES IN BOXES THAT ARE NOT USED FOR CONDUITS.

LOCATION	SYSTEM	CONDUIT TYPE
CONTROL HOUSE	BRIDGE POWER AND CONTROL	GRS, EXPOSED
	LIGHTING AND OTHER SYSTEMS	GRS, CONCEALED BEHIND GYPSUM BOARD
GATE HOUSE	BRIDGE POWER AND CONTROL	RTRC, EXPOSED
	LIGHTING AND OTHER SYSTEMS	GRS, EXPOSED
MACHINERY HOUSE	ALL	RTRC, EXPOSED
APPROACH	ALL	RTRC, EXPOSED
UNDERGROUND	ALL	RTRC OR PVC SCHEDULE 40
EXPOSED ON TRUSS STEEL	ALL	RTRC
CAST IN CONCRETE	ALL	PVC SCHEDULE 80 WITH SS NIPPLE
ON ALUMINUM STRUCTURES	ALL	ALUMINUM
AREAS THAT REQUIRE FLEXIBILITY	ALL	LFMC (6'-0" MAX.)
OTHER LOCATIONS NOT SPECIFICALLY NOTED	ALL	RTRC

CONDUIT TYPE BY LOCATION AND SYSTEM

80% SUBMISSION
JANUARY 18, 2012

ARCHER WESTERN CONTRACTORS

HNTB
HNTB Corporation
The HNTB Companies
Engineers Architects Planners

SUBDIRECTORY	.DGN LOCATOR	SHEET SCALE
Plans	13678F-E02_GNote	NONE

STATE OF NEW HAMPSHIRE
DEPARTMENT OF TRANSPORTATION * BUREAU OF BRIDGE DESIGN

TOWN PORTSMOUTH, NH - KITTERY, ME BRIDGE NO. 247/084 STATE PROJECT 13678

LOCATION US ROUTE 1 OVER THE PISCATAQUA RIVER

ELECTRICAL GENERAL NOTES AND ABBREVIATIONS

REVISIONS AFTER PROPOSAL				BY	DATE		BY	DATE
			DESIGNED	MCG	1/12	CHECKED	GP	1/12
			DRAWN	MDC	1/12	CHECKED	DR	1/12
			QUANTITIES	XXX	XX/XX	CHECKED	XXX	XX/XX

ISSUE DATE
REV. DATE

FEDERAL PROJECT NO. BHF-T-0101(015)
SHEET NO. XXX
TOTAL SHEETS XXX

BRIDGE SHEET E02 OF E67
FILE NUMBER XXX-X-X

DATE/TIME:1/18/2012 3:32:00 PM USER:gstephenson
FILE NAME:s:\FFLW00\CADD\55519_Portsmouth_Rt1_Memorial_Bridge\E1\Plans\13678F-E02_GNote.dgn
MODEL NAME:PLAN
LAST SAVE:1/18/2012 1:30:12 PM

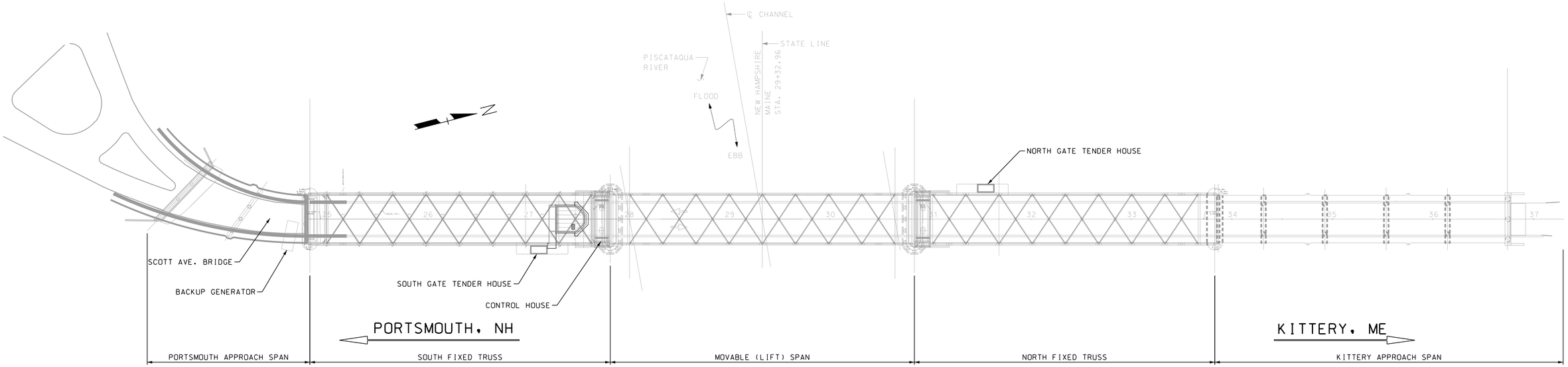

PLAN

1" = 50'-0"

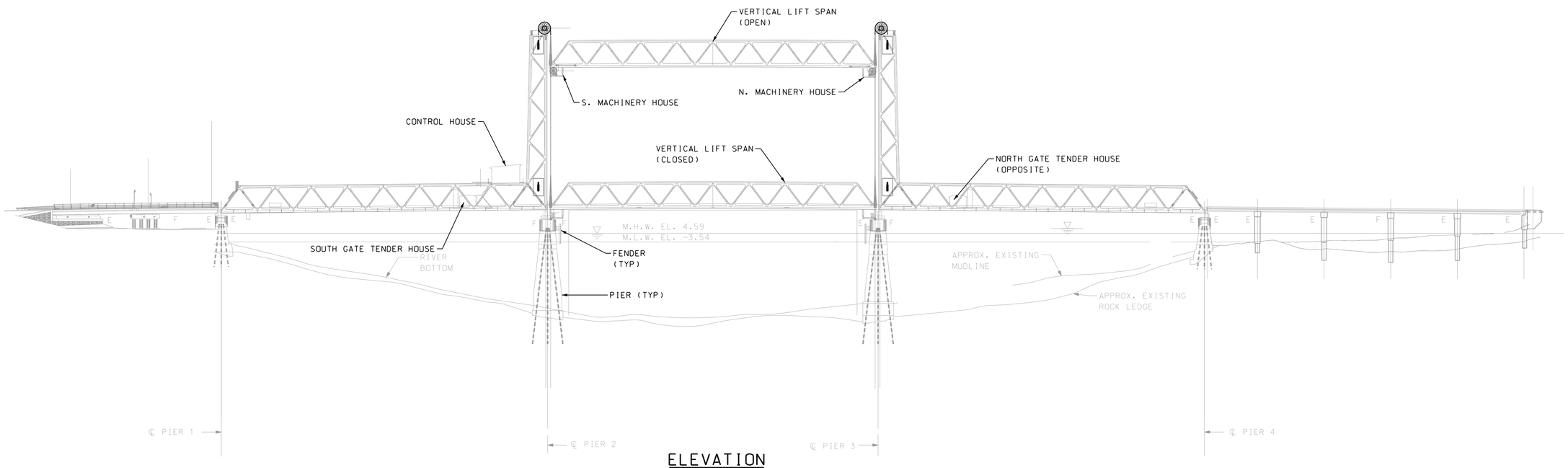

ELEVATION

1" = 50'-0"

80% SUBMISSION
JANUARY 18, 2012

ARCHER WESTERN CONTRACTORS

HNTB
HNTB Corporation
The HNTB Companies
Engineers Architects Planners

SUBDIRECTORY	.DGN LOCATOR	SHEET SCALE
Plans	13678F-E03_GP&E	1" = 50'-0"

STATE OF NEW HAMPSHIRE
DEPARTMENT OF TRANSPORTATION * BUREAU OF BRIDGE DESIGN

TOWN PORTSMOUTH, NH - KITTERY, ME BRIDGE NO. 247/084 STATE PROJECT 13678

LOCATION US ROUTE 1 OVER THE PISCATAQUA RIVER

ELECTRICAL GENERAL PLAN AND ELEVATION

REVISIONS AFTER PROPOSAL				BY	DATE		BY	DATE
			DESIGNED	MCG	1/12	CHECKED	GP	1/12
			DRAWN	MDC	1/12	CHECKED	DR	1/12
			QUANTITIES	XXX	XX/XX	CHECKED	XXX	XX/XX
			ISSUE DATE		FEDERAL PROJECT NO.		SHEET NO.	
			REV. DATE		BHF-T-0101(015)		XXX	

BRIDGE SHEET E03 OF E67
FILE NUMBER XXX-X-X
TOTAL SHEETS XXX

DATE/TIME: 1/18/2012 3:32:02 PM USER: gstephenson
FILE NAME: s:\FFL\WOS\CADD\55519_Portsmouth_R+1_Memorial_Bridge\E1\Plans\13678F-E03_GP&E.dgn
MODEL NAME: Gen Plan - Elevation
LAST SAVE: 1/18/2012 1:30:47 PM

CABLES NOT SIZED FOR VOLTAGE DROP.
SHALL BE PROVIDED FOR 100% SUBMITTAL

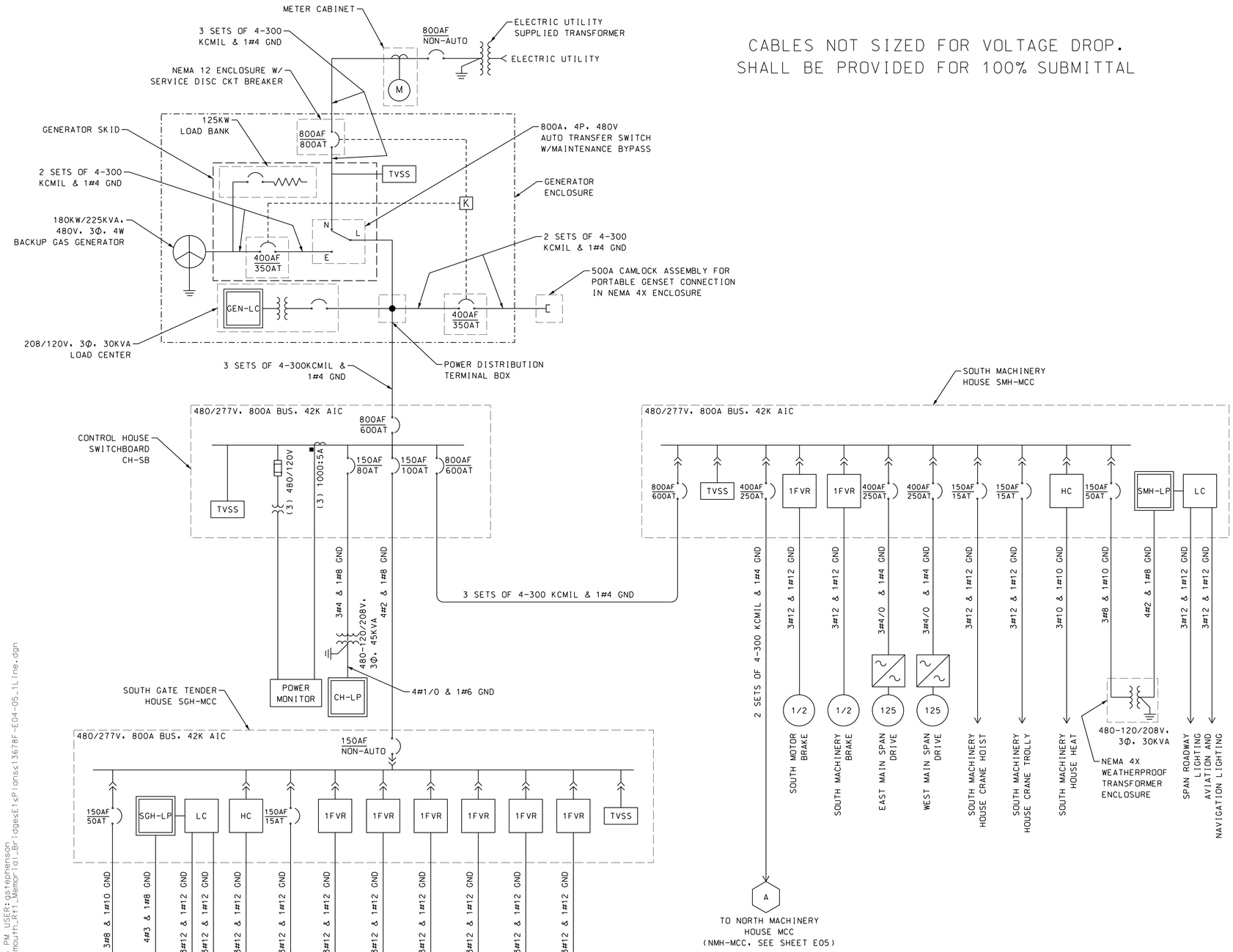

NOTES:

1. ALL SEPARATELY DERIVED NEUTRALS MUST BE GROUNDED.
2. THE BACKUP GENERATOR SHALL BE INTERCONNECTED TO ALLOW SELECTION OF REMOTE STARTING OR AUTOMATIC STARTING BY THE BRIDGE OPERATOR FROM CONTROL CONSOLE.
3. ELECTRIC UTILITY TRANSFORMER SHALL BE FURNISHED AND INSTALLED BY THE ELECTRIC UTILITY.
4. MACHINERY HOUSE MOTOR CONTROL CENTERS SHALL BE 71" HIGH, REDUCED HEIGHT MOTOR CONTROL CENTERS BY ALLEN BRADLEY OR APPROVED EQUAL.
5. MOTOR CONTROL CENTERS SHALL BE EQUIPPED WITH TERMINAL BLOCKS FOR TERMINATION OF ALL FIELD WIRING.
6. BRIDGE SYSTEM IS DESIGNED TO RUN ON BOTH MAIN SPAN MOTORS. MAIN SPAN DRIVES CANNOT BE OPERATED UNDER GENERATOR POWER. AUXILIARY SPAN DRIVE TO BE ABLE TO OPERATE ON BACKUP GENERATOR POWER.
7. REFER TO PANELBOARD SCHEDULE FOR LOAD INFORMATION.
8. UNLESS OTHERWISE NOTED, ALL CABLING BETWEEN MCCs AND MOTORS SHALL BE TYPE H AS DEFINED IN THE PLANS.

LEGEND:

FRAME AMP / TRIP AMP (XXX/XXX)	CIRCUIT BREAKER - MOLDED CASE
TVSS	TRANSIENT VOLTAGE SURGE SUPRESSOR
125	MOTOR (HORSEPOWER AS SHOWN)
P	PANELBOARD (DESIGNATION AS SHOWN)
	VARIABLE FREQUENCY DRIVE
1FVR	NEMA SIZE 1, COMBINATION CKT BREAKER AND FULL VOLTAGE REVERSING STARTER
1FVNR	NEMA SIZE 1, COMBINATION CKT BREAKER AND FULL VOLTAGE NON-REVERSING STARTER
2S3FVR	NEMA SIZE 3, COMBINATION CKT BREAKER AND FULL VOLTAGE, 2-SPEED REVERSING STARTER
(L)C	CONTACTOR, (L) FOR LIGHTING CONTACTOR, (H) FOR HEATING CONTACTOR, HEATING CONTACTOR TO HAVE COMBINATION CKT BREAKER.
30A	MOTOR DISCONNECT SWITCH, 3 POLE (RATING AS INDICATED)
BRAKE	MECHANICAL MOTOR BRAKE
(3) 480/120V	POTENTIAL TRANSFORMER (# OF PHASES AND VOLTAGE AS INDICATED)
(3) 1000:5A	CURRENT TRANSFORMER (# OF PHASES AND RATIO AS INDICATED)
480-120/208V, 3Φ, 30KVA	TRANSFORMER (RATINGS AS INDICATED)
K	KEY INTERLOCK
	STAB BUS CONNECTION

80% SUBMISSION
JANUARY 18, 2012

ARCHER WESTERN CONTRACTORS

HNTB
HNTB Corporation
The HNTB Companies
Engineers Architects Planners

SUBDIRECTORY	.DGN LOCATOR	SHEET SCALE
Plans	13678F-E04-05_1Line	NONE

STATE OF NEW HAMPSHIRE
DEPARTMENT OF TRANSPORTATION * BUREAU OF BRIDGE DESIGN

TOWN PORTSMOUTH, NH - KITTERY, ME BRIDGE NO. 247/084 STATE PROJECT 13678

LOCATION US ROUTE 1 OVER THE PISCATAQUA RIVER

ONE-LINE DIAGRAM 1

REVISIONS AFTER PROPOSAL

	BY	DATE		BY	DATE
DESIGNED	MCG	01/12	CHECKED	GP	01/12
DRAWN	GS	01/12	CHECKED	DR	01/12
QUANTITIES	XXX	XX/XX	CHECKED	XXX	XX/XX

ISSUE DATE
REV. DATE

FEDERAL PROJECT NO. BHF-T-0101(015)
SHEET NO. XXX

BRIDGE SHEET E04 OF E67
FILE NUMBER XXX-X-X
TOTAL SHEETS XXX

DATE/TIME:1/18/2012 3:32:03 PM USER:astephenson
FILE NAME:s:\FIlw00\CADD\55519_Portsmouth_Rt1_Memorial_Bridge\E1\Plans\13678F_E04-05_1Line.dgn
MODEL NAME:1_LINE
LAST SAVE:1/17/2012 12:09:04 PM

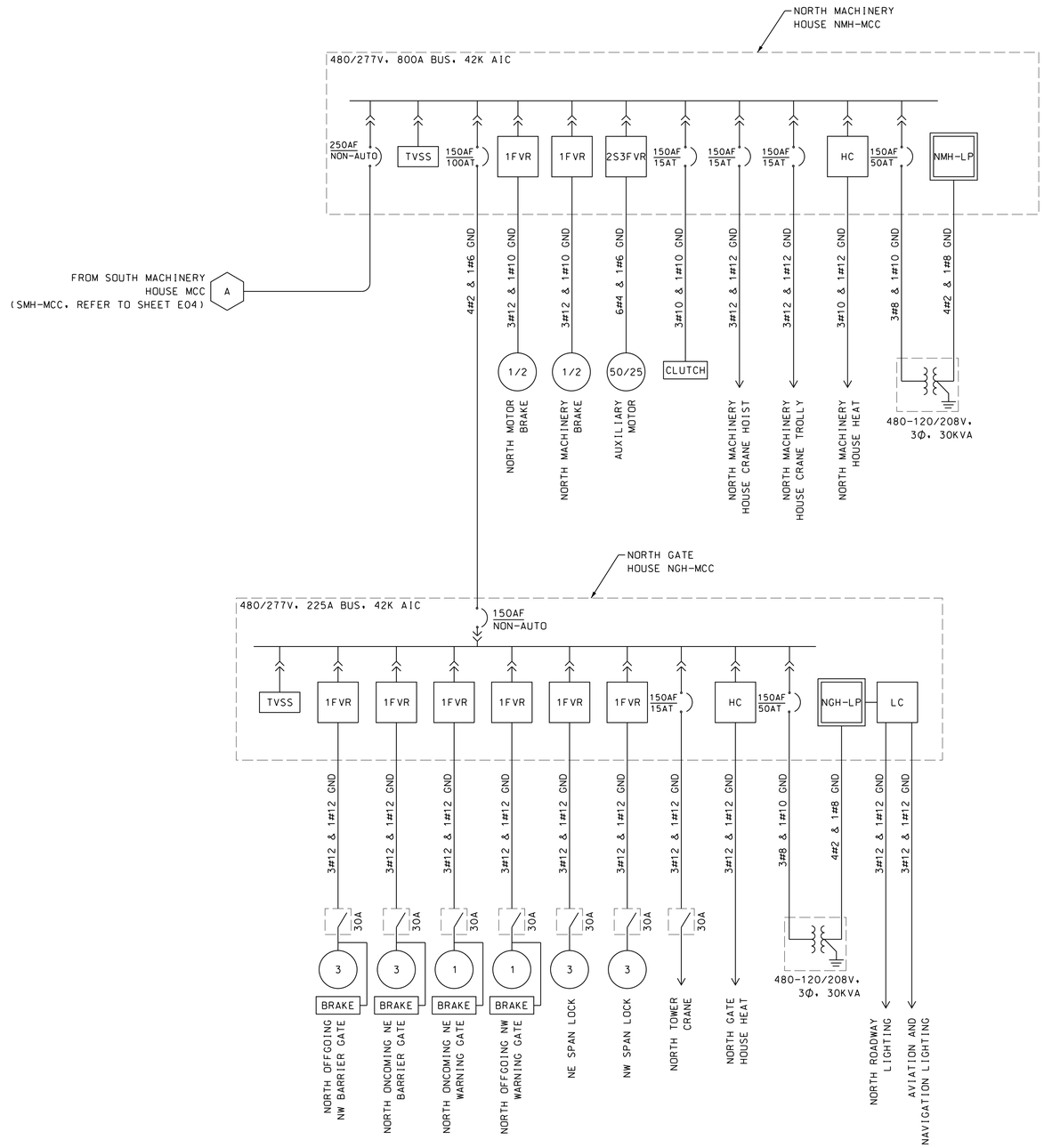

NOTES:

1. SEE NOTES AND LEGEND ON BRIDGE SHEET E04.

DATE/TIME: 1/18/2012 3:32:04 PM USER: gstephenson
FILE NAME: s:\FLW00\CADD\55519_Portsmouth_Rt1_Memorial_Bridges\Plans\13678F-E04-05_1Line.dgn
MODEL NAME: 1-LINE 2
LAST SAVE: 1/17/2012 12:09:04 PM

80% SUBMISSION
JANUARY 18, 2012

ARCHER WESTERN CONTRACTORS

HNTB
HNTB Corporation
The HNTB Companies
Engineers Architects Planners

SUBDIRECTORY	.DGN LOCATOR	SHEET SCALE
Plans	13678F-E04-05_1Line	NONE

STATE OF NEW HAMPSHIRE
DEPARTMENT OF TRANSPORTATION * BUREAU OF BRIDGE DESIGN

TOWN PORTSMOUTH, NH - KITTERY, ME BRIDGE NO. 247/084 STATE PROJECT 13678

LOCATION US ROUTE 1 OVER THE PISCATAQUA RIVER

ONE-LINE DIAGRAM 2

REVISIONS AFTER PROPOSAL				BY	DATE		BY	DATE
			DESIGNED	MCG	01/12	CHECKED	GP	01/12
			DRAWN	GS	01/12	CHECKED	DR	01/12
			QUANTITIES	XXX	XX/XX	CHECKED	XXX	XX/XX
			ISSUE DATE					
			REV. DATE					

FEDERAL PROJECT NO. BHF-T-0101(015)

SHEET NO. XXX

TOTAL SHEETS XXX

BRIDGE SHEET E05 OF E67

FILE NUMBER XXX-X-X

PRELIMINARY

CONNECTED VA PHASE A	178,800
CONNECTED VA PHASE B	179,100
CONNECTED VA PHASE C	172,700
TOTAL CONNECTED VA	530,600

CONTROL HOUSE SWITCHBOARD SCHEDULE CH-SB

480/277 VOLT, 3 PHASE, 4 WIRE, 800 AMP COPPER PHASE, NEUTRAL AND GROUND BUSES WITH 800 AMP TRIP MAIN BREAKER
BOLT-ON BRANCH CIRCUIT BREAKERS, FULLY RATED AT 100 KAIC, SURFACE MOUNTED IN A NEMA 1 ENCLOSURE

		Panel Load (VA)								Panel Load (VA)					
CRKT. #	Description	Phase A	Phase B	Phase C	Breaker Size	Poles	Conductor	CRKT. #	Description	Phase A	Phase B	Phase C	Breaker Size	Poles	Conductor
1	TVSS	0			30			2	CH-LP TRANSFORMER	15400			40	3	4 #6, 2"C
3			0					4			15700				
5				0				6				14600			
7	SOUTH GATE HOUSE MCC (SGH-MCC)	5300			40	3	5 #6, 2"C	8	SOUTH MACHINERY HOUSE MCC (SMH-MCC)	158100			600	3	3 SETS OF 4#300KCMIL, 3-3"C
9			4800					10			158600				
11				6200				12				151900			
13	POWER MONITOR EQUIPMENT							14	SPARE				N/A		
15								16	SPARE				N/A		
17								18	SPARE				N/A		
	SUM OF VOLT-AMPERE	5300	4800	6200					SUM OF VOLT-AMPERE	173500	174300	166500			

NOTES:

1. LOADS SHOWN ARE BASED ON 125% OF CONTINUOUS LOADS AND 100% OF NON-CONTINUOUS LOADS.

CONNECTED VA PHASE A	5,450
CONNECTED VA PHASE B	5,110
CONNECTED VA PHASE C	4,300
TOTAL CONNECTED VA	14,860

GENERATOR LOADCENTER SCHEDULE GEN-LC

208/120 VOLT, 3 PHASE, 4 WIRE, 225 AMP COPPER PHASE, NEUTRAL AND GROUND BUSES WITH 150 AMP TRIP MAIN BREAKER
BOLT-ON BRANCH CIRCUIT BREAKERS, FULLY RATED AT 22 KAIC, SURFACE MOUNTED IN A NEMA 12 ENCLOSURE

		Panel Load (VA)								Panel Load (VA)					
CRKT. #	Description	Phase A	Phase B	Phase C	Breaker Size	Poles	Conductor	CRKT. #	Description	Phase A	Phase B	Phase C	Breaker Size	Poles	Conductor
1	INTERIOR LIGHTING	150			20	1	3 #10, 3/4"C	2	INTERCOM	300			20	1	3 #10, 3/4"C
3	INTERIOR RECEPTACLES		360		20	1	3 #10, 3/4"C	4	CCTV CAMERA		100		20	1	3 #10, 3/4"C
5	EXTERIOR LIGHTS			500	20	1	3 #10, 3/4"C	6	FIRE ALARM			300	20	1	3 #10, 3/4"C
7	ALTERNATOR CONDENSATE HTR	100			20	1	3 #10, 3/4"C	8	JACKET WATER HEATER	1000			20	2	4 #10, 3/4"C
9	BATTERY CHARGER		400		20	1	3 #10, 3/4"C	10			1000				
11	EXHAUST FAN			500	20	1	3 #10, 3/4"C	12	ENCLOSURE HEATER			3000	20	3	4 #10, 3/4"C
13	INTAKE/EXHAUST LOUVERS	900			20	1	3 #10, 3/4"C	14		3000					
15	LOAD BANK CONTROLLER		250		20	1	3 #10, 3/4"C	16			3000				
17	SPARE				N/A			18	SPARE				N/A		
19	SPARE				N/A			20	SPARE				N/A		
21	SPARE				N/A			22	SPARE				N/A		
23	SPARE				N/A			24	SPARE				N/A		
	SUM OF VOLT-AMPERE	1150	1010	1000					SUM OF VOLT-AMPERE	4300	4100	3300			

CONNECTED VA PHASE A	15,052
CONNECTED VA PHASE B	10,856
CONNECTED VA PHASE C	14,116
TOTAL CONNECTED VA	40,024

CONTROL HOUSE LIGHTING PANEL SCHEDULE CH-LP

208/120 VOLT, 3 PHASE, 4 WIRE, 225 AMP COPPER PHASE, NEUTRAL AND GROUND BUSES WITH 150 AMP TRIP MAIN BREAKER
BOLT-ON BRANCH CIRCUIT BREAKERS, FULLY RATED AT 22 KAIC, SURFACE MOUNTED IN A NEMA 12 ENCLOSURE

		Panel Load (VA)								Panel Load (VA)					
CRKT. #	Description	Phase A	Phase B	Phase C	Breaker Size	Poles	Conductor	CRKT. #	Description	Phase A	Phase B	Phase C	Breaker Size	Poles	Conductor
1	UPPER LEVEL LIGHTING	792			20	1	3 #10, 3/4"C	2	ELECTRIC FURNACE	5000			60	3	4 #6, 1"C
3	MECHANICAL ROOM LIGHTING		240		20	1	3 #10, 3/4"C	4			5000				
5	OPERATOR LEVEL LIGHTING			396	20	1	3 #10, 3/4"C	6				5000			
7	RESTROOM LTG & RECEPTACLE	460			20	1	3 #10, 3/4"C	8	AIR HANDLER	1090			15	2	3 #12, 3/4"C
9	LOWER LEVEL LIGHTING		500		20	1	3 #10, 3/4"C	10			1090				
11	MECH ROOM RECEPTACLES			750	20	1	3 #10, 3/4"C	12	CONDENSER UNIT			2270	40	2	3 #8, 3/4"C
13	OPERATOR LEVEL RECEPTS	500			20	1	3 #10, 3/4"C	14		2270					
15	KITCHEN RECEPTACLE		500		20	1	3 #10, 3/4"C	16	HEAT TRACE (WATER/SEWER)		1800		40 - GFI	3	4 #8, 1-3/4"C
17	REFRIGERATOR RECEPTACLE			300	20	1	3 #10, 3/4"C	18				1800			
19	MICROWAVE	1440			20	1	3 #10, 3/4"C	20		1800					
21	CONDENSATE PUMP		78		20	1	3 #10, 3/4"C	22	PLC UPS			300	20	1	3 #12, 3/4"C
23	WATER HEATER			2500	30	1	3 #10, 3/4"C	24	CONTROL POWER	400			20	1	3 #12, 3/4"C
25	INTERCOM	300			20	1	3 #10, 3/4"C	26	AIR HORN		1248		20	1	3 #12, 3/4"C
27	CONTROL PANEL		400		20	1	3 #10, 3/4"C	28	COMMUNICATION CABINET			500	20	1	3 #12, 3/4"C
29	FIRE ALARM			300	20	1	3 #10, 3/4"C	30	SPARE				N/A		
31	CCTV CAMERAS (2,6,9,10)	1000			20	1	3 #10, 3/4"C	32	SPARE				N/A		
33	SPARE				N/A			34	SPARE				N/A		
35	SPARE				N/A			36	SPARE				N/A		
37	SPARE				N/A			38	SPARE				N/A		
39	SPARE				N/A			40	SPARE				N/A		
41	SPARE				N/A			42	SPARE				N/A		
	SUM OF VOLT-AMPERE	4492	1718	4246					SUM OF VOLT-AMPERE	10560	9138	9870			

80% SUBMISSION
JANUARY 18, 2012

ARCHER WESTERN CONTRACTORS

HNTB
HNTB Corporation
The HNTB Companies
Engineers Architects Planners

SUBDIRECTORY	.DGN LOCATOR	SHEET SCALE
Plans	13678F-E06-07_PnlSch	NONE

STATE OF NEW HAMPSHIRE
DEPARTMENT OF TRANSPORTATION * BUREAU OF BRIDGE DESIGN

TOWN PORTSMOUTH, NH - KITTERY, ME BRIDGE NO. 247/084 STATE PROJECT 13678
LOCATION US ROUTE 1 OVER THE PISCATAQUA RIVER

PANELBOARD SCHEDULE 1

REVISIONS AFTER PROPOSAL		BY	DATE		BY	DATE
	DESIGNED	MCG	12/11	CHECKED	GP	12/11
	DRAWN	GS	12/11	CHECKED	DR	12/11
	QUANTITIES	XXX	XX/XX	CHECKED	XXX	XX/XX
	ISSUE DATE					
	REV. DATE					

FEDERAL PROJECT NO. BHF-T-0101(015)
SHEET NO. XXX
TOTAL SHEETS XXX
BRIDGE SHEET E06 OF E67
FILE NUMBER XXX-X-X

DATE/TIME: 1/18/2012 3:32:05 PM USER: gstephenson
FILE NAME: s:\FFLW00\CADD\55519_Portsmouth_Rt1_Memorial_Bridge\Plans\13678F-E06-07_PnlSch.dgn
MODEL NAME: PB SCH 1
LAST SAVE: 1/17/2012 11:18:50 AM

NOTES:

1. SEE NOTES ON ELECTRICAL SHEET E06.

SOUTH MACHINERY HOUSE LIGHTING PANEL SCHEDULE SMH-LP

CONNECTED VA PHASE A	9,088
CONNECTED VA PHASE B	5,600
CONNECTED VA PHASE C	3,900
TOTAL CONNECTED VA	18,588

208/120 VOLT, 3 PHASE, 4 WIRE, 225 AMP COPPER PHASE, NEUTRAL AND GROUND BUSES WITH 150 AMP TRIP MAIN BREAKER
BOLT-ON BRANCH CIRCUIT BREAKERS, FULLY RATED AT 22 KAIC, SURFACE MOUNTED IN A NEMA 12 ENCLOSURE

		Panel Load (VA)								Panel Load (VA)					
CRKT. #	Description	Phase A	Phase B	Phase C	Breaker Size	POLES	CONDUCTOR	CRKT. #	Description	Phase A	Phase B	Phase C	Breaker Size	POLES	CONDUCTOR
1	MACHINERY ROOM LIGHTING	448			20	1	3 #10, 3/4"C	2	INTERCOM	300			20	1	3 #10, 3/4"C
3	WEST WALKWAY LIGHTING		300		20	1	3 #10, 3/4"C	4	CCTV CAMERA (8,9,11,12)		900		20	1	3 #10, 3/4"C
5	EAST WALKWAY LIGHTING			300	20	1	3 #10, 3/4"C	6	FIRE ALARM			300	20	1	3 #10, 3/4"C
7	SPAN ROADWAY LIGHTING	300			20	1	3 #10, 3/4"C	8	SPAN CONTROL	400			20	1	3 #10, 3/4"C
9	NAVIGATION LTG			200	20	1	3 #10, 3/4"C	10	BYPASS CONTROL		400		20	1	3 #10, 3/4"C
11	RECEPTACLES	1440			20	1	3 #10, 3/4"C	12	MAIN DRIVE MOTOR HEATERS			400	20	1	3 #10, 3/4"C
13	COMMUNICATION CABINET		500		20	1	3 #10, 3/4"C	14	MCC CABINET HEATERS	300			20	1	3 #10, 3/4"C
15	LTG CONTACTOR CONTROL			100	20	1	3 #10, 3/4"C	16	ROTARTY CAM SWITCH		100		20	1	3 #10, 3/4"C
17	MACH ROOM HEATER UH-IA	2500			30	2	4 #10, 3/4"C	18	RESOLVER DECODER POWER			100	20	1	3 #10, 3/4"C
19			2500					20	EAST SIDE RECEPTACLES	900			20	1	3 #10, 3/4"C
21	MACH ROOM HEATER UH-IB			2500	30	2	4 #10, 3/4"C	22	UTILITY RECEPTACLES		900		20	1	3 #10, 3/4"C
23		2500						24	SPARE				N/A		
25	SPARE				N/A			26	SPARE				N/A		
27	SPARE				N/A			28	SPARE				N/A		
29	SPARE				N/A			30	SPARE				N/A		
31	SPARE				N/A			32	SPARE				N/A		
33	SPARE				N/A			34	SPARE				N/A		
35	SPARE				N/A			36	SPARE				N/A		
37	SPARE				N/A			38	SPARE				N/A		
39	SPARE				N/A			40	SPARE				N/A		
41	SPARE				N/A			42	SPARE				N/A		
	SUM OF VOLT-AMPERE	7188	3300	3100					SUM OF VOLT-AMPERE	1900	2300	800			

SOUTH GATE HOUSE LIGHTING PANEL SCHEDULE SGH-LP

CONNECTED VA PHASE A	4,317
CONNECTED VA PHASE B	4,080
CONNECTED VA PHASE C	5,015
TOTAL CONNECTED VA	13,412

208/120 VOLT, 3 PHASE, 4 WIRE, 225 AMP COPPER PHASE, NEUTRAL AND GROUND BUSES WITH 150 AMP TRIP MAIN BREAKER
BOLT-ON BRANCH CIRCUIT BREAKERS, FULLY RATED AT 22 KAIC, SURFACE MOUNTED IN A NEMA 12 ENCLOSURE

		Panel Load (VA)								Panel Load (VA)					
CRKT. #	Description	Phase A	Phase B	Phase C	Breaker Size	POLES	CONDUCTOR	CRKT. #	Description	Phase A	Phase B	Phase C	Breaker Size	POLES	CONDUCTOR
1	GATE HOUSE LIGHTING	160			20	1	3 #10, 3/4"C	2	PIER LIGHTS	600			20	1	3 #10, 3/4"C
3	FAA OBSTRCTN LTS L810		280		20	1	3 #10, 3/4"C	4	PIER RECEPTACLES		540		20	1	3 #10, 3/4"C
5	FAA OBSTRCTN LTS L864			200	20	1	3 #10, 3/4"C	6	HEATER			1125	20	2	3 #10, 3/4"C
7	INTERCOM	300			20	1	3 #10, 3/4"C	8		1125					
9	FIRE ALARM		300		20	1	3 #10, 3/4"C	10	HEAT PUMP		1440		20	2	3 #10, 3/4"C
11	GATE FLASHERS			270	20	1	3 #10, 3/4"C	12				1440			
13	GATE HEATERS	270			20	1	3 #10, 3/4"C	14	HEAT PUMP EVAPORATOR	112			20	1	3 #10, 3/4"C
15	BARRIER FLASHERS		180		20	1	3 #10, 3/4"C	16	GATE HOUSE RECEPTACLES		540		20	1	3 #10, 3/4"C
17	BARRIER HEATERS			180	20	1	3 #10, 3/4"C	18	COMMUNICATIONS CABINET			500	20	1	3 #10, 3/4"C
19	CCTV CAMERAS	1000			20	1	3 #10, 3/4"C	20	CHANNEL MARKER LIGHTS	300			20	1	3 #10, 3/4"C
21	CONTROL POWER		500		20	1	3 #10, 3/4"C	22	ROADWAY LIGHTING		300		20	1	3 #10, 3/4"C
23	TRAFFIC SIGNALS			100	20	1	3 #10, 3/4"C	24	SOUTH TOWER STAIRWAY LTG			1200	20	1	3 #10, 3/4"C
25	EQUIPMENT CABINET HEATERS	300			20	1	3 #10, 3/4"C	26	COUNTERWEIGHT WARNG SYS	150			20	1	3 #10, 3/4"C
27	SPARE				N/A			28	SPARE				N/A		
29	SPARE				N/A			30	SPARE				N/A		
31	SPARE				N/A			32	SPARE				N/A		
33	SPARE				N/A			34	SPARE				N/A		
35	SPARE				N/A			36	SPARE				N/A		
37	SPARE				N/A			38	SPARE				N/A		
39	SPARE				N/A			40	SPARE				N/A		
41	SPARE				N/A			42	SPARE				N/A		
	SUM OF VOLT-AMPERE	2030	1260	750					SUM OF VOLT-AMPERE	2287	2820	4265			

NORTH MACHINERY HOUSE LIGHTING PANEL SCHEDULE NMH-LP

CONNECTED VA PHASE A	5,198
CONNECTED VA PHASE B	9,040
CONNECTED VA PHASE C	3,900
TOTAL CONNECTED VA	18,138

208/120 VOLT, 3 PHASE, 4 WIRE, 225 AMP COPPER PHASE, NEUTRAL AND GROUND BUSES WITH 150 AMP TRIP MAIN BREAKER
BOLT-ON BRANCH CIRCUIT BREAKERS, FULLY RATED AT 22 KAIC, SURFACE MOUNTED IN A NEMA 12 ENCLOSURE

		Panel Load (VA)								Panel Load (VA)					
CRKT. #	Description	Phase A	Phase B	Phase C	Breaker Size	POLES	CONDUCTOR	CRKT. #	Description	Phase A	Phase B	Phase C	Breaker Size	POLES	CONDUCTOR
1	MACHINERY ROOM LIGHTING	448			20	1	3 #10, 3/4"C	2	INTERCOM	300			20	1	3 #10, 3/4"C
3	WEST WALKWAY LIGHTING		300		20	1	3 #10, 3/4"C	4	CCTV CAMERA		900		20	1	3 #10, 3/4"C
5	EAST WALKWAY LIGHTING			300	20	1	3 #10, 3/4"C	6	FIRE ALARM			300	20	1	3 #10, 3/4"C
7	WORKER ON BRIDGE	250			20	1	3 #10, 3/4"C	8	SPAN CONTROL	400			20	1	3 #10, 3/4"C
9	WEST SIDE RECEPTACLES		1440		20	1	3 #10, 3/4"C	10	BYPASS CONTROL		400		20	1	3 #10, 3/4"C
11	COMMUNICATION CABINET			500	20	1	3 #10, 3/4"C	12	MAIN DRIVE MOTOR HEATERS			200	20	1	3 #10, 3/4"C
13	LTG CONTACTOR CONTROL	100			20	1	3 #10, 3/4"C	14	MCC CABINET HEATERS	300			20	1	3 #10, 3/4"C
15	MACH ROOM HEATER UH-IC		2500		30	2	4 #10, 3/4"C	16	ROTARTY CAM SWITCH		100		20	1	3 #10, 3/4"C
17				2500				18	RESOLVER DECODER POWER			100	20	1	3 #10, 3/4"C
19	MACH ROOM HEATER UH-ID	2500			30	2	4 #10, 3/4"C	20	EAST SIDE RECEPTACLES	900			20	1	3 #10, 3/4"C
21			2500					22	UTILITY RECEPTACLES		900		20	1	3 #10, 3/4"C
23	SPARE				N/A			24	SPARE				N/A		
25	SPARE				N/A			26	SPARE				N/A		
27	SPARE				N/A			28	SPARE				N/A		
29	SPARE				N/A			30	SPARE				N/A		
31	SPARE				N/A			32	SPARE				N/A		
33	SPARE				N/A			34	SPARE				N/A		
35	SPARE				N/A			36	SPARE				N/A		
37	SPARE				N/A			38	SPARE				N/A		
39	SPARE				N/A			40	SPARE				N/A		
41	SPARE				N/A			42	SPARE				N/A		
	SUM OF VOLT-AMPERE	3298	6740	3300					SUM OF VOLT-AMPERE	1900	2300	600			

NORTH GATE HOUSE LIGHTING PANEL SCHEDULE NGH-LP

CONNECTED VA PHASE A	4,285
CONNECTED VA PHASE B	4,150
CONNECTED VA PHASE C	5,015
TOTAL CONNECTED VA	13,450

208/120 VOLT, 3 PHASE, 4 WIRE, 225 AMP COPPER PHASE, NEUTRAL AND GROUND BUSES WITH 150 AMP TRIP MAIN BREAKER
BOLT-ON BRANCH CIRCUIT BREAKERS, FULLY RATED AT 22 KAIC, SURFACE MOUNTED IN A NEMA 12 ENCLOSURE

		Panel Load (VA)								Panel Load (VA)					
CRKT. #	Description	Phase A	Phase B	Phase C	Breaker Size	POLES	CONDUCTOR	CRKT. #	Description	Phase A	Phase B	Phase C	Breaker Size	POLES	CONDUCTOR
1	GATE HOUSE LIGHTING	128			20	1	3 #10, 3/4"C	2	PIER LIGHTS	600			20	1	3 #10, 3/4"C
3	FAA OBSTRCTN LTS L810		280		20	1	3 #10, 3/4"C	4	PIER RECEPTACLES		500		20	1	3 #10, 3/4"C
5	FAA OBSTRCTN LTS L864			200	20	1	3 #10, 3/4"C	6	HEATER			1125	20	2	4 #10, 3/4"C
7	INTERCOM	300			20	1	3 #10, 3/4"C	8		1125					
9	FIRE ALARM		300		20	1	3 #10, 3/4"C	10	HEAT PUMP		1440		20	2	4 #10, 3/4"C
11	GATE FLASHERS			270	20	1	3 #10, 3/4"C	12				1440			
13	GATE HEATERS	270			20	1	3 #10, 3/4"C	14	HEAT PUMP EVAPORATOR	112			20	1	3 #10, 3/4"C
15	BARRIER FLASHERS		180		20	1	3 #10, 3/4"C	16	GATE HOUSE RECEPTACLES		500		20	1	3 #10, 3/4"C
17	BARRIER HEATERS			180	20	1	3 #10, 3/4"C	18	COMMUNICATIONS CABINET			500	20	1	3 #10, 3/4"C
19	CCTV CAMERAS	1000			20	1	3 #10, 3/4"C	20	CHANNEL MARKER LIGHTS	300			20	1	3 #10, 3/4"C
21	CONTROL POWER		500		20	1	3 #10, 3/4"C	22	ROADWAY LIGHTING		450		20	1	3 #10, 3/4"C
23	TRAFFIC SIGNALS			100	20	1	3 #10, 3/4"C	24	NORTH TOWER STAIRWAY LTG			1200	20	1	3 #10, 3/4"C
25	EQUIPMENT CABINET HEATERS	300			20	1	3 #10, 3/4"C	26	COUNTERWEIGHT WARNG SYS	150			20	1	3 #10, 3/4"C
27	SPARE				N/A			28	SPARE				N/A		
29	SPARE				N/A			30	SPARE				N/A		
31	SPARE				N/A			32	SPARE				N/A		
33	SPARE				N/A			34	SPARE				N/A		
35	SPARE				N/A			36	SPARE				N/A		
37	SPARE				N/A			38	SPARE				N/A		
39	SPARE				N/A			40	SPARE				N/A		
41	SPARE				N/A			42	SPARE				N/A		
	SUM OF VOLT-AMPERE	1998	1260	750					SUM OF VOLT-AMPERE	2287	2890	4265			

80% SUBMISSION
JANUARY 18, 2012

ARCHER WESTERN CONTRACTORS

HNTB
HNTB Corporation
The HNTB Companies
Engineers Architects Planners

SUBDIRECTORY	.DGN LOCATOR	SHEET SCALE
Plans	13678F-E06-07_PnlSch	NONE

STATE OF NEW HAMPSHIRE
DEPARTMENT OF TRANSPORTATION * BUREAU OF BRIDGE DESIGN

TOWN PORTSMOUTH, NH - KITTERY, ME BRIDGE NO. 247\084 STATE PROJECT 13678

LOCATION US ROUTE 1 OVER THE PISCATAQUA RIVER

PANELBOARD SCHEDULE 2

REVISIONS AFTER PROPOSAL		BY	DATE		BY	DATE
	DESIGNED	MCG	12/11	CHECKED	GP	12/11
	DRAWN	GS	12/11	CHECKED	DR	12/11
	QUANTITIES	XXX	XX/XX	CHECKED	XXX	XX/XX

ISSUE DATE	FEDERAL PROJECT NO.	SHEET NO.	TOTAL SHEETS
REV. DATE	BHF-T-0101(015)	XXX	XXX

BRIDGE SHEET E07 OF E67

FILE NUMBER XXX-X-X

DATE/TIME:1/18/2012 3:32:21 PM USER:gstephenson
FILE NAME:s:\FFLw00\CADD\55519_Portsmouth_Rt1_Memorial_Bridges\Plans\13678F-E06-07_PnlSch.dgn
MODEL NAME:PB SCH 2
LAST SAVE:1/17/2012 11:18:50 AM

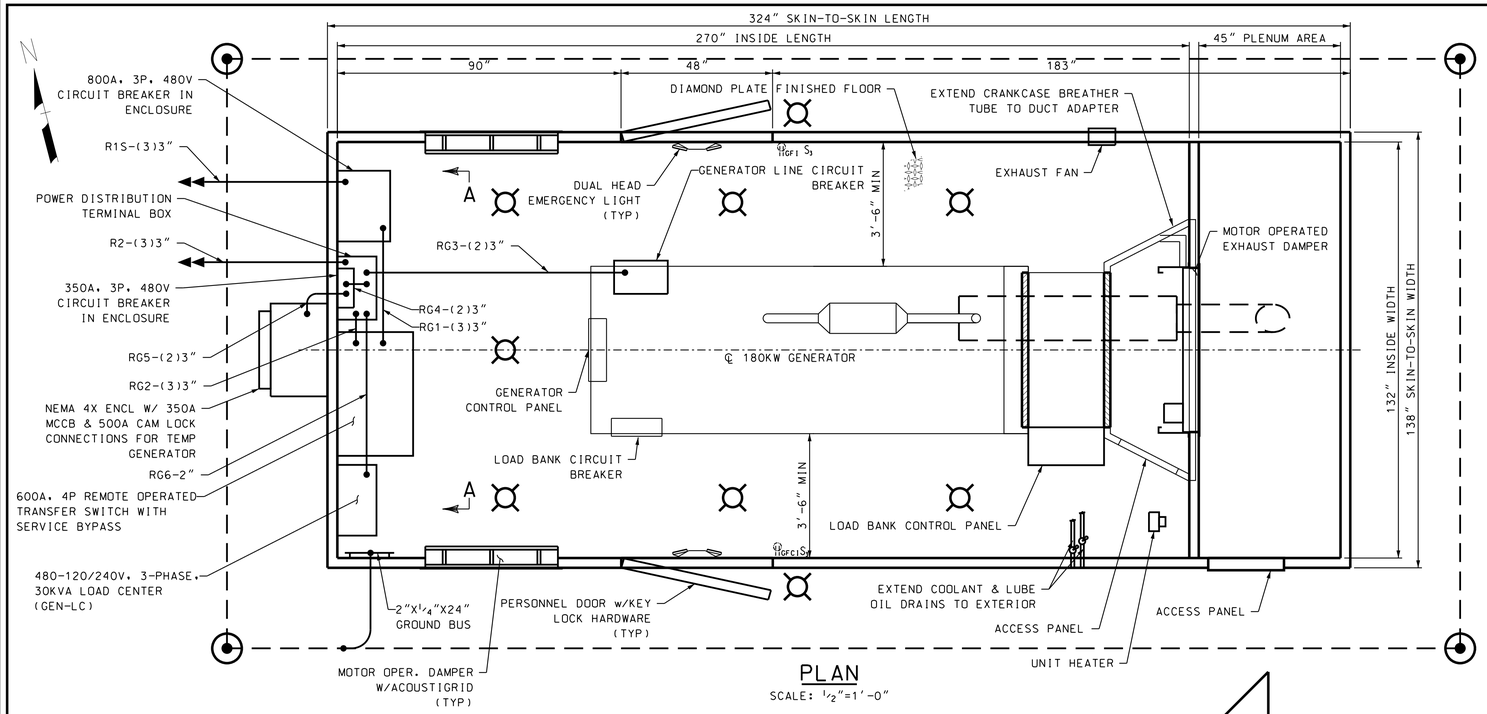

PLAN

SCALE: 1/2"=1'-0"

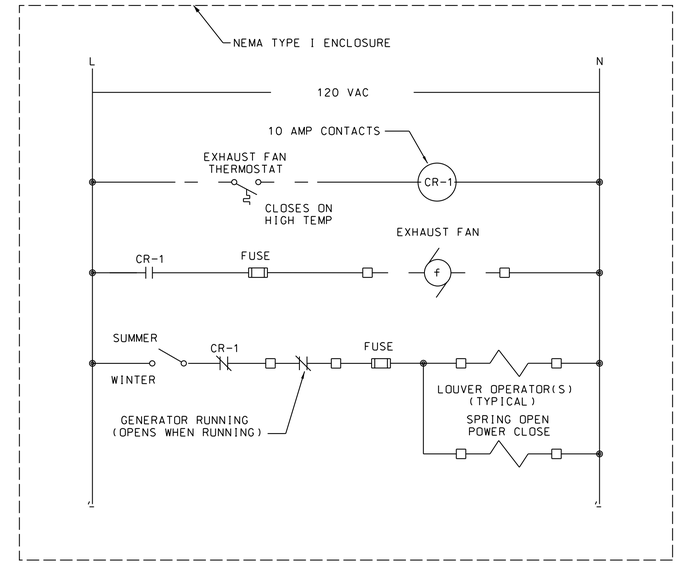

GENERATOR ENCLOSURE EXHAUST FAN / INTAKE LOUVER(S) CONTROL WIRING DIAGRAM

N.T.S.

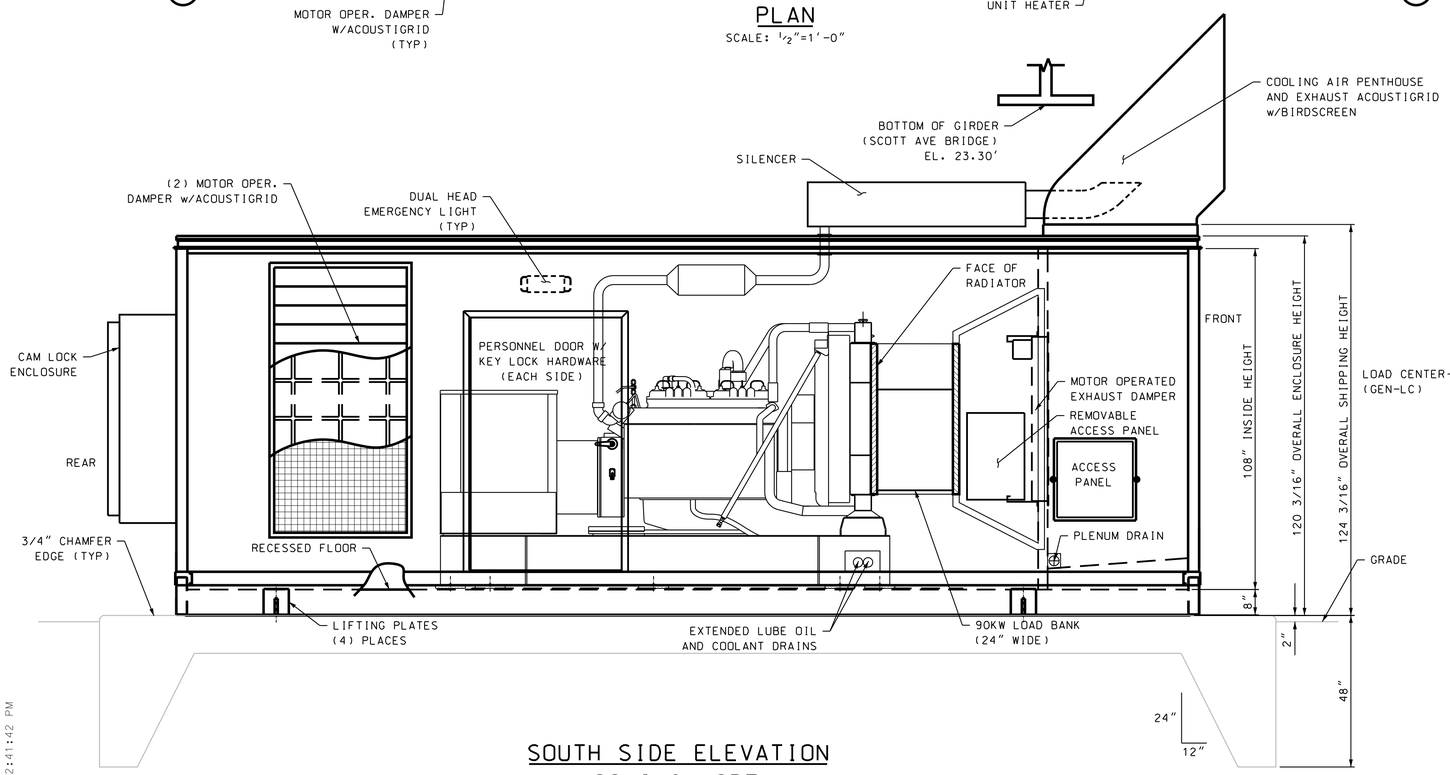

SOUTH SIDE ELEVATION (LOOKING NORTH)

SCALE: 1/2"=1'-0"

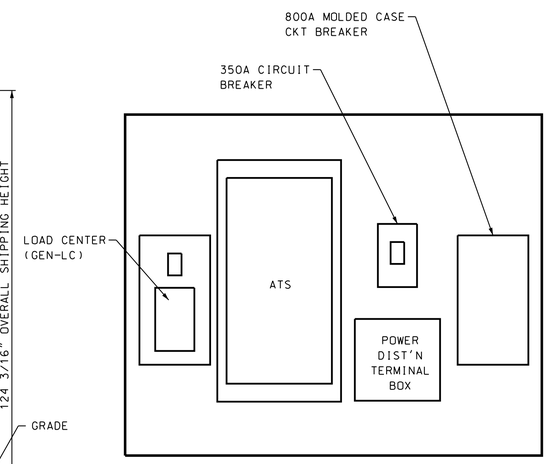

ELEVATION A-A

SCALE: 1/2"=1'-0"

NOTES:

NATURAL GAS SERVICE NOTES:

1. THE CONTRACTOR SHALL EMPLOY THE SERVICES OF A LICENSED PLUMBER AND ADHERE TO ALL LOCAL CODES ASSOCIATED WITH THE AHJ, TO INSTALL GALVANIZED BLACK IRON PIPE, VALVES, BRASS FLEXIBLE LINES, DRIP LEGS, STRAINERS, REGULATORS AND OTHER EQUIPMENT TO ALLOW FOR A NATURAL GAS SERVICE TO THE GENERATOR. THE CONTRACTOR SHALL INCLUDE ALL PERMITS AND FEES ASSOCIATED WITH THIS WORK. THE GAS PIPE SHALL ROUTE ABOVE GROUND FROM GAS METER SHOWN ON THE SCOTT AVENUE BRIDGE UTILITY PLANS TO THE GENERATOR ENCLOSURE. THE PIPE SHALL ENTER THE ENCLOSURE USING AN EQUIPMENT SUPPLIER TRIM COLLAR. THE PENETRATION SHALL BE SEALED TO PREVENT ENTRANCE OF WATER AND RODENTS.

INSTALLATION NOTES:

2. ALL DIMENSIONS SHOW ARE APPROXIMATE AND VARY WITH DIFFERENT SUPPLIERS. THE CONTRACTOR SHALL INSTALL ALL EQUIPMENT, PADS, AND DEVICES BASED ON APPROVED CERTIFIED SHOP DRAWINGS.
3. SPECIAL EQUIPMENT MAY BE REQUIRED FOR INSTALLATION OF THE GENERATOR UNDER THE SCOTT AVENUE BRIDGE. THE CONTRACTOR SHALL REFER TO THE SCOTT AVENUE BRIDGE SHEETS FOR DETAILS. ALL COSTS FOR SPECIAL EQUIPMENT AND RIGGING SHALL BE INCLUDED.
4. SEE SPECIFICATIONS FOR DETAILED SPECIFICS ON MATERIAL, DESIGN, INSTALLATION AND CONSTRUCTION CRITERIA FOR THE BACKUP GENERATOR AND ENCLOSURE.

80% SUBMISSION
JANUARY 18, 2012

ARCHER WESTERN CONTRACTORS

HNTB
HNTB Corporation
The HNTB Companies
Engineers Architects Planners

SUBDIRECTORY	.DGN LOCATOR	SHEET SCALE
Plans	13678F-E08_GenSet	AS SHOWN

STATE OF NEW HAMPSHIRE
DEPARTMENT OF TRANSPORTATION * BUREAU OF BRIDGE DESIGN

TOWN PORTSMOUTH, NH - KITTERY, ME BRIDGE NO. 247/084 STATE PROJECT 13678
LOCATION US ROUTE 1 OVER THE PISCATAQUA RIVER

GENERATOR DETAILS

REVISIONS AFTER PROPOSAL		BY	DATE		BY	DATE
	DESIGNED	MCG	01/12	CHECKED	GP	01/12
	DRAWN	MDC	01/12	CHECKED	DR	01/12
	QUANTITIES	XXX	XX/XX	CHECKED	XXX	XX/XX

ISSUE DATE	FEDERAL PROJECT NO.	SHEET NO.	TOTAL SHEETS
REV. DATE	BHF-T-0101(015)	XXX	XXX

BRIDGE SHEET E08 OF E67
FILE NUMBER XXX-X-X

DATE/TIME:1/18/2012 3:32:48 PM USER:gstephenson
FILE NAME:s:\FFL_w00sCADD\55519_Portsmouth_Rt1_Memorial_Bridges\Plans\13678F-E08_GenSet.dgn
MODEL NAME:PLAN_1
LAST SAVE:1/18/2012 2:41:42 PM

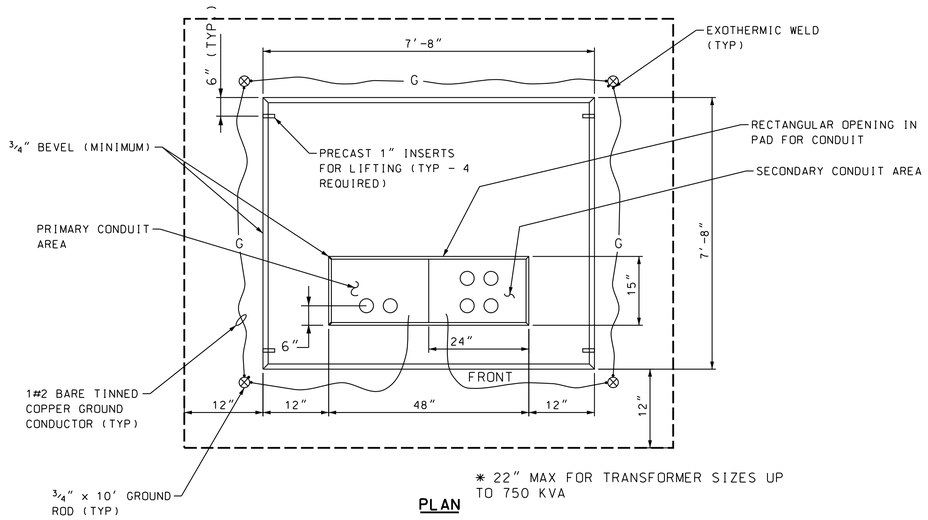

* 22" MAX FOR TRANSFORMER SIZES UP TO 750 KVA

PLAN

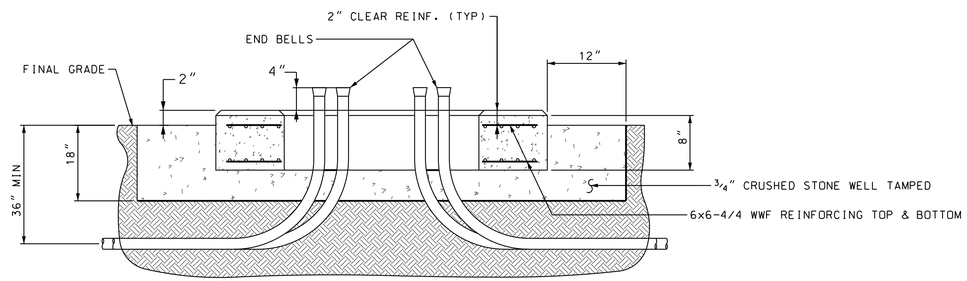

APPROXIMATE WEIGHT = 4450 POUNDS
CONCRETE = 1.1 CUBIC YARDS

ELEVATION

FIELD - POURED TRANSFORMER PAD

NOT TO SCALE

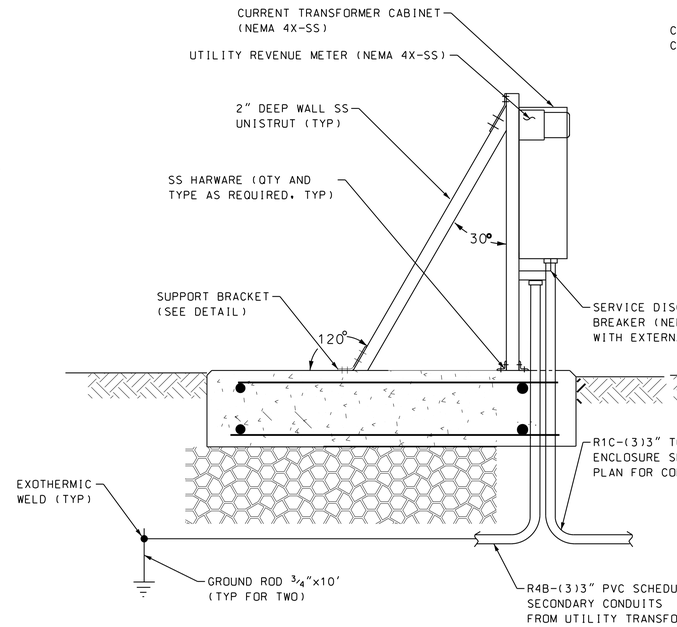

SERVICE ENTRANCE EQUIPMENT - SIDE VIEW

NOT TO SCALE

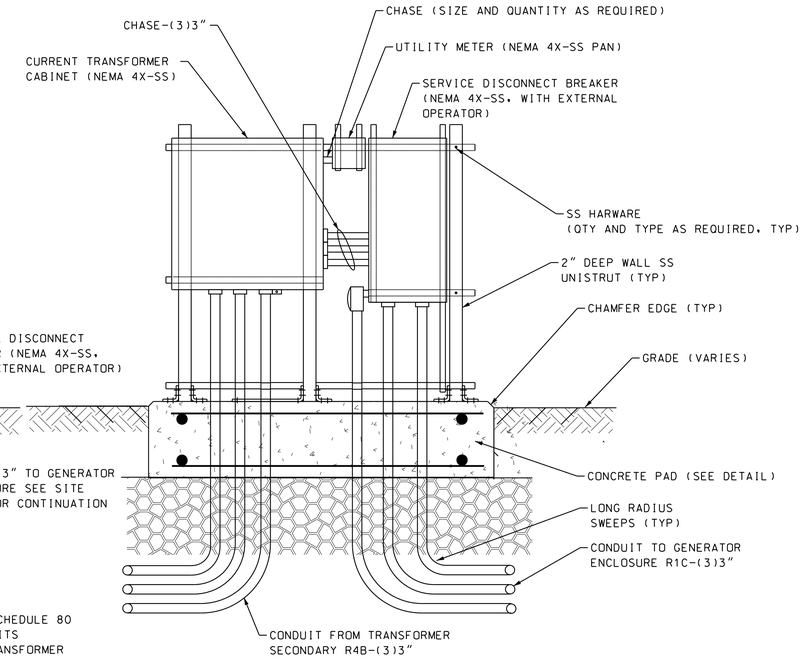

SERVICE ENTRANCE EQUIPMENT - ELEVATION

NOT TO SCALE

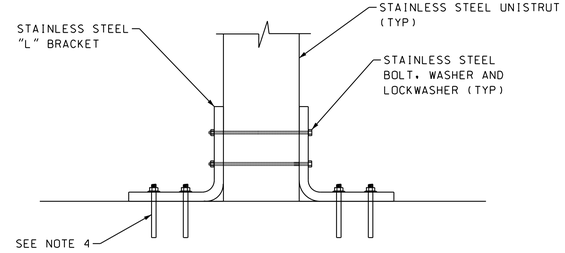

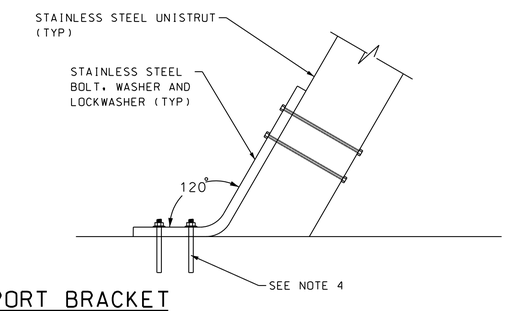

STAINLESS STEEL - SUPPORT BRACKET

NOT TO SCALE

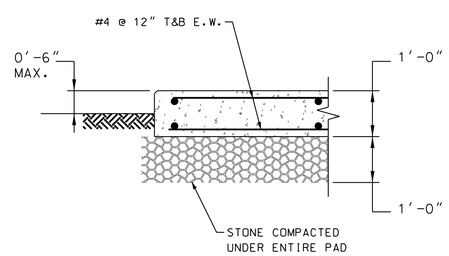

CONCRETE PAD DETAIL

NOT TO SCALE

UTILITY NOTE:

1. TRANSFORMER PAD SHALL BE AS REQUIRED BY THE UTILITY. SEE UTILITY CONSTRUCTION STANDARDS. CONTRACTOR SHALL INSTALL TRANSFORMER PAD AND CONDUIT AND SHALL PULL AND COIL WIRES FROM THE SERVICE DISCONNECT BREAKER TO THE PAD FOR TERMINATION BY THE UTILITY COMPANY.
2. THE CONCRETE PAD SHALL BE BONDED TO A GROUND GRID.
3. TEMPORARY ELECTRIC SERVICE SHALL BE PROVIDED DURING CONSTRUCTION TO MAINTAIN ALL MARINE AND AVIATION LIGHTING AT ALL TIMES.

CONCRETE PAD NOTES:

1. THE SERVICE ENTRANCE EQUIPMENT PAD SHALL CONFORM TO A.C.I. 318-02 "BUILDING CODE" AND "A.C.I. DETAILING MANUAL" ACI SP66(94).
2. ALL CONCRETE SHALL HAVE A COMPRESSIVE STRENGTH OF 4,000 PSI. THIS CONCRETE SHALL HAVE A MINIMUM TYPE II CEMENT CONTENT OF 6.5 BAGS PER CUBIC YARD. 5.0 GALLONS OF WATER PER BAG (W/C=0.45) & 6%+/- AIR ENTRAINMENT SUCH THAT THE HARDENED WEIGHT IS 145% +/- LBS/CUBIC FOOT.
3. ALL REINFORCING STEEL SHALL HAVE A MINIMUM YIELD STRENGTH OF Fy=60 KSI. ALSO SHALL BE NEW DEFORMED EPOXY COATED BILLET-STEEL CONFORMING TO ASTM A615-01b GRADE 60.
4. SECURE TO CONCRETE PAD VIA EPOXY TYPE ANCHOR BOLTS, WITH MINIMUM 6" EMBEDMENT. QUANTITY AND SIZE AS REQUIRED.

80% SUBMISSION
JANUARY 18, 2012

ARCHER WESTERN CONTRACTORS

HNTB
HNTB Corporation
The HNTB Companies
Engineers Architects Planners

SUBDIRECTORY	.DGN LOCATOR	SHEET SCALE
Plans	3678F-E09_ElecSvcDtls	1" = 50'-0"

STATE OF NEW HAMPSHIRE
DEPARTMENT OF TRANSPORTATION * BUREAU OF BRIDGE DESIGN

TOWN PORTSMOUTH, NH - KITTERY, ME | BRIDGE NO. 247/084 | STATE PROJECT 13678
LOCATION US ROUTE 1 OVER THE PISCATAQUA RIVER

UTILITY SERVICE DETAILS

REVISIONS AFTER PROPOSAL		BY	DATE		BY	DATE
	DESIGNED	MCG	01/12	CHECKED	XXX	01/12
	DRAWN	GS	01/12	CHECKED	DR	01/12
	QUANTITIES	XXX	XXX	CHECKED	XXX	XXX
	ISSUE DATE		FEDERAL PROJECT NO.		SHEET NO.	
	REV. DATE		BHF-T-0101(015)		XXX	

BRIDGE SHEET E09 OF E67
FILE NUMBER XXX-X-X
TOTAL SHEETS XXX

DATE/TIME: 1/18/2012 3:32:48 PM USER: gstephenson
FILE NAME: s:\FFL\WOOxCADD\55519_Portsmouth_R+1_Memorial_Bridge\Plans\13678F-E09_ElecSvcDtls.dgn
MODEL NAME: PLAN
LAST SAVE: 1/18/2012 9:02:45 AM

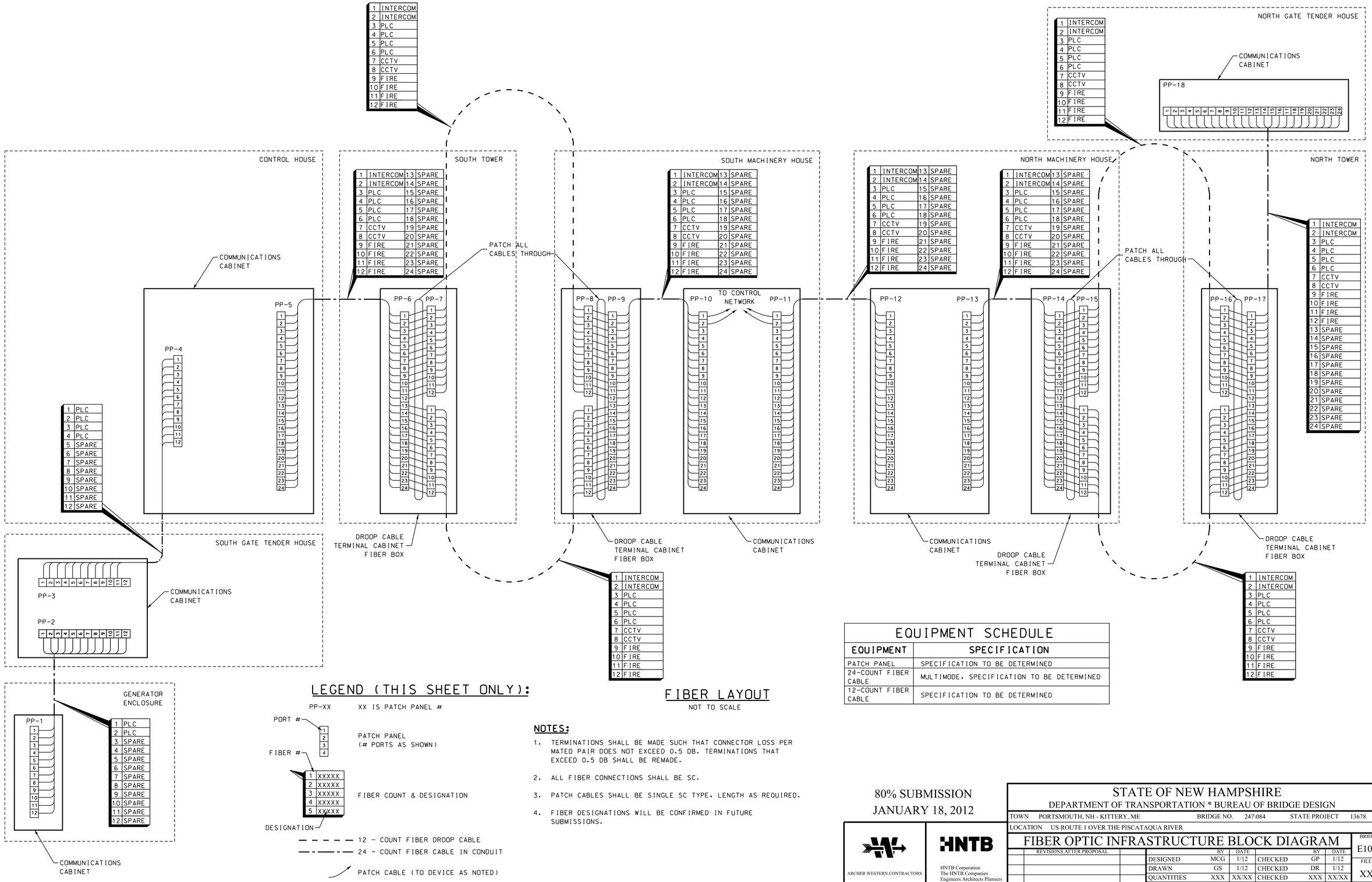

EQUIPMENT SCHEDULE

EQUIPMENT	SPECIFICATION
PATCH PANEL	SPECIFICATION TO BE DETERMINED
24-COUNT FIBER CABLE	MULTIMODE, SPECIFICATION TO BE DETERMINED
12-COUNT FIBER CABLE	SPECIFICATION TO BE DETERMINED

LEGEND (THIS SHEET ONLY):

PP-XX — XX IS PATCH PANEL #

PORT # — PATCH PANEL (# PORTS AS SHOWN)

FIBER # — FIBER COUNT & DESIGNATION

DESIGNATION

12 - COUNT FIBER DROOP CABLE

24 - COUNT FIBER CABLE IN CONDUIT

PATCH CABLE (TO DEVICE AS NOTED)

FIBER LAYOUT

NOT TO SCALE

NOTES:

1. TERMINATIONS SHALL BE MADE SUCH THAT CONNECTOR LOSS PER MATED PAIR DOES NOT EXCEED 0.5 DB. TERMINATIONS THAT EXCEED 0.5 DB SHALL BE REMADE.
2. ALL FIBER CONNECTIONS SHALL BE SC.
3. PATCH CABLES SHALL BE SINGLE SC TYPE, LENGTH AS REQUIRED.
4. FIBER DESIGNATIONS WILL BE CONFIRMED IN FUTURE SUBMISSIONS.

80% SUBMISSION
JANUARY 18, 2012

ARCHER WESTERN CONTRACTORS

HNTB Corporation
The HNTB Companies
Engineers Architects Planners

STATE OF NEW HAMPSHIRE
DEPARTMENT OF TRANSPORTATION * BUREAU OF BRIDGE DESIGN

TOWN PORTSMOUTH, NH - KITTERY, ME | BRIDGE NO. 247/084 | STATE PROJECT 13678

LOCATION US ROUTE 1 OVER THE PISCATAQUA RIVER

FIBER OPTIC INFRASTRUCTURE BLOCK DIAGRAM

BRIDGE SHEET: E10 OF E67

FILE NUMBER: XXX-X-X

REVISIONS AFTER PROPOSAL		BY	DATE		BY	DATE
	DESIGNED	MCG	1/12	CHECKED	GP	1/12
	DRAWN	GS	1/12	CHECKED	DR	1/12
	QUANTITIES	XXX	XX/XX	CHECKED	XXX	XX/XX
	ISSUE DATE					
	REV. DATE					

FEDERAL PROJECT NO.: BHF-T-0101(015) | SHEET NO.: XXX | TOTAL SHEETS: XXX

SUBDIRECTORY	.DGN LOCATOR	SHEET SCALE
Plans	13678F-E10_Fiber	NONE

DATE/TIME: 1/18/2012 5:32:12 PM USER: gstephenson
FILE NAME: U:\55519_Portsmouth_R11_Memorial_Bridge\E1\Plans\13678F-E10_Fiber.dgn
MODEL NAME: FIBER_LAYOUT
LAST SAVE: 1/18/2012 5:31:58 PM

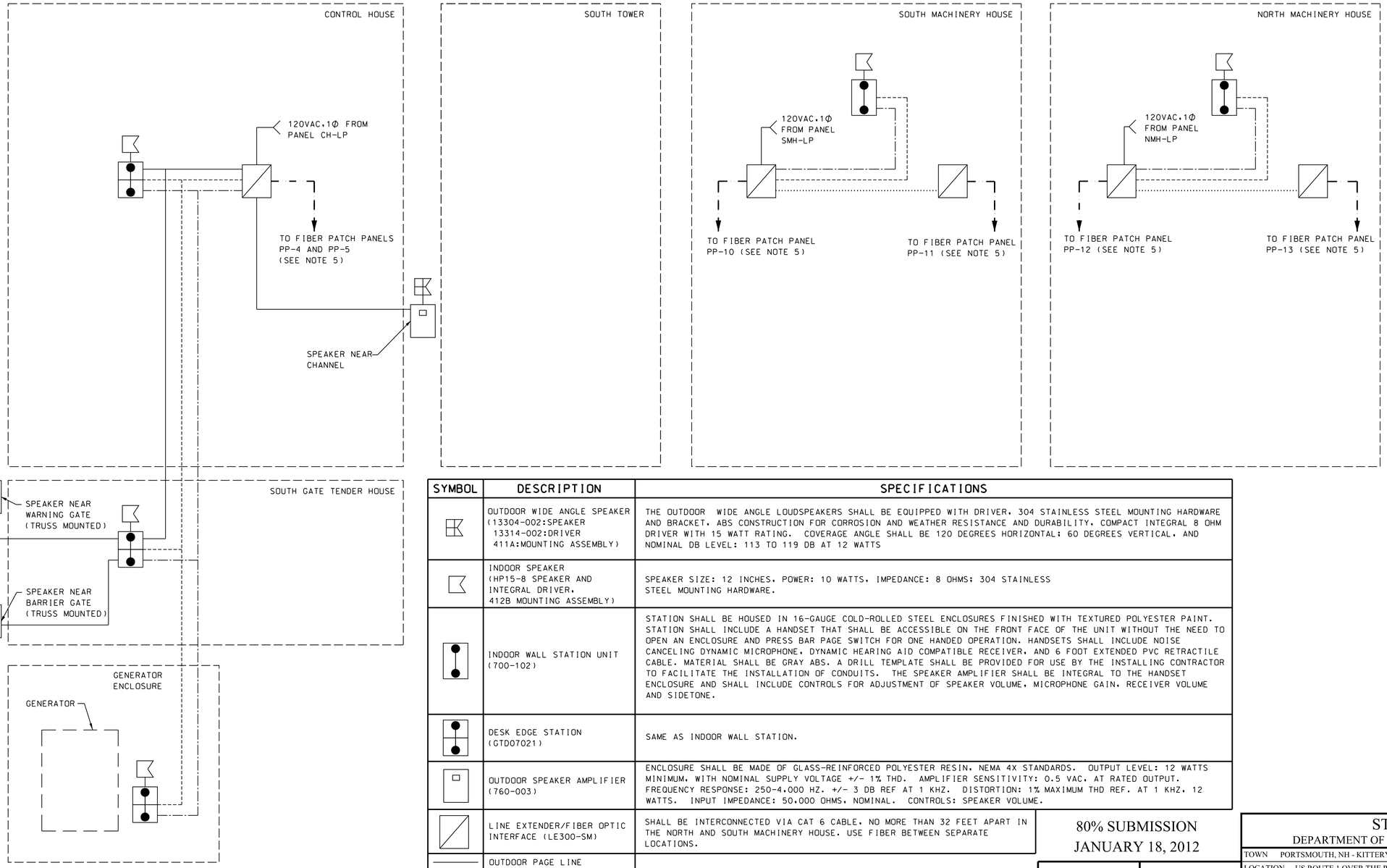

SYMBOL	DESCRIPTION	SPECIFICATIONS
	OUTDOOR WIDE ANGLE SPEAKER (13304-002:SPEAKER 13314-002:DRIVER 411A:MOUNTING ASSEMBLY)	THE OUTDOOR WIDE ANGLE LOUDSPEAKERS SHALL BE EQUIPPED WITH DRIVER, 304 STAINLESS STEEL MOUNTING HARDWARE AND BRACKET. ABS CONSTRUCTION FOR CORROSION AND WEATHER RESISTANCE AND DURABILITY. COMPACT INTEGRAL 8 OHM DRIVER WITH 15 WATT RATING. COVERAGE ANGLE SHALL BE 120 DEGREES HORIZONTAL: 60 DEGREES VERTICAL, AND NOMINAL DB LEVEL: 113 TO 119 DB AT 12 WATTS
	INDOOR SPEAKER (HP15-8 SPEAKER AND INTEGRAL DRIVER, 412B MOUNTING ASSEMBLY)	SPEAKER SIZE: 12 INCHES, POWER: 10 WATTS, IMPEDANCE: 8 OHMS: 304 STAINLESS STEEL MOUNTING HARDWARE.
	INDOOR WALL STATION UNIT (700-102)	STATION SHALL BE HOUSED IN 16-GAUGE COLD-ROLLED STEEL ENCLOSURES FINISHED WITH TEXTURED POLYESTER PAINT. STATION SHALL INCLUDE A HANDSET THAT SHALL BE ACCESSIBLE ON THE FRONT FACE OF THE UNIT WITHOUT THE NEED TO OPEN AN ENCLOSURE AND PRESS BAR PAGE SWITCH FOR ONE HANDED OPERATION. HANDSETS SHALL INCLUDE NOISE CANCELING DYNAMIC MICROPHONE, DYNAMIC HEARING AID COMPATIBLE RECEIVER, AND 6 FOOT EXTENDED PVC RETRACTILE CABLE. MATERIAL SHALL BE GRAY ABS. A DRILL TEMPLATE SHALL BE PROVIDED FOR USE BY THE INSTALLING CONTRACTOR TO FACILITATE THE INSTALLATION OF CONDUITS. THE SPEAKER AMPLIFIER SHALL BE INTEGRAL TO THE HANDSET ENCLOSURE AND SHALL INCLUDE CONTROLS FOR ADJUSTMENT OF SPEAKER VOLUME, MICROPHONE GAIN, RECEIVER VOLUME AND SIDETONE.
	DESK EDGE STATION (GTD07021)	SAME AS INDOOR WALL STATION.
	OUTDOOR SPEAKER AMPLIFIER (760-003)	ENCLOSURE SHALL BE MADE OF GLASS-REINFORCED POLYESTER RESIN, NEMA 4X STANDARDS. OUTPUT LEVEL: 12 WATTS MINIMUM, WITH NOMINAL SUPPLY VOLTAGE +/- 1% THD. AMPLIFIER SENSITIVITY: 0.5 VAC, AT RATED OUTPUT. FREQUENCY RESPONSE: 250-4,000 HZ. +/- 3 DB REF AT 1 KHZ. DISTORTION: 1% MAXIMUM THD REF. AT 1 KHZ, 12 WATTS. INPUT IMPEDANCE: 50,000 OHMS, NOMINAL. CONTROLS: SPEAKER VOLUME.
	LINE EXTENDER/FIBER OPTIC INTERFACE (LE300-SM)	SHALL BE INTERCONNECTED VIA CAT 6 CABLE, NO MORE THAN 32 FEET APART IN THE NORTH AND SOUTH MACHINERY HOUSE. USE FIBER BETWEEN SEPARATE LOCATIONS.
	OUTDOOR PAGE LINE	
	INDOOR PAGE LINE	
	PARTY LINE	
	FIBER OPTIC CABLE	
	CAT 5 CABLE	

INTERCOM SYSTEM NOTES:

1. INTERCOM EQUIPMENT NUMBERS PROVIDED ARE BY GAITRONICS. AN ALTERNATE EQUAL SYSTEM MAY BE SUBMITTED FOR APPROVAL.
2. INSTALL NEW 3/4" FRE AND RGS CONDUIT.
3. WIRE ALL SYSTEM COMPONENTS USING MANUFACTURER RECOMMENDED CABLING.
4. WIRE POWER TO SYSTEM FROM PANELBOARDS IN THE CONTROL HOUSE, THE MACHINERY HOUSE AND THE NORTH GATE TENDER HOUSE.
5. CONNECTION TO THE FIBER PATCH PANEL IN COMMUNICATION CABINET. SEE THE FIBER OPTIC INFRASTRUCTURE DRAWING FOR FURTHER DETAILS AND FIBER ASSIGNMENTS.
6. TWO PAGE CHANNELS AND ONE PARTY LINE SHALL BE PROVIDED. THE INDOOR PAGE CHANNEL SHALL BE FOR OPERATIONS AND MAINTENANCE PERSONNEL WHILE THE OUTDOOR PAGE CHANNEL SHALL BE FOR ANNOUNCEMENTS TO PEDESTRIANS AND MOTORISTS.
7. OUTDOOR LOUD SPEAKERS AT THE GATES SHALL BE MOUNTED APPROXIMATELY 12' ABOVE SIDEWALK LEVEL. THESE SPEAKERS SHALL BE ASSIGNED THE OUTDOOR PAGE CHANNEL BY THE INTEGRATOR. VOLUME SHALL BE ADJUSTED SO THAT MESSAGE CAN BE HEARD BY PEDESTRIANS ON OPPOSITE SIDE OF STREET.
8. INTERCOM EQUIPMENT TO BE FURNISHED SHALL INCLUDE ALL NECESSARY HANDSETS, HEADSETS, AMPLIFIERS, CABLE, AND ANY OTHER EQUIPMENT REQUIRED FOR A COMPLETE, OPERATIONAL SYSTEM FREE FROM INDUCED HUM OR NOISE SIGNALS.
9. THE SYSTEM SHALL UTILIZE A DISTRIBUTED AMPLIFIER ARRANGEMENT. WHEN AN AMPLIFIER FAILS OR IS REMOVED, ONLY THE ASSOCIATED SPEAKER SHALL BE RENDERED INOPERABLE. ALL STATION AMPLIFIERS SHALL BE ELECTRONICALLY PARALLELED ALLOWING FUTURE EXTENSION OF CABLING FOR THE ADDITION OF AMPLIFIER STATIONS.
10. ALL SPEAKERS AND ACCESSORY ITEMS INSTALLED IN THE SYSTEM SHALL BE RATED FOR OUTDOOR USE.
11. ONLY HEAVY-DUTY INDUSTRIAL COMPONENTS RATED TO OPERATE WITHIN THE FOLLOWING ENVIRONMENTAL CONDITIONS SHALL BE USED:

    HIGH NOISE AREAS, UP TO 115 DB SOUND PRESSURE LEVEL.
    AMBIENT TEMPERATURE RANGE OF 158F (70C), MAXIMUM TO -22F (-30C), MINIMUM.
    HIGH HUMIDITY, OILY, DIRTY, DUSTY AND SMOKY LOCATIONS,
    HAZARDOUS AREAS (DIVISION 1 AND 2, CLASS I, II, AND III).
    OUTDOOR LOCATIONS, LOCATIONS SUBJECT TO CONSTANT VIBRATIONS.

80% SUBMISSION
JANUARY 18, 2012

ARCHER WESTERN CONTRACTORS

HNTB
HNTB Corporation
The HNTB Companies
Engineers Architects Planners

SUBDIRECTORY	.DGN LOCATOR	SHEET SCALE
Plans	13678F-E11_Intcom	NONE

STATE OF NEW HAMPSHIRE
DEPARTMENT OF TRANSPORTATION * BUREAU OF BRIDGE DESIGN

TOWN PORTSMOUTH, NH - KITTERY, ME BRIDGE NO. 247/084 STATE PROJECT 13678

LOCATION US ROUTE 1 OVER THE PISCATAQUA RIVER

INTERCOM SYSTEM BLOCK DIAGRAM

REVISIONS AFTER PROPOSAL			BY	DATE		BY	DATE
		DESIGNED	MCG	01/12	CHECKED	GP	01/12
		DRAWN	SMP	01/12	CHECKED	DR	01/12
		QUANTITIES	XXX	XX/XX	CHECKED	XXX	XX/XX
		ISSUE DATE		FEDERAL PROJECT NO.		SHEET NO.	
		REV. DATE		BHF-T-0101(015)		XXX	

BRIDGE SHEET E11 OF E67
FILE NUMBER XXX-X-X
TOTAL SHEETS XXX

DATE/TIME: 1/18/2012 3:32:50 PM USER: gstephenson
FILE NAME: s:\FFL\WOXCADD\55519_Portsmouth_R11_Memorial_Bridge\Plans\13678F-E11_Intcom.dgn
MODEL NAME: Plan 1
LAST SAVE: 1/18/2012 8:50:03 AM

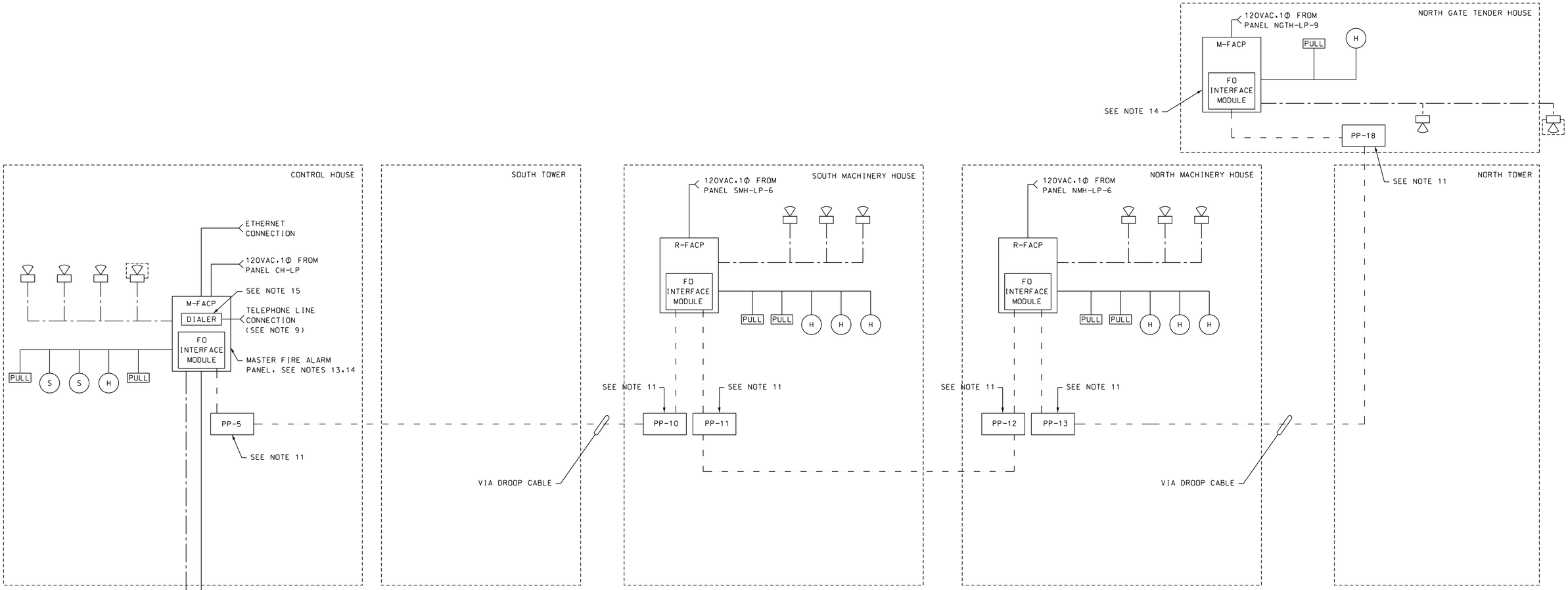

FIRE ALARM NOTES:

1. FIRE ALARM EQUIPMENT NUMBERS SHOWN ARE BY SIMPLEX. AN ALTERNATE EQUAL SYSTEM MAY BE SUBMITTED FOR APPROVAL.
2. WIRING FOR FIRE ALARM SYSTEM SHALL BE ENCLOSED IN RACEWAY DEDICATED SOLELY FOR FIRE ALARM SYSTEM AND SHALL BE ENCLOSED AS PER MANUFACTURER'S DIRECTIONS. MINIMUM CONDUIT SIZE SHALL BE ¾".
3. A REPRESENTATIVE OF THE ALARM SYSTEM MANUFACTURER SHALL BE ON SITE DURING INSTALLATION OF FIRE DETECTION SYSTEM.
4. ALL PULL STATIONS SHALL BE DOUBLE ACTION.
5. POWER FROM LIGHTING PANELS SHALL BE PROVIDED THROUGH #12 AWG SIZE CONDUCTORS IN ¾" CONDUIT.
6. IN AREAS THAT MAY BE DUSTY, HEAT SENSOR UNITS MAY BE INSTALLED IN LIEU OF SMOKE DETECTOR UNITS WITHOUT REPROGRAMMING OF THE CONTROL PANEL. SMOKE DETECTOR UNITS SHALL NOT BE COVERED BY ANY MEANS TO AVOID EXPOSURE TO DUST AND DIRT. HEAT DETECTOR IN GENERATOR ENCLOSURE SHALL BE APPROPRIATE FOR GENERATOR ENCLOSURE CONDITIONS.
7. EACH SMOKE DETECTOR, HEAT DETECTOR OR PULL STATION SHALL HAVE ITS OWN ADDRESSABLE MONITOR AND CONTROL POINT. THEY SHALL BE CONNECTED TO THE MASTER PANEL TO SOUND AND ACTIVATE HORNS AND STROBES AS SHOWN.
8. IT SHALL BE THE RESPONSIBILITY OF THE CONTRACTOR TO RESOLVE SYSTEM PROGRAMMING ISSUES WITH THE SYSTEM VENDOR.
9. FURNISH, INSTALL AND INTERCONNECT TELEPHONE LINES TO THE FIRE ALARM CONTROL PANEL. TWO LINES SHALL BE PROVIDED.
10. SEE LIGHTING PLANS FOR DEVICE LOCATIONS.
11. FIBER PATCH PANEL INSIDE COMMUNICATIONS CABINET. NOT ALL PATCH PANELS ARE SHOWN, SEE FIBER OPTIC INFRASTRUCTURE DRAWING FOR FURTHER DETAILS AND CONNECTIONS.
12. ALL EQUIPMENT SHALL BE FURNISHED AND INSTALLED PER NFPA 72 AND LOCAL CODES. ALL EQUIPMENT SHALL BE PROVIDED AS SHOWN ON THE PLANS OR AS NEEDED TO MAKE A FULLY FUNCTIONAL SYSTEM.
13. 4010ES FIRE ALARM CONTROL PANEL SHALL BE EQUIPPED WITH FIBER OPTIC INTERFACE MODULE, PHONE DIALER AND TABULAR ANNUNCIATOR DISPLAY, AND ALARM SILENCE AND SYSTEM RESET KEYSWITCHES.
14. THE MASTER FIRE ALARM PANEL SHALL BE FURNISHED AND INSTALLED WITH A SERIAL TELEPHONE DIALER AND SHALL BE LOCATED ON THE UPPER LEVEL OF THE CONTROL HOUSE.
15. THE SERIAL PHONE DIALER SHALL PROVIDE PER POINT ALARM INFORMATION SUCH THAT THE GOVERNING FIRE DEPARTMENT SHALL BE AWARE OF LOCATION OF ALARM ON NOTIFICATION.
16. LIGHTNING PROTECTION SHALL BE PROVIDED FOR FIRE ALARM CONNECTIONS BETWEEN CONTROL HOUSE, SOUTH GATE TENDER HOUSE AND GENERATOR ENCLOSURE.
17. IT IS ASSUMED THAT THE PORTSMOUTH FIRE DEPARTMENT SHALL BE THE GOVERNING FIRE DEPARTMENT FOR THE BRIDGE.

LEGEND:

H	HEAT DETECTOR
S	4098-9714 TRUE ALARM PHOTOELECTRIC SMOKE DETECTOR
PULL	4099-9003 IDNET ADDRESSABLE MANUAL PULL STATION
	4903-9453 TRUE ALERT HORN/STROBE w/ 15cd
	WHEELOCK ASWP w/ WPBB-R WEATHERPROOF AUDIBLE STROBE
———	#18 AWG TWISTED SHIELDED PAIR
DIALER	PHONE DIALER
—— - ——	(2) #14 AWG (POWER)
— — —	FIBER OPTIC CABLE
M-FACP / FO INTERFACE MODULE	4010ES FIRE ALARM CONTROL PANEL WITH ANNUNCIATOR LED DISPLAY AND FIBER OPTIC INTERFACE MODULE INSIDE FIRE ALARM PANEL
R-FACP / FO INTERFACE MODULE	4009 IDNET REMOTE FIRE ALARM CONTROL PANEL AND FIBER OPTIC INTERFACE MODULE INSIDE FIRE ALARM PANEL
PP-XX	PATCH PANEL XX-PATCH NUMBER

80% SUBMISSION
JANUARY 18, 2012

ARCHER WESTERN CONTRACTORS

HNTB
HNTB Corporation
The HNTB Companies
Engineers Architects Planners

SUBDIRECTORY	.DGN LOCATOR	SHEET SCALE
Plans	13678F-E12_FAlarm	NONE

STATE OF NEW HAMPSHIRE
DEPARTMENT OF TRANSPORTATION * BUREAU OF BRIDGE DESIGN

TOWN PORTSMOUTH, NH - KITTERY, ME BRIDGE NO. 247/084 STATE PROJECT 13678

LOCATION US ROUTE 1 OVER THE PISCATAQUA RIVER

FIRE ALARM SYSTEM BLOCK DIAGRAM

REVISIONS AFTER PROPOSAL		BY	DATE		BY	DATE
	DESIGNED	MCG	01/12	CHECKED	GP	01/12
	DRAWN	SMP	01/12	CHECKED	DR	01/12
	QUANTITIES	XXX	XX/XX	CHECKED	XXX	XX/XX

ISSUE DATE	FEDERAL PROJECT NO.	SHEET NO.	TOTAL SHEETS
REV. DATE	BHF-T-0101(015)	XXX	XXX

BRIDGE SHEET E12 OF E67

FILE NUMBER XXX-X-X

DATE/TIME: 1/18/2012 5:33:37 PM USER: gstephenson
FILE NAME: s:\FFLw00\CADD\55519_Portsmouth_Rt1_Memorial_Bridge\Plans\13678F-E12_FAlarm.dgn
MODEL NAME: Plan 1
LAST SAVE: 1/18/2012 12:06:47 PM

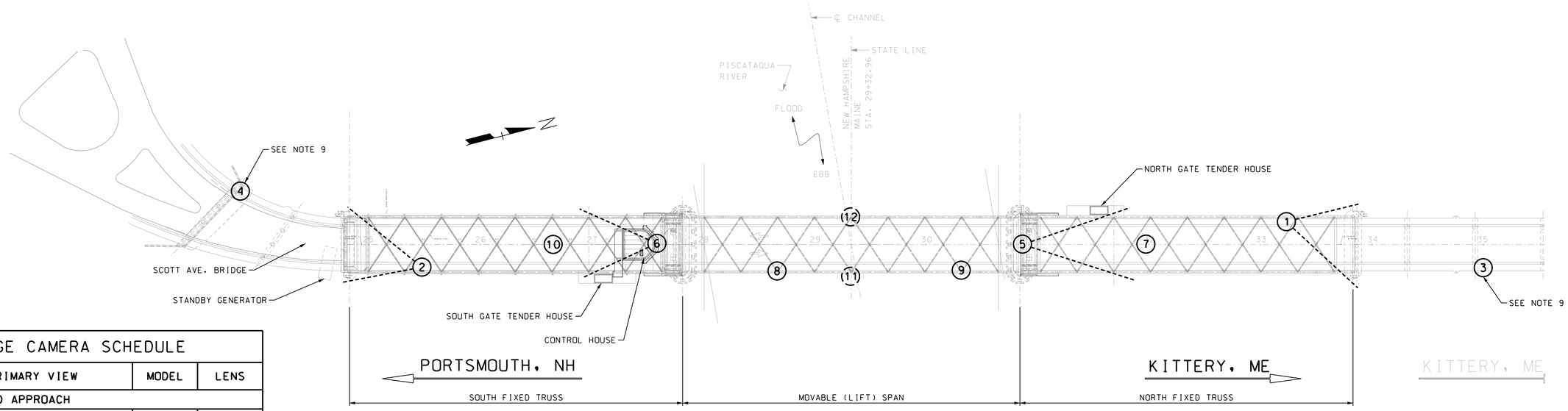

PLAN

1" = 50'-0"

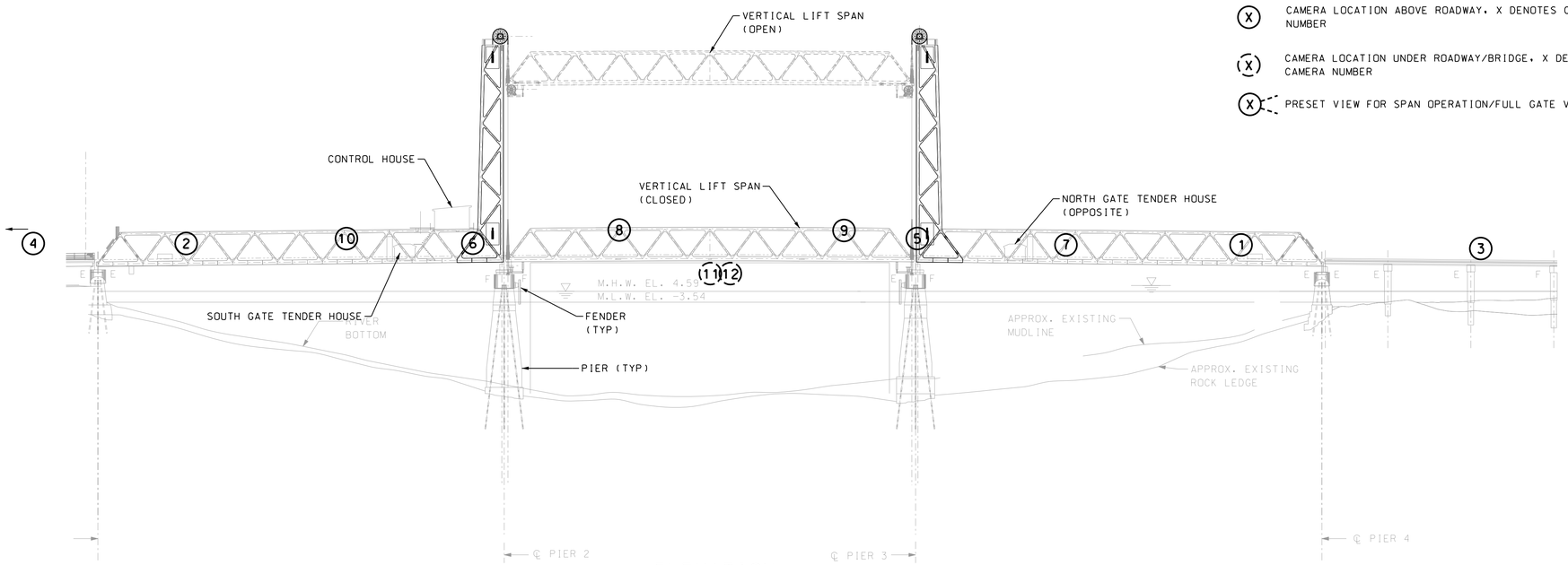

ELEVATION

1" = 50'-0"

BRIDGE CAMERA SCHEDULE

CAM #	PRIMARY VIEW	MODEL	LENS
WARNING GATES AND APPROACH			
1	NORTH WARNING GATES	PELCO SPECTRA IV	35x ZOOM
2	SOUTH WARNING GATES	PELCO SPECTRA IV	35x ZOOM
3	NORTH WARNING GATES AND NORTH APPROACH	PELCO SPECTRA IV	35x ZOOM
4	SOUTH WARNING GATES AND SOUTH APPROACH	PELCO SPECTRA IV	35x ZOOM
BARRIER GATES			
5	NORTH BARRIER GATES AND NORTH APPROACH SPAN	PELCO SPECTRA IV	35x ZOOM
6	SOUTH BARRIER GATES AND SOUTH APPROACH SPAN	PELCO SPECTRA IV	35x ZOOM
ROADWAY BETWEEN BARRIER GATES			
7	NORTH APPROACH SPAN (BARRIER GATES TO MOVABLE SPAN)	PELCO SPECTRA IV	35x ZOOM
8	CENTER SPAN (ROADWAY)	PELCO SPECTRA IV	35x ZOOM
9	CENTER SPAN (ROADWAY)	PELCO SPECTRA IV	35x ZOOM
10	SOUTH APPROACH SPAN (BARRIER GATES TO MOVABLE SPAN)	PELCO SPECTRA IV	35x ZOOM
WATERWAY			
11	UP RIVER WATERWAY	PELCO SPECTRA IV	35x ZOOM
12	DOWN RIVER WATERWAY	PELCO SPECTRA IV	35x ZOOM

LEGEND:

- (X) CAMERA LOCATION ABOVE ROADWAY. X DENOTES CAMERA NUMBER
- (X) CAMERA LOCATION UNDER ROADWAY/BRIDGE. X DENOTES CAMERA NUMBER
- (X) PRESET VIEW FOR SPAN OPERATION/FULL GATE VISIBILITY

NOTES:

1. CAMERAS ARE INTENDED TO SUPPLEMENT THE VIEWS FROM THE OPERATOR DESK. SUCH THAT ALL ROADWAY. BICYCLE. PEDESTRIAN. AND NAVIGATION TRAFFIC IS VISIBLE TO OPERATOR.
2. ALL CAMERAS SHALL BE HARD WIRED. A WIRELESS COMMUNICATIONS INFRASTRUCTURE IS NOT ACCEPTABLE.
3. ALL CAMERAS SHALL BE PTZ (PAN. TILT. ZOOM) TYPE. (CAMERA SHALL BE PELCO SPECTRA IV SP435-PRMEO OR APPROVED EQUAL).
4. THE CONTROLLER SHALL HAVE ROOM FOR EXPANSION OF ADDITIONAL CAMERAS.
5. EXACT CAMERA LOCATIONS SHALL BE VERIFIED IN THE FIELD PRIOR TO INSTALLATION.
6. PROVIDE 20" LCD MONITORS. THE MONITORS SHALL BE CAPABLE OF SWITCHING FROM ONE SCREEN TO ANOTHER.
7. THE MONITORS SHALL BE LOCATED CONVENIENTLY IN FRONT OF THE OPERATOR. THEY SHALL BE MOUNTED AT A HEIGHT THAT WILL NOT OBSTRUCT VIEW OF THE SPAN OR CHANNELS. SEE CONTROL HOUSE EQUIPMENT LAYOUT DRAWING. ◯ ◯
8. APPROPRIATE CAMERA MOUNTS. BRACKETS AND HARDWARE SHALL BE PROVIDED FOR ALL CAMERAS.
9. CAMERAS 3 AND 4 SHALL BE MOUNTED TO LIGHTING POLES. APPROPRIATE MOUNTS SHALL BE USED. SEE LIGHTING PLANS FOR DETAILS.

80% SUBMISSION
JANUARY 18, 2012

ARCHER WESTERN CONTRACTORS

HNTB
HNTB Corporation
The HNTB Companies
Engineers Architects Planners

SUBDIRECTORY	.DGN LOCATOR	SHEET SCALE
Plans	13678F-E13_CCTV	1" = 50'-0"

STATE OF NEW HAMPSHIRE
DEPARTMENT OF TRANSPORTATION * BUREAU OF BRIDGE DESIGN

TOWN PORTSMOUTH, NH - KITTERY, ME BRIDGE NO. 247/084 STATE PROJECT 13678

LOCATION US ROUTE 1 OVER THE PISCATAQUA RIVER

CCTV CAMERA LOCATIONS

REVISIONS AFTER PROPOSAL		BY	DATE		BY	DATE
	DESIGNED	MCG	12/11	CHECKED	GP	12/11
	DRAWN	MDC	12/11	CHECKED	DR	12/11
	QUANTITIES	XXX	XX/XX	CHECKED	XXX	XX/XX
	ISSUE DATE					
	REV. DATE					

FEDERAL PROJECT NO. BHF-T-0101(015)

SHEET NO. XXX

BRIDGE SHEET E13 OF E67

FILE NUMBER XXX-X-X

TOTAL SHEETS XXX

DATE/TIME: 1/18/2012 3:32:52 PM USER: gstephenson
FILE NAME: s:\FFLW00\CADD\55519_Portsmouth_R11_Memorial_Bridge\E1\Plans\13678F-E13_CCTV.dgn
MODEL NAME: Plan - Elevation
LAST SAVE: 1/18/2012 8:20:58 AM

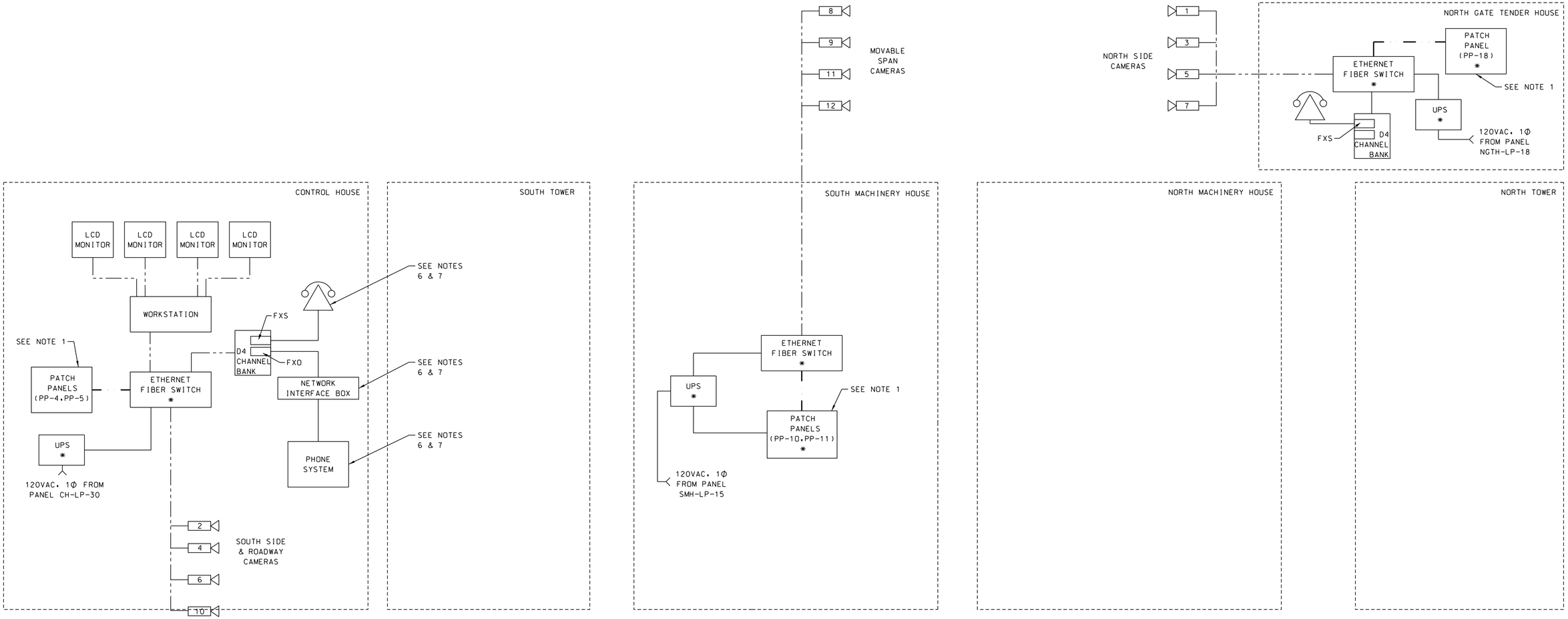

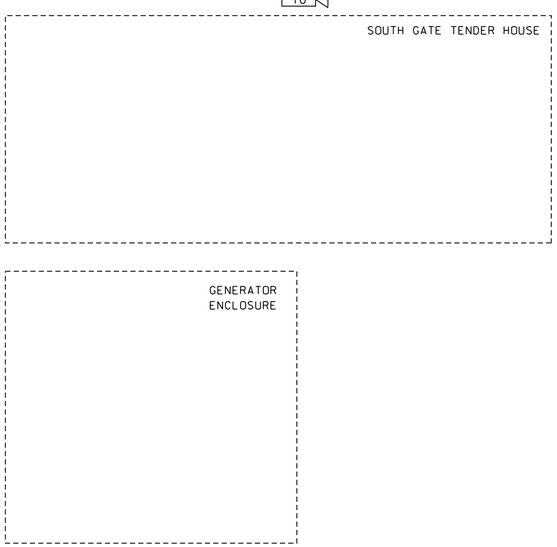

CCTV AND TELEPHONE EQUIPMENT CONNECTION BLOCK DIAGRAM

NOT TO SCALE

NOTES:

1. FIBER OPTIC INFRASTRUCTURE DRAWING FOR PHYSICAL FIBER CONNECTION DETAILS BETWEEN PATCH PANELS.
2. CAMERA POWER CONNECTIONS NOT SHOWN.
3. FIBER OPTIC CABLES SHALL BE ROUTED THROUGH THE BRIDGE DROOP CABLE SYSTEM.
4. SEE EQUIPMENT AND LIGHTING PLANS FOR LOCATIONS OF ALL EQUIPMENT EXCEPT CAMERAS. FOR CAMERA LOCATIONS, SEE BRIDGE SHEET E13, CCTV CAMERA LOCATIONS.
5. CAMERA SPECIFICATIONS TO BE DEVELOPED.
6. FIVE TELEPHONE LINES SHALL BE FURNISHED AND INSTALLED FROM THE TELEPHONE NETWORK INTERFACE BOX(ES), IN THE CONTROL ROOM. ALL NEW TELEPHONE LINES SHALL BE TERMINATED AT SEPARATE RJ11 TYPE WALL JACKS IN THE LOCATIONS SHOWN ON THE PLANS OR AS DIRECTED BY THE ENGINEER. ONE TELEPHONE LINE WILL BE FOR VOICE COMMUNICATION, ONE FOR A DEDICATED FOR A FAX MACHINE, TWO LINES SHALL BE DEDICATED FOR THE FIRE ALARM DIALER AND ONE SHALL BE DEDICATED TO THE PLC MODEM.
7. THE CONTRACTOR SHALL COORDINATE WITH THE LOCAL TELEPHONE UTILITY TO ARRANGE FOR THE NECESSARY TELEPHONE SERVICE AND INSTALLATION OF THE NETWORK INTERFACE BOXES AS REQUIRED.
8. A DESK TYPE TELEPHONE SHALL BE PROVIDED FOR THE CONTROL ROOM LEVEL OF THE CONTROL HOUSE. PHONE HOUSING SHALL BE CONSTRUCTED OF HIGH-IMPACT, ANTI-CORROSIVE POLYESTER RESISTANT TO THERMAL DEGRADATION AND IMMUNE TO CHEMICALS, SOLVENTS AND SALTS AND RATED NEMA 3. TELEPHONE SHALL OPERATE ON A STANDARD ANALOG PHONE LINE, USE TONE DIALING, BE SOLELY POWERED FROM THE PHONE LINE AND NOT REQUIRE A BATTERY OR EXTERNAL POWER SOURCE.
9. A FAX MACHINE AND SUPPORTING WIRING SHALL BE FURNISHED AND INSTALLED IN THE CONTROL ROOM. THE FAX MACHINE SHALL INCLUDE AN 18 SHEET AUTOMATIC DOCUMENT FEEDER, 16 LEVEL HALFTONE CONTROL, 15 SECOND TRANSMISSION SPEED, AUTOMATIC FAX/PHONE CHANGEOVER WITH ANSWERING MACHINE CONNECTABILITY AND A 50 NUMBER AUTODIALER FOR PHONE AND FAX CALLS.
10. CABLE TELEVISION SERVICE SHALL BE FURNISHED AND INSTALLED FROM THE SYSTEM INTERFACE BOXES, IN THE CONTROL HOUSE TO THE CONTROL ROOM LEVEL. THE CABLE TELEVISION LINE SHALL BE TERMINATED AT A WALL JACK IN THE CONTROL ROOM.
11. THE CONTRACTOR SHALL COORDINATE WITH THE LOCAL CABLE TELEVISION UTILITY TO ARRANGE FOR THE NECESSARY SERVICE AND INSTALLATION OF THE SYSTEM INTERFACE BOXES AS REQUIRED.
12. BROADBAND INTERNET SERVICE SHALL BE FURNISHED AND INSTALLED FROM THE SYSTEM INTERFACE BOXES, IN THE CONTROL HOUSE TO THE CONTROL ROOM LEVEL. THE NEW INTERNET SERVICE LINE SHALL BE TERMINATED AT A WALL JACKS IN THE CONTROL ROOM.
13. THE CONTRACTOR SHALL COORDINATE WITH THE LOCAL BROADBAND INTERNET PROVIDER TO ARRANGE FOR THE NECESSARY INTERNET SERVICE AND INSTALLATION OF THE NETWORK INTERFACE BOXES AND ROUTER AS REQUIRED.
14. LIGHTNING/SURGE PROTECTION SHALL BE PROVIDED FOR TELEPHONE AND COMMUNICATION EQUIPMENT.

LEGEND:

—— · ——	FIBER-OPTIC CABLE
—— - - ——	CAT6 10/100 BASE T CABLE IN 3/4" CONDUIT MIN.
————	120V SINGLE PHASE AC POWER
▷ #	CCTV CAMERA #
△	2-WIRE TELEPHONE
FXO	FOREIGN EXCHANGE OFFICE CARD
FXS	FOREIGN EXCHANGE SUBSCRIBER CARD
PP-XX	XX DENOTES PATCH PANEL NUMBER
UPS	UNINTERUPTABLE POWER SUPPLY
*	DENOTES EQUIPMENT MOUNTED IN COMMUNICATIONS CABINET

80% SUBMISSION
JANUARY 18, 2012

ARCHER WESTERN CONTRACTORS

HNTB
HNTB Corporation
The HNTB Companies
Engineers Architects Planners

SUBDIRECTORY	.DGN LOCATOR	SHEET SCALE
Plans	13678F-E14_Comm	NONE

STATE OF NEW HAMPSHIRE
DEPARTMENT OF TRANSPORTATION * BUREAU OF BRIDGE DESIGN

TOWN PORTSMOUTH, NH - KITTERY, ME BRIDGE NO. 247/084 STATE PROJECT 13678
LOCATION US ROUTE 1 OVER THE PISCATAQUA RIVER

COMMUNICATIONS EQUIPMENT BLOCK DIAGRAM

REVISIONS AFTER PROPOSAL	BY	DATE		BY	DATE
DESIGNED	MCG	01/12	CHECKED	GP	01/12
DRAWN	SMP	01/12	CHECKED	DR	01/12
QUANTITIES	XXX	XXX	CHECKED	XXX	XXX

ISSUE DATE	FEDERAL PROJECT NO.	SHEET NO.	TOTAL SHEETS
REV. DATE	BHF-T-0101(015)	XX/XX	XXX

BRIDGE SHEET E14 OF E67
FILE NUMBER XXX-X-X

DATE/TIME:1/18/2012 5:37:29 PM USER:gstephenson
FILE NAME:s:\FFL_WOG\CADD\55519_Portsmouth_Rt1_Memorial_Bridges\Plans\13678F-E14_Comm.dgn
MODEL NAME:Plan 1
LAST SAVE:1/18/2012 5:37:19 PM

NAVIGATION EQUIPMENT SCHEDULE

INFORMATION WILL BE PROVIDED BY 100% SUBMISSION

No.	DESCRIPTION	PART NUMBER	QUANTITY
1	CONTACTORS		
2	PHOTOCELL		

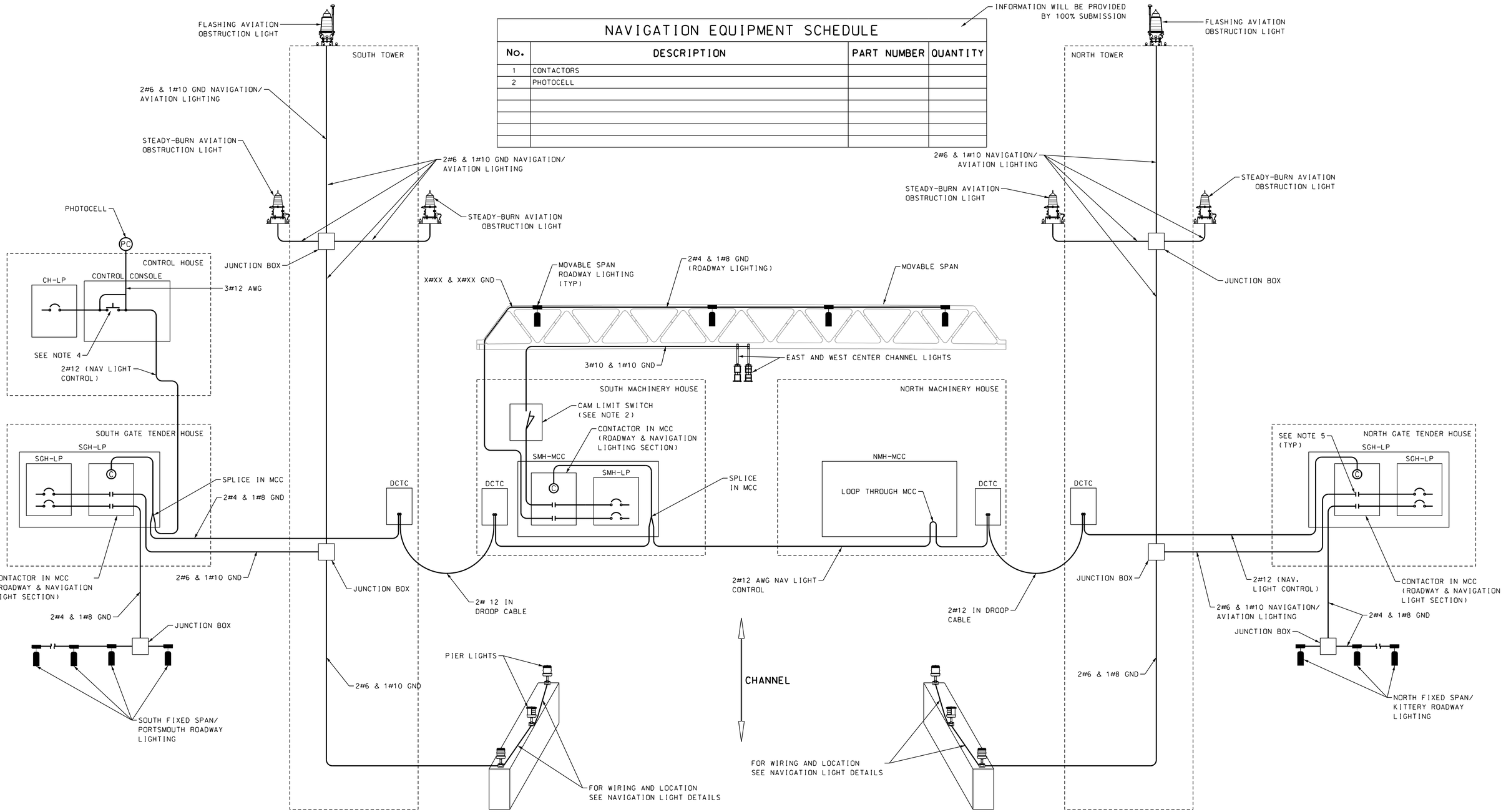

BLOCK DIAGRAM

NOT TO SCALE

NOTES:

1. POWER CABLES/CONDUITS BETWEEN MCCs NOT SHOWN FOR CLARITY. SEE ONE-LINE DIAGRAM.
2. CAM LIMIT SWITCH SHALL BE CONFIGURED SUCH THAT CENTER CHANNEL LIGHTS ARE RED WHEN BRIDGE IS NOT FULLY OPEN, AND GREEN ONLY WHEN SPAN IS FULLY OPEN.
3. WIRING, CONDUIT, JUNCTION BOXES, ENCLOSURES, AND CONNECTIONS SHOWN SCHEMATICALLY. PROVIDE SHOP DRAWING SHOWING ALL WIRE SIZES AND CONNECTIONS. SEE OTHER PLANS FOR ADDITIONAL CONDUIT/RACEWAY DETAILS.
4. CIRCUIT SHALL OPERATE SUCH THAT LIGHTS COME ON AUTOMATICALLY WHEN IT IS DARK. SWITCH ON CONTROL CONSOLE SHALL BE WIRED TO PROVIDE OVERRIDE FUNCTION TO TURN LIGHTS ON MANUALLY.
5. NEUTRAL WIRES SHALL BE CONTINUOUS, AND NOT SWITCHED WHERE THEY PASS THROUGH CONTACTORS OR SWITCHES.

80% SUBMISSION
JANUARY 18, 2012

ARCHER WESTERN CONTRACTORS

HNTB
HNTB Corporation
The HNTB Companies
Engineers Architects Planners

SUBDIRECTORY	.DGN LOCATOR	SHEET SCALE
Plans	13678F-E15_Ltg_BlkDia	NONE

STATE OF NEW HAMPSHIRE
DEPARTMENT OF TRANSPORTATION * BUREAU OF BRIDGE DESIGN

TOWN PORTSMOUTH, NH - KITTERY, ME BRIDGE NO. 247/084 STATE PROJECT 13678
LOCATION US ROUTE 1 OVER THE PISCATAQUA RIVER

LIGHTING BLOCK DIAGRAM

REVISIONS AFTER PROPOSAL	BY	DATE		BY	DATE
DESIGNED	MCG	01/12	CHECKED	GP	01/12
DRAWN	SMP	01/12	CHECKED	DR	01/12
QUANTITIES	XXX	XXX	CHECKED	XXX	XXX

ISSUE DATE	FEDERAL PROJECT NO.	SHEET NO.	TOTAL SHEETS
REV. DATE	BHF-T-0101(015)	XX/XX	XXX

BRIDGE SHEET E15 OF E67
FILE NUMBER XXX-X-X

DATE/TIME: 1/18/2012 3:32:55 PM USER: gstephenson
FILE NAME: s:\FFLW00\CADD\55519_Portsmouth_Rt1_Memorial_Bridge\E1\Plans\13678F-E15_Ltg_BlkDia.dgn
MODEL NAME: Plan 1
LAST SAVE: 1/18/2012 10:30:59 AM

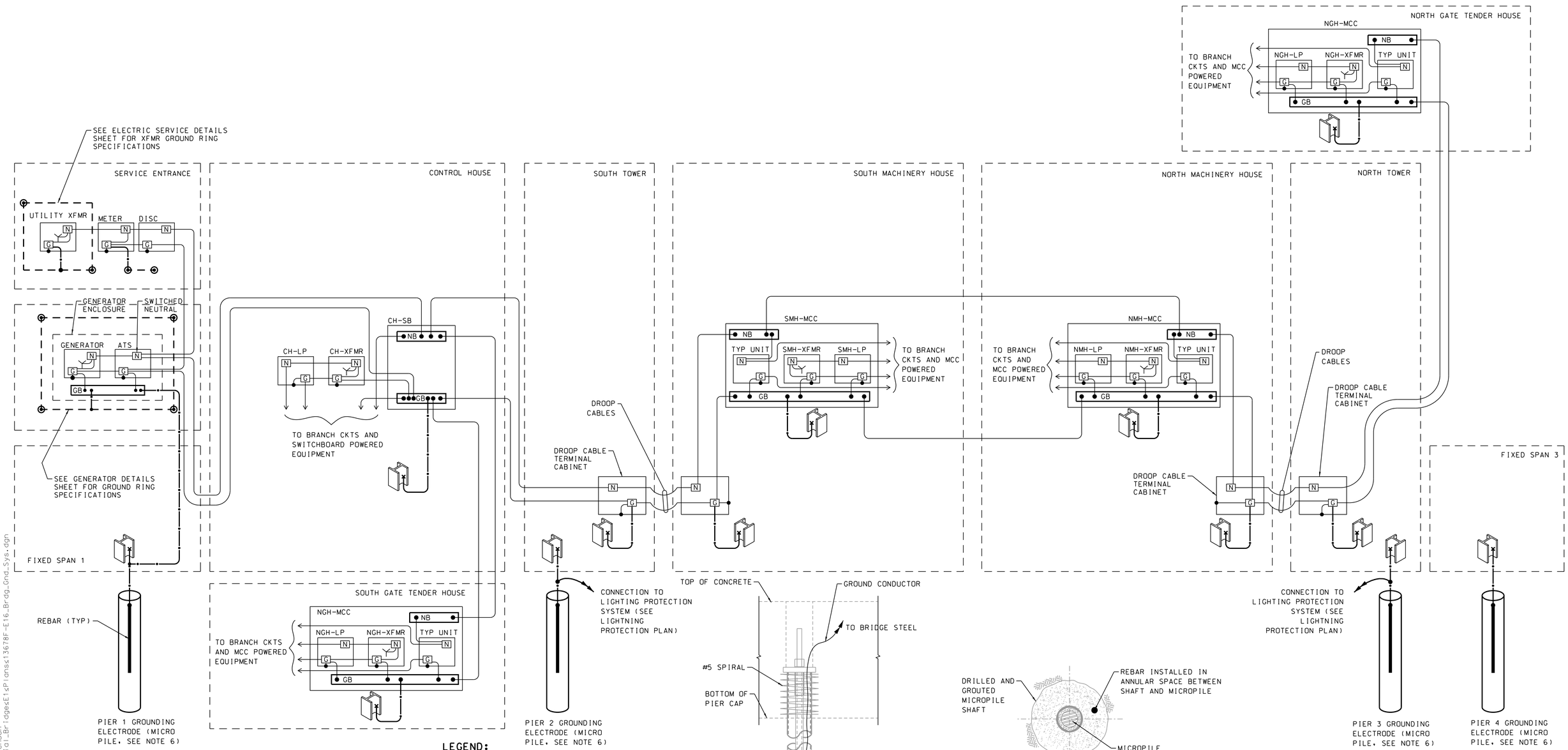

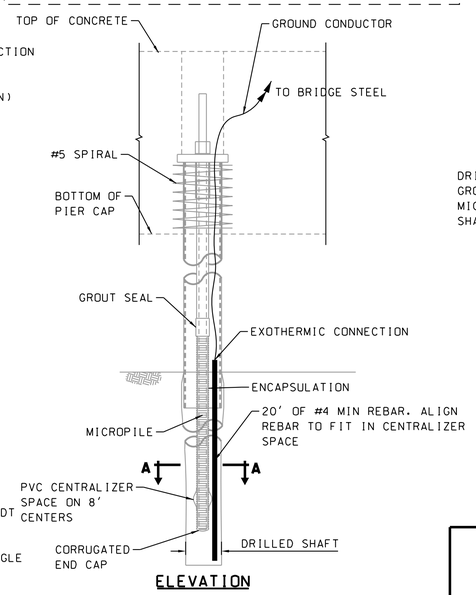

ELEVATION

GROUNDING ELECTRODE

NOT TO SCALE

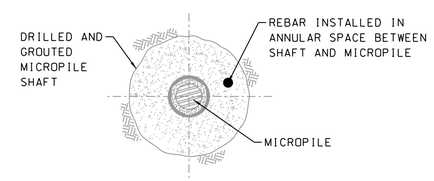

SECTION A-A

NOT TO SCALE

NOTES:

1. THE BRIDGE GROUNDING SYSTEM ON THIS DRAWING IS DIAGRAMMATIC AND ONLY DEPICTS THE MAJOR COMPONENTS OF THE BRIDGE GROUNDING AND ELECTRICAL SYSTEM. NOT ALL COMPONENTS ARE SHOWN ON THE DIAGRAM. COMPLETE ALL REQUIRED BONDING OR GROUNDING IN ACCORDANCE WITH THE NEC.
2. PROVIDE A #2AWG BARE COPPER STRANDED EXOTHERMICALLY CONNECTED BONDING JUMPER ACROSS ALL BOLTED OR NON-CONDUCTIVE STRUCTURAL CONNECTIONS ON THE BRIDGE.
3. CROSSING LINES ARE ELECTRICALLY CONNECTED ONLY IF A DOT ( ) IS SUPERIMPOSED OVER THE INTERSECTION OF THE LINES.
4. NO NEUTRALS ARE CONNECTED TO THE PRIMARY SIDE DELTA WINDING OF ANY TRANSFORMERS.
5. THE "Y" IN TRANSFORMER SYMBOLS REFERS TO THE "Y" SECONDARY WINDING.
6. FOR DETAILS OF CONCRETE ENCASED GROUNDING ELECTRODE INSTALLED IN MICROPILE, SEE DRAWING ON THIS SHEET.

LEGEND:

- N — NEUTRAL CONNECTION (GROUNDED CONDUCTOR)
- G — GROUNDING AND/OR BONDING CONNECTION
- 3/4" X 10' COPPER CLAD GROUND ROD
- GB — GROUND BUS } INTEGRAL TO PANEL/EQUIPMENT
- NB — NEUTRAL BUS } INTEGRAL TO PANEL/EQUIPMENT
- GROUND RING CONDUCTOR (#2AWG BARE STRANDED COPPER, 30 INCHES BELOW GRADE UON)
- GROUNDING ELECTRODE (#2/0AWG BARE STRANDED COPPER UON, INSTALL IN 1" SCHEDULE 80 PVC CDT WHERE EXPOSED)
- EQUIPMENT GROUNDING CONDUCTOR (SIZE PER SINGLE LINE DIAGRAM AND/OR NEC UON)
- EXOTHERMIC WELD TO LOWER TRUSS CHORD STRUCTURAL STEEL

80% SUBMISSION
JANUARY 18, 2012

ARCHER WESTERN CONTRACTORS

HNTB
HNTB Corporation
The HNTB Companies
Engineers Architects Planners

SUBDIRECTORY	.DGN LOCATOR	SHEET SCALE
Plans	13678F-E16_Brdg_Gnd_Sys	1" = 50'-0"

STATE OF NEW HAMPSHIRE
DEPARTMENT OF TRANSPORTATION * BUREAU OF BRIDGE DESIGN

TOWN PORTSMOUTH, NH - KITTERY, ME BRIDGE NO. 247/084 STATE PROJECT 13678
LOCATION US ROUTE 1 OVER THE PISCATAQUA RIVER

BRIDGE GROUNDING SYSTEM

REVISIONS AFTER PROPOSAL		BY	DATE		BY	DATE
	DESIGNED		11/11	CHECKED		11/11
	DRAWN	MDC	11/11	CHECKED	DR	11/11
	QUANTITIES	XXX	11/11	CHECKED	XXX	11/11

ISSUE DATE	FEDERAL PROJECT NO.	SHEET NO.	TOTAL SHEETS
REV. DATE	BHF-T-0101(015)	E67	XXX

BRIDGE SHEET E16 OF E67
FILE NUMBER XXX-X-X

DATE/TIME: 1/18/2012 3:32:56 PM USER: gstephenson
FILE NAME: s:\FLW00\CADD\55519_Portsmouth_Rt1_Memorial_Bridge\E1\Plans\13678F-E16_Brdg_Gnd_Sys.dgn
MODEL NAME: Bridge Grounding
LAST SAVE: 1/17/2012 4:23:42 PM

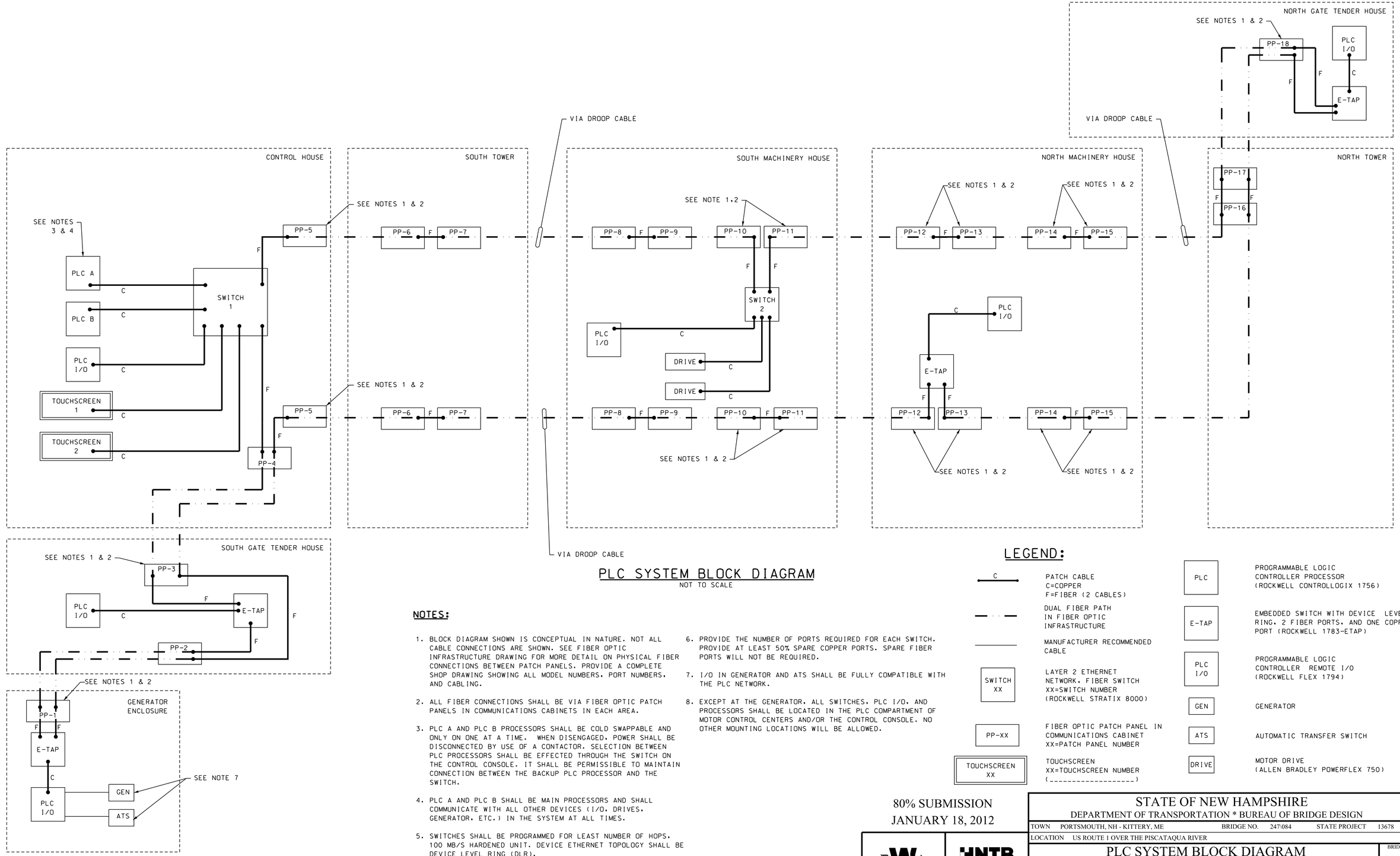

PLC SYSTEM BLOCK DIAGRAM

NOT TO SCALE

NOTES:

1. BLOCK DIAGRAM SHOWN IS CONCEPTUAL IN NATURE. NOT ALL CABLE CONNECTIONS ARE SHOWN. SEE FIBER OPTIC INFRASTRUCTURE DRAWING FOR MORE DETAIL ON PHYSICAL FIBER CONNECTIONS BETWEEN PATCH PANELS. PROVIDE A COMPLETE SHOP DRAWING SHOWING ALL MODEL NUMBERS, PORT NUMBERS, AND CABLING.
2. ALL FIBER CONNECTIONS SHALL BE VIA FIBER OPTIC PATCH PANELS IN COMMUNICATIONS CABINETS IN EACH AREA.
3. PLC A AND PLC B PROCESSORS SHALL BE COLD SWAPPABLE AND ONLY ON ONE AT A TIME. WHEN DISENGAGED, POWER SHALL BE DISCONNECTED BY USE OF A CONTACTOR. SELECTION BETWEEN PLC PROCESSORS SHALL BE EFFECTED THROUGH THE SWITCH ON THE CONTROL CONSOLE. IT SHALL BE PERMISSIBLE TO MAINTAIN CONNECTION BETWEEN THE BACKUP PLC PROCESSOR AND THE SWITCH.
4. PLC A AND PLC B SHALL BE MAIN PROCESSORS AND SHALL COMMUNICATE WITH ALL OTHER DEVICES (I/O, DRIVES, GENERATOR, ETC.) IN THE SYSTEM AT ALL TIMES.
5. SWITCHES SHALL BE PROGRAMMED FOR LEAST NUMBER OF HOPS, 100 MB/S HARDENED UNIT. DEVICE ETHERNET TOPOLOGY SHALL BE DEVICE LEVEL RING (DLR).
6. PROVIDE THE NUMBER OF PORTS REQUIRED FOR EACH SWITCH. PROVIDE AT LEAST 50% SPARE COPPER PORTS. SPARE FIBER PORTS WILL NOT BE REQUIRED.
7. I/O IN GENERATOR AND ATS SHALL BE FULLY COMPATIBLE WITH THE PLC NETWORK.
8. EXCEPT AT THE GENERATOR, ALL SWITCHES, PLC I/O, AND PROCESSORS SHALL BE LOCATED IN THE PLC COMPARTMENT OF MOTOR CONTROL CENTERS AND/OR THE CONTROL CONSOLE. NO OTHER MOUNTING LOCATIONS WILL BE ALLOWED.

LEGEND:

C	PATCH CABLE C=COPPER F=FIBER (2 CABLES)
	DUAL FIBER PATH IN FIBER OPTIC INFRASTRUCTURE
	MANUFACTURER RECOMMENDED CABLE
SWITCH XX	LAYER 2 ETHERNET NETWORK, FIBER SWITCH XX=SWITCH NUMBER (ROCKWELL STRATIX 8000)
PP-XX	FIBER OPTIC PATCH PANEL IN COMMUNICATIONS CABINET XX=PATCH PANEL NUMBER
TOUCHSCREEN XX	TOUCHSCREEN XX=TOUCHSCREEN NUMBER (_____)
PLC	PROGRAMMABLE LOGIC CONTROLLER PROCESSOR (ROCKWELL CONTROLLOGIX 1756)
E-TAP	EMBEDDED SWITCH WITH DEVICE LEVEL RING, 2 FIBER PORTS, AND ONE COPPER PORT (ROCKWELL 1783-ETAP)
PLC I/O	PROGRAMMABLE LOGIC CONTROLLER REMOTE I/O (ROCKWELL FLEX 1794)
GEN	GENERATOR
ATS	AUTOMATIC TRANSFER SWITCH
DRIVE	MOTOR DRIVE (ALLEN BRADLEY POWERFLEX 750)

80% SUBMISSION
JANUARY 18, 2012

ARCHER WESTERN CONTRACTORS

HNTB
HNTB Corporation
The HNTB Companies
Engineers Architects Planners

SUBDIRECTORY	.DGN LOCATOR	SHEET SCALE
Plans	13678F-E17_PLCBk	NONE

STATE OF NEW HAMPSHIRE
DEPARTMENT OF TRANSPORTATION * BUREAU OF BRIDGE DESIGN

TOWN PORTSMOUTH, NH - KITTERY, ME BRIDGE NO. 247\084 STATE PROJECT 13678

LOCATION US ROUTE 1 OVER THE PISCATAQUA RIVER

PLC SYSTEM BLOCK DIAGRAM

REVISIONS AFTER PROPOSAL	BY	DATE		BY	DATE
DESIGNED	MCG	01/12	CHECKED	GP	01/12
DRAWN	SMP	01/12	CHECKED	DR	01/12
QUANTITIES	XXX	XX/XX	CHECKED	XXX	XX/XX

ISSUE DATE
REV. DATE

FEDERAL PROJECT NO. BHF-T-0101(015)

SHEET NO. XXX

TOTAL SHEETS XXX

BRIDGE SHEET E17 OF E67

FILE NUMBER XXX-X-X

DATE/TIME:1/18/2012 5:38:19 PM USER:gstephenson
FILE NAME:s:\FFLw00\CADD\55519_Portsmouth_Rt1_Memorial_Bridge\E1\Plans\13678F-E17_PLCBk.dgn
MODEL NAME:PLCD_1
LAST SAVE:1/17/2012 1:57:55 PM

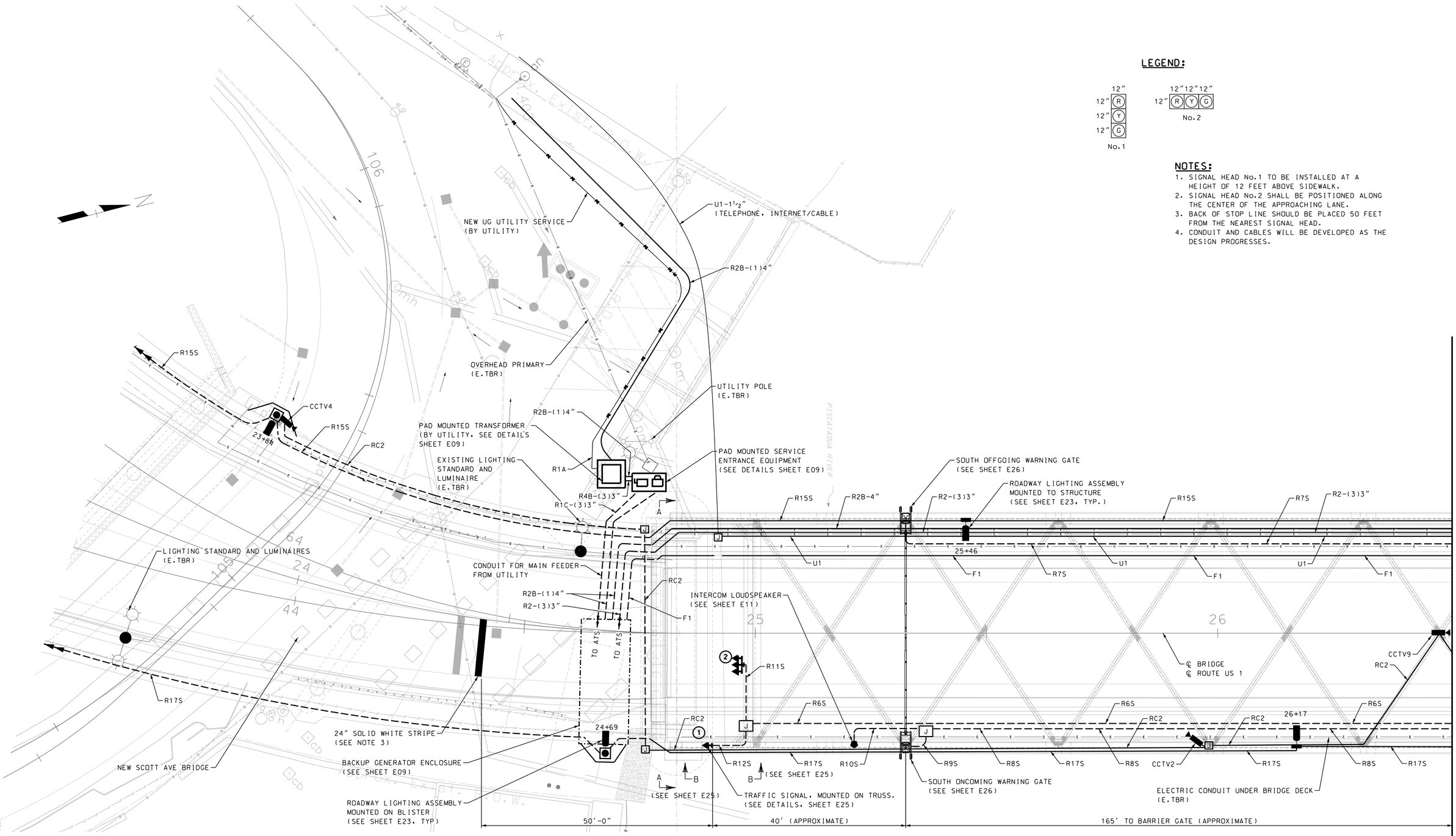

LEGEND:

NOTES:

1. SIGNAL HEAD No.1 TO BE INSTALLED AT A HEIGHT OF 12 FEET ABOVE SIDEWALK.
2. SIGNAL HEAD No.2 SHALL BE POSITIONED ALONG THE CENTER OF THE APPROACHING LANE.
3. BACK OF STOP LINE SHOULD BE PLACED 50 FEET FROM THE NEAREST SIGNAL HEAD.
4. CONDUIT AND CABLES WILL BE DEVELOPED AS THE DESIGN PROGRESSES.

PLAN AT ROADWAY LEVEL

1" = 10'-0"

80% SUBMISSION
JANUARY 18, 2012

ARCHER WESTERN CONTRACTORS

HNTB
HNTB Corporation
The HNTB Companies
Engineers Architects Planners

SUBDIRECTORY	.DGN LOCATOR	SHEET SCALE
Plans	13678F-E18-22_Rwy	1" = 10'-0"

STATE OF NEW HAMPSHIRE
DEPARTMENT OF TRANSPORTATION * BUREAU OF BRIDGE DESIGN

TOWN PORTSMOUTH, NH - KITTERY, ME | BRIDGE NO. 247/084 | STATE PROJECT 13678

LOCATION US ROUTE 1 OVER THE PISCATAQUA RIVER

ROADWAY ELECTRICAL PLAN 1

REVISIONS AFTER PROPOSAL		BY	DATE		BY	DATE
	DESIGNED	MCG	01/12	CHECKED	GP	01/12
	DRAWN	MDC	01/12	CHECKED	DR	01/12
	QUANTITIES	XXX	XX/XX	CHECKED	XXX	XX/XX

ISSUE DATE	FEDERAL PROJECT NO.	SHEET NO.	TOTAL SHEETS
REV. DATE	BHF-T-0101(015)	XXX	XXX

BRIDGE SHEET: E18 OF E67
FILE NUMBER: XXX-X-X

DATE/TIME: 1/18/2012 3:32:58 PM USER: gstephenson
FILE NAME: s:\FFLW00\CADD\55519_Portsmouth_Rt1_Memorial_Bridge\E1\Plans\13678F-E18-22_Rwy.dgn
MODEL NAME: Plan1
LAST SAVE: 1/17/2012 8:48:02 AM

NOTES:

1. CONDUIT AND CABLES WILL BE DEVELOPED AS THE DESIGN PROGRESSES.

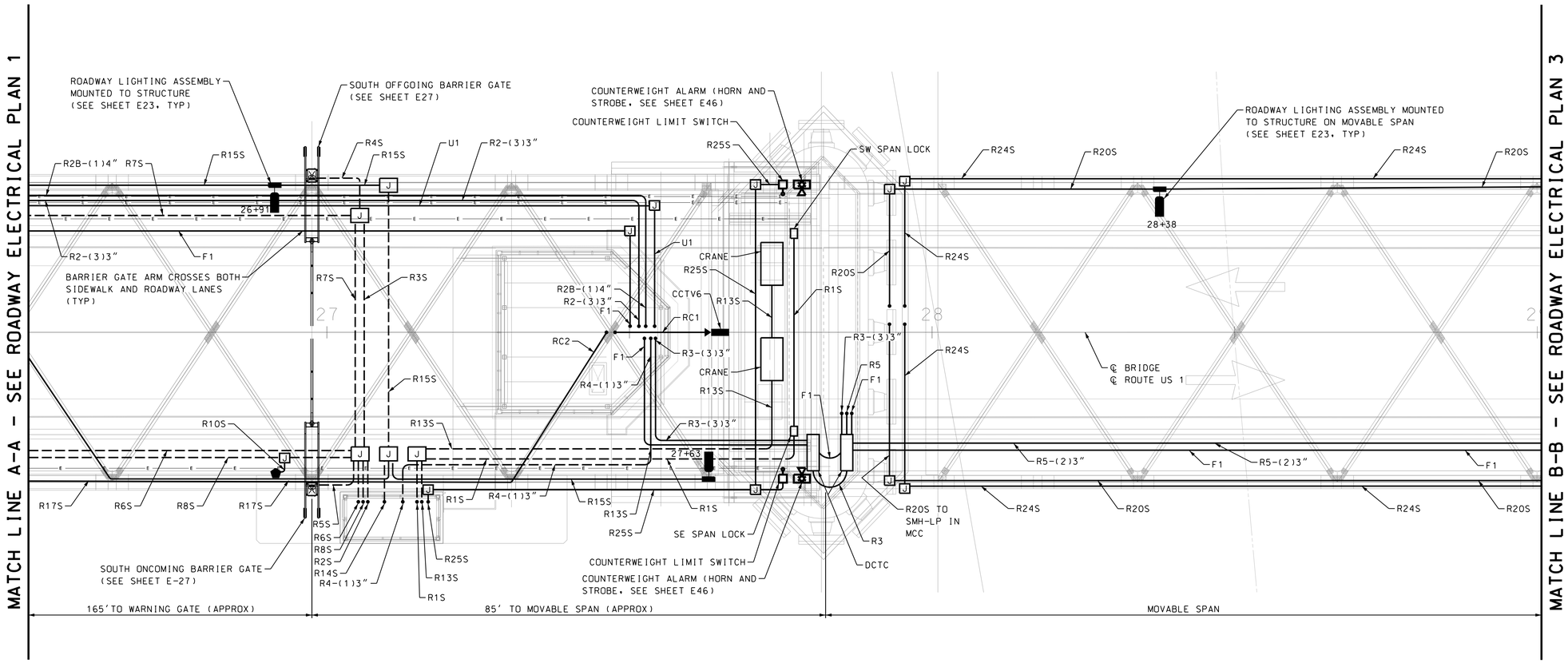

PLAN AT ROADWAY LEVEL

1" = 10'-0"

80% SUBMISSION
JANUARY 18, 2012

ARCHER WESTERN CONTRACTORS

HNTB
HNTB Corporation
The HNTB Companies
Engineers Architects Planners

SUBDIRECTORY	.DGN LOCATOR	SHEET SCALE
Plans	13678F-E18-22_Rwy	1" = 10'-0"

STATE OF NEW HAMPSHIRE
DEPARTMENT OF TRANSPORTATION * BUREAU OF BRIDGE DESIGN

TOWN PORTSMOUTH, NH - KITTERY, ME BRIDGE NO. 247\084 STATE PROJECT 13678

LOCATION US ROUTE 1 OVER THE PISCATAQUA RIVER

ROADWAY ELECTRICAL PLAN 2

REVISIONS AFTER PROPOSAL		BY	DATE		BY	DATE
	DESIGNED	MCG	01/12	CHECKED	GP	01/12
	DRAWN	MDC	01/12	CHECKED	DR	01/12
	QUANTITIES	XXX	XX/XX	CHECKED	XXX	XX/XX

ISSUE DATE	FEDERAL PROJECT NO.	SHEET NO.	TOTAL SHEETS
REV. DATE	BHF-T-0101(015)	XXX	XXX

BRIDGE SHEET: E19 OF E67

FILE NUMBER: XXX-X-X

DATE/TIME:1/18/2012 4:39:04 PM USER:gstephenson
FILE NAME:U:\55519_Portsmouth_Rt1_Memorial_Bridge\Plans\13678F-E18-22_Rwy.dgn
MODEL NAME:Plan2
LAST SAVE:1/18/2012 4:38:32 PM

NOTES:

1. CONDUIT AND CABLES WILL BE DEVELOPED AS THE DESIGN PROGRESSES.

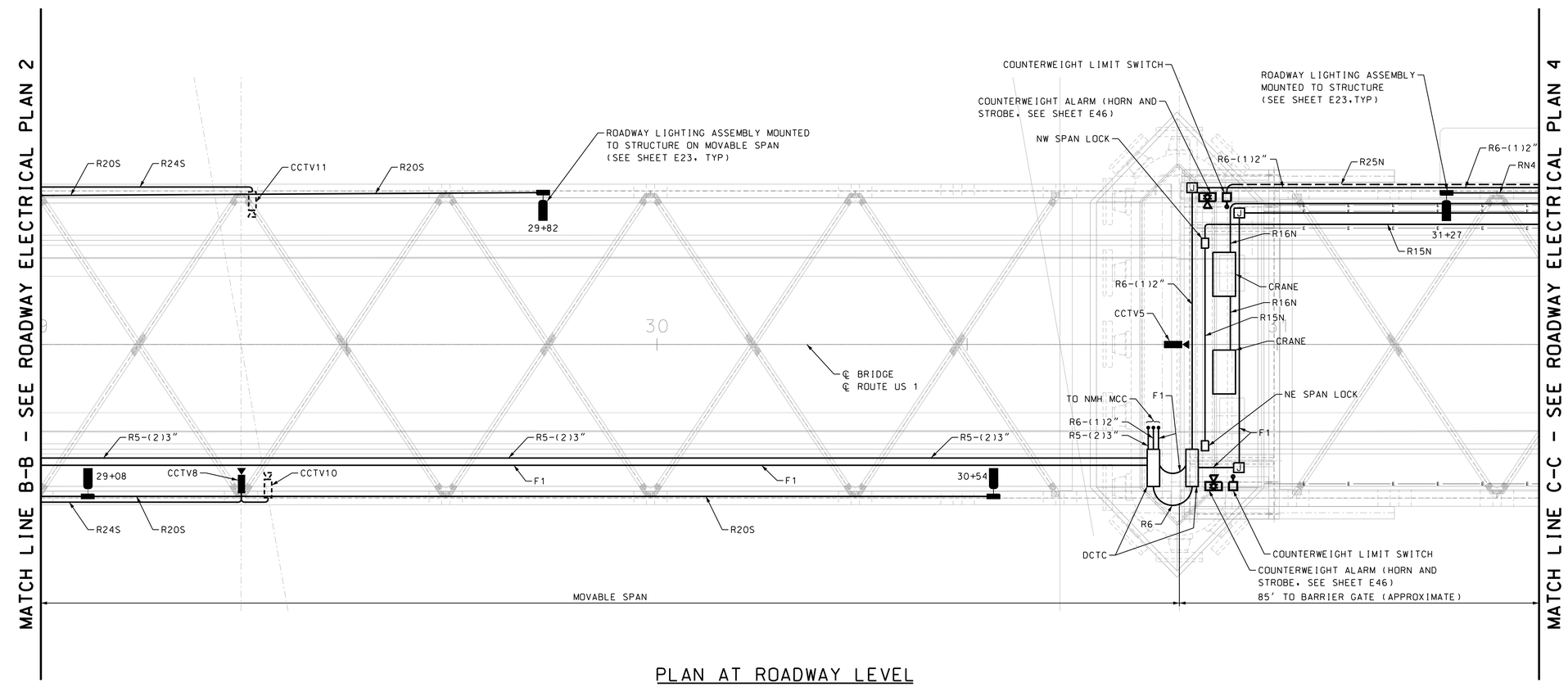

PLAN AT ROADWAY LEVEL

1" = 10'-0"

80% SUBMISSION
JANUARY 18, 2012

ARCHER WESTERN CONTRACTORS

HNTB
HNTB Corporation
The HNTB Companies
Engineers Architects Planners

SUBDIRECTORY	.DGN LOCATOR	SHEET SCALE
Plans	13678F-E18-22_Rwy	1" = 10'-0"

STATE OF NEW HAMPSHIRE
DEPARTMENT OF TRANSPORTATION * BUREAU OF BRIDGE DESIGN

TOWN PORTSMOUTH, NH - KITTERY, ME | BRIDGE NO. 247/084 | STATE PROJECT 13678

LOCATION US ROUTE 1 OVER THE PISCATAQUA RIVER

ROADWAY ELECTRICAL PLAN 3

REVISIONS AFTER PROPOSAL		BY	DATE		BY	DATE
	DESIGNED	MCG	01/12	CHECKED	GP	01/12
	DRAWN	MDC	01/12	CHECKED	DR	01/12
	QUANTITIES	XXX	XX/XX	CHECKED	XXX	XX/XX

ISSUE DATE	FEDERAL PROJECT NO.	SHEET NO.	TOTAL SHEETS
REV. DATE	BHF-T-0101(015)	XXX	XXX

BRIDGE SHEET E20 OF E67

FILE NUMBER XXX-X-X

DATE/TIME: 1/18/2012 3:34:05 PM USER: gstephenson
FILE NAME: s:\FFLw00\CADD\55519_Portsmouth_Rt1_Memorial_Bridge\E1\Plans\13678F-E18-22_Rwy.dgn
MODEL NAME: Plan3
LAST SAVE: 1/17/2012 8:48:02 AM

SIGNAL LEGEND

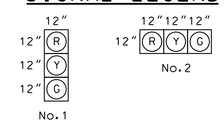

NOTES:

1. SIGNAL HEAD No.1 TO BE INSTALLED AT A HEIGHT OF 12 FEET ABOVE SIDEWALK.
2. SIGNAL HEAD No.2 SHALL BE POSITIONED ALONG THE CENTER OF THE APPROACHING LANE.
3. CONDUIT AND CABLES WILL BE DEVELOPED AS THE DESIGN PROGRESSES.

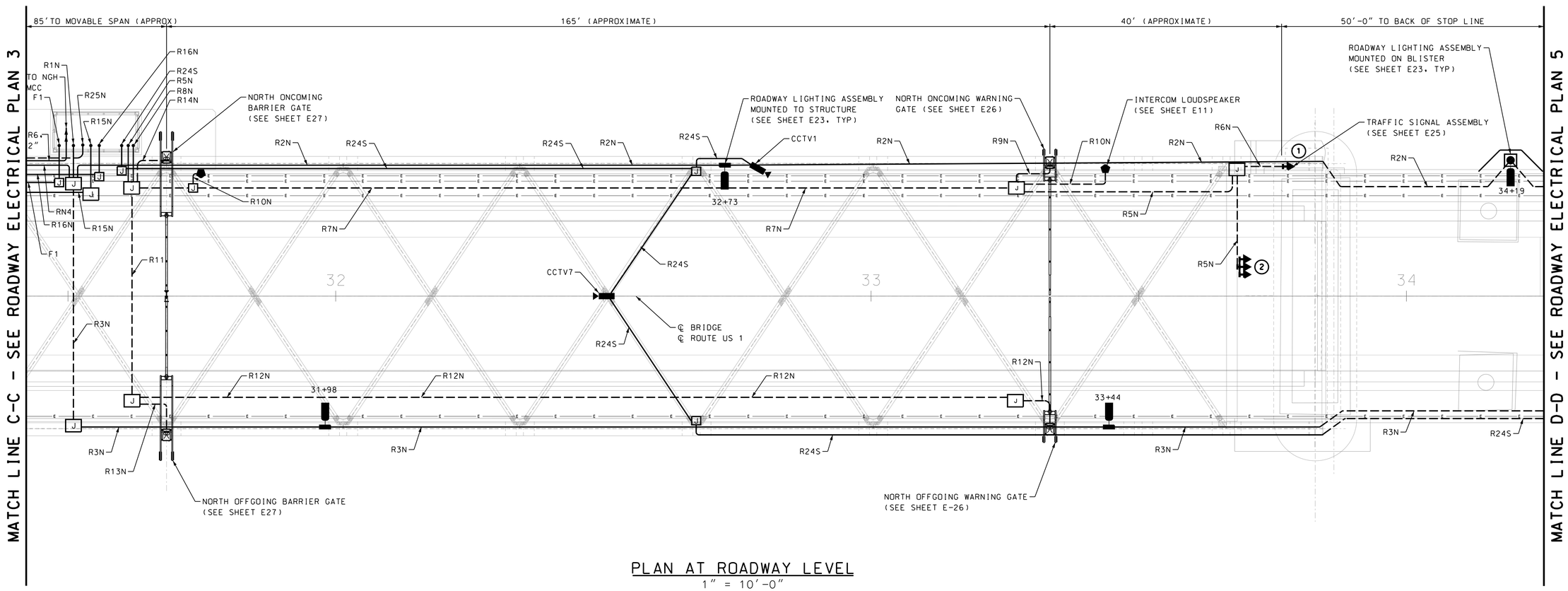

PLAN AT ROADWAY LEVEL

1" = 10'-0"

DATE/TIME: 1/18/2012 4:39:35 PM USER: gstephenson
FILE NAME: u:\55519_Portsmouth_Rt1_Memorial_Bridge\E1\Plans\13678F-E18-22_Rwy.dgn
MODEL NAME: Plan4
LAST SAVE: 1/18/2012 4:38:32 PM

80% SUBMISSION
JANUARY 18, 2012

ARCHER WESTERN CONTRACTORS

HNTB
HNTB Corporation
The HNTB Companies
Engineers Architects Planners

SUBDIRECTORY	.DGN LOCATOR	SHEET SCALE
Plans	13678F-E18-22_Rwy	1" = 10'-0"

STATE OF NEW HAMPSHIRE
DEPARTMENT OF TRANSPORTATION * BUREAU OF BRIDGE DESIGN

TOWN PORTSMOUTH, NH - KITTERY, ME BRIDGE NO. 247/084 STATE PROJECT 13678

LOCATION US ROUTE 1 OVER THE PISCATAQUA RIVER

ROADWAY ELECTRICAL PLAN 4

REVISIONS AFTER PROPOSAL		BY	DATE		BY	DATE
	DESIGNED	MCG	01/12	CHECKED	GP	01/12
	DRAWN	MDC	01/12	CHECKED	DR	01/12
	QUANTITIES	XXX	XX/XX	CHECKED	XXX	XX/XX

ISSUE DATE	FEDERAL PROJECT NO.	SHEET NO.	TOTAL SHEETS
REV. DATE	BHF-T-0101(015)	XXX	XXX

BRIDGE SHEET E21 OF E67

FILE NUMBER XXX-X-X

NOTES:

1. BACK OF STOP LINE SHOULD BE PLACED 50 FEET FROM THE NEAREST SIGNAL HEAD.
2. CONDUIT AND CABLES WILL BE DEVELOPED AS THE DESIGN PROGRESSES.

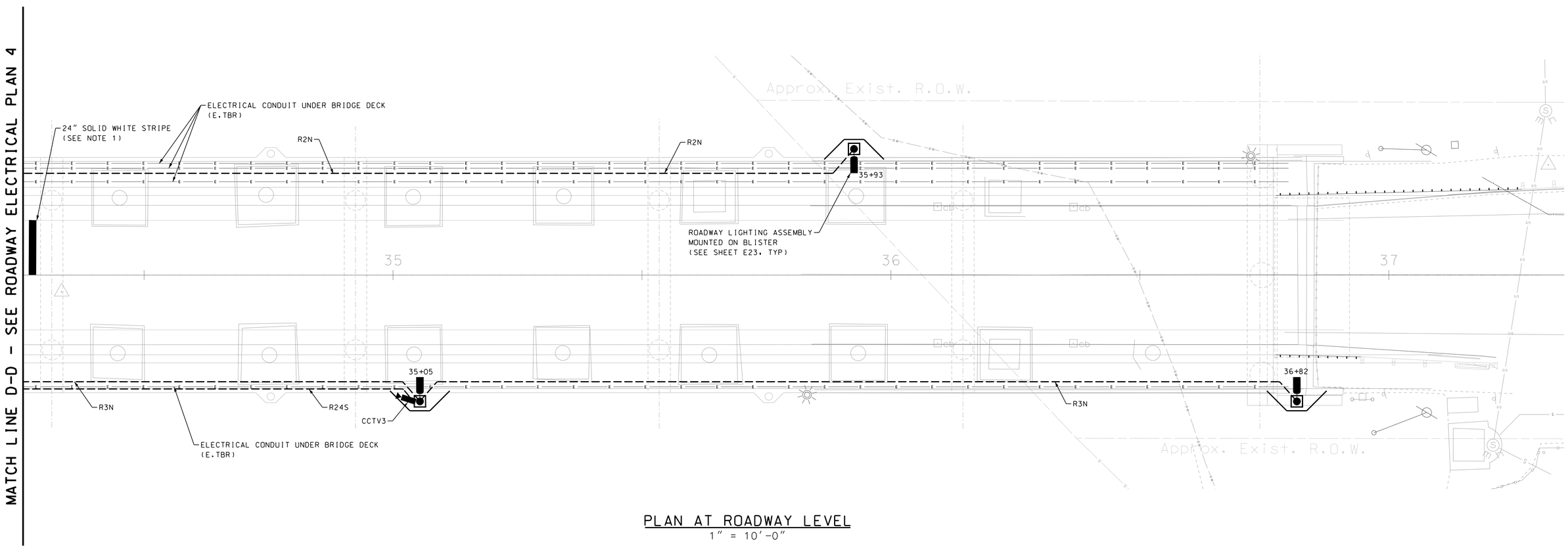

PLAN AT ROADWAY LEVEL

1" = 10'-0"

DATE/TIME: 1/18/2012 3:34:07 PM USER: gstephenson
FILE NAME: s:\FFLw00\CADD\55519_Portsmouth_Rt1_Memorial_Bridge\E1\Plans\13678F-E18-22_Rwy.dgn
MODEL NAME: Plan5
LAST SAVE: 1/17/2012 8:48:02 AM

80% SUBMISSION
JANUARY 18, 2012

ARCHER WESTERN CONTRACTORS

HNTB
HNTB Corporation
The HNTB Companies
Engineers Architects Planners

SUBDIRECTORY	.DGN LOCATOR	SHEET SCALE
Plans	13678F-E18-22_Rwy	1" = 10'-0"

STATE OF NEW HAMPSHIRE
DEPARTMENT OF TRANSPORTATION * BUREAU OF BRIDGE DESIGN

TOWN PORTSMOUTH, NH - KITTERY, ME BRIDGE NO. 247/084 STATE PROJECT 13678

LOCATION US ROUTE 1 OVER THE PISCATAQUA RIVER

ROADWAY ELECTRICAL PLAN 5

BRIDGE SHEET: E22 OF E67

REVISIONS AFTER PROPOSAL		BY	DATE		BY	DATE
	DESIGNED	MCG	01/12	CHECKED	GP	01/12
	DRAWN	MDC	01/12	CHECKED	DR	01/12
	QUANTITIES	XXX	XX/XX	CHECKED	XXX	XX/XX

FILE NUMBER: XXX-X-X

ISSUE DATE	FEDERAL PROJECT NO.	SHEET NO.	TOTAL SHEETS
REV. DATE	BHF-T-0101(015)	XXX	XXX

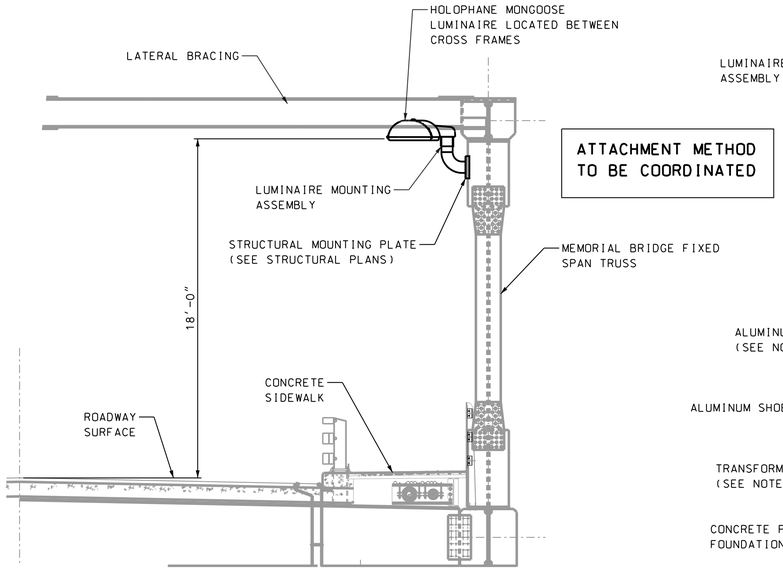

ATTACHMENT METHOD TO BE COORDINATED

TYPE 1

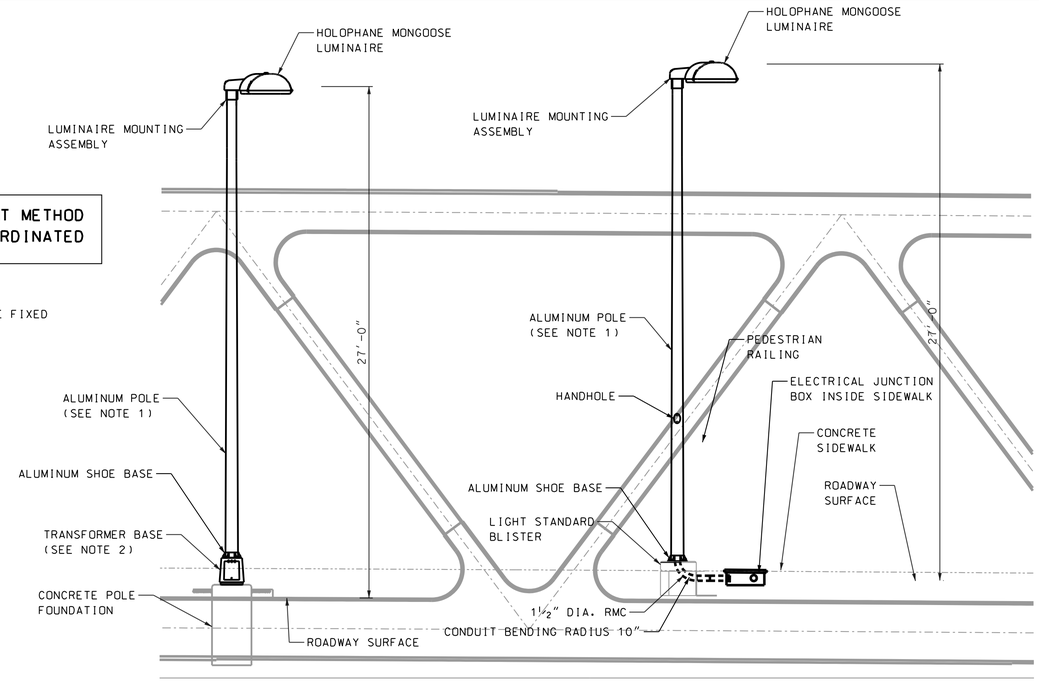

TYPE 2

PORTSMOUTH, NH

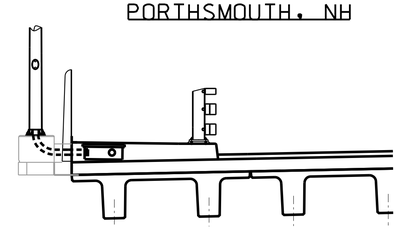

KITTERY, ME

TYPE 3

LIGHTING STANDARD DETAILS

1/4" = 1'-0"

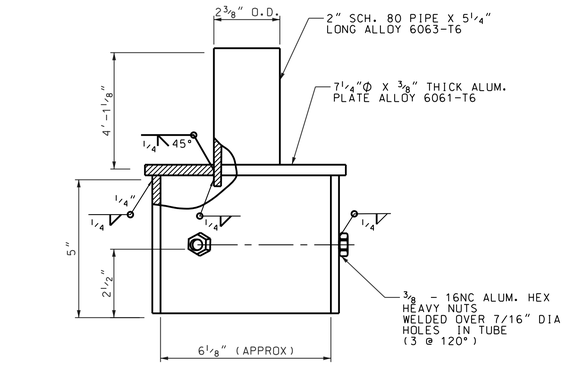

LUMINAIRE MOUNTING ASSEMBLY

NOT TO SCALE
(SEE NOTE 3)

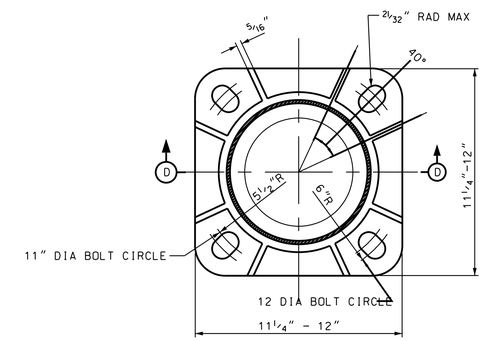

ALUMINUM ALLOY 365-T6 ASTM SPEC. NO. SAND CST'G B26 OR PERM. MOLD CST B108 ASTM ALLOY DESIG. SG 70A

PLAN

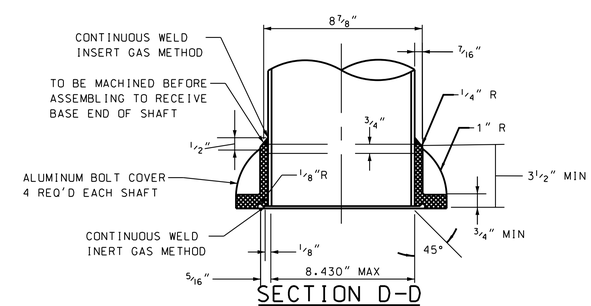

SECTION D-D
ALUMINUM SHOE BASE

NOT TO SCALE

SYMBOL	ROADWAY LIGHTING FIXTURE SCHEDULE					
	DESCRIPTION	LAMP	LUMINAIRE	VOLTAGE	MOUNTING METHOD	MOUNTING HEIGHT
	PROPOSED TYPE 1 LIGHTING STANDARD	175W MH	HOLOPHANE MONGOOSE G-175PM-MA-L-NF	120V	STRUCTURE MOUNTED	18 FEET
	PROPOSED TYPE 2 LIGHTING STANDARD	175W MH	HOLOPHANE MONGOOSE G-175PM-MA-L-NF	120V	GROUND MOUNTED	27 FEET
	PROPOSED TYPE 3 LIGHTING STANDARD	175W MH	HOLOPHANE MONGOOSE G-175PM-MA-L-NF	120V	BLISTER MOUNTED	27 FEET
	EXISTING LIGHTING STANDARD	150W HPS	EXISITNG	120V	WOOD POLE MOUNTED	35 FEET

NOTES:

1. ALL POLES SHALL CONFORM TO AASHTO "STANDARD SPECIFICATIONS FOR STRUCTURAL SUPPORTS FOR HIGHWAY SIGNS, LUMINARIES, AND TRAFFIC SIGNALS" LATEST VERSION. PROVIDE SHOP DRAWINGS THAT ARE SIGNED AND SEALED BY A PROFESSIONAL ENGINEER THAT IS LICENSED TO PRACTICE IN NEW HAMPSHIRE.
2. TRANSFORMER BASE SHALL BE PRE QUALIFIED BY NHDOT.
3. DIMENSIONS SHOWN ARE FOR REFERENCE ONLY. COORDINATE DESIGN OF LUMINAIRE MOUNTING ASSEMBLY WITH FINAL POLE.

LEGEND

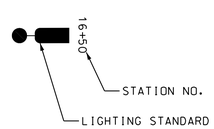

80% SUBMISSION
JANUARY 18, 2012

ARCHER WESTERN CONTRACTORS

HNTB
HNTB Corporation
The HNTB Companies
Engineers Architects Planners

SUBDIRECTORY	.DGN LOCATOR	SHEET SCALE
Plans	13678F-E23_RwyLtg	AS SHOWN

STATE OF NEW HAMPSHIRE
DEPARTMENT OF TRANSPORTATION * BUREAU OF BRIDGE DESIGN

TOWN PORTSMOUTH, NH - KITTERY, ME BRIDGE NO. 247/084 STATE PROJECT 13678

LOCATION US ROUTE 1 OVER THE PISCATAQUA RIVER

ROADWAY LIGHTING SCHEDULE AND DETAILS

REVISIONS AFTER PROPOSAL	BY	DATE		BY	DATE
DESIGNED	MCG	01/12	CHECKED	GP	01/12
DRAWN	CT	01/12	CHECKED	DR	01/12
QUANTITIES	XXX	XX/XX	CHECKED	XXX	XX/XX

ISSUE DATE
REV. DATE

FEDERAL PROJECT NO. BHF-T-0101(015)
SHEET NO. XXX

BRIDGE SHEET E23 OF E67
FILE NUMBER XXX-X-X
TOTAL SHEETS XXX

DATE/TIME:1/18/2012 3:49:35 PM USER:gstephenson
FILE NAME:U:\55519_Portsmouth_Rt1_Memorial_Bridge\Elsplans\13678F-E23_RwyLtg.dgn
MODEL NAME:Plan
LAST SAVE:1/18/2012 3:49:28 PM

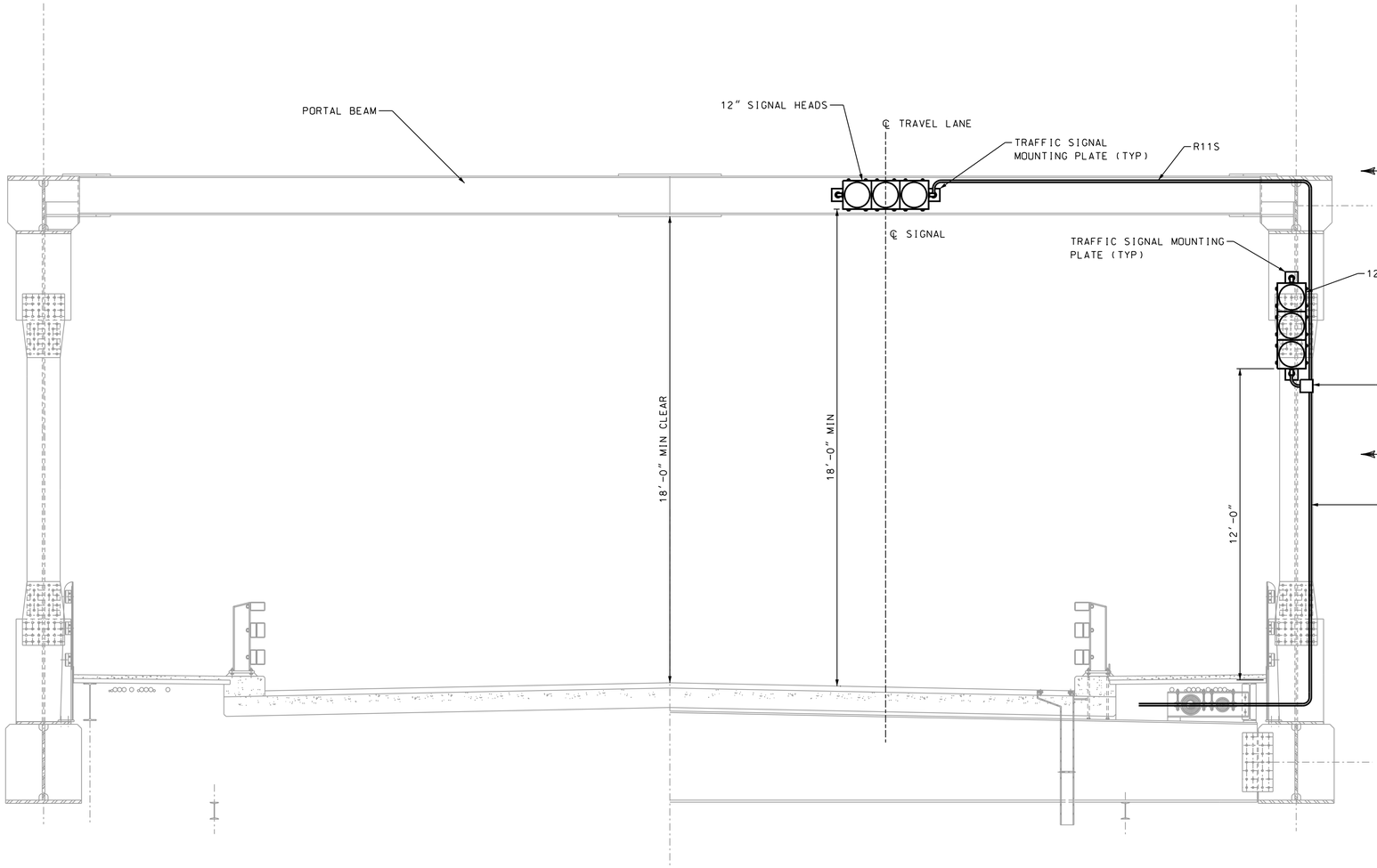

SOUTH FIXED TRUSS PORTAL (LOOKING NORTH)
SECTION A-A

3/8" = 1'-0"

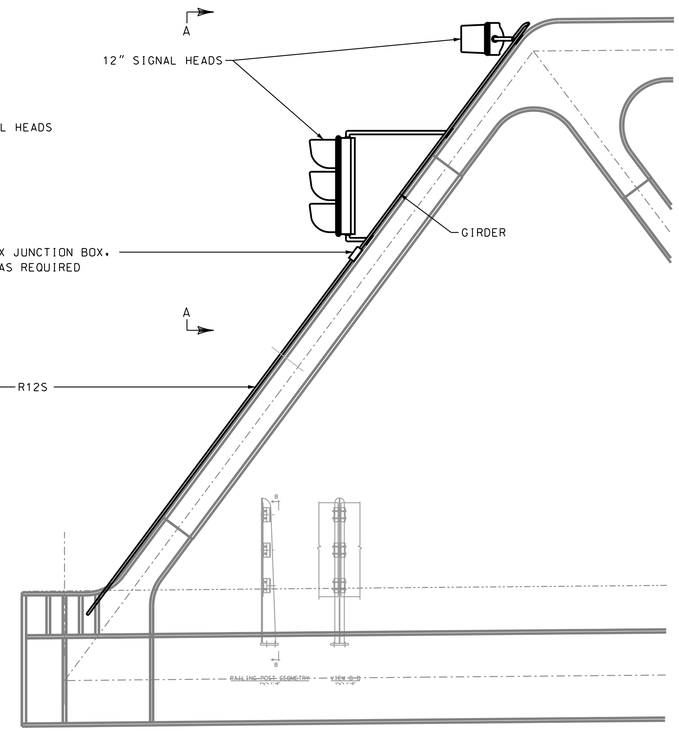

PARTIAL SIDE VIEW B-B

3/8" = 1'-0"

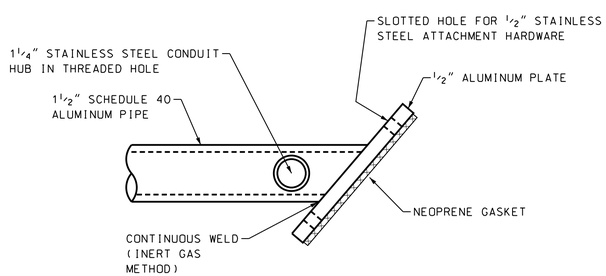

TRAFFIC SIGNAL MOUNTING PLATE

NOT TO SCALE

NOTE:

1. SOUTH TRAFFIC SIGNALS SHOWN. NORTH TRAFFIC SIGNALS SIMILAR.
2. TRAFFIC SIGNAL EQUIPMENT, INCLUDING SIGNAL HEADS, FITTINGS, WIRING, LAMPS, ETC. SHALL BE FURNISHED AND INSTALLED IN ACCORDANCE WITH NHDOT STANDARD DRAWINGS AND STANDARD SPECIFICATIONS SECTION 616 "TRAFFIC SIGNALS."
3. THE SIGNAL ATTACHMENT HARDWARE SHALL BE DESIGNED TO MEET THE REQUIREMENTS OUTLINED IN THE "STANDARD SPECIFICATIONS FOR STRUCTURAL SUPPORTS FOR HIGHWAY SIGNS, LUMINAIRES AND TRAFFIC SIGNALS," PUBLISHED BY AASHTO, 2007 VERSION WITH ALL INTERIMS EXCEPT AS MODIFIED BY NHDOT STANDARD SPECIFICATIONS.
4. ALL MOUNTING HARDWARE FOR EACH TRAFFIC SIGNAL SHALL BE FURNISHED BY THE SAME MANUFACTURER AND SUBMITTED AS A COMPLETE SHOP DRAWING PACKAGE FOR REVIEW.
5. BACKGROUND LAYOUTS SHOWN ARE FOR CONCEPTUAL PURPOSES ONLY. SEE STRUCTURAL DRAWINGS FOR COMPLETE DETAILS.
6. REFER TO SHEETS E18 AND E21 FOR ADDITIONAL NOTES AND LEGEND.

80% SUBMISSION
JANUARY 18, 2012

ARCHER WESTERN CONTRACTORS

HNTB
HNTB Corporation
The HNTB Companies
Engineers Architects Planners

SUBDIRECTORY	.DGN LOCATOR	SHEET SCALE
Plans	13678F-E25_TSignal	3/8" = 1'-0"

STATE OF NEW HAMPSHIRE
DEPARTMENT OF TRANSPORTATION * BUREAU OF BRIDGE DESIGN

TOWN PORTSMOUTH, NH - KITTERY, ME BRIDGE NO. 247/084 STATE PROJECT 13678
LOCATION US ROUTE 1 OVER THE PISCATAQUA RIVER

TRAFFIC SIGNAL DETAILS

REVISIONS AFTER PROPOSAL		BY	DATE		BY	DATE
	DESIGNED	MCG	01/12	CHECKED	GP	01/12
	DRAWN	MDC	01/12	CHECKED	DR	01/12
	QUANTITIES	XXX	XX/XX	CHECKED	XXX	XX/XX
	ISSUE DATE					
	REV. DATE					

FEDERAL PROJECT NO. BHF-T-0101(015)
SHEET NO. XXX
BRIDGE SHEET E25 OF E67
FILE NUMBER XXX-X-X
TOTAL SHEETS XXX

DATE/TIME: 1/18/2012 3:34:10 PM USER: gstephenson
FILE NAME: s:\FFLw00\CADD\55519_Portsmouth_Rt1_Memorial_Bridge\E1\Plans\13678F-E25_TSignal.dgn
MODEL NAME: Plan
LAST SAVE: 1/18/2012 10:53:58 AM

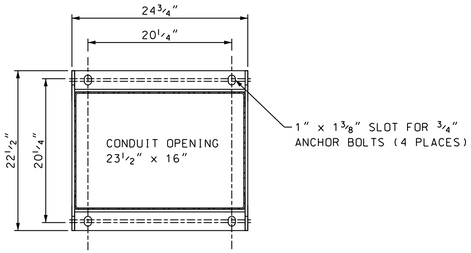

SECTION A-A

3/8" = 1'-0"

GATE GENERAL NOTES:

1. GATE LAYOUTS SHOWN ARE TYPICAL FOR EACH SET OF GATES TO BE PROVIDED. UNLESS OTHERWISE NOTED. TO THE GREATEST EXTENT POSSIBLE, PROVIDE STANDARD MANUFACTURER CONFIGURATIONS AND COMPONENTS. HOWEVER THE CONTRACTOR IS HEREBY ADVISED THAT PORTIONS OF THE GATE EQUIPMENT MAY REQUIRE CUSTOM DESIGN AND FABRICATION IN ORDER TO INTERFACE THE GATE TO THE BRIDGE STRUCTURE. VERIFY/ADJUST ARM LENGTHS AND OFFSET ARM CHANNELS ACCORDING TO FINAL ROAD DIMENSIONS FOR EACH GATE LOCATION. SUBMIT FINAL DIMENSIONS AS A SEPARATE SHOP DRAWING SUBMISSION AFTER INSTALLATION, FOR APPROVAL BY THE ENGINEER.
2. PROVIDE STAINLESS STEEL GATE HARDWARE UNLESS OTHERWISE NOTED. INSTALLATION AND MOUNTING HARDWARE SHALL BE AS PER MANUFACTURER'S RECOMMENDATIONS.
3. SEE STRUCTURAL PLANS FOR DETAILS OF BRIDGE SUPERSTRUCTURE, INCLUDING CANTILEVERED GATE MOUNTING PLATFORM.
4. PROVIDE A 2-YEAR WARRANTY THAT COVERS GATES AND RELATED EQUIPMENT AGAINST DEFECTIVE MATERIAL AND COMPONENTS. MANUFACTURER SHALL FURNISH REPLACEMENT PARTS FOR A MINIMUM OF 10 YEARS. REPLACEMENT PARTS FOR STANDARD COMPONENTS SHALL BE MADE AVAILABLE WITHIN 1 WORKING DAY. FUSES AND OTHER COMPONENTS DESIGNED FOR A LIFE LESS THAN 2 YEARS SHALL BE COVERED FOR THE RATED LIFE OF THE COMPONENT OR THE WARRANTY PERIOD OF THE COMPONENT MANUFACTURER. PROVIDE DOCUMENTATION OF THE WARRANTY UNDER SEPARATE COVER TO THE ENGINEER.
5. GATES SHALL CONFORM TO AASHTO LRFD STANDARD SPECIFICATIONS FOR MOVABLE HIGHWAY BRIDGES, CURRENT EDITION.

GATE SPECIFICATIONS (ALL GATES):

ALL GATES PROVIDED SHALL MEET THE FOLLOWING SPECIFICATIONS:

GATE CABINET	HOT-DIPPED GALVANIZED STEEL, PAINTED ALUMINUM
ACCESS DOORS	FRONT AND BACK OF ENCLOSURE, MATERIAL TO MATCH CABINET. PROVIDE SPLIT DOORS WHERE REQUIRED TO PROVIDE ACCESS.
DOOR HINGE	BRASS ALLOY, STRAP TYPE WITH STAINLESS STEEL PINS, ALLOWING DOOR TO BE REMOVED
DOOR GASKET	BULB-TYPE NEOPRENE
DOOR HANDLE	T-HANDLE WITH THREE-POINT LATCH AND PROVISION FOR PADLOCK
BOLT PATTERN	AS SHOWN ON PLANS
ARM SHAFT OPENINGS	O-RING SEALS TO PREVENT WATER ENTRY INTO CABINET
MANUAL DISCONNECT	PRE-WIRED AT THE FACTORY TO BREAK THE MAIN MOTOR LEADS, TO PROTECT PERSONNEL DURING SERVICE
HANDCRANK SAFETY SWITCH	PROVIDED TO PREVENT POWERED ACTUATION OF THE GATE DURING MANUAL OPERATION.
DOOR SWITCH	WIRED TO DISCONNECT POWER WHEN EITHER DOOR IS OPENED. PROVIDED WITH A PULL-TO-OVERRIDE FEATURE FOR TEST OPERATION THAT SHALL AUTOMATICALLY RESET WHEN DOORS ARE CLOSED.
TERMINAL BLOCKS	PRESSURE-TYPE, MODULAR TERMINAL BLOCKS, FULLY LABELED AND CLEARLY CODED TO WIRING DIAGRAMS.
CONNECTIONS	CONNECTIONS TO SCREW-TYPE TERMINALS SHALL HAVE LUGS
COMPONENT ACCESS	WITHIN AN ELECTRICAL ENCLOSURE MOUNTED FACING THE ROADWAY SIDE ACCESS OPENING, EXCEPT WHERE CUSTOM COMPONENTS REQUIRED BY THE CUSTOMER PREVENT THIS ARRANGEMENT.
CONDUCTORS	#16 AWG STRANDED, MINIMUM, RUN IN CONDUIT WHERE PRACTICAL.
CONDUIT ENTRANCE	THROUGH OPEN BOTTOM OF GATE CABINET
ARM SWING	90 DEGREES MINIMUM
COUNTERWEIGHT	HOT-DIP GALVANIZED, SECTIONAL-TYPE, BALANCED AT THE FACTORY
HAND CRANK	PROVIDED FOR MANUAL OPERATION
VELOCITY	FOLLOWS A SINUSOIDAL PATTERN. ZERO VELOCITY AT BEGIN AND END OF FULL MOTION PATH, ACCELERATING SMOOTHLY TO MAXIMUM VELOCITY AT MID-TRAVEL
MOTOR	C-FACE DESIGN MOUNTED DIRECTLY TO THE TRANSMISSION. THE MOTOR SHALL BE INSTANTLY REVERSING AND OVERLOAD PROTECTED.
BRAKE	SOLENOID-RELEASE AUTOMATIC BRAKE, WITH MANUAL OPERATION CAPABILITY THROUGH MANUAL RELEASE
BEARINGS	RELUBRICABLE BALL AND TAPERED ROLLER BEARINGS
REFLECTORS	PRE-STRIPED RED AND WHITE DIAMOND GRADE REFLECTIVE SHEETING. STRIPES SHALL BE 16 INCHES WIDE, AND SHALL SLOPE AT 45 DEGREES DOWN TOWARD THE ARM TIP.
WARNING LIGHT	4.5 INCHES WITH RED PLASTIC FRESNEL LENS, VISIBLE FROM 360 DEGREES
LAMP	LED WITH 100,000 HOUR LAMP LIFE
LIMIT SWITCH	SELF-CONTAINED UNIT, PROVIDING 8 INDEPENDENT SPDT CONTROL SWITCHES WITH REMOVABLE COVER, ADJUSTABLE WITH GATE ARM IN ANY POSITION. SWITCHES SHALL BE CONTROLLED BY INDIVIDUALLY ADJUSTABLE CAMS
SWITCH RATINGS	15 AMPS, 480 VAC

GATE SPECIFICATIONS (WARNING GATES ONLY):

THE FOLLOWING SPECIFICATIONS APPLY ONLY TO WARNING GATES:

MODEL	MODEL VW-4, AS MANUFACTURED BY B&B ROADWAY, LLC (PHONE: 888-560-2060), OR APPROVED EQUAL
GATE ARM	6005-T5 ALUMINUM EXTRUDED TUBING
TRUSS CABLES	STAINLESS STEEL, FURNISHED WHERE REQUIRED BY MANUFACTURER
GATE ARM BASE	PROVIDED WITH SACRIFICIAL SHEAR PIN MECHANISM TO MINIMIZE DAMAGE TO THE GATE AND VEHICLE IN THE EVENT OF A COLLISION
OPERATION TIME	11 SECONDS OR FASTER (EITHER RAISE OR LOWER)

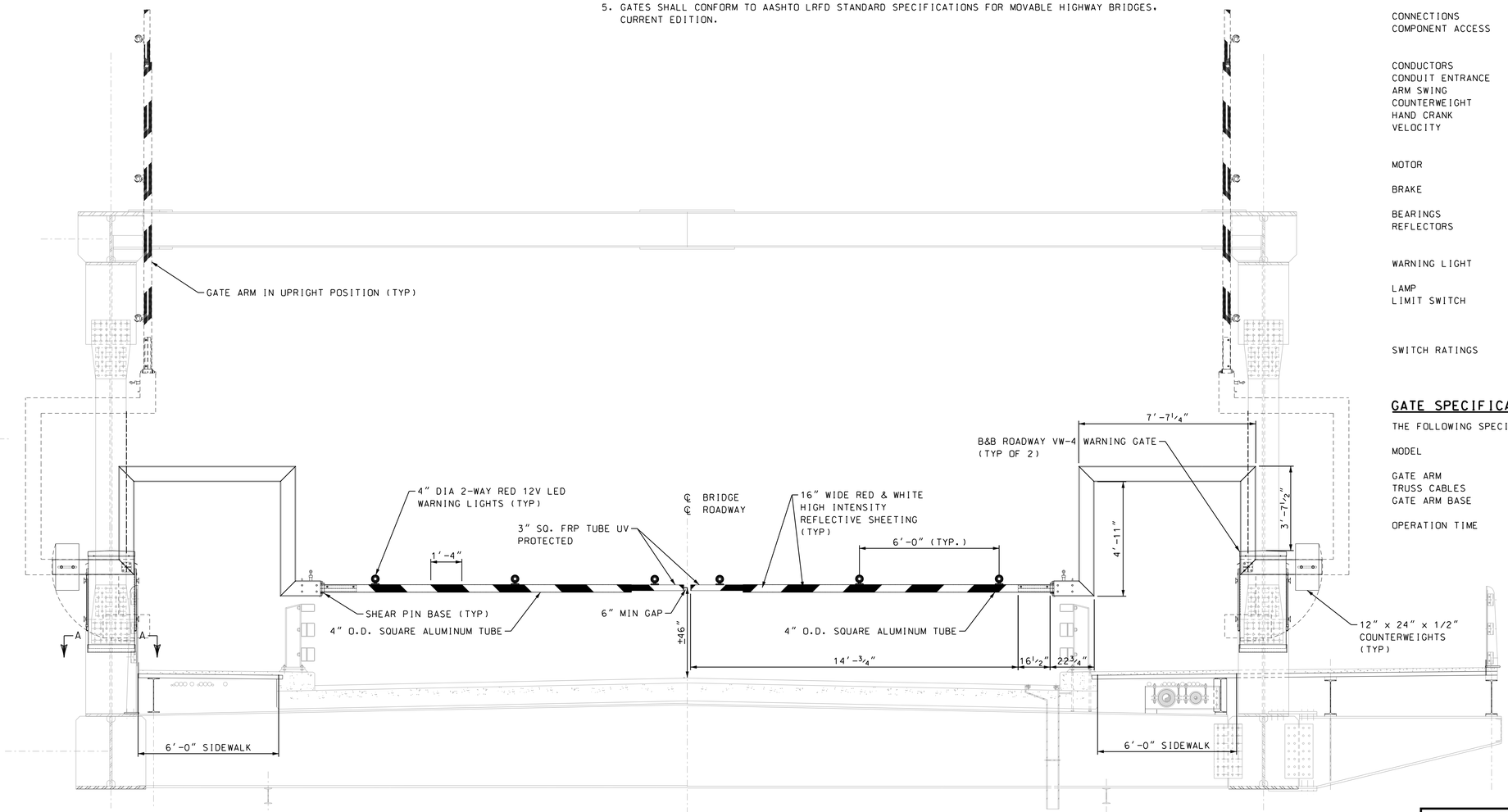

SOUTH WARNING GATE (LOOKING SOUTH)

SCALE: 3/8" = 1'-0"

80% SUBMISSION
JANUARY 18, 2012

ARCHER WESTERN CONTRACTORS

HNTB
HNTB Corporation
The HNTB Companies
Engineers Architects Planners

SUBDIRECTORY	.DGN LOCATOR	SHEET SCALE
Plans	13678F-E26_WarnGt	3/8" = 1'-0"

STATE OF NEW HAMPSHIRE
DEPARTMENT OF TRANSPORTATION * BUREAU OF BRIDGE DESIGN

TOWN PORTSMOUTH, NH - KITTERY, ME | BRIDGE NO. 247/084 | STATE PROJECT 13678

LOCATION US ROUTE 1 OVER THE PISCATAQUA RIVER

WARNING GATE DETAILS

REVISIONS AFTER PROPOSAL		BY	DATE		BY	DATE
	DESIGNED	MCG	01/12	CHECKED	GP	01/12
	DRAWN	MDC	01/12	CHECKED	DR	01/12
	QUANTITIES	XXX	XX/XX	CHECKED	XXX	XX/XX
	ISSUE DATE					
	REV. DATE					

FEDERAL PROJECT NO. BHF-T-0101(015)

SHEET NO. XXX

BRIDGE SHEET E26 OF E67

FILE NUMBER XXX-X-X

TOTAL SHEETS XXX

DATE/TIME: 1/18/2012 3:34:12 PM USER: gstephenson
FILE NAME: s:\FFL\WOSCADD\55519_Portsmouth_R11_Memorial_Bridge\E1\Plans\13678F-E26_WarnGt.dgn
MODEL NAME: Plan 1
LAST SAVE: 1/18/2012 3:24:42 PM

GATE GENERAL NOTES:

FOR NOTES, SEE WARNING GATE DETAILS, SHEET E26.

GATE SPECIFICATIONS (ALL GATES):

FOR GENERAL GATE SPECIFICATIONS, SEE WARNING GATE DETAILS, SHEET E26.

GATE SPECIFICATIONS (BARRIER GATES ONLY):

THE FOLLOWING SPECIFICATIONS APPLY ONLY TO BARRIER GATES:

MODEL	MODEL VR-7, AS MANUFACTURED BY B&B ROADWAY, LLC (PHONE: 888-560-2060), OR APPROVED EQUAL
GATE ARM	CARBON STEEL RECTANGULAR TUBES, HOT-DIP GALVANIZED, PAINTED ALUMINUM
GATE ARM BASE	DOUBLE RAIL ALUMINUM TUBE WITH ABSORBTION CABLES INSIDE EACH TUBE, QUANTITY AS REQUIRED BY MANUFACTURER
IMPACT DESIGN	CERTIFIED AS CAPABLE OF ABSORBING THE ENERGY OF A 5,000 POUND VEHICLE TRAVELING 50 MPH WHILE PREVENTING VEHICLE FROM TRAVELING PAST THE GATES
ENERGY ABSORBTION	6X25 CONSTRUCTION CABLES, 300-SERIES STAINLESS STEEL, ANNEALED ENERGY ABSORPTION CABLES TO ASSIST IN DIFFUSING THE KINETIC ENERGY OF AN IMPACTING VEHICLE
LOCKBAR	HEAVY-DUTY SIDE ARM LATCH, ENGAGED TO SHAFT THROUGH SIDE ARM TUBES
INTERCONNECTION	NON-POWERED CONNECTION WITH YOKE ON THE OFF-GOING TRAFFIC BARRIER FITTING OVER THE ANCHOR NUT IN THE ONCOMING GATE WHEN CLOSED.
OPERATION TIME	16 SECONDS OR FASTER (EITHER RAISE OR LOWER)

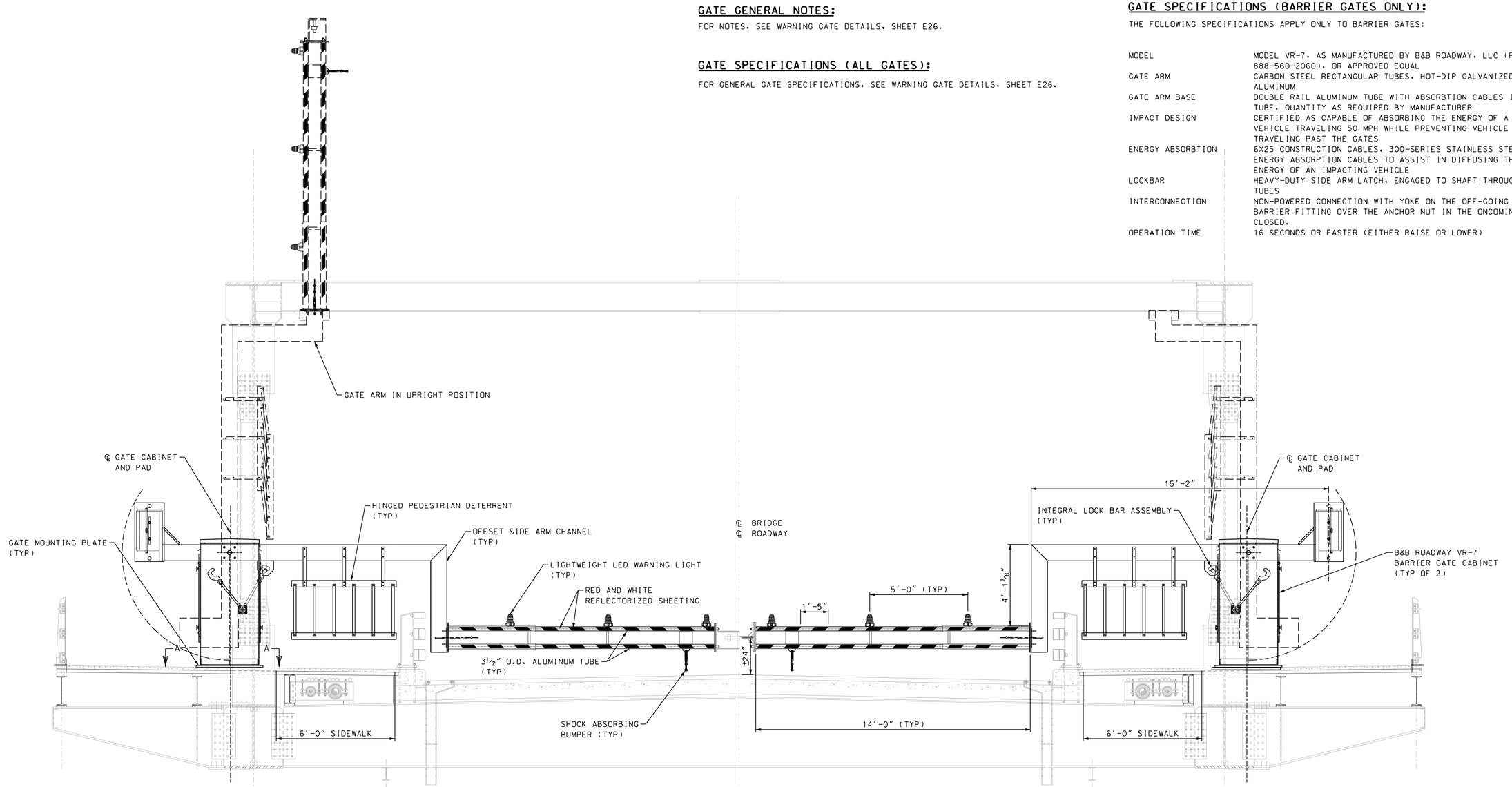

SOUTH BARRIER GATE (LOOKING NORTH)

SCALE: 3/8" = 1'-0"

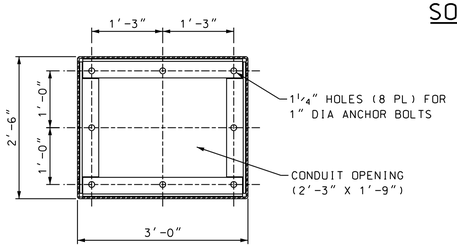

SECTION A-A

SCALE: 3/4" = 1'-0"

80% SUBMISSION
JANUARY 18, 2012

ARCHER WESTERN CONTRACTORS

HNTB
HNTB Corporation
The HNTB Companies
Engineers Architects Planners

SUBDIRECTORY	.DGN LOCATOR	SHEET SCALE
Plans	13678F-E27_BarrGt	3/8" = 1'-0"

STATE OF NEW HAMPSHIRE
DEPARTMENT OF TRANSPORTATION * BUREAU OF BRIDGE DESIGN

TOWN PORTSMOUTH, NH - KITTERY, ME BRIDGE NO. 247/084 STATE PROJECT 13678

LOCATION US ROUTE 1 OVER THE PISCATAQUA RIVER

BARRIER GATE DETAILS

BRIDGE SHEET: E27 OF E67

FILE NUMBER: XXX-X-X

REVISIONS AFTER PROPOSAL		BY	DATE		BY	DATE
	DESIGNED	MCG	01/12	CHECKED	GP	01/12
	DRAWN	MDC	01/12	CHECKED	DR	01/12
	QUANTITIES	XXX	XX/XX	CHECKED	XXX	XX/XX

ISSUE DATE
REV. DATE

FEDERAL PROJECT NO.: BHF-T-0101(015)

SHEET NO.: XXX

TOTAL SHEETS: XXX

DATE/TIME:1/18/2012 3:34:13 PM USER:gstephenson
FILE NAME:s:\FFL\WOCADD\55519_Portsmouth_Rt1_Memorial_Bridge\E1\Plans\13678F-E27_BarrGt.dgn
MODEL NAME:BARRIER GATE DETAILS
LAST SAVE:1/18/2012 1:20:14 PM

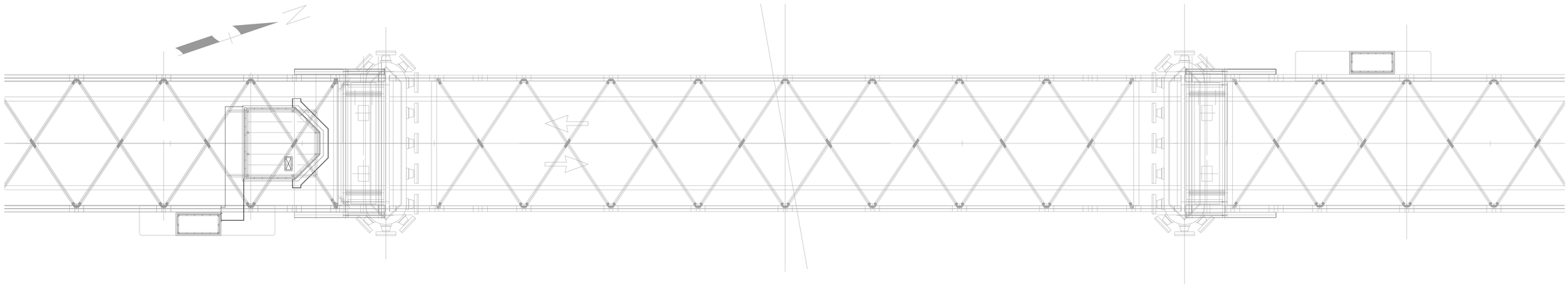

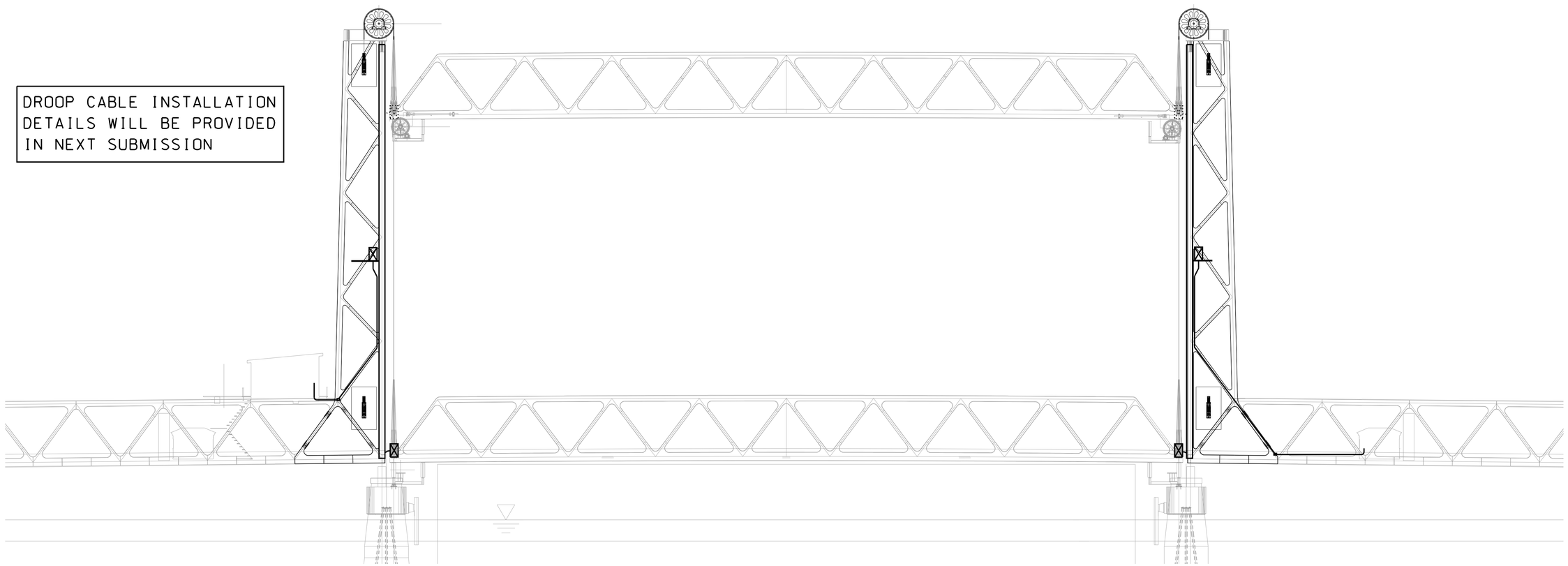

DROOP CABLE INSTALLATION DETAILS WILL BE PROVIDED IN NEXT SUBMISSION

80% SUBMISSION
JANUARY 18, 2012

ARCHER WESTERN CONTRACTORS

HNTB
HNTB Corporation
The HNTB Companies
Engineers Architects Planners

SUBDIRECTORY	.DGN LOCATOR	SHEET SCALE
Plans	13678F-E28_Droop	1" = 20'-0"

STATE OF NEW HAMPSHIRE
DEPARTMENT OF TRANSPORTATION * BUREAU OF BRIDGE DESIGN

TOWN PORTSMOUTH, NH - KITTERY, ME BRIDGE NO. 247/084 STATE PROJECT 13678

LOCATION US ROUTE 1 OVER THE PISCATAQUA RIVER

DROOP CABLE INSTALLATION DETAILS 1

REVISIONS AFTER PROPOSAL		BY	DATE		BY	DATE
	DESIGNED	MCG	01/12	CHECKED	GP	01/12
	DRAWN	MDC	01/12	CHECKED	DR	01/12
	QUANTITIES	XXX	XX/XX	CHECKED	XXX	XX/XX
	ISSUE DATE			FEDERAL PROJECT NO.	SHEET NO.	
	REV. DATE			BHF-T-0101(015)	XXX	

BRIDGE SHEET E28 OF E67

FILE NUMBER XXX-X-X

TOTAL SHEETS XXX

DATE/TIME: 1/18/2012 3:34:14 PM USER: gstephenson
FILE NAME: s:\FFLw00\CADD\55519_Portsmouth_Rt1_Memorial_Bridge\Plans\13678F-E28_Droop.dgn
MODEL NAME: Plan
LAST SAVE: 1/17/2012 2:16:11 PM

CABLE SPECIFICATIONS

DESIGNATION	PURPOSE	MANUFACTURER	SERIES	DESCRIPTION	SPECIFICATION
TYPE 5E	CATEGORY 5E CABLE			WHERE USED	ETHERNET NETWORK AND TELEPHONE DISTRIBUTION CABLE
				CONDUCTOR	4 PAIR UNSHIELDED TWISTED PAIR CABLE, 24 AWG SOLID BARE COPPER
				INSULATION/JACKET	POLYOLEFIN INSULATED SINGLES, RIPCORD AND FLEXIBLE PVC JACKET
				RATING	MEETS IEEE 802.3 STANDARD UV-RESISTANT, OIL RESISTANT, WATER-RESISTANT
TYPE AS	MULTI-CONDUCTOR ARMORED SERVICE CABLE			WHERE USED	WHERE NOTED ON PLANS
				REFERENCE	ICEA S-66-524, SECTION 4.5.7 AND UL 1569.
				CONDUCTOR	BARE, COPPER, PER ASTM B-3, CLASS B STRANDING PER ASTM B-8.
				INSULATION	X-OLENE PER ICEA S-66-524 AND UL 44. LISTED UL TYPE XHHW-2.
				CONDUCTOR IDENTIFICATION	BASE COLORS AND TRACERS PER ICEA S-73-532. SIZES 4 AWG & LARGER - PRINT NUMBER AND COLOR.
				JACKET	BLACK OKOSEAL (PVC) PER UL 1569.
				UL LISTING	XHHW-2
				ASSEMBLY	PER UL 1569 WITH BINDER TAPE OVERALL.
				SHEATH	CLOSE FITTING, IMPERVIOUS, CONTINUOUS, WELDED, CORRUGATED ALUMINUM C-L-X PER UL 1569. EXCEEDS GROUNDING CONDUCTOR REQUIREMENTS OF NEC TABLE 250-95.
TYPE CX	COAXIAL CABLE			WHERE USED	
				TYPE	RGU6 COAXIAL CABLE
				JACKET	POLYVINYL CHLORIDE
				SHIELD	ALUMINUM FOIL SHIELD
				CONDUCTOR	#18 AWG SOLID COPPER COVERED STEEL
TYPE F	MULTIMODE FIBER-OPTIC CABLE	OPTICAL CABLE CORPORATION	B012-125C-W3EB/1UC/900-MIL (12-FIBER)	WHERE USED	GENERAL FIBER DISTRIBUTION CABLE
				FIBER TYPE	62.5 UM, MULTI MODE, 850NM
				CONSTRUCTION	
				RATING	
				FIBERS	12 FIBER OR 24 FIBER CABLE, AS SHOWN ON BLOCK DIAGRAMS
TYPE FF	EXTRA-FLEXIBLE MULTIMODE FIBER - OPTIC CABLE	OPTICAL CABLE CORPORATION	D12-070C-WST-900-MIL (12-FIBER)	WHERE USED	DROOP CABLES AND OTHER LOCATIONS WHERE CABLE WILL BE REPEATEDLY MOVED AS A RESULT OF OPERATION OR SHOWN ON PLANS
				FIBER TYPE	62.5 UM, MULTI MODE, 850NM, MILITARY TACTICAL DISTRIBUTION CABLE
				CONSTRUCTION	
				RATING	
				FIBERS	12 FIBER OR 24 FIBER CABLE, AS SHOWN ON BLOCK DIAGRAMS
TYPE G	BARE COPPER GROUND WIRE			WHERE USED	GROUND CABLES. DO NOT USE IN LIGHTNING PROTECTION SYSTEM.
				CONDUCTOR	CLASS B STRANDING, TINNED COPPER
				CONSTRUCTION	
				CONDUCTOR:	CONFORMING TO ASTM B-3 FOR SOFT OR ANNEALED COPPER WIRE CONFORMING TO ASTM B-8 FOR CONCENTRIC-LAY STRANDED COPPER CONFORMING TO FEDERAL STANDARD QQ-W-343
				INSULATION:	NONE (EXCEPT IF IN CONTACT WITH ALUMINUM; THEN THE GROUNDING WIRE SHALL HAVE A GREEN PVC JACKET.
TYPE PM	MULTICONDUCTOR CONTROL POWER AND CONTROL CABLE	OKONITE	FMR OKOSEAL 210	WHERE USED	120 VOLT AND LOW VOLTAGE CONTROL CABLES POWER DISTRIBUTION TO BRIDGE AND FIELD DEVICES SHOWN ON ONE-LINE DIAGRAM (CABLES #1/0 AND SMALLER) WHERE REQUIRED BY NEC FOR USE IN CABLE TRAYS
				CONDUCTOR	TIN COATED COPPER PER ASTM B-33, CLASS B STRANDED PER ASTM B-8.
				GROUNDING CONDUCTOR	WHERE INDICATED, BARE STRANDED COPPER PER ASTM B-8, CLASS B, AND NEC TABLE 250-95. CROSS-SECTIONAL AREA EQUAL TO OR GREATER THAN THAT SHOWN.
				INSULATION	OKONITE-FMR MEETS OR EXCEEDS REQUIREMENTS OF UL 1581 AND ICEA S-95-658 NEMA/WC70 TYPE II INSULATION.
				OVERALL JACKET	COMPLIES WITH UL 1277. THE OKOSEAL COMPOUND MEETS OR EXCEEDS THE REQUIREMENTS OF UL 1581. UL LISTED AS TYPE TC CABLE WITH A SUNLIGHT RESISTANT JACKET AND FOR DIRECT BURIAL.
				ASSEMBLY	CONDUCTORS CABLED IN ACCORDANCE WITH UL 1277 USING FILLERS, AS NECESSARY, WITH A CABLE TAPE OVERALL.
				COLOR CODING	BASE COLORS AND TRACERS AS SHOWN ON REVERSE OF DATA SHEET OR BLACK CONDUCTORS WITH SURFACE PRINTING OF NUMBERS PER ICEA 73-532 NEMA/WC57 METHOD 4.
TYPE PS	SINGLE CONDUCTOR POWER CABLE			WHERE USED	POWER DISTRIBUTION CABLES IN CONDUIT (CABLES LARGER THAN #1/0) GENERAL LIGHTING AND HEATING POWER DISTRIBUTION
				REFERENCE	ICEA S-66-524
				CONDUCTOR	CLASS B STRANDING, 90 DEGREES C, STANDARD ROUND UNCOATED COPPER
				INSULATION	FLAME RESISTANT THERMOSETTING CHEMICALLY CROSS LINKED POLYETHYLENE
				JACKET	NONE
				UL LISTING	XHHW-2
				RATING	TRAY-RATED (#1/0 AWG AND LARGER) SERVICE-ENTRANCE RATED (WHERE REQUIRED)
				TESTS	FLAME TEST REQUIREMENTS PER IEEE 383, USING A GAS BURNER FLAME SOURCE.
TYPE SOOW	MULTI-CONDUCTOR WEATHER CABLE	BIW	ALL-TEMP INDUSTRITE TYPE SOW-A	WHERE USED	FENDER NAVIGATION LIGHTING CIRCUITS OTHER LOCATIONS AS SHOWN ON PLANS
				REFERENCE	ICEA S-68-516, UL-62
				CONDUCTOR	BARE, ANNEALED COPPER PER ASTM B-3. FLEXIBLE, BUNCH-STRANDED PER UL-62.
				CONSTRUCTION	WATER AND OIL RESISTANT
				INSULATION	COLOR CODED SYNTHETIC OIL, OZONE AND WATER RESISTANT RUBBER (EPDM) UL-62
				JACKET	OIL RESISTANT THERMOSET, CPE (BLACK OR YELLOW) UL-62
				UL LISTING	FILE NO. E7362
				TESTS	ASTM D-470, ASTM D-2240, ASTM D-573, ASTM D- 471, UL1581, CSA C22.2 NO 0.3, ASTM D-2863, ASTM D-573, MSHA
				SUPPORT	CABLE MUST BE ABLE TO SUPPORT ITS OWN WEIGHT OVER THE LENGTHS REQUIRED.

POWER SYSTEM EQUIPMENT SPECIFICATIONS

DEVICE	QUANTITY	FUNCTION / TITLE	MANUFACTURER	SERIES	DESCRIPTION	SPECIFICATION
MCC	4	MACHINERY HOUSES AND GATE HOUSES	ALLEN BRADLEY	2100		SEE SHEET E55 FOR SPECIFICATIONS
PANELBOARDS / SWITCHBOARDS	5	INTEGRAL TO MCCs / CONTROL HOUSE				SECTION 816, SCHEDULES
LOADCENTER	1	GENERATOR HOUSE				SECTION 813
TRANSFORMERS	4	MACHINERY HOUSES AND GATE HOUSES				SECTION 816
GENERATOR	1	GENERATOR HOUSE				SECTION 813
ATS	1	GENERATOR HOUSE				SECTION 813
LOADBANK	1	GENERATOR HOUSE				SECTION 813
GENERATOR ENCLOSURE	1	GENERATOR HOUSE				SECTION 813
CAM-LOCK ENCLOSURE	1	GENERATOR HOUSE				SECTION 813

BRIDGE CONTROL SYSTEM DEVICE SPECIFICATIONS

DEVICE	QUANTITY	FUNCTION / TITLE	MANUFACTURER	SERIES	DESCRIPTION	SPECIFICATION
FIBER PATCH PANELS	AS SHOWN ON BLOCK DIAGRAMS	FIBER PATCH PANELS			CONSTRUCTION	NEMA 4X, STAINLESS STEEL
					CONNECTORS	SINGLE SC LOSS LESS .5DB PER MATED PAIR
					CAPACITY	2*(12 FIBER CABLES) IN, 2*(12 FIBER CABLES) OUT
					TESTING	
UPS	AS SHOWN ON PLANS	ALL PLC'S ALL FIBER SWITCHES OR ROUTERS			PURPOSE	MAINTENANCE OF POWER TO COMMUNICATION SWITCHES AND PLC NETWORK
					GENERAL	SUPPLY 125% LOAD FOR 15 MINUTES AFTER INPUT POWER LOSS.
					FORM C OUTPUTS	UTILITY POWER FAILURE BATTERY DISCHARGED AND/OR BATTERY FAILURE
PLC		PLC PROCESSOR	ROCKEWLL AUTOMATION	CONTROL LOGIX 1756		EXPANSION CAPACITY25%
PLC I/O		PLC REMOTE INPUT/OUTPUT	ROCKEWLL AUTOMATION	FLEX 1794	I/O CARDS	FORM C INPUT/OUTPUT RESOLVER INPUT EXPANSION CAPACITY 25%
MOTOR STARTERS	AS REQUIRED	MOTOR CONTROL	ALLEN BRADLEY	520E-CO 509-TO 505-TO	PURPOSE	MOTOR CONTROLS NOT LOCATED IN MOTOR CONTROL CENTERS
					RATING	3 POLE, 480 V,
					FEATURES	EQUIPPED WITH EUTECTIC OVERLOADS AND AUTO RESET.
					GENERAL	FULL VOLTAGE, MAGNETIC COMBINATION TYPE INTEGRATED ASSEMBLY INCLKUDING CONTACTORS AND OVERLOAD DEVICES
CONTROL RELAYS	AS REQUIRED	MACHINE TOOL RELAYS	SQUARE D	TYPE X CLASS 8501	PURPOSE	RELAYS WITH MORE CONTACTS REQUIRED THAN A CONTROL RELAY CAN PROVIDE (E-STOP, ETC.)
					SWITCH CONTACTS	
					MOUNTING	
		CONTROL RELAYS	ALLEN BRADLEY	HB	SWITCH CONTACTS	10 AMPS AT 120 VOLTS, 3 PDT (3 FORM C)
					BASE TYPE	
		TIMING RELAY	ALLEN BRADLEY	HS	SWITCH CONTACTS	12 AMPS AT 120 VOLTS, DPDT (2 FORM C)
					BASE TYPE	
					TIME RANGE	ADJUSTABLE FROM 0.1 TO 10 SECONDS OR 1 SECOND TO 180 SECONDS (DEPENDING ON FUNCTION)
		MAGNETIC LATCHING	ALLEN BRADLEY	HJ	SWITCH CONTACTS	10 AMPS AT 120 VOLTS, DPDT (2 FORM C)
					BASE TYPE	
INDICATOR (PILOT) LIGHTS	AS REQUIRED	GENERAL			VOLTAGE	120 VOLTS AC, LED
					POWER SOURCE	CONTROL CIRCUITS
					LEGENDS	ENGRAVED AS SHOWN ON PLANS, VISIBLE WITH LIGHT ON OR OFF
					PARTIAL ILLUMINATION	CARE SHALL BE TAKEN TO ENSURE LAMPS ARE NOT PARTIALLY ILLUMINATED DUE TO INDUCTIVE/LEAKAGE CURRENTS OR STRAY VOLTAGES.
		PUSH BUTTONS				
		KEY SWITCHES				
PHOTOCELL	1	PHOTOCELL	AREA LIGHTING, INC.		PURPOSE	AUTOMATICALLY ACTUATE THE NAVIGATION, AVIATION, AND ROADWAY LIGHTING
					RATING	
					FAILURE STATE	FAILS SUCH THAT PHOTOCELL IS ON
					MOUNTING LOCATION	NORTH SIDE OF CONTROL HOUSE OR BUILDING, MOUNTED IN A LOCATION AWAY FROM ARTIFICIAL LIGHT, UNLESS OTHERWISE NOTED.
PHASE REVERSAL RELAY	1	UNDER VOLTAGE, PHASE LOSS, PHASE REVERSAL	TIME-MARK	A269	VOLTAGE RANGE	430-520 VOLTS
					TRIP DELAY	5 SEC
CONTROL KEY INDICATING LIGHTS	AS REQUIRED	PANEL INDICATOR LIGHTS				
CONTROL KEY SWITCH	AS REQUIRED	CONTROL PANEL KEY SWITCH				
PRINTER	1	CONTROL SYSTEM REPORT PRINTER	HP	1020		LASER PRINTER
TOUCHSCREEN	2	CONTROL CONSOLE			DISPLAY	17 IN SCGA (1280X1024 COLOR FLAT PANEL ANALOG RESISTIVE TOUCHSCREEN VESA MOUNT
					PROCESSOR	2.0GHZ
					HARD DRDIVE	500GB, SATA
					OPERATING SYSTEM	WINDOWS 7
					USB	6 PORTS
					ETHERNET	RJ45 10/100 MBS
					WARRANTY	1 YEAR
					EXPANSION	1 PCI, 1 PCIX
					POWER	120-240 VAC, 500 WATT
					FCC	47CFR, PART 15, CLASS A
					UL	UL508
POWER MONITOR	1	CONTROL ROOM	ELECTRO INDUSTRIES / GAUGE TECH	SHARK 100T	PURPOSE	PROVIDE POWER MONITORING FOR ENTIRE ELECTRICAL SYSTEM
					RATINGS	3 PHASE, ACCEPTING UNIVERSAL VOLTAGE INPUT
					ITEMS MEASURED AND REPORTED	LINE CURRENT (AMPS) - PHASE A, PHASE B, PHASE C LINE (VOLTS) - PHASE A, PHASE B, PHASE C POWER FACTOR REAL POWER (WATTS) REACTIVE POWER (VAR)
					DISPLAY INTERFACE	PANEL-MOUNTED ON FRONT OF SWITCHBOARD OR MCC, USER-CONFIGRABLE THROUGH INTERFACE
					ACCURACY	1% OR BETTER ACCURACY, TRUE RMS
					FAULT CURRENT	
					CERTIFICATION	UL LISTED CE MARKED
					UPGRADE PACKS	VOLTS, AMPS, TRANSDUCER DEFAULT VOLTS, AMPS KW, KVAR, PF, KVA, FREQ VOLTS, AMPS, KW, KVAR, PF, KVA, FREQ, KWH, KVARH, DNP 3.0 VOLTS AMPS KW KVAR PF KVA FREQ KWH KVAH KVARH %THD LIMIT EXCEDED ALARMS AND DNP 3.0
ETHERNET SWITCH	AS REQUIRED					
TERMINAL BLOCKS						

NOTES:

1. MODEL NUMBERS LISTED MAY NOT BE COMPLETE. PROVIDE CATALOG CUTS FOR ALL EQUIPMENT
2. ALL EQUIPMENT MANUFACTURERS SHALL HAVE AT LEAST 10 YEARS EXPERIENCE IN PRODUCTION OF THE TYPE OF COMPONENT SPECIFIED.
3. COORDINATE SIZES OF MACHINERY AND ELECTRICAL COMPONENTS, SUCH AS SHAFT SIZES, COUPLINGS, WIRE TERIMINALS, AS REQUIRED TO ENSURE A COMPLETELY FUNCTIONING SYSTEM THAT FITS WITHIN THE SPACE REQUIREMENTS SHOWN.

80% SUBMISSION
JANUARY 18, 2012

ARCHER WESTERN CONTRACTORS

HNTB
HNTB Corporation
The HNTB Companies
Engineers Architects Planners

SUBDIRECTORY	.DGN LOCATOR	SHEET SCALE
Plans	13678F-E31-32_Eq_Sch	NONE

STATE OF NEW HAMPSHIRE
DEPARTMENT OF TRANSPORTATION * BUREAU OF BRIDGE DESIGN

TOWN PORTSMOUTH, NH - KITTERY, ME BRIDGE NO. 247/084 STATE PROJECT 13678
LOCATION US ROUTE 1 OVER THE PISCATAQUA RIVER

EQUIPMENT LEGEND AND SCHEDULES 1

REVISIONS AFTER PROPOSAL

	BY	DATE		BY	DATE
DESIGNED	MCG	1/12	CHECKED	GP	1/12
DRAWN	MDC	1/12	CHECKED	DR	1/12
QUANTITIES	XXX	XX/XX	CHECKED	XXX	XX/XX

ISSUE DATE
REV. DATE
FEDERAL PROJECT NO. BHF-T-0101(015)
SHEET NO. XXX
TOTAL SHEETS XXX
BRIDGE SHEET E31 OF E67
FILE NUMBER XXX-X-X

DRAFT

DATE/TIME:1/18/2012 4:49:00 PM USER:gstephenson
FILE NAME:U:\55519_Portsmouth_R#1_Memorial_Bridge\E1\Plans\13678F-E31-32_Eq_Sch.dgn
MODEL NAME:SCHEDULE_1
LAST SAVE:1/18/2012 4:36:33 PM

ELECTRICAL MACHINERY SPECIFICATIONS

DEVICE	QUANTITY	FUNCTION / TITLE	MANUFACTURER	SERIES	DESCRIPTION	SPECIFICATION
WARNING GATES	4					SEE SHEET E26 FOR SPECIFICATIONS
BARRIER GATES	4					SEE SHEET E27 FOR SPECIFICATIONS
MAIN MOTOR DRIVE CONTROLLERS	3	MAIN MOTOR DRIVE	ALLEN-BRADLEY	POWERFLEX 750	GENERAL	SOLID STATE, 3 PHASE, AC FLUX VECTOR CONTROL ZERO SPEED HOLDING TORQUE 200% TORQUE AT 150% CURRENT LOCAL INTERFACE AND DIAGNOSTIC MODULE EXTERNAL SPEED REFERENCE DYNAMIC BRAKE MODULES WITH RESISTOR BANKS NO REGENERATIVE BRAKING LOAD SHARING CAPABLE (BOTH DRIVES SAME TORQUE) CURRENT (TORQUE) LIMIT ADJUSTMENT, SET ATO 150% RATED MOTOR CURRENT ENCLOSURE MOUNTED DISCONNECT SWITCH ETHERNET CONTROL INTERFACE TO PLC RELAY CLOSURE INPUT FOR EMERGENCY STOP
					RESET	SOFT FAULTS VIA PLC INPUT LOCAL HARD FAULT RESET VAIL DRIVE PANEL
					PROTECTIONS	PHASE LOSS CURRENT LIMIT EMERGENCY STOP
					CONTROL INPUTS	EMERGENCY STOP, MOTOR DIRECTION (RAISE/LOWER), MOTOR SPEED (REDUCED/FULL/CREEP), MOTOR ACCEL, MOTOR TORQUE LIMIT, MOTOR CURRENT LIMIT, SOFT RESET, DRIVE ON/OFF (MOTOR HOLD ON/OFF), REDUCED TORQUE, DRIVE RESET
					CONTROL OUTPUTS	DRIVE FAULT AND STATUS, MOTOR SPEED, MOTOR POSITION, MOTOR TORQUE MOTOR CURRENT, MOTOR VOLTAGE, DRIVE INPUT CURRENT, DRIVE INPUT VOLTAGE, PROOF OF TORQUE
					CABINET INDICATORS	READY, FAILURE, MOTOR SPEED (RPM), CURRENT (AMPS), TORQUE (% FULL LOAD)
					CORROSION PROTECTION	CONFORMAL COATING ON ALL CIRCUIT BOARDS
					NAMEPLATE	(SPAN DRIVE A) (SPAN DRIVE B)
					BRAKING	DYNAMIC ONLY
					ENCLOSURE	NEMA 12, GASKETED, SHOCK AND VIBRATION RESISTANT BASES, AND SPACE HEATERS
MOTORS	AS REQUIRED	GENERAL REQUIREMENTS FOR ALL MOTORS			PURPOSE	GENERAL REQUIREMENTS OF ALL MOTORS PROVIDED, UNLESS OTHERWISE NOTED.
					STANDARDS	BUILT IN ACCORDANCE WITH NEMA STANDARDS
					COATING	MOISTURE PROOF CORROSION-RESISTANT POLYESTER PAINT OR COATING ON EXPOSED METAL SURFACES. UNCOATED SURFACES SHALL BE HDEAVY-DUTY NON-CORROSIVE MATERIAL.
					ROTORS	BALANCED MECHANICALLY AND ELECTRICALLY.
					WINDINGS	PROVIDED WITH SPECIAL INSULATION TO RETARD DECREASE IN RESISTANCE DUE TO MOISTURE.
					INSULATION	CLASS F, WITH ANTI-FUNGAL TREATMENT UNLESS OTHERWISE NOTED
					RATINGS	480 VOLT, 3-PHASE, 60 HZ, TENV, 30-MINUTE RATED, SQUIRREL CAGE INDUCTION MOTOR (1/2 HP OR LARGER) AS SPECIFIED (LESS THAN 1/2 HP)
					PART OF ASSEMBLY	WHERE MOTORS ARE SUPPLIED AS AN INTEGRAL PART OF ANOTHER ITEM, THE MOTORS SHALL BE OF A NEMA DESIGN AND HORSEPOWER AND SPEED COMPATIBLE WITH THAT ITEM
MAIN MOTOR	3	MAIN DRIVE MOTORS			MAIN DRIVE	125 HP, 900 RPM, 480V, 3 PHASE, 60 HZ
					ALTERNATE SPECIFICATION	IT WILL BE PERMISSIBLE TO PROVIDE A MOTOR BASED ON A 1200 OR 1800 RPM, 60 HZ DESIGN, PROVIDED FULL-LOAD TORQUE AT 900 RPM (SUPPLIED AT REDUCED FREQUENCY) IS NO LESS THAN FULL-LOAD TORQUE FOR A 900 RPM MOTOR. NAMEPLATE SHALL REFLECT SUCH CONDITIONS. ALTERNATE MOTOR DESIGNS TO BE SUBMITTED FOR REVIEW AND APPROVAL AT ENGINEER'S DISCRETION. IF APPROVED, CONTRACTOR SHALL TAKE RESPONSIBILITY FOR REVISION OF MOUNTING DETAILS AND OTHER REVISIONS TO DRIVES, MATERIAL AND WORK.
					RATING	CONTINUOUS, EXTRA SEVERE DUTY, INVERTER DUTY RATED FOR FLUX VECTOR APPLICATION
					SPACE HEATER	115V SPACE HEATER
					SERVICE FACTOR	1.0
					DUTY	30 MIN
					HOUSING	TENV
					FRAME	405TC
					INSULATION	CLASS F1
					TEMPERATURE	40C
					SHAFT	DOUBLE ENDED SHAFT. THE EXTENDED SHAFT LENGTH OF THE SPAN DRIVE MOTOR SHALL BE OF SUFFICIENT LENGTH TO PERMIT COUPLING OF INCREMENTAL ENCODER TO THE MOTOR SHAFT WITHOUT INTERFERENCE WITH THE MOTOR BRAKE ASSEMBLY AND BRAKE WHEEL.
					TERMINALS	AS APPROVED, AND AS REQUIRED TO ACCOMMODATE POWER AND CONTROL CABLES
					ENCODER	INCLUDED AND INTEGRAL. AS RECOMMENDED BY DRIVE MANUFACTURER.
					ENCODER SUPPORT	CONSTRUCTED IN A MANNER SIMILAR TO THE MAIN MACHINERY SUPPORT. SUBMIT FOR REVIEW AND APPROVAL.
					SUBMITTAL REQUIREMENTS	SPAN DRIVE MOTOR, MOTOR BRAKE, AND INCREMENTAL ENCODER WITH APPROPRIATE MACHINERY SUPPORTS AS A COMPLETED ASSEMBLY
					INSTALLED BY	MACHINERY CONTRACTOR
					COUPLINGS	FLEXIBLE COUPLINGS FOR THE MAIN DRIVE MOTORS ARE TO BE FURNISHED AS PART OF THE MECHANICAL PROVISIONS. THE COUPLING HALVES AT THE MOTORS SHALL BE SHIPPED TO THE MOTOR SUPPLIER AND SHALL BE FITTED AND INSTALLED ON THE MOTOR SHAFTS AS PART OF THE BRIDGE CONTROL SYSTEM WORK.
AUXILIARY MOTOR	1	AUXILLARY DRIVE MOTOR	REULAND ELECTRIC		PURPOSE	EMERGENCY OPERATION OF BRIDGE IF MAIN MOTORS OR SYSTEM FAIL
					GENERAL	50 HP, 480V, 1200/600 RPM, 3 PHASE, 60 HZ, 2-SPEED, INDUCTION
					INSULATION	CLASS H, COATED AGAINST MOISTURE
					SERVICE FACTOR	1.15
					HOUSING	NEMA H, TENV
					SHAFT	STANDARD LENGTH
					TERMINALS	AS APPROVED, AND AS REQUIRED TO ACCOMMODATE POWER AND CONTROL CABLES
					FRAME	404T
					INSTALLED BY	MACHINERY CONTRACTOR
					SPACE HEATER	85W, 120VAC

DRAFT

ELECTRICAL MACHINERY SPECIFICATIONS - CONTINUED

DEVICE	QUANTITY	FUNCTION / TITLE	MANUFACTURER	SERIES	DESCRIPTION	SPECIFICATION
MOTOR AND MACHINERY BRAKES	2 MOTOR BRAKES 2 MACHINERY BRAKES				PURPOSE	PREVENT UNWANTED MOVEMENT OF BRIDGE DRIVE MACHINERY
					TYPE	ELECTRICALLY OPERATED DRUM THRUSTER BRAKES
					BRAKE ACTUATION	SPRING SET, THRUSER-RELEASED, SHOE TYPE
					CONSTRUCTION TYPE	OPEN
					HAND RELEASE	PROVIDED
					BRAKE WHEEL	INCLUDED
					LIMIT SWITCHES	BRAKE SET, BRAKE RELEASED, HAND RELEASE
					LABELS	HAND BRAKE RELEASED, HAND BRAKE SET, BRAKE DESIGNATION
					ENCLOSURE	CONFORM TO AASHTO AND OSHA 3 PIECE SPLIT, REMOVAL BY 1 PERSON FOR MAINTENANCE 12 GUAGE GALVANIZED SHEET METAL CORROSION RESISTANT HINGES AND DRAW LATCHES JOGGLE TYE LAP JOINTS
					SPACE HEATER	
					CLEARANCES	THE CONTRACTOR SHALL COORDINATE, VERIFY, AND INCORPORATE PROPER CLEARANCE BETWEEN THE ENCLOSURE, BRAKE ASSEMBLY AND ADJACENT MACHINERY COMPONENTS. ALL PIECES OF THE GUARD ASSEMBLY SHALL BE EASILY REMOVABLE AND REPLACEABLE AS REQUIRED FOR MAINTENANCE PURPOSES.
					BRAKE MOTOR	CONTINUOUS RATED
					MOTOR BRAKE HOLDING TORQUE	
					MACHINERY BRAKE HOLDING TORQUE	
					COUPLINGS	
CLUTCH	1	AUXILLARY DRIVE CLUTCH			GENERAL	AASHTO ARTICLE 2.5.17 ELECTRO-MAGNETIC SPACE-HEATER
					ENCLOSURE	AASHTO AND OSHA 3 PIECE 12 GAUGE GALVANIZED OAE CORROSION RESISTANT HINGES CORROSION RESISTANT JOGGLE LAP LATCHES DUST TIGHT, DRIP PROOF
SPAN LOCK MOTORS	4					
					LIMIT SWITCHES	
CLS	2	ROTARY CAM LIMIT SWITCH/RESOLVER	GEMCO	1908R-416	PURPOSE	SPAN POSITION DETECTION
					NUMBER OF CONTACTS	16 MINIMUM, OR AS REQUIRED TO MEET SCHEMATICS
					SWITCH CONTACTS	10 AMPS AT 120 VOLTS MINIMUM, SPDT
					SWITCH ADJUSTMENT	PRECISION ADJUSTMENT AT ANY ANGULAR POSITION OF CAM SHAFT. NO SPECIAL CAMS REQUIRED FOR ADJUSTMENT BETWEEN 4 DEGREES AND 356 DEGREES.
					ENCLOSURE	NEMA 4X STAINLESS STEEL
					CAMS	INDIVIDUALLY ADJUSTABLE, ADJUSTED AS SHOWN ON PLANS AND AS REQUIRED TO MEET BRIDGE OPERATION CRITERIA
					ADJUSTMENT TOOLS	PROVIDED WITH SWITCH, DELIVERED TO OWNER
					RESOLVER	INTEGRAL TO SWITCH ENCLOSURE
					CAM SHAFT	STAINLESS STEEL, LOCATED IN POSITION TO ALLOW CONNECTION TO MACHINERY AS SHOWN.
					RIGHT ANGLE ADAPTERS	PROVIDED WHERE REQUIRED TO ALLOW MOUNTING AS SHOWN ON PLANS
					GEARBOX	GEAR RATIO TO BE CALCULATED BY CONTRACTOR TO ALLOW A 330-DEGREE MAXIMUM RANGE OF CAM TRAVEL BETWEEN FULLY CLOSED AND MAXIMUM OVERTRAVEL
					COORDINATION	CONTRACTOR SHALL PERFORM BETWEEN MACHINERY AND CONTROL SYSTEM VENDORS TO ENSURE NO MORE THAN 330 DEGREES OF ROTATION WILL BE ALLOWED
					SPEED RANGE	0 TO 500 RPM, EITHER DIRECTION
					ACCURACY	REPEATABILITY WITHIN 1 DEGREE OF ROTATION
					BEARINGS	LIFETIME SEALED BALL-TYPE
					DIMENSIONS	COMPATIBLE WITH MOUNTING ARRANGEMENT AND LOCATIONS SHOWN ON PLANS
FCLS	4	PROXIMITY TYPE LIMIT SWITCH	TOPWORX	GO-SWITCH MODEL 80	PURPOSE	FULLY CLOSED POSITION SENSING
					ENCLOSURE	NEMA 4X STAINLESS STEEL
					CONNECTORS	PRE-WIRED TO ALLOW QUICK REPLACEMENT, AS APPROVED BY ENGINEER
					SWITCH CONTACTS	10 AMPS AT 120 VOLTS, DPDT (2 FORM C)
COUNTERWEIGHT LIMIT SWITCHES	2	LEVER TYPE LIMIT SWITCH	GENERAL ELECTRIC	DS9445H200B	PURPOSE	COUNTERWEIGHT POSITION SENSING
					ENCLOSURE	NEMA 4X WATERTIGHT BRONZE
					SWITCH CONTACTS	10 AMPS AT 120 VOLTS, DPDT (2 FORM C)
					ACTUATOR TYPE	BRONZE LEVER WITH BRONZE ROLLER
POSITION INDICATOR	1	AUXILIARY CONTROL CONSOLE				
TACHOMETER / OVERSPEED SWITCH	1	MOTOR OVERSPEED PROTECTION				
COUPLINGS					FURNISH AND INSTALLATION	FLEXIBLE COUPLINGS FOR THE MAIN DRIVE MOTORS ARE TO BE FURNISHED AS PART OF THE MECHANICAL PROVISIONS. THE COUPLING HALVES AT THE MOTORS SHALL BE SHIPPED TO THE MOTOR SUPPLIER AND SHALL BE FITTED AND INSTALLED ON THE MOTOR SHAFTS AS PART OF THE BRIDGE CONTROL SYSTEM WORK.
		MAIN MOTOR				THE BRAKE WHEELS BETWEEN THE MAIN MOTORS AND THE GEAR BOX ACT AS COUPLINGS BETWEEN THE MOTOR AND THE GEAR BOX. THE COUPLINGS ARE SPECIFIED AS AN ELECTRICAL ITEM, BECAUSE THE BRAKE AND THE MOTOR ARE BOTH ELECTRICAL ITEMS. THE CONTRACTOR SHALL COORDINATE THE COUPLING SIZES, TORQUES, BETWEEN THE MECHANICAL SPECIFICATIONS, MOTOR SHAFT DIAMETER, AND BRAKE WHEEL SPECIFICATIONS
		AUX MOTOR				THE AUXILIARY MOTOR IS MECHANICALLY COUPLED TO THE AUXILIARY GEAR REDUCER. THE CONTRACTOR SHALL COORDINATE THE CLUTCH WITH MECHANICAL REQUIREMENTS, MOTOR SHAFT SIZES, AND GEAR REDUCER SHAFT SIZES.

DRAFT

80% SUBMISSION
JANUARY 18, 2012

ARCHER WESTERN CONTRACTORS

HNTB
HNTB Corporation
The HNTB Companies
Engineers Architects Planners

SUBDIRECTORY	.DGN LOCATOR	SHEET SCALE
Plans	13678F-E31-32_Eq_Sch	NONE

STATE OF NEW HAMPSHIRE
DEPARTMENT OF TRANSPORTATION * BUREAU OF BRIDGE DESIGN

TOWN PORTSMOUTH, NH - KITTERY, ME BRIDGE NO. 247/084 STATE PROJECT 13678
LOCATION US ROUTE 1 OVER THE PISCATAQUA RIVER

EQUIPMENT LEGEND AND SCHEDULES 2

REVISIONS AFTER PROPOSAL	BY	DATE		BY	DATE
DESIGNED	MCG	1/12	CHECKED	GP	1/12
DRAWN	MDC	1/12	CHECKED	DR	1/12
QUANTITIES	XXX	XX/XX	CHECKED	XXX	XX/XX
ISSUE DATE					
REV. DATE					

FEDERAL PROJECT NO. BHF-T-0101(015)
SHEET NO. XXX
TOTAL SHEETS XXX
BRIDGE SHEET E32 OF E67
FILE NUMBER XXX-X-X

DATE/TIME:1/18/2012 4:50:00 PM USER:gstephenson
FILE NAME:U:s55519_Portsmouth_Rt1_Memorial_Bridge&E1&Plans&13678F-E31-32_Eq_Sch.dgn
MODEL NAME:SCHEDULE_2
LAST SAVE:1/18/2012 4:36:33 PM

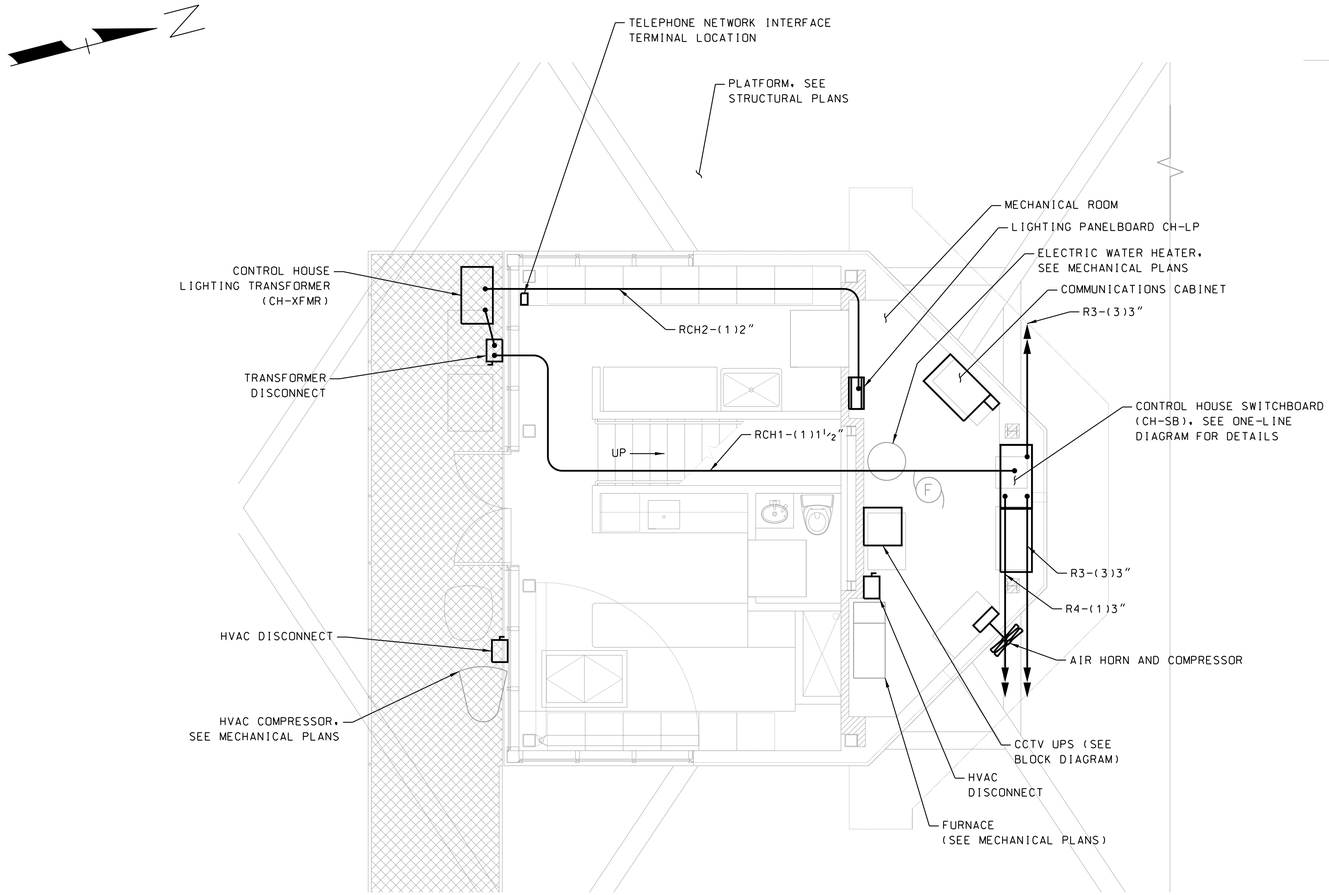

CONTROL HOUSE LOWER LEVEL

SCALE: 1/4"=1'-0"

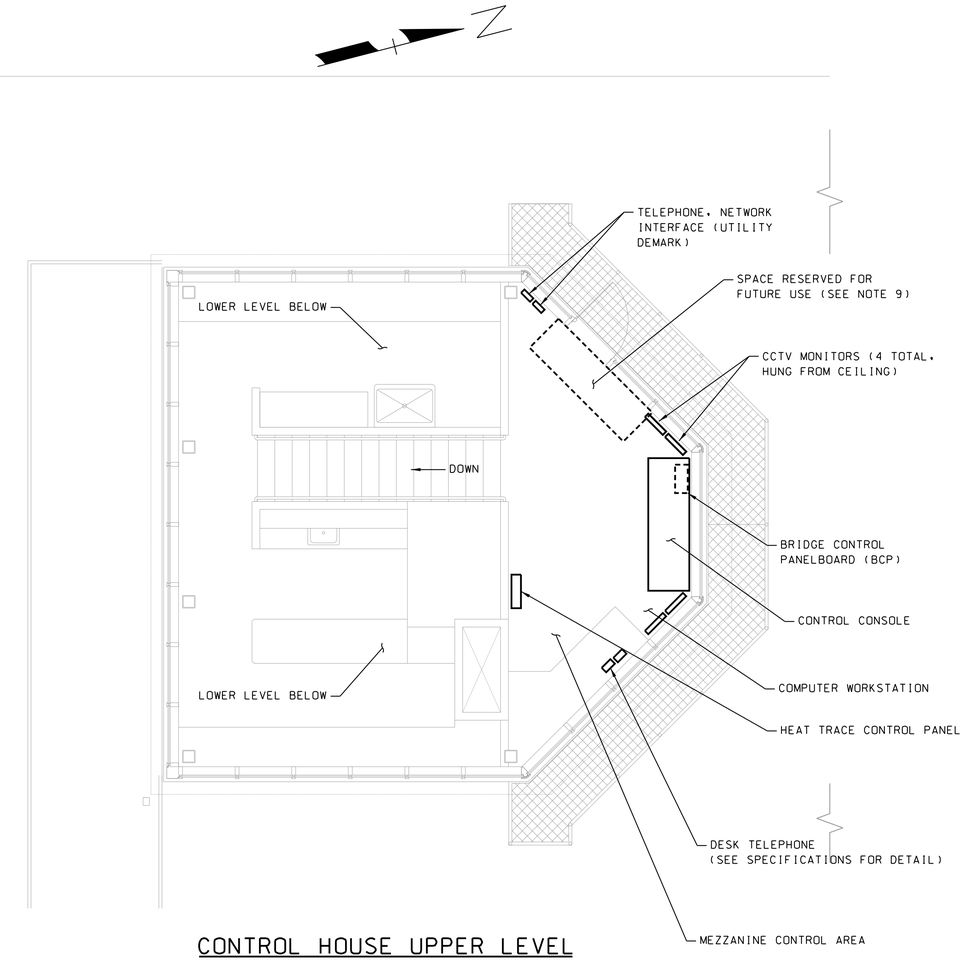

CONTROL HOUSE UPPER LEVEL

SCALE: 1/4"=1'-0"

NOTES:

1. MAXIMUM SPACING OF CONDUIT SUPPORTS SHALL BE 6 FEET ON CENTER.
2. ATTACH UNISTRUT SUPPORT TO CONCRETE WITH SS EPOXY ANCHORS, SIZED PER MANUFACTURER'S RECOMMENDATIONS.
3. ALL EXTERIOR / EXPOSED CONDUIT SHALL BE PVC COATED RIGID GALVANIZED STEEL CONDUIT. ALL CONDUIT INSIDE CONTROL HOUSE SHALL BE GALVANIZED RIGID STEEL (GRS). CONDUIT SHALL BE ROUTED THROUGH CHASES WHICH ARE DETAILED ON THE ARCHITECTURAL PLANS. NOTE THE CONTROL HOUSE HAS A 360 DEGREE VIEW OF WINDOWS.
4. EXTERIOR BUILDING WALLS ARE PANEL TYPE FOR DETAILS SEE ARCHITECTURAL DRAWINGS. WHERE CONDUITS/CABLES PASS THROUGH WALL PANELS, SEAL ALL HOLES WITH APPROVED NON-SHRINK FIRE STOPPING MATERIAL.
5. CONTRACTOR SHALL FURNISH AND INSTALL CONDUIT FITTINGS WHERE NECESSARY TO ENSURE CONDUIT/RACEWAY INSTALLATION ARE COMPLIANT WITH THE NATIONAL ELECTRIC CODE.
6. LIGHTING, INTERCOM, AND FIRE ALARM INSTALLATIONS ARE SHOWN ON LIGHTING PLANS FOR CLARITY. CONTRACTOR SHALL COORDINATE ALL INSTALLATIONS IN THE FIELD TO AVOID CONFLICTS.
7. ALL WIRING RUNNING TO FIELD MOUNTED EQUIPMENT AND THE WIRING TERMINAL CABINETS SHALL BE PROTECTED BY SURGE SUPPRESSORS AND TERMINATED IN THE CABINET ON TERMINAL BLOCKS. TERMINATIONS SHALL BE LABELED AND AS-BUILT TERMINATION DRAWINGS SHALL BE SUBMITTED AT COMPLETION OF PROJECT.
8. SEE STRUCTURAL, ARCHITECTURAL, AND MECHANICAL BRIDGE SHEETS FOR ACTUAL DIMENSIONS AND DETAILS.
9. DO NOT MOUNT ANY WIRING DEVICES OR OTHER EQUIPMENT WITHIN THE SPACE RESERVED FOR FUTURE USE.

LEGEND:

DISCONNECT OR MOLDED CASE CIRCUIT BREAKER

NEW ELECTRICAL EQUIPMENT

80% SUBMISSION
JANUARY 18, 2012

ARCHER WESTERN CONTRACTORS

HNTB
HNTB Corporation
The HNTB Companies
Engineers Architects Planners

SUBDIRECTORY	.DGN LOCATOR	SHEET SCALE
Plans	13678F-E33-38_CH_Eq	1/4"=1'-0"

STATE OF NEW HAMPSHIRE
DEPARTMENT OF TRANSPORTATION * BUREAU OF BRIDGE DESIGN

TOWN PORTSMOUTH, NH - KITTERY, ME BRIDGE NO. 247/084 STATE PROJECT 13678
LOCATION US ROUTE 1 OVER THE PISCATAQUA RIVER

CONTROL HOUSE EQUIPMENT PLAN

REVISIONS AFTER PROPOSAL				BY	DATE		BY	DATE
			DESIGNED	MCG	01/12	CHECKED	GP	01/12
			DRAWN	GS	01/12	CHECKED	DR	01/12
			QUANTITIES	XXX	XXX	CHECKED	XXX	XXX

ISSUE DATE	FEDERAL PROJECT NO.	SHEET NO.
REV. DATE	BHF-T-0101(015)	

BRIDGE SHEET E33 OF E67
FILE NUMBER XXX-X-X
TOTAL SHEETS XXX

DATE/TIME:1/18/2012 4:21:33 PM USER:gstephenson
FILE NAME:U:s55519_Portsmouth_Rt1_Memorial_Bridge&I&Plans&13678F-E33-38_CH_Eq.dgn
MODEL NAME:CH_Elec_Equip
LAST SAVE:1/17/2012 1:25:02 PM

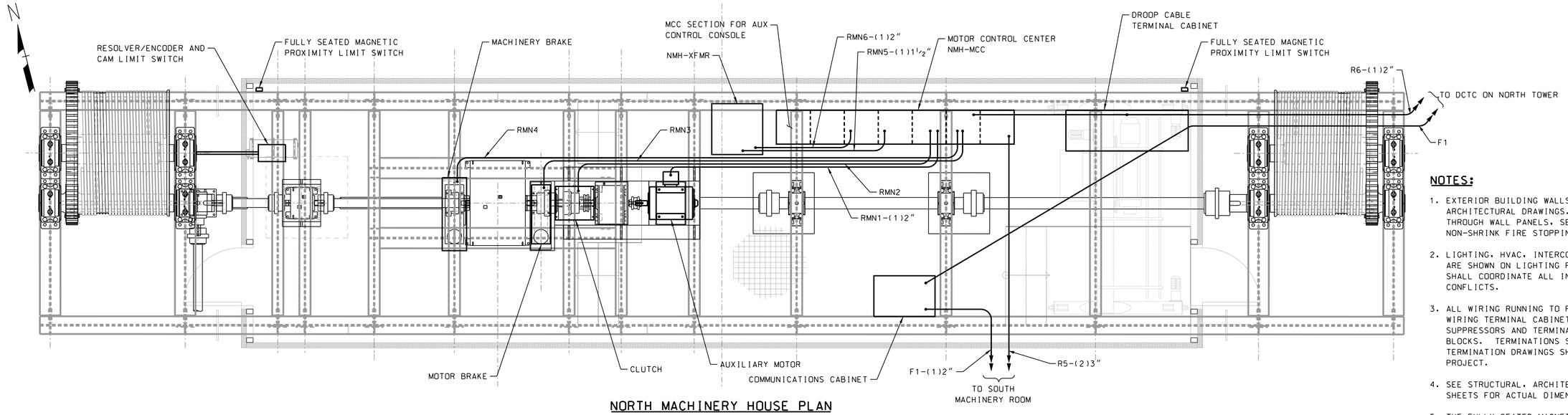

NORTH MACHINERY HOUSE PLAN

SCALE: 3/8" = 1'-0"

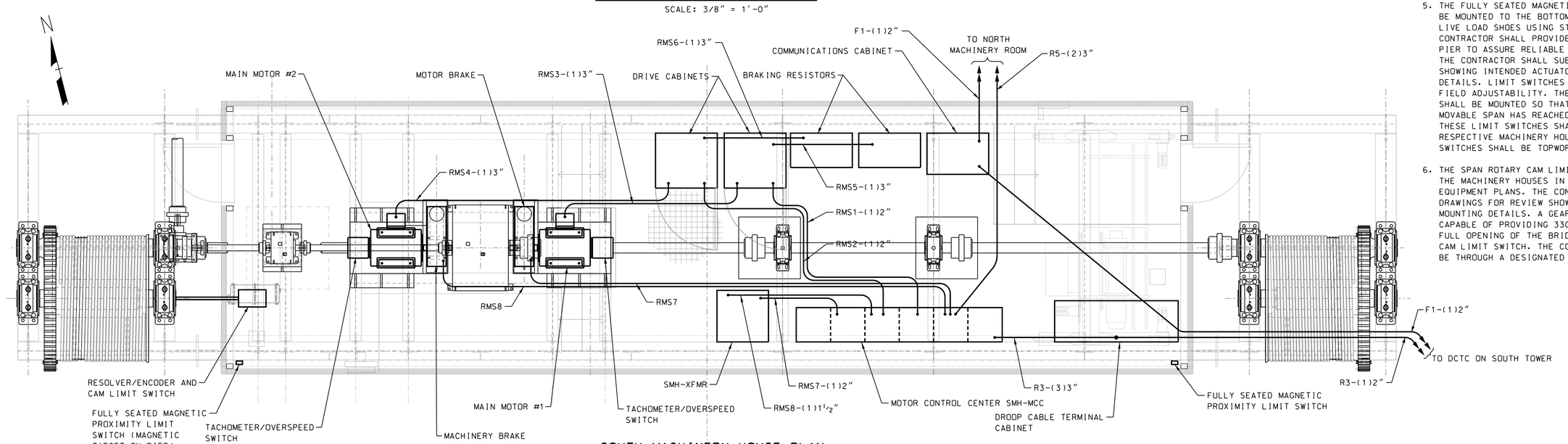

SOUTH MACHINERY HOUSE PLAN

SCALE: 3/8" = 1'-0"

NOTES:

1. EXTERIOR BUILDING WALLS ARE PANEL TYPE FOR DETAILS SEE ARCHITECTURAL DRAWINGS. WHERE CONDUITS/CABLES PASS THROUGH WALL PANELS, SEAL ALL HOLES WITH APPROVED NON-SHRINK FIRE STOPPING MATERIAL.
2. LIGHTING, HVAC, INTERCOM, AND FIRE ALARM INSTALLATIONS ARE SHOWN ON LIGHTING PLANS FOR CLARITY. CONTRACTOR SHALL COORDINATE ALL INSTALLATIONS IN THE FIELD TO AVOID CONFLICTS.
3. ALL WIRING RUNNING TO FIELD MOUNTED EQUIPMENT AND THE WIRING TERMINAL CABINETS SHALL BE PROTECTED BY SURGE SUPPRESSORS AND TERMINATED IN THE CABINET ON TERMINAL BLOCKS. TERMINATIONS SHALL BE LABELED AND AS-BUILT TERMINATION DRAWINGS SHALL BE SUBMITTED AT COMPLETION OF PROJECT.
4. SEE STRUCTURAL, ARCHITECTURAL, AND MECHANICAL BRIDGE SHEETS FOR ACTUAL DIMENSIONS AND DETAILS.
5. THE FULLY SEATED MAGNETIC PROXIMITY LIMIT SWITCHES SHALL BE MOUNTED TO THE BOTTOM OF THE MACHINERY ROOM NEAR THE LIVE LOAD SHOES USING STAINLESS STEEL HARDWARE. THE CONTRACTOR SHALL PROVIDE A MAGNETIC TARGET ON THE BRIDGE PIER TO ASSURE RELIABLE ACTUATION OF THE LIMIT SWITCH. THE CONTRACTOR SHALL SUBMIT SHOP DRAWINGS FOR REVIEW SHOWING INTENDED ACTUATOR AND LIMIT SWITCH MOUNTING DETAILS. LIMIT SWITCHES SHALL BE MOUNTED SO AS TO ALLOW FIELD ADJUSTABILITY. THE FULLY SEATED LIMIT SWITCHES SHALL BE MOUNTED SO THAT THEY ARE ACTUATED WHEN THE MOVABLE SPAN HAS REACHED THE FULLY SEATED POSITION. THESE LIMIT SWITCHES SHALL BE WIRED BACK TO THE RESPECTIVE MACHINERY HOUSE PLC DROPS. MAGNETIC PROXIMITY SWITCHES SHALL BE TOPWORX SERIES 80 OR APPROVED EQUAL.
6. THE SPAN ROTARY CAM LIMIT SWITCHES SHALL BE MOUNTED IN THE MACHINERY HOUSES IN THE LOCATIONS AS SHOWN ON THE EQUIPMENT PLANS. THE CONTRACTOR SHALL SUBMIT SHOP DRAWINGS FOR REVIEW SHOWING THE INTENDED LIMIT SWITCH MOUNTING DETAILS. A GEAR REDUCTION UNIT WITH A RATIO CAPABLE OF PROVIDING 330 DEGREES OF OPERATION DURING A FULL OPENING OF THE BRIDGE SHALL BE SUPPLIED WITH EACH CAM LIMIT SWITCH. THE CONNECTION TO THE ROTARY CAM SHALL BE THROUGH A DESIGNATED FLEXIBLE COUPLING.

80% SUBMISSION
JANUARY 18, 2012

ARCHER WESTERN CONTRACTORS

HNTB
HNTB Corporation
The HNTB Companies
Engineers Architects Planners

SUBDIRECTORY	.DGN LOCATOR	SHEET SCALE
Plans	13678F-E34-39_MH_Eq	1/4"=1'-0"

STATE OF NEW HAMPSHIRE
DEPARTMENT OF TRANSPORTATION * BUREAU OF BRIDGE DESIGN

TOWN PORTSMOUTH, NH - KITTERY, ME | BRIDGE NO. 247/084 | STATE PROJECT 13678

LOCATION US ROUTE 1 OVER THE PISCATAQUA RIVER

MACHINERY HOUSE EQUIPMENT PLAN

REVISIONS AFTER PROPOSAL				BY	DATE		BY	DATE
			DESIGNED	MCG	01/12	CHECKED	GP	01/12
			DRAWN	GS	01/12	CHECKED	DR	01/12
			QUANTITIES	XXX	XXX	CHECKED	XXX	XXX
			ISSUE DATE		FEDERAL PROJECT NO.		SHEET NO.	
			REV. DATE		BHF-T-0101(015)			

BRIDGE SHEET: E34 OF E67
FILE NUMBER: XXX-X-X
TOTAL SHEETS: XXX

DATE/TIME: 1/18/2012 3:35:43 PM USER: gstephenson
FILE NAME: s:\FFLW00\CADD\55519_Portsmouth_R1_Memorial_Bridge\E1\Plans\13678F-E34-39_MH_Eq.dgn
MODEL NAME: MH-Electrical-Equip
LAST SAVE: 1/18/2012 9:17:04 AM

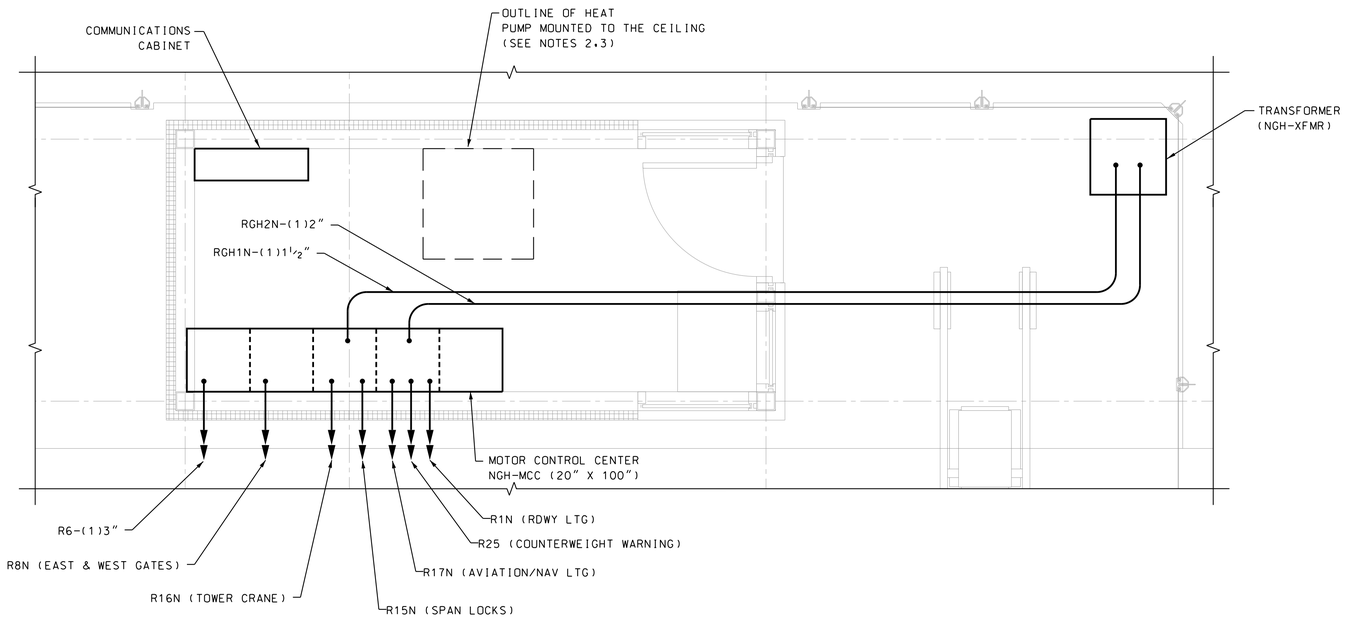

NORTH GATE TENDER HOUSE PLAN

SCALE: ½" = 1'-0"

NOTES:

1. SEE CONTROL HOUSE EQUIPMENT PLAN, FOR NOTES, ABBREVIATIONS, AND LEGENDS.
2. EQUIPMENT SHALL BE MOUNTED TO AVOID INTERFERENCE WITH THE MECHANICAL AND STRUCTURAL EQUIPMENT. ALL CABINET DOORS SHALL BE CAPABLE OF 90 DEGREE OPENING.
3. THE HEAT PUMP AND ELECTRIC BASEBOARD ARE SHOWN IN APPROXIMATE LOCATIONS. FOR ACTUAL LOCATIONS REFERENCE THE MECHANICAL PLANS. COORDINATE ELECTRIC BASEBOARD LOCATIONS WITH CABINETS SUCH THAT ALL DOORS OPEN AT LEAST 90 DEGREES.
4. RACEWAYS INSIDE GATE HOUSES SHALL BE SURFACE MOUNTED GALVANIZED RIGID STEEL CONDUIT.

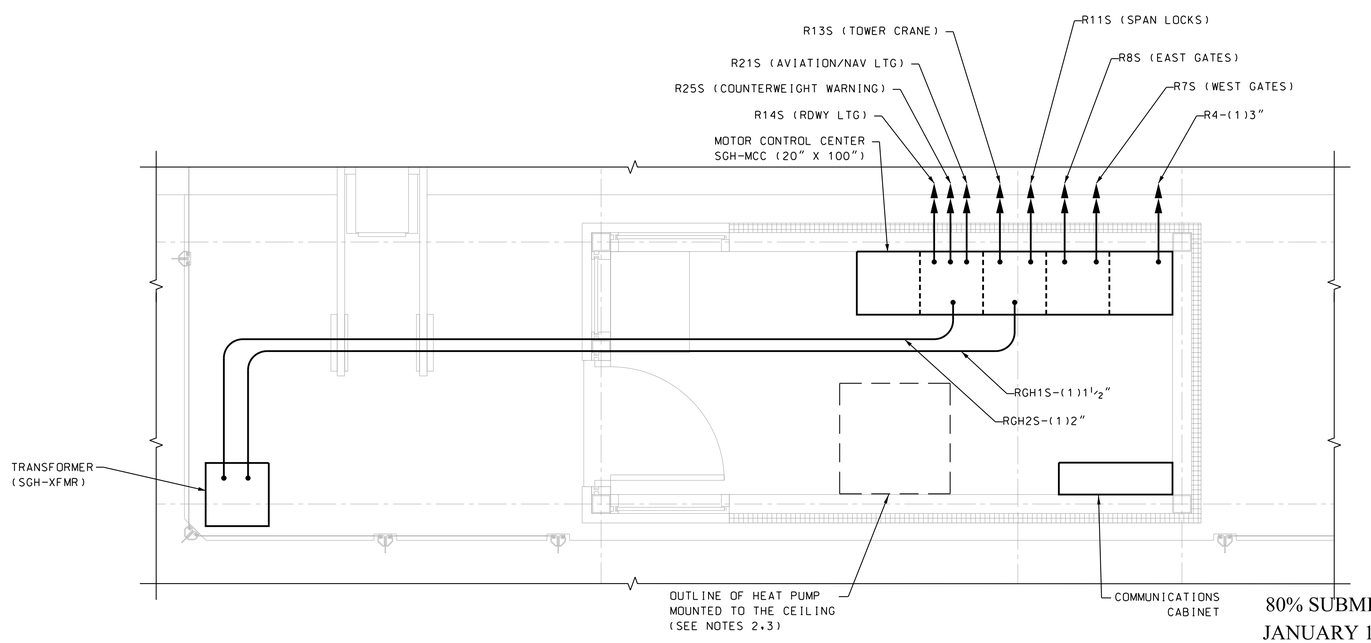

SOUTH GATE TENDER HOUSE PLAN

SCALE: ½" = 1'-0"

80% SUBMISSION
JANUARY 18, 2012

ARCHER WESTERN CONTRACTORS

HNTB
HNTB Corporation
The HNTB Companies
Engineers Architects Planners

SUBDIRECTORY	.DGN LOCATOR	SHEET SCALE
Plans	13678F-E35-40_GH_Eq	

STATE OF NEW HAMPSHIRE
DEPARTMENT OF TRANSPORTATION * BUREAU OF BRIDGE DESIGN

TOWN PORTSMOUTH, NH - KITTERY, ME BRIDGE NO. 247/084 STATE PROJECT 13678
LOCATION US ROUTE 1 OVER THE PISCATAQUA RIVER

GATE HOUSE EQUIPMENT PLAN

REVISIONS AFTER PROPOSAL			BY	DATE		BY	DATE
		DESIGNED	MCG	01/12	CHECKED	GP	01/12
		DRAWN	GS	01/12	CHECKED	DR	01/12
		QUANTITIES	XXX	XXX	CHECKED	XXX	XXX

ISSUE DATE	FEDERAL PROJECT NO.	SHEET NO.
REV. DATE	BHF-T-0101(015)	

BRIDGE SHEET: E35 OF E67
FILE NUMBER: XXX-X-X
TOTAL SHEETS: XXX

DATE/TIME:1/18/2012 3:35:49 PM USER:astephenson
FILE NAME:s:\FFL\WO\CADD\55519_Portsmouth_Rt1_Memorial_Bridge\E1\Plans\13678F-E35-40_GH_Eq.dgn
MODEL NAME:GH_Eleg_Equip
LAST SAVE:1/17/2012 9:32:04 AM

DETAILS TO BE REVISED
FOR NEXT SUBMISSION

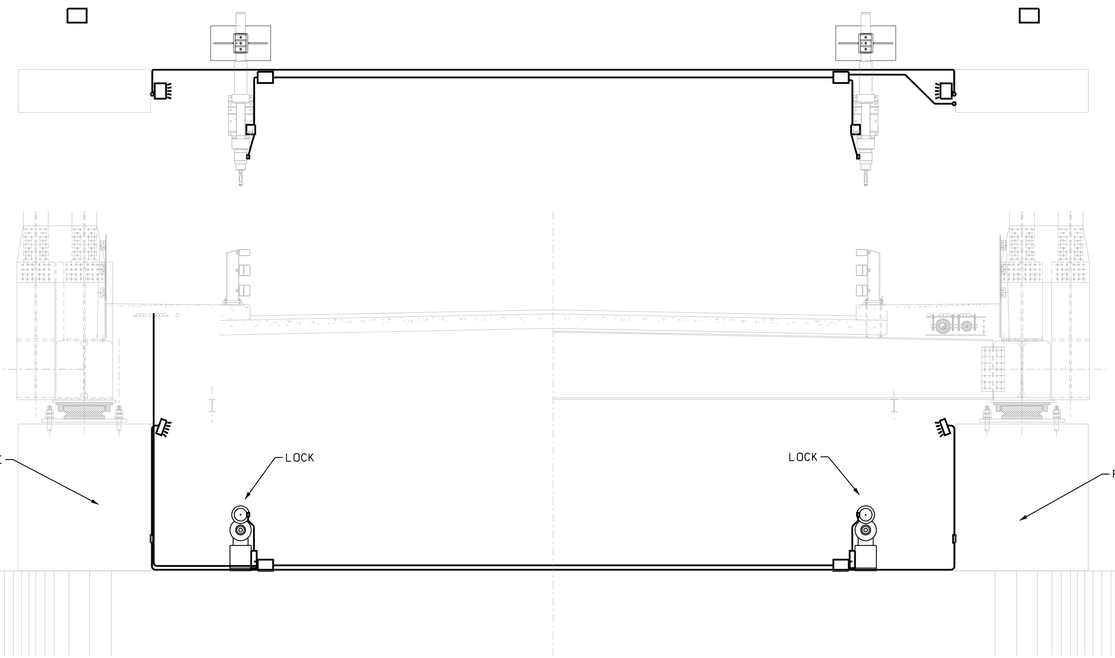

SECTION B-B
1/4" = 1'-0"

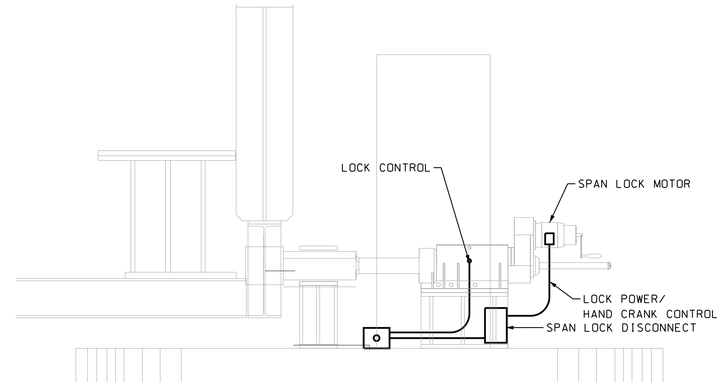

SECTION A-A
1/2" = 1'-0"

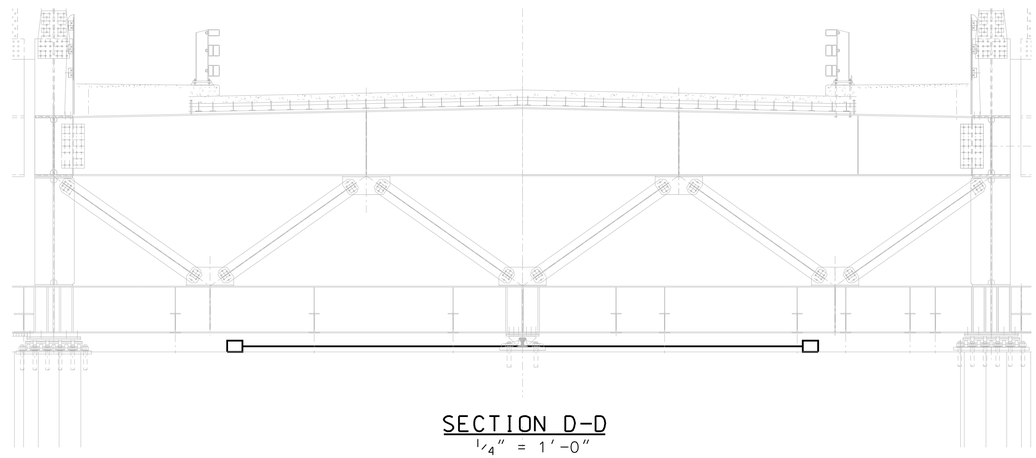

SECTION D-D
1/4" = 1'-0"

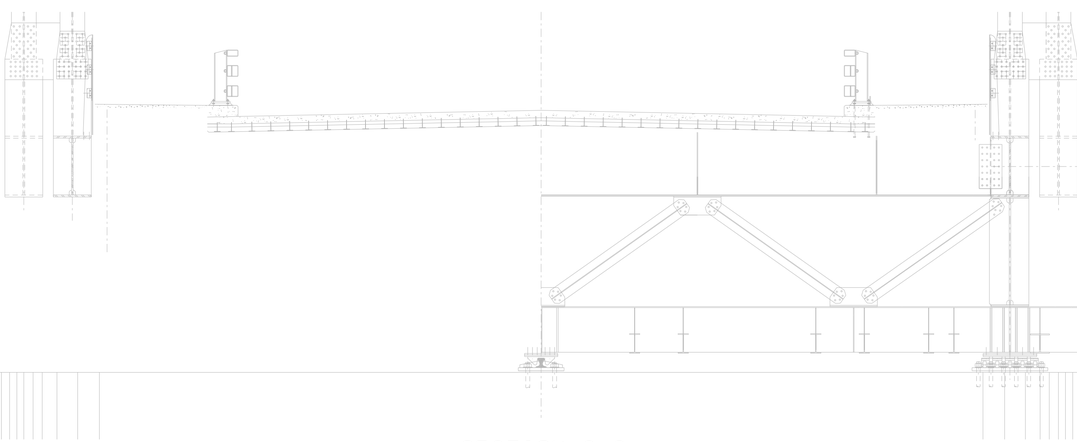

SECTION C-C
1/4" = 1'-0"

80% SUBMISSION
JANUARY 18, 2012

ARCHER WESTERN CONTRACTORS

HNTB
HNTB Corporation
The HNTB Companies
Engineers Architects Planners

SUBDIRECTORY	.DGN LOCATOR	SHEET SCALE
Plans	13678F-E36_PierEquip	3/8" = 1'-0"

STATE OF NEW HAMPSHIRE
DEPARTMENT OF TRANSPORTATION * BUREAU OF BRIDGE DESIGN

TOWN PORTSMOUTH, NH - KITTERY, ME BRIDGE NO. 247/084 STATE PROJECT 13678

LOCATION US ROUTE 1 OVER THE PISCATAQUA RIVER

PIER EQUIPMENT DETAILS 1

REVISIONS AFTER PROPOSAL		BY	DATE		BY	DATE
	DESIGNED	MCG	01/12	CHECKED	GP	01/12
	DRAWN	MDC	01/12	CHECKED	DR	01/12
	QUANTITIES	XXX	XX/XX	CHECKED	XXX	XX/XX

ISSUE DATE	FEDERAL PROJECT NO.	SHEET NO.	TOTAL SHEETS
REV. DATE	BHF-T-0101(015)	XXX	XXX

BRIDGE SHEET
E36 OF E67

FILE NUMBER
XXX-X-X

DATE/TIME:1/18/2012 3:35:53 PM USER:gstephenson
FILE NAME:s:\FFLw00\CADD\55519_Portsmouth_Rt1_Memorial_Bridge\E1\Plans\13678F-E36_PierEquip.dgn
MODEL NAME:Plan1
LAST SAVE:1/18/2012 2:33:51 PM

LEGEND:

- (S) SMOKE DETECTOR
- (H) HEAT DETECTOR
- PULL MANUAL PULL STATION
- HORN/STROBE
- WEATHERPROOF HORN/STROBE
- INTERCOM SYSTEM COMPONENT (SEE BLOCK DIAGRAM FOR DETAILS)
- DISCONNECT OR MOLDED CASE CIRCUIT BREAKER
- CH-LP 7 LIGHTING PANEL CIRCUIT NUMBER (PANEL CH-LP, CIRCUIT 7 SHOWN)
- CIRCUIT CONNECTION
- (F) CEILING MOUNTED EXHAUST FAN (SEE MECHANICAL PLANS FOR DETAILS)
- ▶ TELEPHONE JACK (3-LINES)
- ▷ ETHERNET JACK (RJ-45)

NOTES:

1. FURNISH ALL FIXTURES, LIGHTING EQUIPMENT, AND COMPONENTS SHOWN ON THE PLANS, LISTED ON THE FIXTURE SCHEDULE AND ALL LABOR AND MATERIALS TO INSTALL THE SPECIFIED EQUIPMENT IN THE MANNER INDICATED.
2. ALL LAMPS AND ACCESSORY WIRING, ENTIRE FIXTURES AND ALL COMPONENT ELECTRICAL PARTS SHALL BE LISTED BY UL. THE ENGINEER RESERVES THE RIGHT TO REQUIRE COLORS AND FINISHES TO MEET SPECIAL REQUIREMENTS ON THE BUILDING AND ON THE BRIDGE. REQUEST COLOR AND FINISH INFO PRIOR TO SUBMITTING SHOP DRAWINGS.
3. FURNISH AND INSTALL CONDUIT FITTINGS WHERE NECESSARY TO ENSURE CONDUIT/RACEWAY INSTALLATION ARE COMPLIANT WITH THE NATIONAL ELECTRIC CODE.
4. ALL EXTERIOR/EXPOSED CONDUIT SHALL BE PVC COATED RIGID GALVANIZED STEEL CONDUIT. ALL CONDUIT INSIDE CONTROL HOUSE SHALL BE GALVANIZED RIGID STEEL (GRS).
5. ALL WIRING RUNNING TO FIELD MOUNTED EQUIPMENT AND THE WIRING TERMINAL CABINETS SHALL BE PROTECTED BY SURGE SUPPRESSORS AND TERMINATED IN THE CABINET ON TERMINAL BLOCKS. TERMINATIONS SHALL BE LABELED AND AS- BUILT TERMINATION DRAWINGS SHALL BE SUBMITTED AT COMPLETION OF PROJECT.
6. LIGHTING FIXTURES SHALL BE MOUNTED TO AVOID INTERFERENCE WITH THE MECHANICAL AND STRUCTURAL EQUIPMENT. THE BOTTOM OF THE LIGHT FIXTURES SHALL BE MOUNTED 7 FEET MINIMUM ABOVE FINISHED FLOOR, UNLESS OTHERWISE NOTED.
7. EMERGENCY LIGHTING FIXTURES AND INSTALLATIONS SHALL COMPLY WITH UL 924.
8. CONFIGURE EXIT SIGN DIRECTIONAL CHEVRONS TO POINT TOWARD EGRESS DOORS.
9. WHERE LIGHTING FIXTURES ARE SPECIFIED WITH BATTERY BACKUP, BATTERIES SHALL BE OF THE MAINTENANCE-FREE TYPE, AND FIXTURES SHALL BE INSTALLED SUCH THAT THE BATTERY IS EASILY REMOVABLE FOR MAINTENANCE. BATTERY CHARGING SHALL BE BY SOLID-STATE CHARGER WITH REGULATED CHARGE VOLTAGE AND SHORT-CIRCUIT PROTECTION.
10. PROVIDE CONTROL ROOM LIGHTING WITH DIMMABLE BALLASTS. LIGHTS SHALL BE DIMMABLE AND SHALL BE CONTROLLED BY 3-WAY SWITCHES AT THE ENTRY TO THE CONTROL ROOM.
11. LIGHTING FIXTURES ON MOVABLE SPANS OR WHERE VIBRATION MAY BE A HAZARD TO LAMP LIFE SHALL BE INSTALLED WITH SHOCK ABSORBING LAMP RECEPTACLES.
12. CATALOG CUTS OF FIXTURES WITH COMPLETE PHOTOMETRIC DATA, WHERE DIFFERENT FROM THOSE INDICATED, SHALL BE SUBMITTED TO THE ENGINEER FOR APPROVAL. PROVIDE LIGHTING CALCULATIONS PERFORMED BY A LICENSED PROFESSIONAL ENGINEER WHERE FIXTURES ARE SUBSTITUTED. ENGINEER RESERVES THE SOLE RIGHT TO APPROVE/REJECT ALTERNATE LIGHTING CONCEPTS.
13. FLUORESCENT FIXTURES AND INCANDESCENT FIXTURES WITH MEDIUM-BASE SOCKETS SHALL BE INTERNALLY WIRED WITH MINIMUM NO. 16 AWG TYPE SFF-2 INSULATED FIXTURE WIRE. INCANDESCENT FIXTURES WITH MOGUL SOCKETS SHALL BE INTERNALLY WIRED WITH MINIMUM NO.14 AWG TYPE SFF-2 INSULATED FIXTURE WIRE.
14. EXCEPT IN THE CONTROL HOUSE AND GATE TENDER HOUSES, ALL FIXTURES PROVIDED SHALL BE RATED FOR WET/DAMP LOCATIONS. IN AREAS WITH MACHINERY, FIXTURES SHALL BE RUGGED AND IMPACT-RESISTANT.
15. BALLASTS SHALL BE FURNISHED AND INSTALLED AS REQUIRED FOR ALL LIGHTING FIXTURES. BALLASTS SHALL MEET THE REQUIREMENTS SPECIFIED AND SHALL BE DESIGNED TO MEET APPLICABLE CERTIFIED BALLAST MANUFACTURERS AND/OR AMERICAN STANDARD ASSOCIATION AND UNDERWRITER'S LABORATORIES SPECIFICATION. BALLASTS FURNISHED MUST PROVIDE LAMP WATTS WITHIN 90 PERCENT MINIMUM OF LAMP MANUFACTURER'S PUBLISHED RATINGS. ALL BALLASTS SHALL BE SOUND RATED "A". THE CONTRACTOR SHALL REPLACE ANY BALLASTS WHICH DO NOT OPERATE QUIETLY. BALLASTS SHALL BE APPLIED SUCH THAT THE BALLAST CASE TEMPERATURE WILL REMAIN BELOW 90 DEGREES C. FOR FULL BALLAST LIFE. THE BALLAST SHALL SUPPLY AN OPEN CIRCUIT VOLTAGE WHICH, AT THE MINIMUM SUPPLY VOLTAGE LIMIT, WILL MEET THE REQUIREMENTS OF THE LAMP MANUFACTURER, AND SHALL BE GUARANTEED TO START AT LEAST 90 PERCENT OF SEASONED HID LAMPS AT THE MINIMUM SUPPLY VOLTAGE LIMIT IN -20 DEGREE F. AMBIENT. ALL BALLASTS SHALL BE EQUIPPED WITH EITHER INTERNAL, NON-RESETTING THERMAL PROTECTION DEVICES ADJACENT TO THE COILS AND IN THE POWER CAPACITOR OR EACH BALLAST SHALL BE PROVIDED WITH DUAL-ELEMENT, INLINE, AND SLOW BLOWING EXTERNAL FUSE. ALL BALLASTS SHALL BE OF THE HIGH POWER FACTOR TYPE, WITH 120 V PRIMARIES. RADIO-FREQUENCY INTERFERENCE SUPPRESSERS SHALL BE PROVIDED.
16. ALL EMERGENCY LIGHTING SHALL BE CONNECTED TO THE SAME ROOM LIGHTING CIRCUIT AHEAD OF LIGHTING SWITCH.

LIGHTING FIXTURE SCHEDULE

SYMBOL	DESCRIPTION	LAMP	LUMINAIRE	VOLTAGE	MOUNTING METHOD
	OUTDOOR INCANDESCENT LIGHT, RATED FOR AREAS WITH MOISTURE AND CORROSIVE ATMOSPHERES	100W	APPLETON JBW10G-M	120V	WALL MOUNTED
EXIT	RED SINGLE-FACE TYPE LED EXIT SIGN WITH 90-MINUTE BATTERY BACKUP. ALUMINUM HOUSING. 6" HIGH & 3/4" WIDE LETTERS. SINGLE-FACE. MANUAL TEST SWITCH. AND SELF-TESTING DIAGNOSTICS.	-	DUAL-LITE SEMPRA SERIES	120V	WALL MOUNTED
	12"X48" SURFACE MOUNTED FLUORESCENT. RATED FOR CORROSIVE OR WET LOCATIONS	2-32W	GUTH DS-4-A-2-F32-1	120V	CEILING MOUNTED
	24"X24" CEILING MOUNTED FLUORESCENT	2-32W	COOPER LIGHTING 232AR-2BX40W-ETG-1DB-DU	120V	CEILING MOUNTED
	12"X48" CHAIN SUSPENDED FLUORESCENT, RATED FOR CORROSIVE OR WET LOCATIONS	2-32W	COOPER LIGHTING AB-W-B-3-T8-1-C-120	120V	CEILING MOUNTED
	EMERGENCY LIGHT WITH 90-MINUTE BATTERY BACKUP, LOW VOLTAGE DISCONNECT, AC LOCKOUT	2-7.2W	DUAL-LITE NHX2	120V	WALL MOUNTED

WIRING DEVICES SCHEDULE

SYMBOL	DESCRIPTION	CURRENT RATING	VOLTAGE RATING	MANUFACTURER'S PART #
$	HEAVY DUTY SINGLE POLE, BACK AND SIDE WIRED SWITCH	20A	120/277V AC	HUBBELL 1221
$3	HEAVY DUTY 3-POLE, BACK AND SIDE WIRED SWITCH	20A	120/277 VAC	HUBBELL 1221
$D	WALL MOUNTED DIMMER SWITCH	20A	120/277 VAC	-
	HEAVY DUTY WEATHER RESISTANT SINGLE RECEPTACLE, BACK AND SIDE WIRED	20A	120 VAC	HUBBELL 5361
	HEAVY DUTY WEATHER RESISTANT DUPLEX RECEPTACLE, BACK AND SIDE WIRED	20A	125 VAC	HUBBELL 5362
	QUAD DUPLEX WEATHER RESISTANT RECEPTACLE (TWO 20 AMP RECEPTACLES IN SAME BOX)	20A	125 VAC	HUBBELL 5362
GFI	LED DUPLEX GFCI RECEPTACLE	20A	120 VAC	HUBBELL GF20L
GFI W	LED DUPLEX GFCI RECEPTACLE IN WEATHERPROOF ENCLOSURE	20A	120 VAC	HUBBELL GF20L

80% SUBMISSION
JANUARY 18, 2012

ARCHER WESTERN CONTRACTORS

HNTB
HNTB Corporation
The HNTB Companies
Engineers Architects Planners

SUBDIRECTORY	.DGN LOCATOR	SHEET SCALE
Plans	13678F-E37_LtgLegend_Sch	NONE

STATE OF NEW HAMPSHIRE
DEPARTMENT OF TRANSPORTATION * BUREAU OF BRIDGE DESIGN

TOWN PORTSMOUTH, NH - KITTERY, ME BRIDGE NO. 247/084 STATE PROJECT 13678

LOCATION US ROUTE 1 OVER THE PISCATAQUA RIVER

LIGHTING LEGEND AND SCHEDULE

REVISIONS AFTER PROPOSAL		BY	DATE		BY	DATE
	DESIGNED	MCG	01/12	CHECKED	GP	01/12
	DRAWN	GS	01/12	CHECKED	DR	01/12
	QUANTITIES	XXX	XX/XX	CHECKED	XXX	XX/XX

ISSUE DATE	FEDERAL PROJECT NO.	SHEET NO.	TOTAL SHEETS
REV. DATE	BHF-T-0101(015)	XXX	XXX

BRIDGE SHEET E37 OF E67
FILE NUMBER XXX-X-X

DATE/TIME:1/18/2012 3:35:54 PM USER:gstephenson
FILE NAME:s:\FFLw00\CADD\55519_Portsmouth_R1_Memorial_BridgeE1\Plans\13678F-E37_LtgLegend_Sch.dgn
MODEL NAME:PLAN
LAST SAVE:1/17/2012 11:43:59 AM

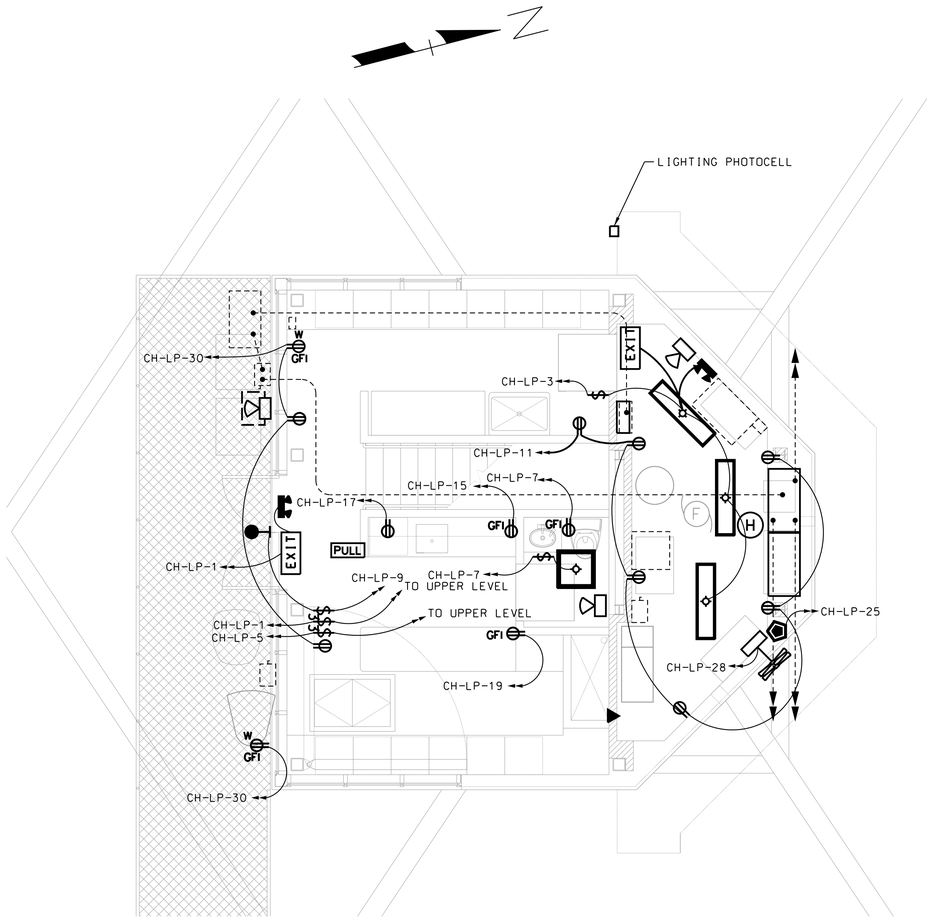

CONTROL HOUSE LOWER LEVEL

SCALE: 1/4"=1'-0"

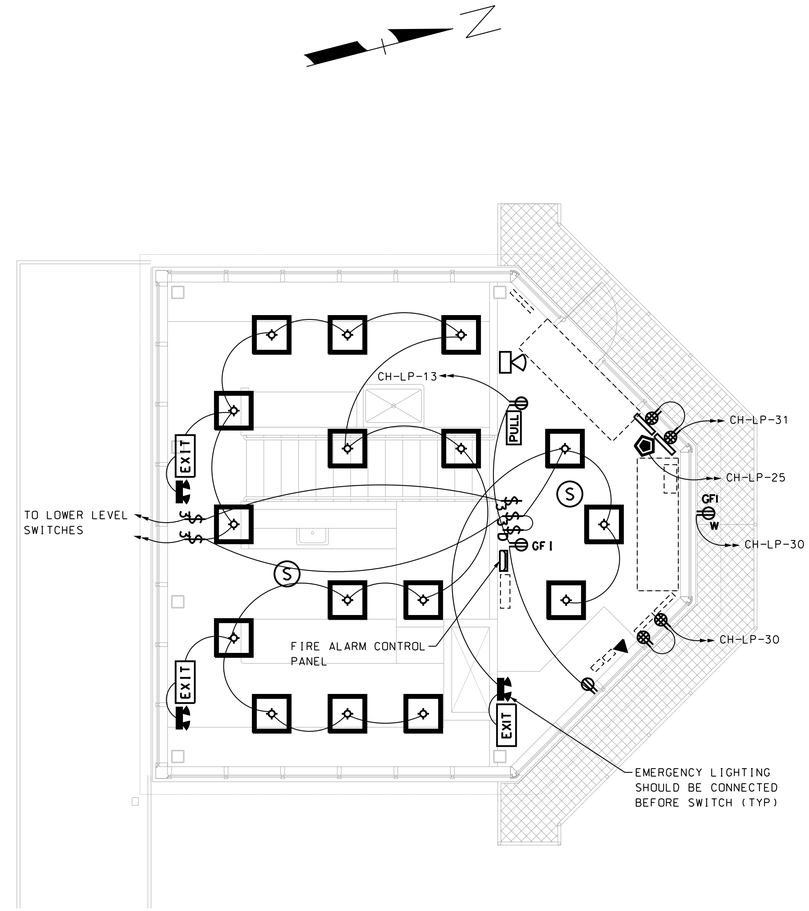

CONTROL HOUSE UPPER LEVEL

SCALE: 1/4"=1'-0"

NOTES:

1. MAXIMUM SPACING OF CONDUIT SUPPORTS SHALL BE 6 FEET ON CENTER.
2. ATTACH UNISTRUT SUPPORT TO CONCRETE WITH SS EPOXY ANCHORS, SIZED PER MANUFACTURER'S RECOMMENDATIONS.
3. ALL EXTERIOR / EXPOSED CONDUIT SHALL BE PVC COATED RIGID GALVANIZED STEEL CONDUIT. ALL CONDUIT INSIDE CONTROL HOUSE SHALL BE GALVANIZED RIGID STEEL (GRS). CONDUIT SHALL BE ROUTED THROUGH CHASES WHICH ARE DETAILED ON THE ARCHITECTURAL PLANS. NOTE THE CONTROL HOUSE HAS A 360 DEGREE VIEW OF WINDOWS.
4. EXTERIOR BUILDING WALLS ARE PANEL TYPE FOR DETAILS SEE ARCHITECTURAL DRAWINGS FOR DETAIL. WHERE CONDUITS/CABLES PASS THROUGH WALL PANELS, SEAL ALL HOLES WITH APPROVED NON-SHRINK FIRE STOPPING MATERIAL.
5. CONTRACTOR SHALL FURNISH AND INSTALL CONDUIT FITTINGS WHERE NECESSARY TO ENSURE CONDUIT/RACEWAY INSTALLATION ARE COMPLIANT WITH THE NATIONAL ELECTRIC CODE LATEST EDITION.
6. LIGHTING, INTERCOM, AND FIRE ALARM INSTALLATIONS ARE SHOWN ON LIGHTING PLANS FOR CLARITY. CONTRACTOR SHALL COORDINATE ALL INSTALLATIONS IN THE FIELD TO AVOID CONFLICTS.
7. ALL WIRING RUNNING TO FIELD MOUNTED EQUIPMENT AND THE WIRING TERMINAL CABINETS SHALL BE PROTECTED BY SURGE SUPRESSORS AND TERMINATED IN THE CABINET ON TERMINAL BLOCKS. TERMINATIONS SHALL BE LABELED AND AS-BUILT TERMINATION DRAWINGS SHALL BE SUBMITTED AT COMPLETION OF PROJECT.
8. SEE STRUCTURAL, ARCHITECTURAL, AND MECHANICAL BRIDGE SHEETS FOR ACTUAL DIMENSIONS AND DETAILS.

LEGEND:

- DISCONNECT OR MOLDED CASE CIRCUIT BREAKER
- NEW ELECTRICAL EQUIPMENT
- NEW ELECTRICAL CONDUIT, CONCEALED BELOW FINISHED FLOOR

80% SUBMISSION
JANUARY 18, 2012

ARCHER WESTERN CONTRACTORS

HNTB
HNTB Corporation
The HNTB Companies
Engineers Architects Planners

SUBDIRECTORY	.DGN LOCATOR	SHEET SCALE
Plans	13678F-E33-38_CH_Eq	1/4"=1'-0"

STATE OF NEW HAMPSHIRE
DEPARTMENT OF TRANSPORTATION * BUREAU OF BRIDGE DESIGN

TOWN PORTSMOUTH, NH - KITTERY, ME BRIDGE NO. 247/084 STATE PROJECT 13678
LOCATION US ROUTE 1 OVER THE PISCATAQUA RIVER

CONTROL HOUSE LIGHTING PLAN

REVISIONS AFTER PROPOSAL		BY	DATE		BY	DATE
	DESIGNED	MCG	01/12	CHECKED	GP	01/12
	DRAWN	GS	01/12	CHECKED	DR	01/12
	QUANTITIES	XXX	XXX	CHECKED	XXX	XXX

ISSUE DATE	FEDERAL PROJECT NO.	SHEET NO.
REV. DATE	BHF-T-0101(015)	

BRIDGE SHEET E38 OF E67
FILE NUMBER XXX-X-X
TOTAL SHEETS XXX

DATE/TIME:1/18/2012 4:22:16 PM USER:gstephenson
FILE NAME:U:&5519_Portsmouth_Rt1_Memorial_Bridge&E1&Plans&13678F-E33-38_CH_Eq.dgn
MODEL NAME:CH_Lighting
LAST SAVE:1/17/2012 1:25:02 PM

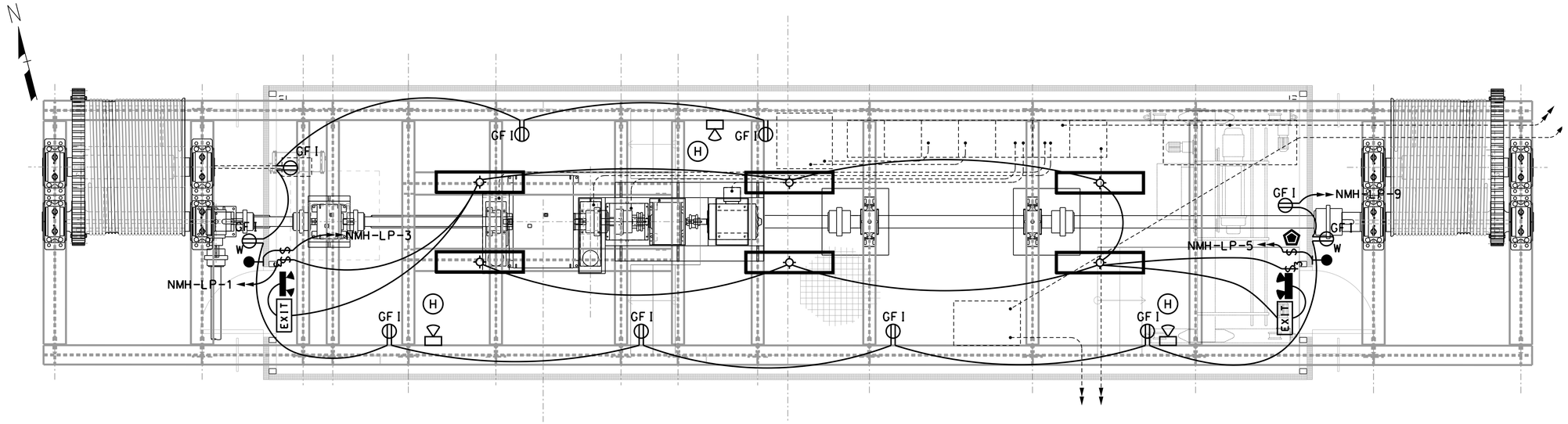

NORTH MACHINERY HOUSE PLAN

SCALE: 3/8" = 1'-0"

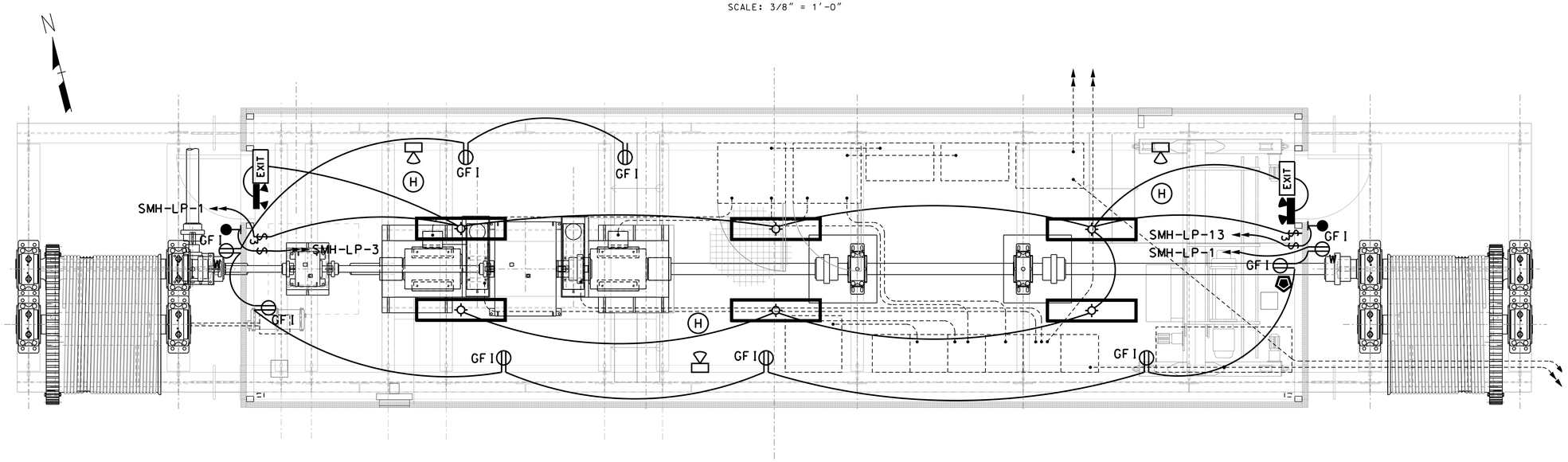

SOUTH MACHINERY HOUSE PLAN

SCALE: 3/8" = 1'-0"

NOTES:

1. EXTERIOR BUILDING WALLS ARE PANEL TYPE FOR DETAILS SEE ARCHITECTURAL DRAWINGS. WHERE CONDUITS/CABLES PASS THROUGH WALL PANELS, SEAL ALL HOLES WITH APPROVED NON-SHRINK FIRE STOPPING MATERIAL.
2. LIGHTING, INTERCOM, AND FIRE ALARM INSTALLATIONS ARE SHOWN ON LIGHTING PLANS FOR CLARITY. CONTRACTOR SHALL COORDINATE ALL INSTALLATIONS IN THE FIELD TO AVOID CONFLICTS.
3. ALL WIRING RUNNING TO FIELD MOUNTED EQUIPMENT AND THE WIRING TERMINAL CABINETS SHALL BE PROTECTED BY SURGE SUPRESSORS AND TERMINATED IN THE CABINET ON TERMINAL BLOCKS. TERMINATIONS SHALL BE LABELED AND AS-BUILT TERMINATION DRAWINGS SHALL BE SUBMITTED AT COMPLETION OF PROJECT.
4. SEE STRUCTURAL, ARCHITECTURAL, AND MECHANICAL BRIDGE SHEETS FOR ACTUAL DIMENSIONS AND DETAILS.
5. LOCATION OF ALL EQUIPMENT SHOWN SUBJECT TO CHANGE.

80% SUBMISSION
JANUARY 18, 2012

ARCHER WESTERN CONTRACTORS

HNTB
HNTB Corporation
The HNTB Companies
Engineers Architects Planners

SUBDIRECTORY	.DGN LOCATOR	SHEET SCALE
Plans	13678F-E34-39_MH_Eq	1/4"=1'-0"

STATE OF NEW HAMPSHIRE
DEPARTMENT OF TRANSPORTATION * BUREAU OF BRIDGE DESIGN

TOWN PORTSMOUTH, NH - KITTERY, ME BRIDGE NO. 247/084 STATE PROJECT 13678

LOCATION US ROUTE 1 OVER THE PISCATAQUA RIVER

MACHINERY HOUSE LIGHTING PLAN

REVISIONS AFTER PROPOSAL		BY	DATE		BY	DATE
	DESIGNED	MCG	01/12	CHECKED	GP	01/12
	DRAWN	GS	01/12	CHECKED	DR	01/12
	QUANTITIES	XXX	XXX	CHECKED	XXX	XXX
	ISSUE DATE		FEDERAL PROJECT NO.		SHEET NO.	
	REV. DATE		BHF-T-0101(015)			

BRIDGE SHEET E39 OF E67
FILE NUMBER XXX-X-X
TOTAL SHEETS XXX

DATE/TIME: 1/18/2012 3:35:46 PM USER: gstephenson
FILE NAME: s:\FFLw00\CADD\55519_Portsmouth_Rt1_Memorial_Bridge\Plans\13678F-E34-39_MH_Eq.dgn
MODEL NAME: MH_Lighting
LAST SAVE: 1/18/2012 9:17:04 AM

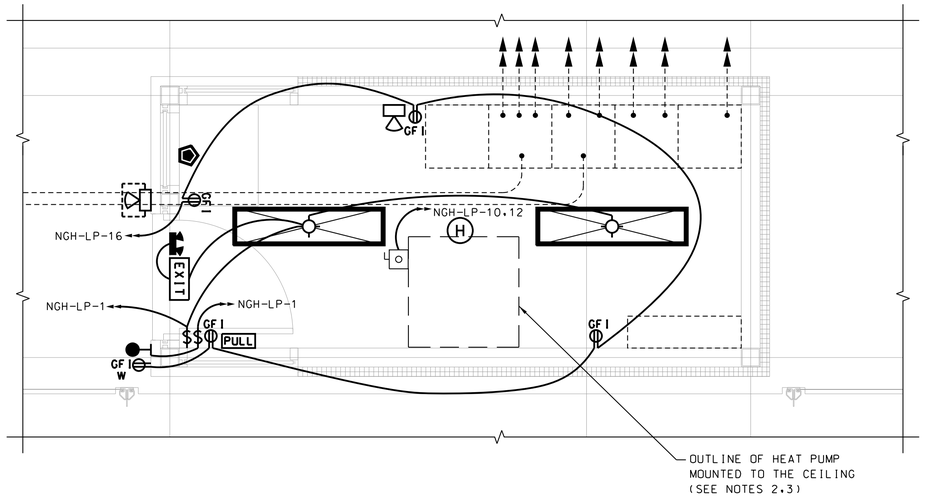

NORTH GATE TENDER HOUSE PLAN

SCALE: 1/2" = 1'-0"

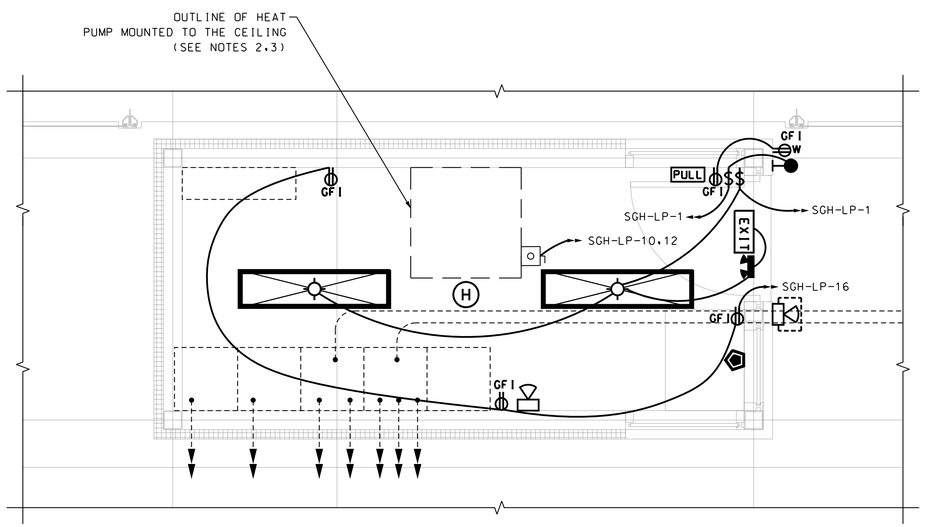

SOUTH GATE TENDER HOUSE PLAN

SCALE: 1/2" = 1'-0"

NOTES:

1. SEE CONTROL HOUSE EQUIPMENT PLAN, FOR NOTES, ABBREVIATIONS, AND LEGENDS.
2. EQUIPMENT SHALL BE MOUNTED TO AVOID INTERFERENCE WITH THE MECHANICAL AND STRUCTURAL EQUIPMENT. ALL CABINET DOORS SHALL BE CAPABLE OF 90 DEGREE OPENING.
3. THE HEAT PUMP AND ELECTRIC BASEBOARD ARE SHOWN IN APPROXIMATE LOCATIONS. FOR ACTUAL LOCATIONS REFERENCE THE MECHANICAL PLANS. COORDINATE ELECTRIC BASEBOARD LOCATIONS WITH CABINETS SUCH THAT ALL DOORS OPEN AT LEAST 90 DEGREES.
4. RACEWAYS INSIDE GATE HOUSES SHALL BE SURFACE MOUNTED GALVANIZED RIGID STEEL CONDUIT.

80% SUBMISSION
JANUARY 18, 2012

ARCHER WESTERN CONTRACTORS

HNTB
HNTB Corporation
The HNTB Companies
Engineers Architects Planners

SUBDIRECTORY	.DGN LOCATOR	SHEET SCALE
Plans	13678F-E35-40_GH_Eq	

STATE OF NEW HAMPSHIRE
DEPARTMENT OF TRANSPORTATION * BUREAU OF BRIDGE DESIGN

TOWN PORTSMOUTH, NH - KITTERY, ME BRIDGE NO. 247/084 STATE PROJECT 13678
LOCATION US ROUTE 1 OVER THE PISCATAQUA RIVER

GATE HOUSE LIGHTING PLAN

REVISIONS AFTER PROPOSAL		BY	DATE		BY	DATE
	DESIGNED	MCG	01/12	CHECKED	GP	01/12
	DRAWN	GS	01/12	CHECKED	DR	01/12
	QUANTITIES	XXX	XXX	CHECKED	XXX	XXX

ISSUE DATE	FEDERAL PROJECT NO.	SHEET NO.
REV. DATE	BHF-T-0101(015)	

BRIDGE SHEET: E40 OF E67
FILE NUMBER: XXX-X-X
TOTAL SHEETS: XXX

DATE/TIME: 1/18/2012 3:35:49 PM USER: gstephenson
FILE NAME: s:\FFL\WOO\CADD\55519_Portsmouth_Rt1_Memorial_Bridge\E1\Plans\13678F-E35-40_GH_Eq.dgn
MODEL NAME: GH_Lighting
LAST SAVE: 1/17/2012 9:32:04 AM

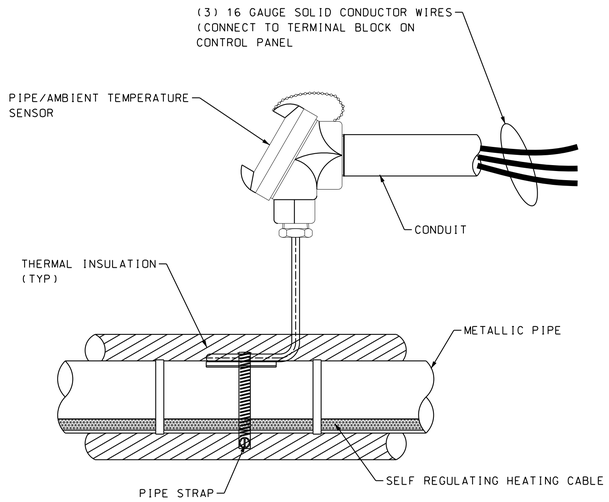

PIPE/AMBIENT TEMPERATURE SENSOR TYPICAL INSTALLATION DETAIL

NOT TO SCALE

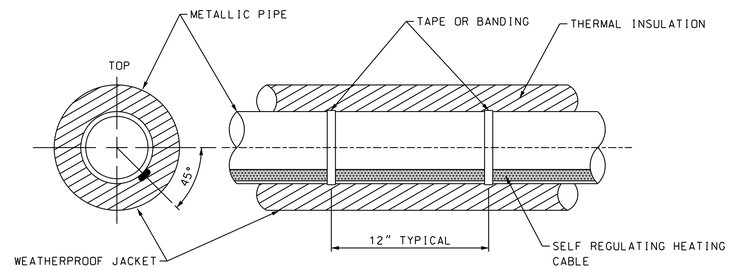

ONE RUN OF CABLE TYPICAL INSTALLATION DETAIL

NOT TO SCALE

NOTES:

1. THE CONTRACTOR SHALL PROVIDE, INSTALL AND INTERCONNECT A COMPLETE HEAT TRACE SYSTEM. THE DESIGN IS BASED ON CHROMALOX AND APPROVED EQUALS MEETING THE FUNCTIONALITY OBTAINED BY THE COMPONENTS SHOWN. THE MAJOR COMPONENTS ARE BUT NOT LIMITED THE FOLLOWING:
   - HTLS-4C-1-X-F-1 CONTROLLER (4 LOOP)
   - SRL-3-1-C HEAT TRACE CABLE SELF-REGULATING LOW TEMPERATURE
   - RTPC POWER CONNECTION KIT
   - RTST SPLICE AND TEE KIT
   - RTD TEMPERATURE SENSOR
   - RTES END SEAL KIT
   - PS-X METAL PIPE STRAP KIT
   - CL-1 "CAUTION" LABELS
   - AT-1 ALUMINUM TAPE FOR CABLE ATTACHMENTS
2. THE CONTRACTOR SHALL SUBMIT HEAT LOSS CALCULATIONS FROM HEAT TRACE SYSTEM VENDOR BASED ON APPROVED PIPE, INSULATION, AND AMBIENT TEMPERATURE. THE CALCULATIONS SHALL VERIFY PROPER WATTS PER FOOT AND CIRCUIT LENGTH. ADJUSTMENTS REQUIRED SHALL BE COVERED UNDER THE CONTRACTORS BID AND NO EXTRA PAYMENT WILL BE MADE BASED ON ADJUSTMENTS REQUIRED.
3. SPARE HEAT TRACE CABLES SHALL BE INSTALLED AND TERMINATED. THESE SHALL BE AVAILABLE FOR USE IF PRIMARY CABLE FAILS.
4. CONNECT HEAT TRACE SYSTEM TO PLC. PLC SHALL REPORT FAILURE OF ANY ZONE AND ALL AVAILABLE FAULTS IN THE HEAT TRACE CONTROLLER.
5. ALL CONDUITS SHOWN SHALL BE PVCRGS.

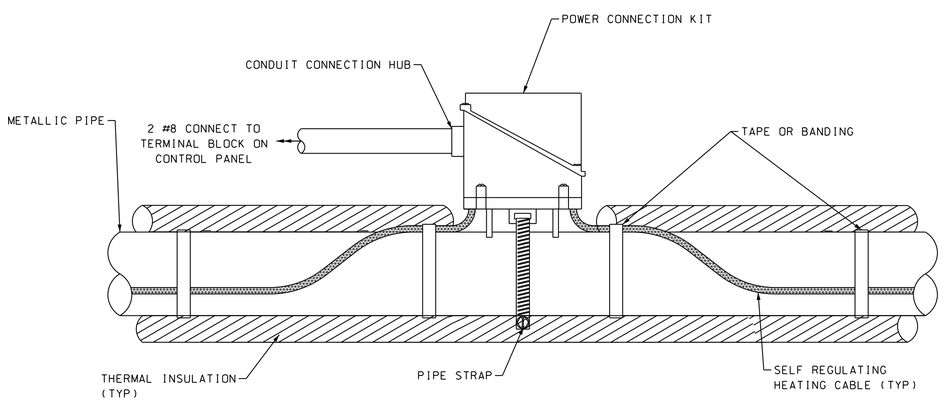

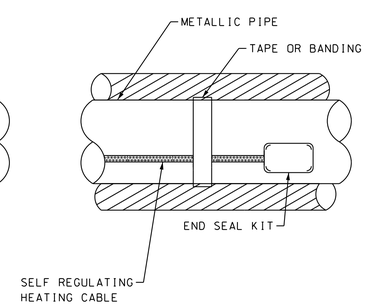

CABLE AND POWER CONNECTION TYPICAL INSTALLATION DETAIL

NOT TO SCALE

(ONE CABLE SHOWN - PROVIDE PRIMARY AND SECONDARY CABLES AND POWER CONNECTION KITS)

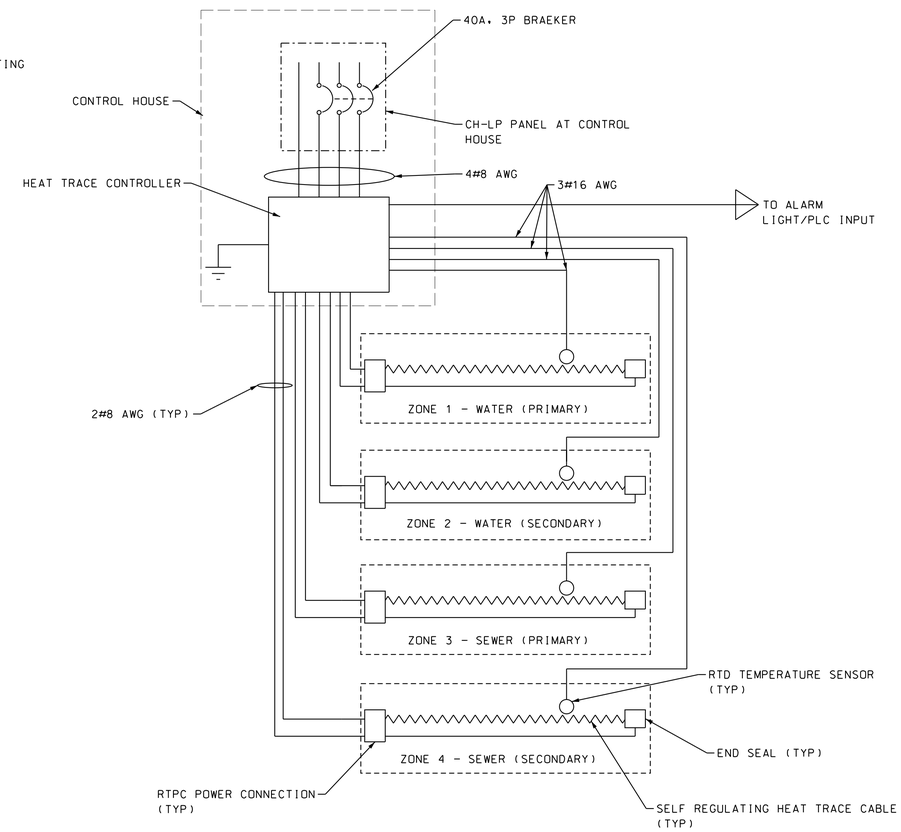

HEAT TRACE ONE-LINE DIAGRAM

80% SUBMISSION
JANUARY 18, 2012

ARCHER WESTERN CONTRACTORS

HNTB
HNTB Corporation
The HNTB Companies
Engineers Architects Planners

SUBDIRECTORY	.DGN LOCATOR	SHEET SCALE
Plans	13678F-E43_HeatTrace	1" = 50'-0"

STATE OF NEW HAMPSHIRE
DEPARTMENT OF TRANSPORTATION * BUREAU OF BRIDGE DESIGN

TOWN PORTSMOUTH, NH - KITTERY, ME BRIDGE NO. 247/084 STATE PROJECT 13678
LOCATION US ROUTE 1 OVER THE PISCATAQUA RIVER

HEAT TRACE DETAILS

REVISIONS AFTER PROPOSAL		BY	DATE		BY	DATE
	DESIGNED	MCG	01/12	CHECKED	XXX	01/12
	DRAWN	GS	01/12	CHECKED	DR	01/12
	QUANTITIES	XXX	XXX	CHECKED	XXX	XXX

ISSUE DATE	FEDERAL PROJECT NO.	SHEET NO.	TOTAL SHEETS
REV. DATE	BHF-T-0101(015)	E67	XXX

BRIDGE SHEET E43 OF E67
FILE NUMBER XXX-X-X

DATE/TIME:1/18/2012 5:40:21 PM USER:gstephenson
FILE NAME:s:sFFLw00sCADDs55519_Portsmouth_Rt1_Memorial_Bridges$1sPlans$13678F-E43_HeatTrace.dgn
MODEL NAME:Heat Trace
LAST SAVE:1/18/2012 5:40:11 PM

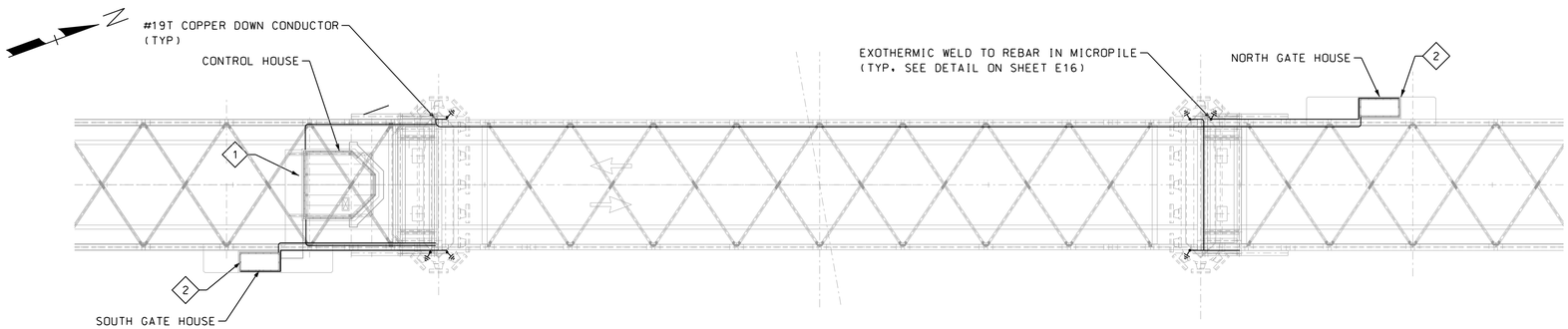

PLAN

SCALE: 1" = 30'-0"

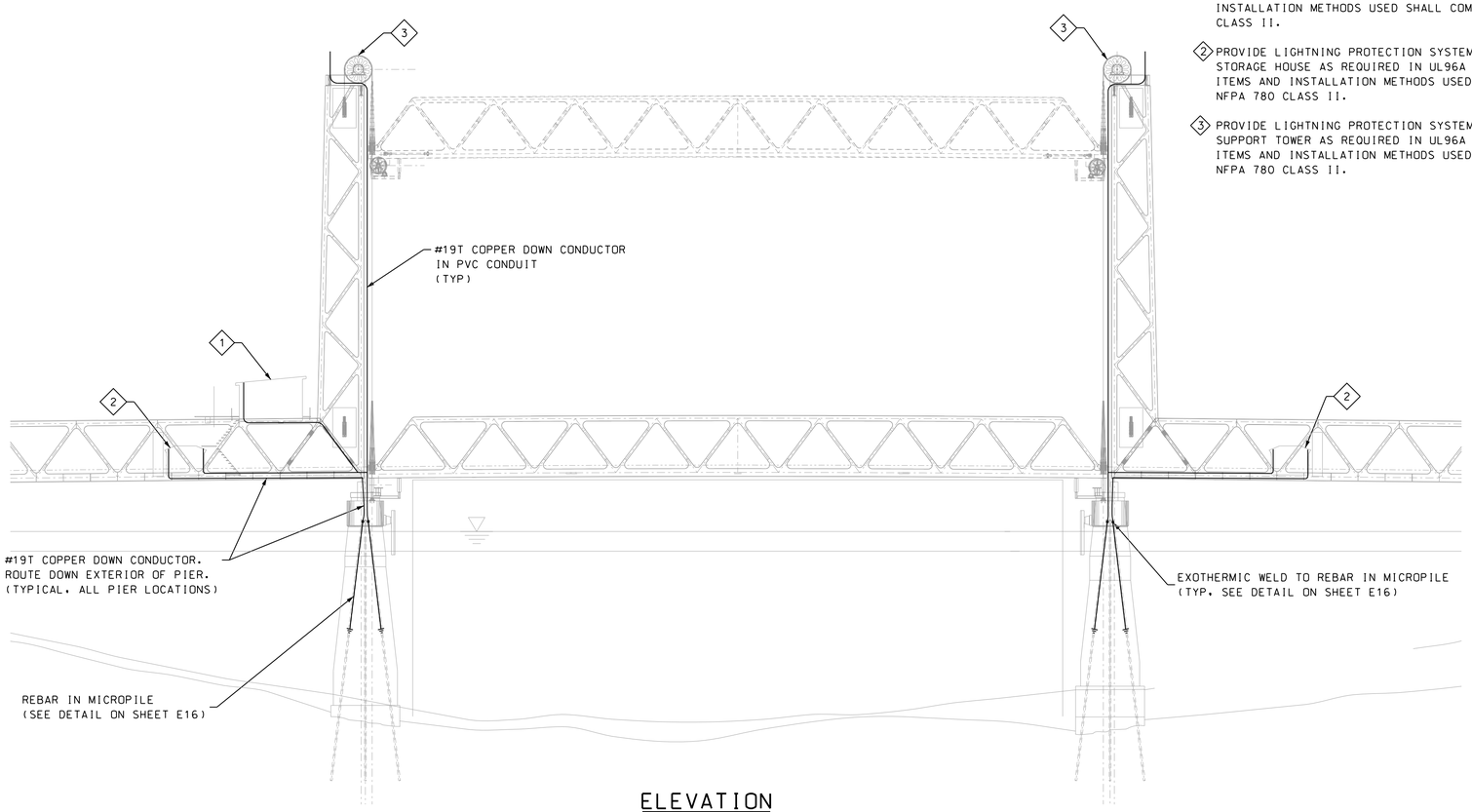

ELEVATION

SCALE: 1" = 30'-0"

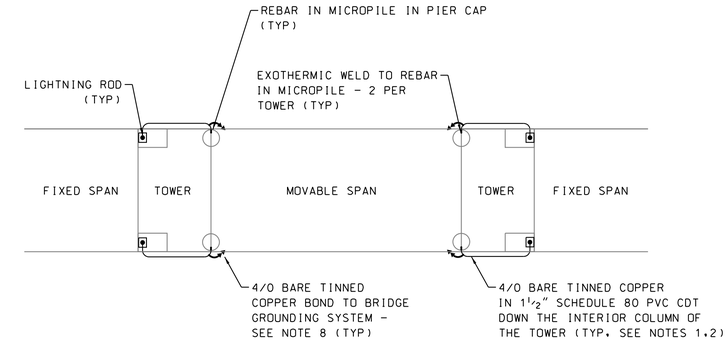

LIGHTNING PROTECTION DOWN CONDUCTOR PLAN

NO SCALE

LEGEND:

1. PROVIDE LIGHTNING PROTECTION SYSTEM FOR CONTROL HOUSE AS REQUIRED IN UL96A & NFPA 780. ALL ITEMS AND INSTALLATION METHODS USED SHALL COMPLY WITH NFPA 780 CLASS II.

2. PROVIDE LIGHTNING PROTECTION SYSTEM FOR GATE TENDER/ STORAGE HOUSE AS REQUIRED IN UL96A & NFPA 780. ALL ITEMS AND INSTALLATION METHODS USED SHALL COMPLY WITH NFPA 780 CLASS II.

3. PROVIDE LIGHTNING PROTECTION SYSTEM FOR TOP SHEAVE SUPPORT TOWER AS REQUIRED IN UL96A & NFPA 780. ALL ITEMS AND INSTALLATION METHODS USED SHALL COMPLY WITH NFPA 780 CLASS II.

NOTES:

1. USE ONE HOLE SS PIPE STRAP AND SS STUD ANCHORS AT 5 FEET INTERVAL FOR SUPPORT OF CONDUIT.

2. IN ADDITION TO STANDARD ADHESIVE, USE 2 - 25 X M8 X1.25 STAINLESS STEEL BOLTS (DRILL AND TAP STRUCTURAL STEEL) TO ATTACH FLAT BASES, 180 DEGREES APART. USE 25 FENDER WASHERS UNDER EACH BOLT HEAD PER MANUFACTURERS REQUIREMENTS. SEE SHEET E45 FOR TYPICAL DETAILS.

3. SHOP DRAWINGS SHALL BE SUBMITTED FOR APPROVAL TO THE ENGINEER IDENTIFYING THE SPECIFIC MOUNTING DETAILS UTILIZED IN EACH LOCATION ON THE BRIDGE. TYPICAL MOUNTING DETAILS ARE IDENTIFIED ON SHEET E45.

4. AIR TERMINAL SPACING, BONDING DISTANCE, MATERIAL COMPATIBILITY, AND MATERIAL CLASS SHALL CONFORM TO NFPA 780 AND UL 96A. AIR TEMRINALS AND LIGHTNING PROTECTION SHALL BE UL LISTED AND OSHA APPROVED.

5. ALL LIGHTNING PROTECTION WORK, INCLUDING LAYOUT OF DEVICES, PREPARATION OF SHOP DRAWINGS, AND INSTALLATION SHALL BE PERFORMED BY A UL LISTED LIGHTNING PROTECTION INSTALLER.

6. OBTAIN A LIGHTNING PROTECTION MASTER LABEL INSPECTION CERTIFICATE THROUGH INSPECTION BY UL LISTED THIRD-PARTY INSPECTION AGENCY.

7. SEE SPECIFICATIONS FOR ADDITIONAL WORK AND DIRECTION ON LIGHTNING PROTECTION WORK.

8. BOND CONDUCTORS FOR THE LIGHTNING PROTECTION SYSTEM SHALL BE TERMINATED AT CONCRETE-ENCASED GROUNDING ELECTRODES INSTALLED IN THE PIER MICROPILES. GROUNDING ELECTRODES ARE ALSO PROVIDED IN THE PIER MICROPILES FOR USE IN THE BRIDGE GROUNDING SYSTEM (SEE SHEET E16). BOND TOGETHER ALL MICROPILE GROUNDING ELECTRODES IN ORDER TO PROVIDE ELECTRICAL CONTINUITY BETWEEN THE LIGHTNING PROTECTION SYSTEM AND THE BRIDGE GROUNDING SYSTEM. CONNECTION SHALL BE MADE INSIDE PIER CAP BY MEANS OF AN APPROVED CONDUCTOR INSTALLED PRIOR TO POURING OF CONCRETE. SEE STRUCTURAL PLANS FOR MORE INFORMATION. SUBMIT SHOP DRAWINGS SHOWING PROPOSED METHODS FOR REVIEW AND APPROVAL.

80% SUBMISSION
JANUARY 18, 2012

ARCHER WESTERN CONTRACTORS

HNTB
HNTB Corporation
The HNTB Companies
Engineers Architects Planners

SUBDIRECTORY	.DGN LOCATOR	SHEET SCALE
Plans	13678F-E44_LtgProtDetails1	1" = 20'-0"

STATE OF NEW HAMPSHIRE
DEPARTMENT OF TRANSPORTATION * BUREAU OF BRIDGE DESIGN

TOWN PORTSMOUTH, NH - KITTERY, ME BRIDGE NO. 247/084 STATE PROJECT 13678

LOCATION US ROUTE 1 OVER THE PISCATAQUA RIVER

LIGHTNING PROTECTION DETAILS 1

REVISIONS AFTER PROPOSAL		BY	DATE		BY	DATE
	DESIGNED	MCG	01/12	CHECKED	GP	01/12
	DRAWN	MDC	01/12	CHECKED	DR	01/12
	QUANTITIES	XXX	XX/XX	CHECKED	XXX	XX/XX

ISSUE DATE	FEDERAL PROJECT NO.	SHEET NO.	TOTAL SHEETS
REV. DATE	BHF-T-0101(015)	XXX	XXX

BRIDGE SHEET: E44 OF E67
FILE NUMBER: XXX-X-X

DATE/TIME:1/18/2012 3:35:56 PM USER:gstephenson
FILE NAME:s:\FFLw00\CADD\55519_Portsmouth_Rt1_Memorial_Bridges\Plans\13678F-E44_LtgProtDetails1.dgn
MODEL NAME:Plan
LAST SAVE:1/17/2012 1:35:16 PM

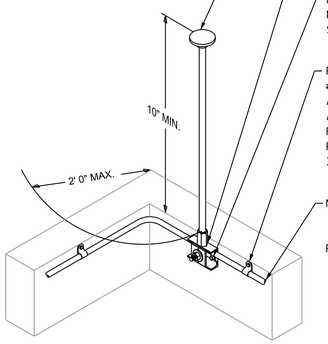

NLP FLATHEAD(TM) AIR TERMINAL:
CLASS 1 - USE #FH-C3 NP 12 NS
CLASS 2 - USE #FH-C2 NP 12 NS
FOR SURFACES NOT COMPATIBLE WITH COPPER:
CLASS 1 - USE #FH-A2 NP 12 NS
CLASS 2 - USE #FH-A2 NP58 12 NS

NLP 801E EXTRUDED SIDE MOUNT AIR TERMINAL BASE. FOR SURFACES NOT COMPATIBLE WITH COPPER USE NLP #801AE EXTRUDED SIDE MOUNT AIR TERMINAL BASE

MOUNT AIR TERMINAL BASE WITH (2) NLP #TEKSS5 SELF TAPPING STAINLESS STEEL SCREWS.

FASTEN COPPER CONDUCTORS WITH NLP #1302 COPPER CABLE LOOPS. FASTEN ALUMINUM CONDUCTORS WITH NLP #1302A ALUMINUM CABLE LOOPS. LIGHTNING PROTECTION CONDUCTORS SHALL BE FASTENED AT INTERVALS NOT MORE THAN 36" ON CENTER.

NLP LIGHTNING PROTECTION CONDUCTORS:
CLASS 1 - USE #27 COPPER CONDUCTOR
CLASS 2 - USE #29 COPPER CONDUCTOR.
FOR SURFACES NOT COMPATIBLE WITH COPPER:
CLASS 1 - USE #10A ALUMINUM CONDUCTOR
CLASS 2 - USE #19A ALUMINUM CONDUCTOR

DETAIL 1: SIDE MOUNT AIR TERMINAL

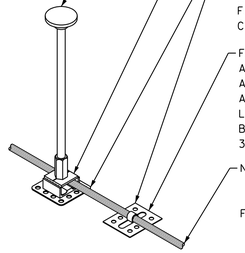

NLP FLATHEAD(TM) AIR TERMINAL:
CLASS 1 - USE #FH-C3 Y NS
CLASS 2 - USE #FH-C2 Y 12 NS
FOR SURFACES NOT COMPATIBLE WITH COPPER:
CLASS 1 - USE #FH-A2 Y 12 NS
CLASS 2 - USE #FH-A2 Y58 NS

NLP #803E EXTRUDED ADHESIVE AIR TERMINAL BASE.
FOR SURFACES NOT COMPATIBLE WITH COPPER USE #803AE EXTRUDED AIR TERMINAL BASE.

MOUNT ADHESIVE FITTINGS WITH ROOF SYSTEM MANUFACTURER APPROVED ADHESIVE. ALL REQUIRED SLIP SHEETS, BATTEN STRIPS, PAVERS, AND SPECIAL REQUIREMENTS OF THE ROOFING SYSTEM MANUFACTURER SHALL BE FURNISHED AND INSTALLED BY THE ROOFING CONTRACTOR.

FASTEN COPPER CONDUCTORS WITH NLP #1308 ADHESIVE COPPER CABLE HOLDERS. FASTEN ALUMINUM CONDUCTORS WITH NLP #1308A ADHESIVE ALUMINUM CABLE HOLDERS. LIGHTNING PROTECTION CONDUCTORS SHALL BE FASTENED AT INTERVALS NOT MORE THAN 36" ON CENTER.

NLP LIGHTNING PROTECTION CONDUCTORS:
CLASS 1 - USE #27 COPPER CONDUCTOR
CLASS 2 - USE #29 COPPER CONDUCTOR.
FOR SURFACES NOT COMPATIBLE WITH COPPER USE:
CLASS 1 - USE #10A ALUMINUM CONDUCTOR
CLASS 2 - USE #19A ALUMINUM CONDUCTOR

DETAIL 2: ADHESIVE AIR TERMINAL

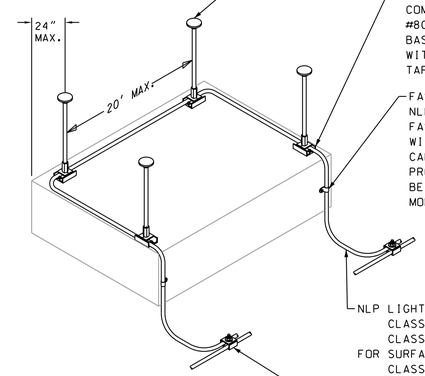

NLP FLATHEAD(TM) AIR TERMINAL:
CLASS 1 - USE #FH-C3 NP 12 NS
CLASS 2 - USE #FH-C2 NP 12 NS
FOR SURFACES NOT COMPATIBLE WITH COPPER:
CLASS 1 - USE #FH-A2 NP 12 NS
CLASS 2 - USE #FH-A2 NP58 12 NS

NLP #804E COPPER AIR TERMINAL BASE. FOR SURFACES NOT COMPATIBLE WITH COPPER USE #804AE ALUMINUM AIR TERMINAL BASE. MOUNT AIR TERMINAL BASE WITH (2) NLP #TEKSS5 SELF TAPPING STAINLESS STEEL SCREWS.

FASTEN COPPER CONDUCTORS WITH NLP #1302 COPPER CABLE LOOPS. FASTEN ALUMINUM CONDUCTORS WITH NLP #1302A ALUMINUM CABLE LOOPS. LIGHTNING PROTECTION CONDUCTORS SHALL BE FASTENED AT INTERVALS NOT MORE THAN 36" ON CENTER.

NLP LIGHTNING PROTECTION CONDUCTORS:
CLASS 1 - USE #27 COPPER CONDUCTOR
CLASS 2 - USE #29 COPPER CONDUCTOR.
FOR SURFACES NOT COMPATIBLE WITH COPPER USE:
CLASS 1 - USE #10A ALUMINUM CONDUCTOR
CLASS 2 - USE #19A ALUMINUM CONDUCTOR

EXTRUDED PARALLEL CABLE SPLICER:
USE NLP #1007E FOR COPPER CONDUCTORS.
USE NLP #1007AE FOR ALUMINUM CONDUCTORS.

DETAIL 3: EQUIPMENT PROTECTION

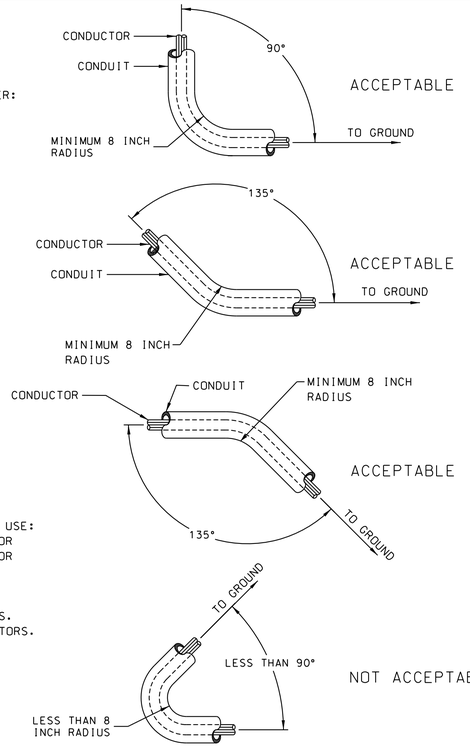

DETAIL 4: CONDUCTORS

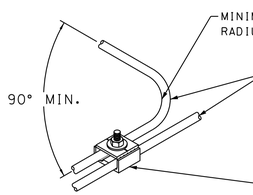

NLP LIGHTNING PROTECTION CONDUCTORS:
CLASS 1 - USE #27 COPPER CONDUCTOR
CLASS 2 - USE #29 COPPER CONDUCTOR.
FOR SURFACES NOT COMPATIBLE WITH COPPER:
CLASS 1 - USE #10A ALUMINUM CONDUCTOR
CLASS 2 - USE #19A ALUMINUM CONDUCTOR

EXTRUDED PARALLEL CABLE SPLICER:
USE NLP #1007E FOR COPPER CONDUCTORS.
USE NLP #1007AE FOR ALUMINUM CONDUCTORS.

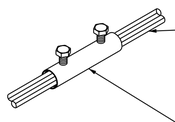

NLP LIGHTNING PROTECTION CONDUCTORS:
CLASS 1 - USE #27COPPER CONDUCTOR
CLASS 2 - USE #29 COPPER CONDUCTOR.
FOR SURFACES NOT COMPATIBLE WITH COPPER:
CLASS 1 - USE #10A ALUMINUM CONDUCTOR
CLASS 2 - USE #19A ALUMINUM CONDUCTOR

CABLE TO CABLE END SPLICER:
USE NLP #1005X FOR COPPER CONDUCTORS.
USE NLP #1005AX FOR ALUMINUM CONDUCTORS.

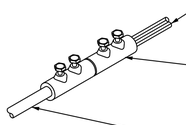

NLP LIGHTNING PROTECTION CONDUCTORS:
CLASS 1 - USE #27COPPER CONDUCTOR
CLASS 2 - USE #29 COPPER CONDUCTOR.

MAKE COPPER TO ALUMINUM CONDUCTOR CONNECTIONS WITH A NLP #1010E BIMETALLIC CONNECTOR (WHERE REQUIRED)

NLP LIGHTNING PROTECTION CONDUCTORS:
CLASS 1 - USE #10A ALUMINUM CONDUCTOR
CLASS 2 - USE #19A ALUMINUM CONDUCTOR

DETAIL 5: CONDUCTOR SPLICES

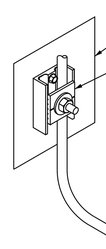

GROUNDED METAL OBJECT WITHIN CALCULATED BONDING DISTANCE

NLP #1019E EXTRUDED 3 SQUARE INCH BONDING PLATE. FOR SURFACES NOT COMPATIBLE WITH COPPER USE NLP #1019AE EXTRUDED 3 SQUARE INCH BONDING PLATE. FASTEN PLATE TO CLEANED BARE METAL SURFACE WITH (2) NLP #TEKSS5 SELF TAPPING STAINLESS STEEL SCREWS.

NLP LIGHTNING PROTECTION CONDUCTORS:
CLASS 1 - USE #27 COPPER CONDUCTOR
CLASS 2 - USE #29 COPPER CONDUCTOR.
FOR SURFACES NOT COMPATIBLE WITH COPPER:
CLASS 1 - USE #10A ALUMINUM CONDUCTOR
CLASS 2 - USE #19A ALUMINUM CONDUCTOR

DETAIL 7: EQUIPMENT BONDING

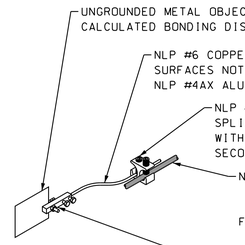

UNGROUNDED METAL OBJECT WITHIN CALCULATED BONDING DISTANCE

NLP #6 COPPER SECONDARY BONDING WIRE. FOR SURFACES NOT COMPATIBLE WITH COPPER USE NLP #4AX ALUMINUM BONDING WIRE.

NLP #1347E EXTRUDED SECONDARY CABLE SPLICER. FOR SURFACES NOT COMPATIBLE WITH COPPER USE NLP #1347AE EXTRUDED SECONDARY CABLE SPLICER.

NLP LIGHTNING PROTECTION CONDUCTORS:
CLASS 1 - USE #27 COPPER CONDUCTOR
CLASS 2 - USE #29 COPPER CONDUCTOR.
FOR SURFACES NOT COMPATIBLE WITH COPPER:
CLASS 1 - USE #10A ALUMINUM CONDUCTOR
CLASS 2 - USE #19A ALUMINUM CONDUCTOR

NLP #1035E EXTRUDED SECONDARY BONDING LUG. FOR SURFACES NOT COMPATIBLE WITH COPPER USE NLP #1035AE EXTRUDED SECONDARY BONDING LUG

DETAIL 6: SECONDARY BONDING

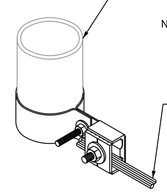

NLP 4" DIAMETER PIPE BONDING STRAP:
USE #1040E FOR PIPES COMPATIBLE WITH COPPER
USE #1040AE FOR PIPES COMPATIBLE WITH ALUMINUM
NLP 6" DIAMETER PIPE BONDING STRAP:
USE #1041E FOR PIPES COMPATIBLE WITH COPPER
USE #1041AE FOR PIPES COMPATIBLE WITH ALUMINUM
NLP 8" DIAMETER PIPE BONDING STRAP:
USE #1042E FOR PIPES COMPATIBLE WITH COPPER
USE #1042AE FOR PIPES COMPATIBLE WITH ALUMINUM

NLP LIGHTNING PROTECTION CONDUCTORS:
CLASS 1 - USE #27 COPPER CONDUCTOR
CLASS 2 - USE #29 COPPER CONDUCTOR.
FOR SURFACES NOT COMPATIBLE WITH COPPER:
CLASS 1 - USE #10A ALUMINUM CONDUCTOR
CLASS 2 - USE #19A ALUMINUM CONDUCTOR

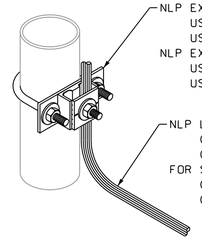

NLP EXTRUDED PIPE BONDING CLAMP FOR 1-1/4" TO 2-1/4" OD PIPE
USE #1048E FOR PIPES COMPATIBLE WITH COPPER
USE #1048AE FOR PIPES COMPATIBLE WITH ALUMINUM
NLP EXTRUDED PIPE BONDING CLAMP FOR 2-1/4" TO 3-1/2" OD PIPE
USE #1049E FOR PIPES COMPATIBLE WITH COPPER
USE #1049AE FOR PIPES COMPATIBLE WITH ALUMINUM

NLP LIGHTNING PROTECTION CONDUCTORS:
CLASS 1 - USE #27 COPPER CONDUCTOR
CLASS 2 - USE #29 COPPER CONDUCTOR.
FOR SURFACES NOT COMPATIBLE WITH COPPER:
CLASS 1 - USE #10A ALUMINUM CONDUCTOR
CLASS 2 - USE #19A ALUMINUM CONDUCTOR

DETAIL 8: PIPE BONDING

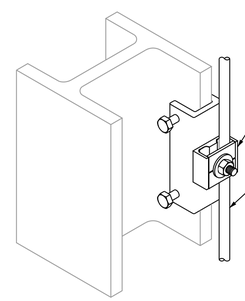

NLP #1015E EXTRUDED 8 SQUARE INCH BONDING CLAMP. FOR SURFACES NOT COMPATIBLE WITH COPPER USE NLP #1015AE EXTRUDED 8 SQUARE INCH BONDING CLAMP. ATTACH CLAMP TO CLEANED BARE METAL SURFACE.

NLP LIGHTNING PROTECTION CONDUCTORS:
CLASS 1 - USE #27 COPPER CONDUCTOR
CLASS 2 - USE #29 COPPER CONDUCTOR.
FOR SURFACES NOT COMPATIBLE WITH COPPER:
CLASS 1 - USE #10A ALUMINUM CONDUCTOR
CLASS 2 - USE #19A ALUMINUM CONDUCTOR

DETAIL 9: BONDING CLAMP

NOTES:

1. DETAILS SHOWN FOR TYPICAL INSTALLATIONS. DEVELOP/DETAILS PROVIDE ADDITIONAL EQUIPMENT TO MEET ALL REQUIREMENTS OF NFPA 780 AND UL 96A WHETHER EXPRESSLY SHOWN OR NOT.

80% SUBMISSION
JANUARY 18, 2012

ARCHER WESTERN CONTRACTORS

HNTB
HNTB Corporation
The HNTB Companies
Engineers Architects Planners

SUBDIRECTORY	.DGN LOCATOR	SHEET SCALE
Plans	13678F-E45_LtgProtDetails2	1" = 50'-0"

STATE OF NEW HAMPSHIRE
DEPARTMENT OF TRANSPORTATION * BUREAU OF BRIDGE DESIGN

TOWN PORTSMOUTH, NH - KITTERY, ME BRIDGE NO. 247/084 STATE PROJECT 13678
LOCATION US ROUTE 1 OVER THE PISCATAQUA RIVER

LIGHTNING PROTECTION DETAILS 2

REVISIONS AFTER PROPOSAL		BY	DATE		BY	DATE
	DESIGNED	MCG	01/12	CHECKED	XXX	01/12
	DRAWN	GS	01/12	CHECKED	DR	01/12
	QUANTITIES	XXX	01/12	CHECKED	XXX	01/12
	ISSUE DATE			FEDERAL PROJECT NO.	SHEET NO.	TOTAL SHEETS
	REV. DATE			BHF-T-0101(015)	XXX	XXX

BRIDGE SHEET E45 OF E67
FILE NUMBER XXX-X-X

DATE/TIME:1/18/2012 3:35:58 PM USER:gstephenson
FILE NAME:s:&FFLw00s&CADDs55519_Portsmouth_Rt1_Memorial_Bridges&E1&Plans&13678F-E45_LtgProtDetails2.dgn
MODEL NAME:PLAN
LAST SAVE:1/17/2012 12:17:58 PM

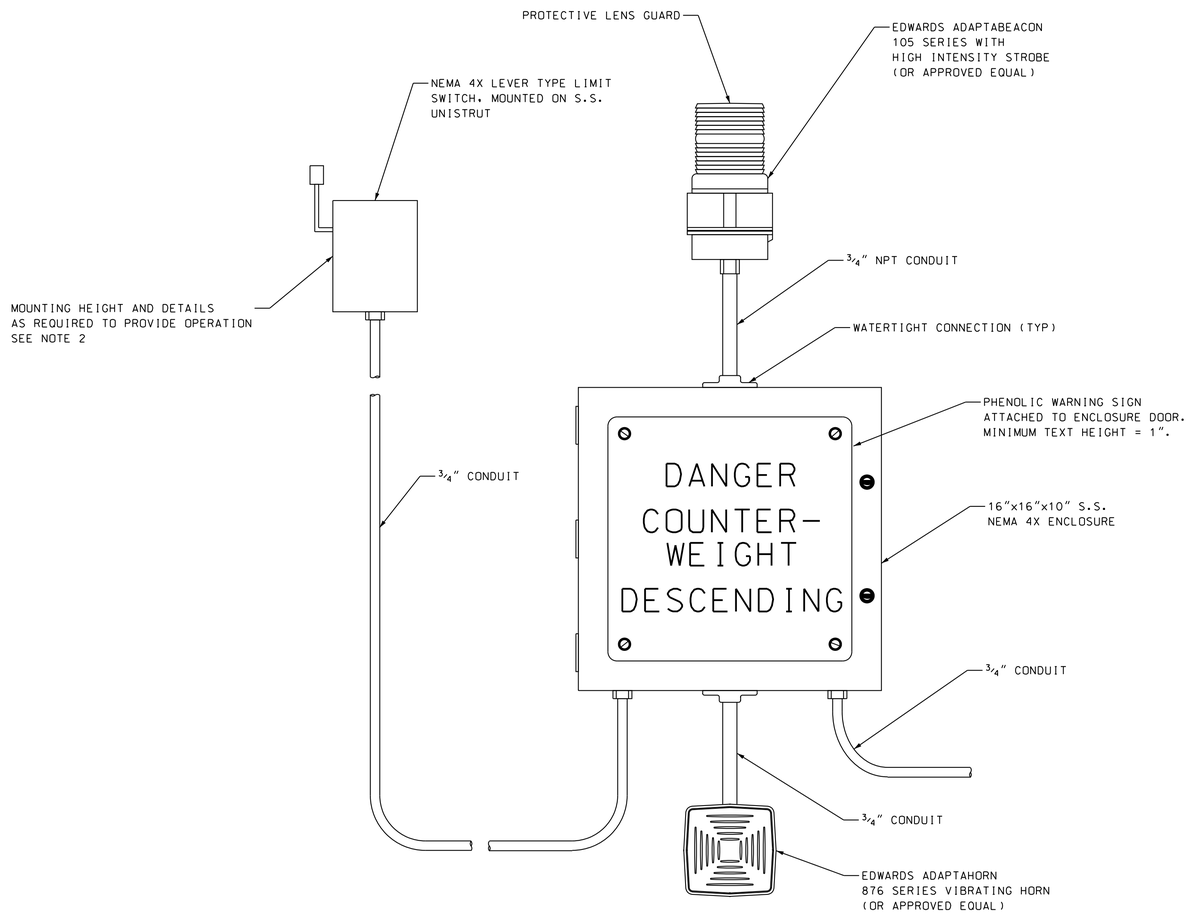

COUNTERWEIGHT WARNING SYSTEM

(FOUR REQUIRED)
NOT TO SCALE

NOTES:

1. THE COUNTERWEIGHT DETECTION SYSTEM SHALL PROVIDE WARNING TO MOTORISTS AND PEDESTRIANS THAT ARE COUNTERWEIGHT IS APPROACHING THE ROADWAY. COUNTERWEIGHT LIMIT SWITCHES SHALL BE LEVER ARM TYPE LIMIT SWITCHES MOUNTED TO THE COUNTERWEIGHT GUIDE. A STAINLESS STEEL ACTUATOR SHALL BE ATTACHED TO THE EAST AND WESR SIDES OF BOTH COUNTERWEIGHT. THE CONTRACTOR SHALL SUBMIT SHOP DRAWINGS FOR REVIEW SHOWING INTENDED ACTUATOR AND LIMIT SWITCH MOUNTING DETAILS. LIMIT SWITCHES SHALL BE MOUNTED SO AS TO ALLOW FIELD ADJUSTABILITY. THE COUNTERWEIGHT LIMIT SWITCHES AND ACTUATORS SHALL BE LOCATED SO THAT THE LIMIT SWITCHES ARE ACTUATED BY THE LEADING EDGE OF THE COUNTERWEIGHT AS IT DESCENDS AND ARE RELEASED WHEN THE COUNTERWEIGHT DETECTION CABINET WHICH SHALL PROVIDE VISIBLE AND AUDIBLE INDICATION THAT THE COUNTERWEIGHT IS NEARING THE ROADWAY. LEVER ARM LIMIT SWITCHES SHALL BE GE MODEL # IC9445 OR APPROVED EQUAL.

2. THE COUNTER WEIGHT LIMIT SWITCHES SHALL BE MOUNTED SO AS TO BE ADJUSTABLE. SWITCHES SHALL ACTIVATE ALARM HORN AND STROBE WHEN ANY PORTION OF THE COUNTERWEIGHT IS WITHIN 15 FEET ABOVE THE ROADWAY OR AS DIRECTED BY THE ENGINEER. ALARM/STROBE SHALL STAY ACTIVE UNTIL ALL PORTIONS OF COUNTERWEIGHT HAVE ASCENDED TO 15 FEET ABOVE THE ROAD UPON BRIDGE CLOSING.

3. EACH COUNTERWEIGHT ALARM SYSTEM (4 TOTAL) SHALL OPERATE INDEPENDENTLY AND WITHOUT CONNECTION TO THE CONTROL SYSTEM.

80% SUBMISSION
JANUARY 18, 2012

ARCHER WESTERN CONTRACTORS

HNTB
HNTB Corporation
The HNTB Companies
Engineers Architects Planners

SUBDIRECTORY	.DGN LOCATOR	SHEET SCALE
Plans	13678F-E46_SafetySys	1" = 50'-0"

STATE OF NEW HAMPSHIRE
DEPARTMENT OF TRANSPORTATION * BUREAU OF BRIDGE DESIGN

TOWN PORTSMOUTH, NH - KITTERY, ME BRIDGE NO. 247/084 STATE PROJECT 13678
LOCATION US ROUTE 1 OVER THE PISCATAQUA RIVER

SAFETY SYSTEM DETAILS

REVISIONS AFTER PROPOSAL			BY	DATE		BY	DATE
		DESIGNED	MCG	11/11	CHECKED	XXX	11/11
		DRAWN	MDC	11/11	CHECKED	DR	11/11
		QUANTITIES	XXX	11/11	CHECKED	XXX	11/11

ISSUE DATE
REV. DATE

FEDERAL PROJECT NO. BHF-T-0101(015)
SHEET NO. XXX

BRIDGE SHEET E46 OF E67
FILE NUMBER XXX-X-X
TOTAL SHEETS XXX

DATE/TIME:1/18/2012 3:35:59 PM USER:astephenson
FILE NAME:s:\FFL_wOOs\CADD\55519_Portsmouth_Rt1_Memorial_Bridges\E1\Plans\13678F-E46_SafetySys.dgn
MODEL NAME:PLAN
LAST SAVE:1/17/2012 4:04:01 PM

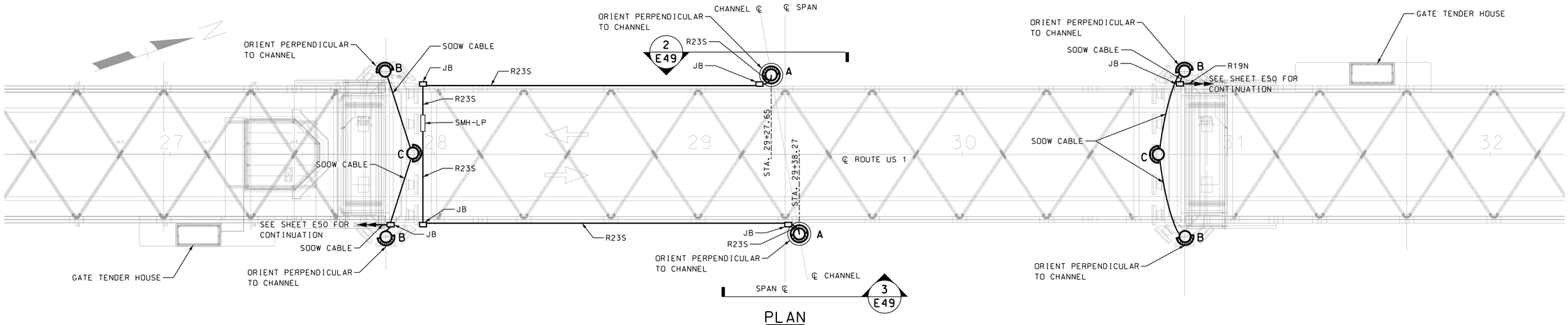

PLAN

SCALE: 1" = 20'-0"

NOTES:

1. ALL LOCATIONS SHOWN ARE APPROXIMATE. THE CONTRACTOR SHALL COORDINATE AND FIELD VERIFY ALL LOCATIONS.
2. SEE BRIDGE SHEET E48 FOR NAVIGATION LIGHT DETAILS.
3. CENTER CHANNEL LIGHT SHALL BE CENTERED ON ℄ OF CHANNEL. NOT MOVABLE SPAN. SEE STATION ON PLAN VIEW.

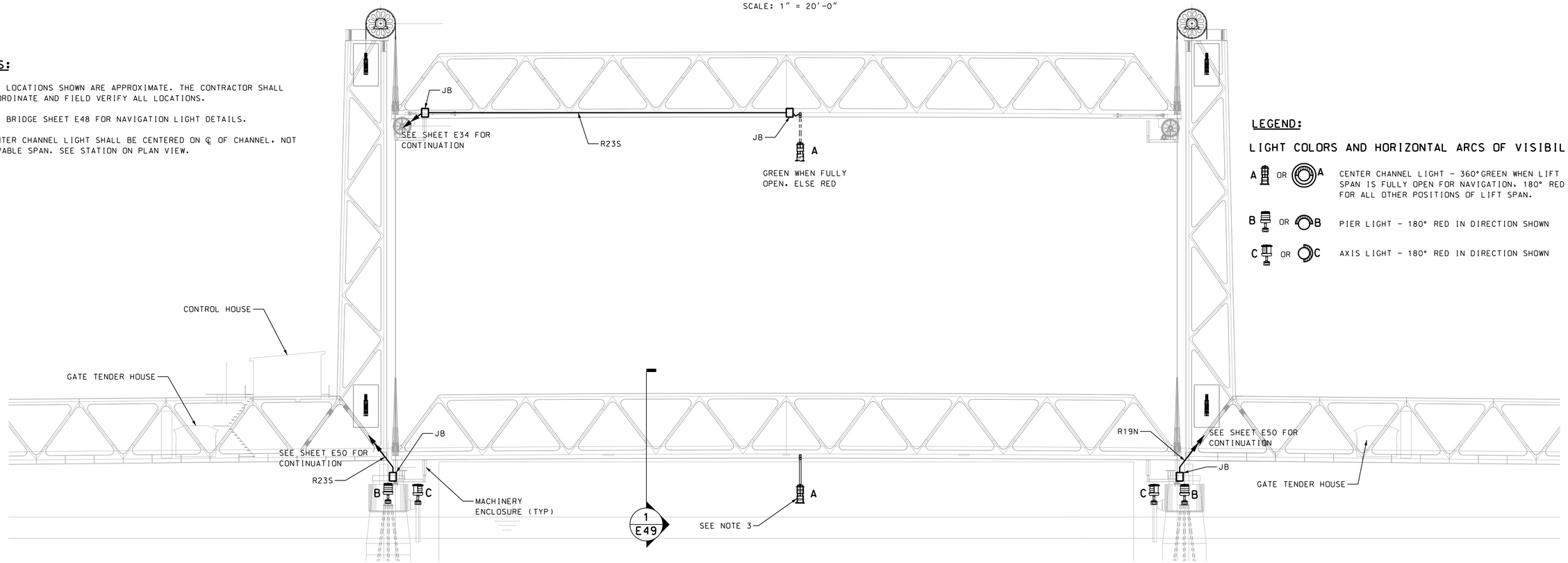

ELEVATION

SCALE: 1" = 20'-0"

LEGEND:

LIGHT COLORS AND HORIZONTAL ARCS OF VISIBILITY

A OR A — CENTER CHANNEL LIGHT - 360°GREEN WHEN LIFT SPAN IS FULLY OPEN FOR NAVIGATION, 180° RED FOR ALL OTHER POSITIONS OF LIFT SPAN.

B OR B — PIER LIGHT - 180° RED IN DIRECTION SHOWN

C OR C — AXIS LIGHT - 180° RED IN DIRECTION SHOWN

80% SUBMISSION
JANUARY 18, 2012

ARCHER WESTERN CONTRACTORS

HNTB
HNTB Corporation
The HNTB Companies
Engineers Architects Planners

SUBDIRECTORY	.DGN LOCATOR	SHEET SCALE
Plans	13678F-E47_Marine	1" = 20'-0"

STATE OF NEW HAMPSHIRE
DEPARTMENT OF TRANSPORTATION * BUREAU OF BRIDGE DESIGN

TOWN PORTSMOUTH, NH - KITTERY, ME BRIDGE NO. 247/084 STATE PROJECT 13678

LOCATION US ROUTE 1 OVER THE PISCATAQUA RIVER

MARINE NAVIGATION LIGHTING PLAN

REVISIONS AFTER PROPOSAL		BY	DATE		BY	DATE
	DESIGNED	MCG	01/12	CHECKED	GP	01/12
	DRAWN	MDC	01/12	CHECKED	DR	01/12
	QUANTITIES	XXX	XX/XX	CHECKED	XXX	XX/XX

ISSUE DATE	FEDERAL PROJECT NO.	SHEET NO.	TOTAL SHEETS
REV. DATE	BHF-T-0101(015)	XXX	XXX

BRIDGE SHEET E47 OF E67

FILE NUMBER XXX-X-X

DATE/TIME: 1/18/2012 3:36:00 PM USER: gstephenson
FILE NAME: s:\PFLW00\CADD\55519_Portsmouth_Rt1_Memorial_Bridge\Elk\Plans\13678F-E47_Marine.dgn
MODEL NAME: Plan
LAST SAVE: 1/18/2012 3:20:01 PM

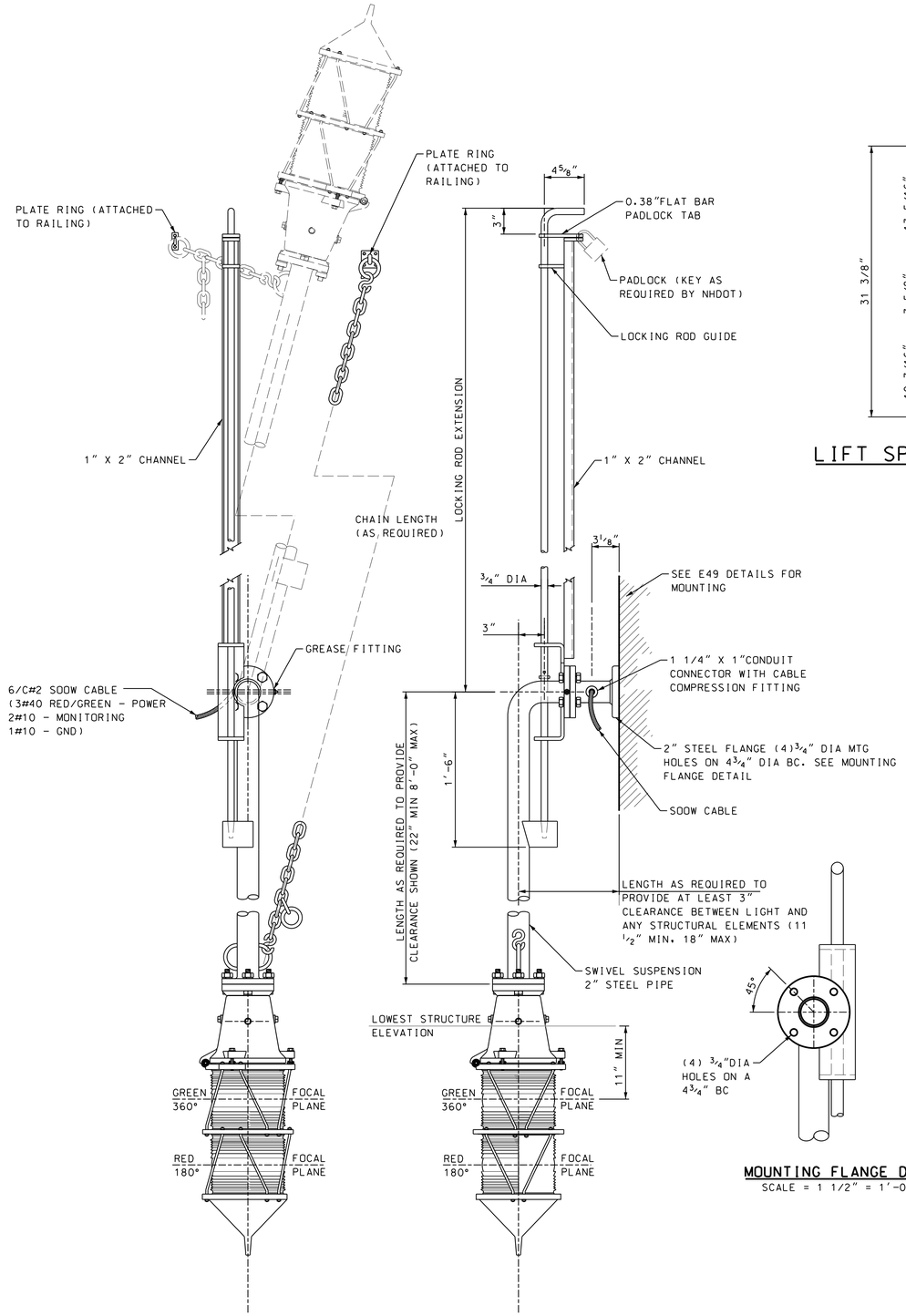

BRIDGE MOUNTED CENTER CHANNEL LIGHT

SCALE = 1 1/2" = 1'-0"

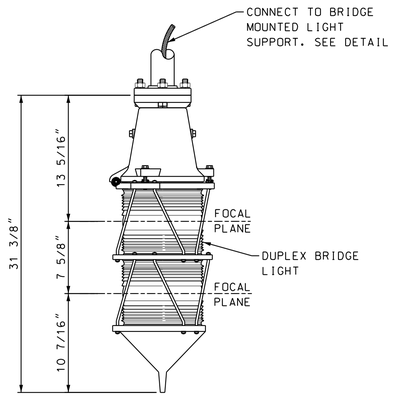

LIFT SPAN CENTER CHANNEL LIGHT

SCALE = 1 1/2" = 1'-0"

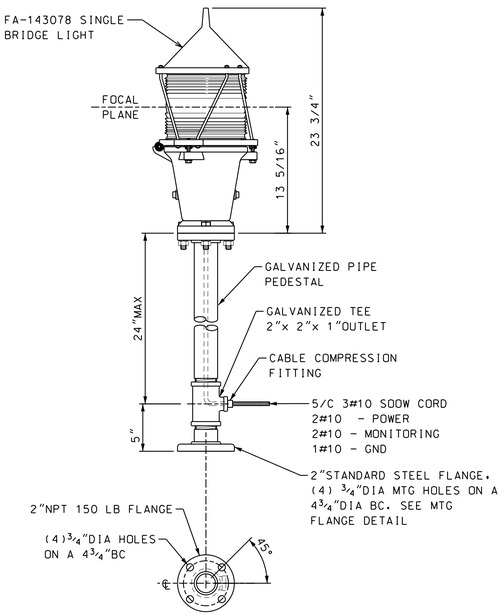

MOUNTING FLANGE DETAIL

FENDER LIGHT / AXIS LIGHT

SCALE = 1 1/2" = 1'-0"

NOTES:

1. BRIDGE-MOUNTED CHANNEL LIGHTING ASSEMBLIES SHALL MEET ALL REQUIREMENTS OF THE UNITED STATES COAST GUARD. MINIMUM REQUIREMENTS SHALL BE AS FOLLOWS:

LENS TYPE:	ONE-PIECE MOLDED GLASS FRESNEL TYPE WITH 180° RED/360° GREEN LENS (LIFT SPAN CENTER CHANNEL) 180° RED (CHANNEL EDGE) 360° GREEN (CENTER CHANNEL)
CONSTRUCTION:	CAST ALUMINUM WITH ALODINE COATING
ILLUMINATION:	LED (10 WATTS MAXIMUM AT 120 VOLTS)
LAMP LIFE:	50,000 HOURS
LED DRIVER:	INTERNALLY MOUNTED
OPTIONS:	INTERNAL SHOCK DAMPENERS FOR INTERNAL ELECTRONIC COMPONENTS CLEAR LEXAN VANDALISM SHIELD
MANUFACTURER:	PHAROS MARINE AUTOMATIC POWER (NO SUBSTITUTIONS)
MODEL:	FA-143078 (SINGLE-LIGHT) OR FA-143081 (DUAL LIGHT) ON FA230-L (SWIVEL SUSPENSION WITH SECURITY LOCK)

2. FENDER-MOUNTED NAVIGATION LIGHTING ASSEMBLIES (FENDER LIGHTS) SHALL MEET ALL REQUIREMENTS OF THE UNITED STATES COAST GUARD. MINIMUM REQUIREMENTS SHALL BE AS FOLLOWS:

LENS TYPE:	ONE-PIECE MOLDED GLASS FRESNEL TYPE WITH 180 DEGREE RED LENS
CONSTRUCTION:	CAST ALUMINUM WITH ALODINE COATING
ILLUMINATION:	LED (10 WATTS MAXIMUM AT 120 VOLTS)
LAMP LIFE:	50,000 HOURS
LED DRIVER:	INTERNALLY MOUNTED
OPTIONS:	INTERNAL SHOCK DAMPENERS FOR INTERNAL ELECTRONIC COMPONENTS CLEAR LEXAN VANDALISM SHIELD
MANUFACTURER:	PHAROS MARINE AUTOMATIC POWER (NO SUBSTITUTIONS)
MODEL:	FA-143078 (FENDER LIGHT) WITH FA-229 PEDESTAL MOUNT

3. ALL COMPONENTS AND MOUNTING HARDWARE SHALL BE HOT-DIPPED GALVANIZED STEEL OR STAINLESS STEEL.

4. PROVIDE ONE SPARE NAVIGATION LIGHTING ASSEMBLY OF EACH TYPE (CENTER CHANNEL AND FENDER MOUNTED). DELIVER ASSEMBLY, ALONG WITH ALL HARDWARE TO THE AUTHORITY AT A LOCATION AS DIRECTED BY THE ENGINEER.

5. DETAILS SHOWN ON THE PLANS HAVE BEEN DEVELOPED FOR THE MAKE AND MANUFACTURER LISTED. IF AN ALTERNATE VENDOR/MODEL IS PROPOSED CONTRACTOR SHALL REVISE ALL NECESSARY DETAILS, INCLUDING STRUCTURAL MOUNTING AND WIRING CONNECTIONS. REVISED DETAILS SHALL BE SUBMITTED WITH SHOP DRAWINGS FOR REVIEW AS A COMPLETE PACKAGE.

80% SUBMISSION
JANUARY 18, 2012

ARCHER WESTERN CONTRACTORS

HNTB
HNTB Corporation
The HNTB Companies
Engineers Architects Planners

SUBDIRECTORY	.DGN LOCATOR	SHEET SCALE
Plans	13678F-E48-51_NavAVLt_Det	1" = 50'-0"

STATE OF NEW HAMPSHIRE
DEPARTMENT OF TRANSPORTATION * BUREAU OF BRIDGE DESIGN

TOWN PORTSMOUTH, NH - KITTERY, ME BRIDGE NO. 247/084 STATE PROJECT 13678

LOCATION US ROUTE 1 OVER THE PISCATAQUA RIVER

MARINE NAVIGATION DETAILS 1

REVISIONS AFTER PROPOSAL		BY	DATE		BY	DATE
	DESIGNED	MCG	01/12	CHECKED	XXX	01/12
	DRAWN	MDC	01/12	CHECKED	DR	01/12
	QUANTITIES	XXX	01/12	CHECKED	XXX	01/12
	ISSUE DATE		FEDERAL PROJECT NO.		SHEET NO.	TOTAL SHEETS
	REV. DATE		BHF-T-0101(015)		E67	XXX

BRIDGE SHEET E48 OF E67

FILE NUMBER XXX-X-X

DATE/TIME: 1/18/2012 3:36:04 PM USER: gstephenson
FILE NAME: c:\PFLWOS\CADD\55519_Portsmouth_R11_Memorial_Bridge\E1\Plans\13678F-E48-51_NavAVLt_Det.dgn
MODEL NAME: Navigation Details
LAST SAVE: 1/18/2012 10:11:20 AM

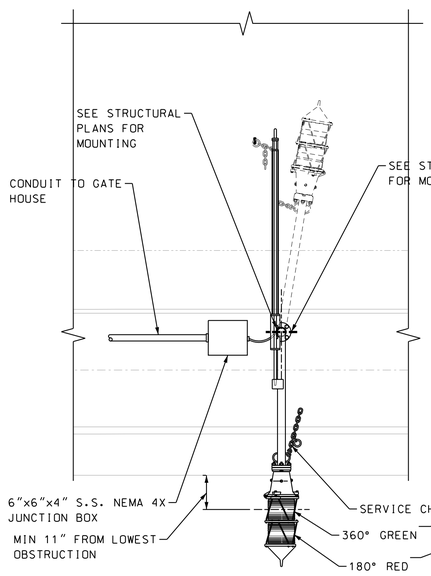

1 / E47 SECTION

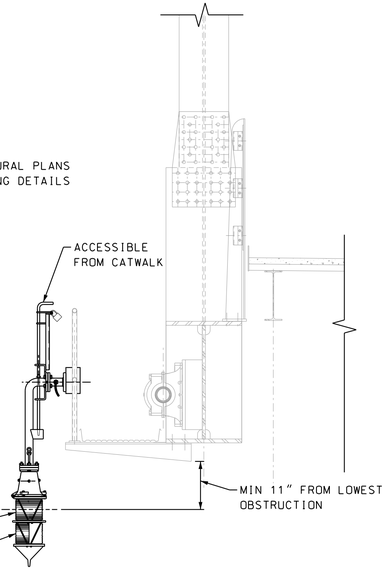

2 / E47 SECTION

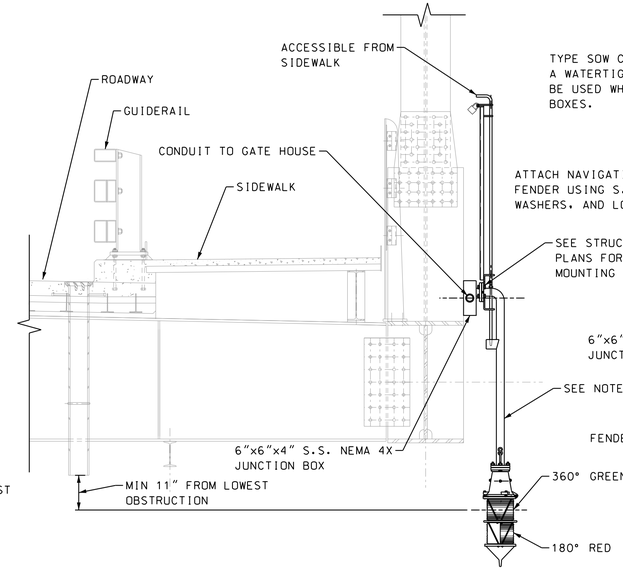

3 / E47 SECTION

CENTER CHANNEL LIGHT (360° GREEN AND 180° RED)

SCALE: 1/2" = 1'-0"

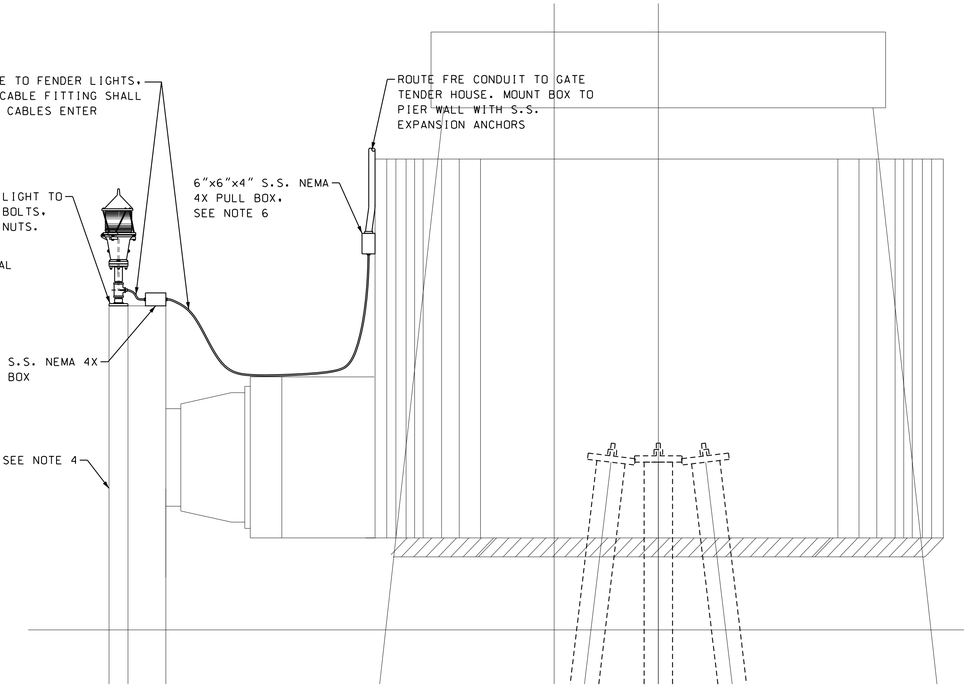

FENDER NAVIGATION LIGHT SECTION VIEW

SCALE: 1/2" = 1'-0"

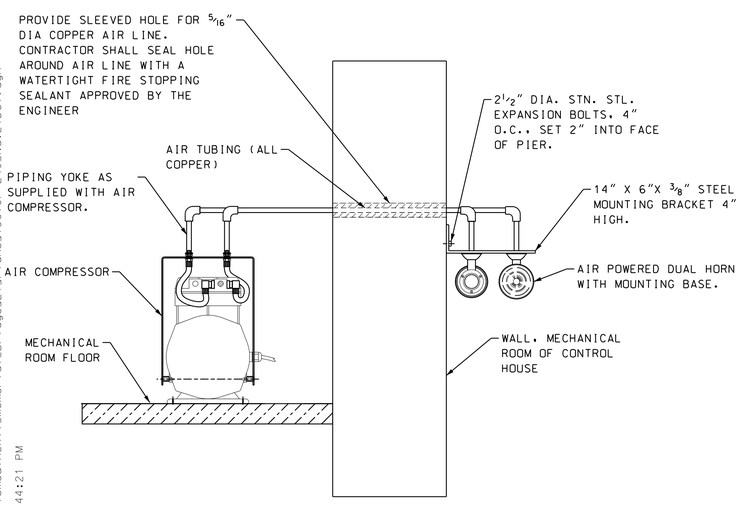

AIR HORN INSTALLATION DETAIL

NOT TO SCALE

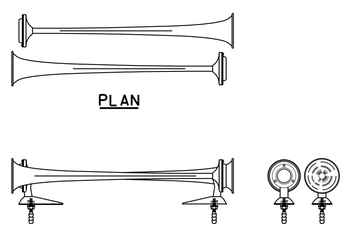

AIR HORN

SCALE: 2" = 1'-0"

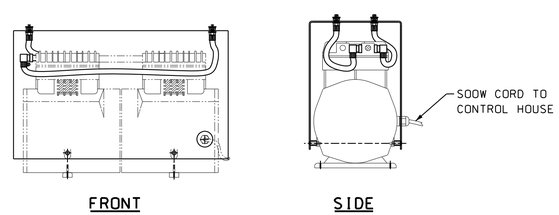

COMPRESSOR

SCALE: 2" = 1'-0"

NOTES:

1. FOR LOCATION OF CHANNEL LIGHT, SEE SHEET E47.
2. CENTER CHANNEL LIGHTS SHALL BE SECURELY MOUNTED JUST BELOW THE LOWEST EDGE OF THE BRIDGE STRUCTURE SO BOTH WILL BE VISIBLE FROM A VESSEL APPROACHING FROM EITHER SIDE. VERIFY STRUCTURAL DETAILS WITH STRUCTURAL PLANS.
3. LENGTH OF THE SUPPORT ARM SHALL BE LONG ENOUGH TO SWING THE CHANNEL LIGHT ABOVE THE RAILING FOR EASE OF MAINTENANCE.
4. SEE STRUCTURE DRAWINGS FOR FENDER TYPE AND MATERIAL.
5. INSTALLATIONS SHALL BE FIELD COORDINATED WITH OTHER DISCIPLINES.
6. PULL BOX SHALL BE SECURELY MOUNTED ON THE PIER AT A SUITABLE LOCATION WHERE IT IS NOT EXPOSED TO POSSIBLE PHYSICAL DAMAGE.
7. CENTER CHANNEL LIGHTS SHALL BE SECURED TO SIDEWALK STRINGERS USING STAINLESS STEEL MACHINE BOLTS, NUTS, AND LOCK WASHERS.

AIR HORN AND COMPRESSOR NOTES:

A1. THE AIR HORN SHALL BE B&B ROADWAY, LLC, MODEL AHR-2 (DUAL PROJECTORS), OR AN APPROVED EQUAL MEETING ALL SPECIFICATIONS DEFINED HEREIN.

A2. THE AIR HORN SHALL BE USED AS AN AURAL SIGNAL TO DRAW ATTENTION TO OPERATION OF THE BRIDGE.

A3. THE PROJECTORS SHALL BE OF STAINLESS STEEL, APPROXIMATELY 16" IN OVERALL LENGTH EACH, AND SHALL FEATURE A DIAPHRAGM DESIGNED FOR HIGH PRESSURE OPERATION AND LOW AIR CONSUMPTION. THE PROJECTORS SHALL BE CAPABLE OF PRODUCING A TONE BETWEEN 260 AND 300 HZ WITH A DECIBEL RATING OF 120DB AT 10 FEET. TONE AND VOLUME SHALL BE FIELD ADJUSTABLE.

A4. THE COMPRESSOR MOTOR SHALL BE 1.5 HP, 120V, 60HZ, EQUIPPED WITH PRE-LUBRICATED AND SEALED BALL BEARINGS. MOTOR SHALL OPERATE EFFICIENTLY OVER A WIDE TEMPERATURE RANGE. COMPRESSOR SHALL BE PISTON TYPE, DIRECT-DRIVE AND OIL-LESS. UNIT SHALL USE A PRESSURIZED RESERVOIR TO ENSURE RAPID AND CONSISTENT RESPONSE.

A5. THE AIR HORN ASSEMBLY SHALL BE DESIGNED FOR HORIZONTAL MOUNTING, REMOTE FROM THE COMPRESSOR UNIT. AIR HORN ASSEMBLY SHALL BE SUITABLE FOR OUTDOOR MOUNTING. THE COMPRESSOR UNIT SHALL BE MOUNTED INSIDE THE CONTROL HOUSE OR OTHER WEATHERPROOF SHELTER.

A6. THE CONTRACTOR SHALL PROVIDE CLAMPS AND ONE LENGTH OF 1/4" TUBING, MINIMUM 200 POUND RATING, TO CONNECT FROM THE PORT AT THE COMPRESSOR UNIT TO THE PORT AT THE SOLENOID VALVE ON THE REMOTE PROJECTOR ASSEMBLY. TUBING SHALL BE TRIMMED TO FIT ON SITE WITH NO EXCESS LENGTH OR LOOPS.

A7. CONTRACTOR SHALL PROVIDE A PUSHBUTTON OR SIMILAR CONTROL DEVICE AT THE CONTROL HOUSE FOR OPERATION OF THE AIR HORN. RELAYS FOR ACTIVATION OF AIRHORN SHALL BE LOCATED IN THE CONTROL CONSOLE.

80% SUBMISSION
JANUARY 18, 2012

ARCHER WESTERN CONTRACTORS

HNTB
HNTB Corporation
The HNTB Companies
Engineers Architects Planners

SUBDIRECTORY	.DGN LOCATOR	SHEET SCALE
Plans	13678F-E49_NavLtDet	1" = 50'-0"

STATE OF NEW HAMPSHIRE
DEPARTMENT OF TRANSPORTATION * BUREAU OF BRIDGE DESIGN

TOWN PORTSMOUTH, NH - KITTERY, ME | BRIDGE NO. 247/084 | STATE PROJECT 13678
LOCATION US ROUTE 1 OVER THE PISCATAQUA RIVER

MARINE NAVIGATION DETAILS - 2

REVISIONS AFTER PROPOSAL	BY	DATE		BY	DATE
DESIGNED	MCG	01/12	CHECKED	XXX	01/12
DRAWN	GS	01/12	CHECKED	DR	01/12
QUANTITIES	XXX	XXX	CHECKED	XXX	XXX

ISSUE DATE
REV. DATE
FEDERAL PROJECT NO. BHF-T-0101(015)
SHEET NO.

BRIDGE SHEET E49 OF E67
FILE NUMBER XXX-X-X
TOTAL SHEETS XXX

DATE/TIME: 1/18/2012 3:44:39 PM USER: gstephenson
FILE NAME: U:\55519_Portsmouth_R11_Memorial_BrTdge\E1\Plans\13678F-E49_NavLtDet.dgn
MODEL NAME: Plan
LAST SAVE: 1/18/2012 3:44:21 PM

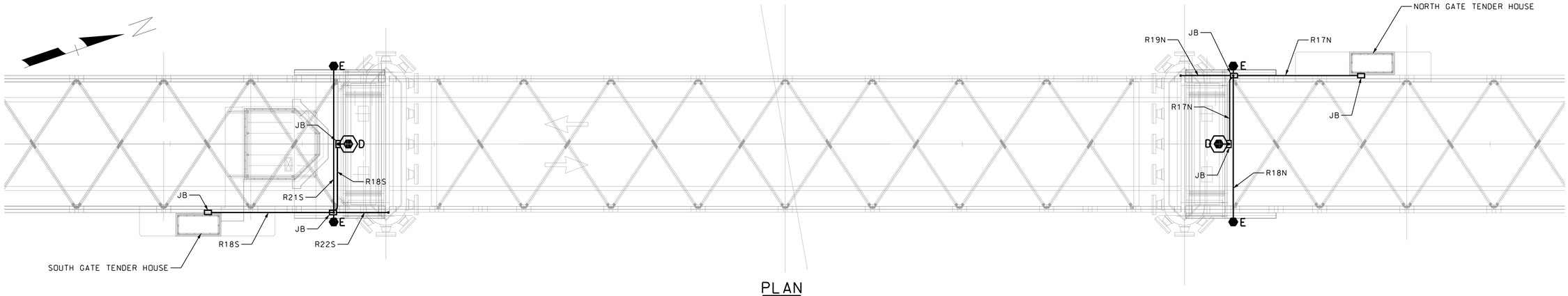

PLAN

SCALE: 1" = 20'-0"

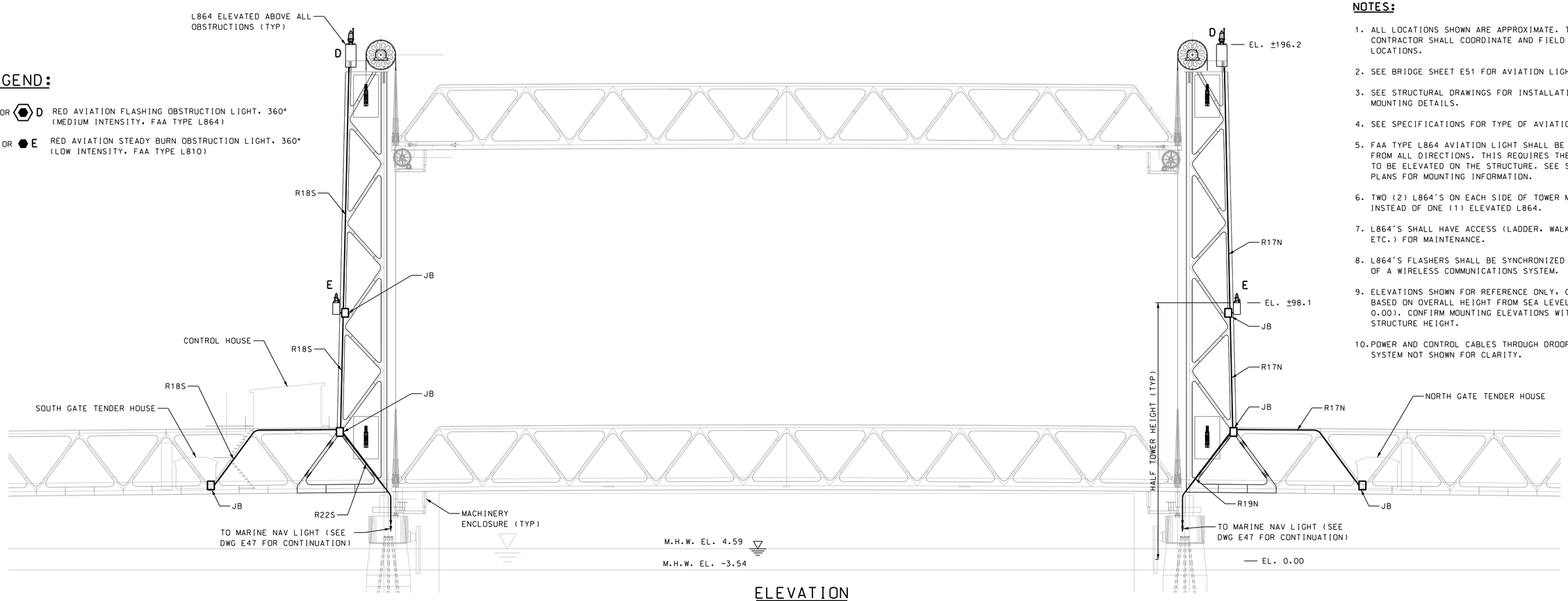

ELEVATION

SCALE: 1" = 20'-0"

LEGEND:

D OR D — RED AVIATION FLASHING OBSTRUCTION LIGHT, 360° (MEDIUM INTENSITY, FAA TYPE L864)

E OR E — RED AVIATION STEADY BURN OBSTRUCTION LIGHT, 360° (LOW INTENSITY, FAA TYPE L810)

NOTES:

1. ALL LOCATIONS SHOWN ARE APPROXIMATE. THE CONTRACTOR SHALL COORDINATE AND FIELD VERIFY ALL LOCATIONS.
2. SEE BRIDGE SHEET E51 FOR AVIATION LIGHT DETAILS.
3. SEE STRUCTURAL DRAWINGS FOR INSTALLATION AND MOUNTING DETAILS.
4. SEE SPECIFICATIONS FOR TYPE OF AVIATION BEACONS.
5. FAA TYPE L864 AVIATION LIGHT SHALL BE VISIBLE FROM ALL DIRECTIONS. THIS REQUIRES THE FIXTURE TO BE ELEVATED ON THE STRUCTURE. SEE STRUCTURAL PLANS FOR MOUNTING INFORMATION.
6. TWO (2) L864'S ON EACH SIDE OF TOWER MAY BE USED INSTEAD OF ONE (1) ELEVATED L864.
7. L864'S SHALL HAVE ACCESS (LADDER, WALKWAY, ETC.) FOR MAINTENANCE.
8. L864'S FLASHERS SHALL BE SYNCHRONIZED BY MEANS OF A WIRELESS COMMUNICATIONS SYSTEM.
9. ELEVATIONS SHOWN FOR REFERENCE ONLY, COMPUTED BASED ON OVERALL HEIGHT FROM SEA LEVEL (EL. 0.00). CONFIRM MOUNTING ELEVATIONS WITH FINAL STRUCTURE HEIGHT.
10. POWER AND CONTROL CABLES THROUGH DROOP CABLE SYSTEM NOT SHOWN FOR CLARITY.

80% SUBMISSION
JANUARY 18, 2012

ARCHER WESTERN CONTRACTORS

HNTB
HNTB Corporation
The HNTB Companies
Engineers Architects Planners

SUBDIRECTORY	.DGN LOCATOR	SHEET SCALE
Plans	13678F-E50_Aviatn	1" = 20'-0"

STATE OF NEW HAMPSHIRE
DEPARTMENT OF TRANSPORTATION * BUREAU OF BRIDGE DESIGN

TOWN PORTSMOUTH, NH - KITTERY, ME — BRIDGE NO. 247/084 — STATE PROJECT 13678

LOCATION US ROUTE 1 OVER THE PISCATAQUA RIVER

AVIATION OBSTRUCTION LIGHTING PLAN

REVISIONS AFTER PROPOSAL		BY	DATE		BY	DATE
	DESIGNED	MCG	01/12	CHECKED	GP	01/12
	DRAWN	MDC	01/12	CHECKED	DR	01/12
	QUANTITIES	XXX	XX/XX	CHECKED	XXX	XX/XX

ISSUE DATE	FEDERAL PROJECT NO.	SHEET NO.	TOTAL SHEETS
REV. DATE	BHF-T-0101(015)	XXX	XXX

BRIDGE SHEET: E50 OF E67
FILE NUMBER: XXX-X-X

DATE/TIME: 1/18/2012 3:36:07 PM USER: gstephenson
FILE NAME: s:\FFLw00\CADD\55519_Portsmouth_R1_Memorial_Bridge\E1\Plans\13678F-E50_Aviatn.dgn
MODEL NAME: Plan
LAST SAVE: 1/18/2012 8:58:46 AM

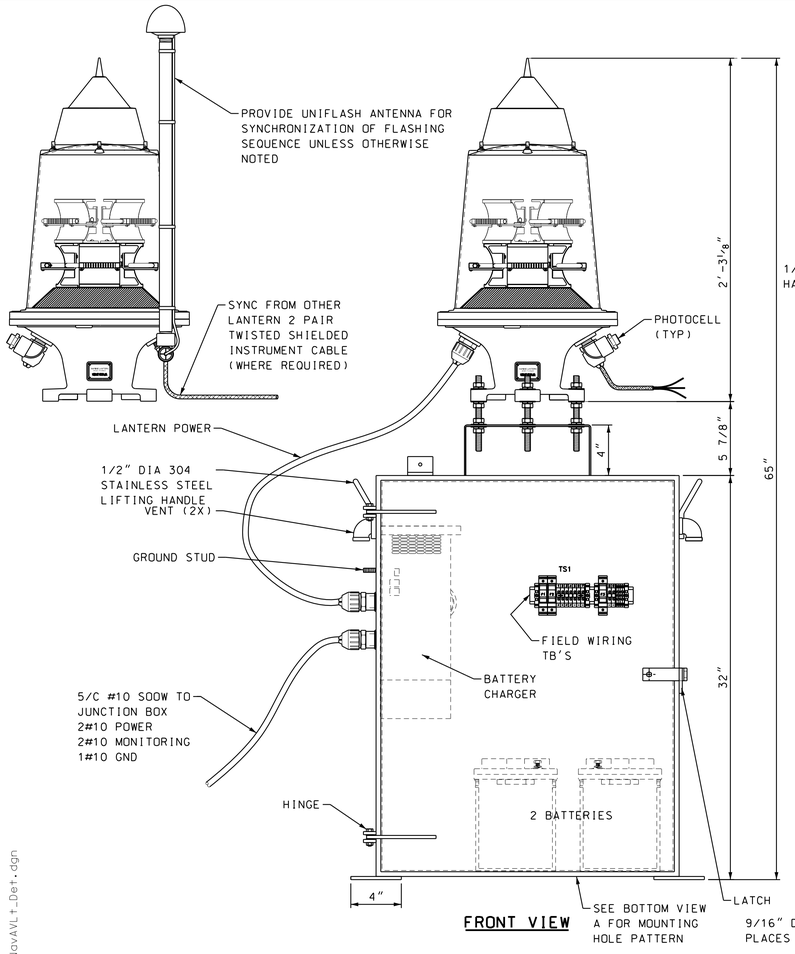

FRONT VIEW

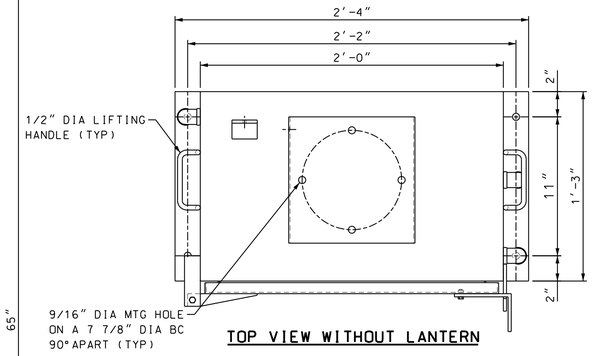

TOP VIEW WITHOUT LANTERN

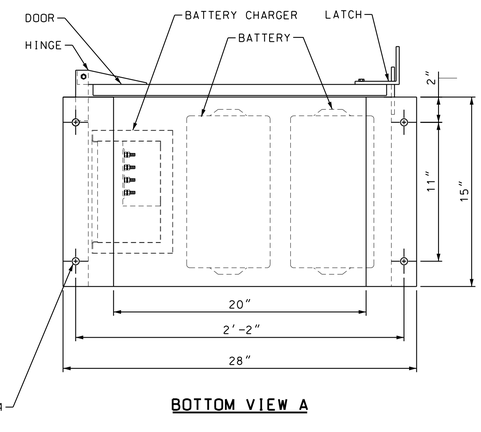

BOTTOM VIEW A

AVIATION FLASHING OBSTRUCTION LIGHT (L-864)

SCALE: 2" = 1'-0"

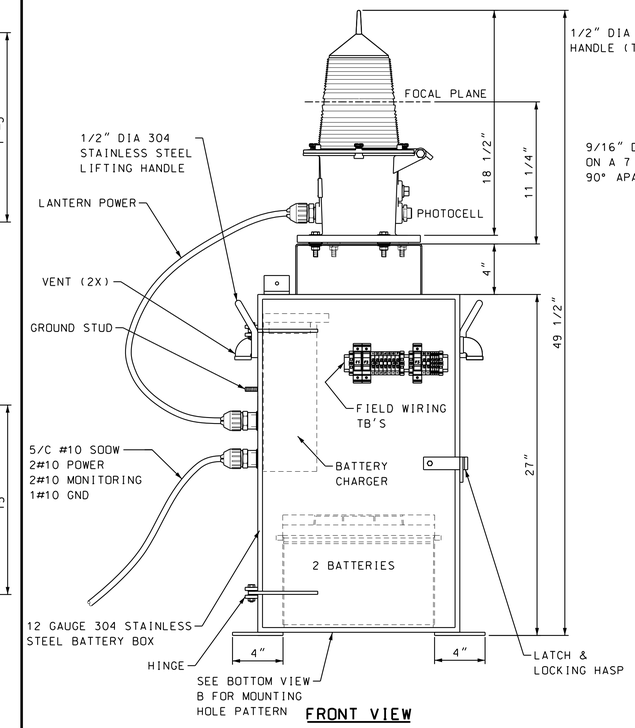

FRONT VIEW

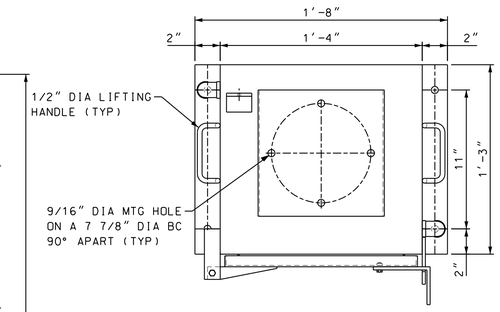

TOP VIEW WITHOUT LANTERN

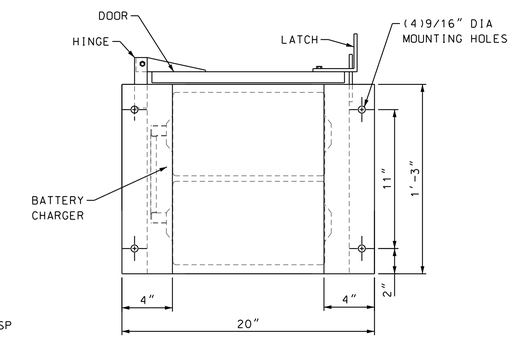

BOTTOM VIEW B

AVIATION STEADY BURN OBSTRUCTION LIGHT (L-810)

SCALE: 2" = 1'-0"

NOTES:

1. L-864 AVIATION BEACON SHALL MEET ALL REQUIREMENTS OF THE FEDERAL AVIATION ADMINISTRATION. MINIMUM REQUIREMENTS SHALL BE AS FOLLOWS:

LENS TYPE:	HIGH-TEMPERATURE UV-STABILIZED CLEAR ACRYLIC
OPTIC:	STAINLESS PARABOLIC WITH SPECTRAL METAL COATING
BEAM:	360 DEGREES (HORIZ.). 3 DEGREES (VERT.)
FLASH RHYTHM:	20 FLASHES PER MINUTE (1 SEC. ON. 2 SEC. OFF)
BASE:	CAST ALUMINUM WITH ALODINE COATING
REFLECTOR:	STAINLESS STEEL WITH ANODIZED HOUSING
ILLUMINATION:	RED LED. 2000 CANDELA
LAMP LIFE:	50,000 HOURS
POWER SUPPLY:	120 VAC TO 24 VDC (100 WATTS MAXIMUM PER BEACON)
FLASHER:	INTERNALLY MOUNTED
BATTERY:	(2) 120 AMP-HOURS. 12 VOLTS
FAA LISTED:	L-864
MANUFACTURER:	PHAROS MARINE AUTOMATIC POWER (NO SUBSTITUTIONS)
MODEL:	FA-250 LED L-864 (AVIATION BEACON) WITH TR8-24 (POWER SUPPLY) PT24-13 (BATTERY CHARGER) AND APB-1295 (BATTERIES)
NOTIFICATION:	CONTACT CLOSURE WHEN ANY LED DRIVER OR COMPONENT FAILS

2. L-810 AVIATION BEACON SHALL MEET ALL REQUIREMENTS OF THE FEDERAL AVIATION ADMINISTRATION. MINIMUM REQUIREMENTS SHALL BE AS FOLLOWS:

LENS TYPE:	155MM AVIATION CLEAR. ACRYLIC FRESNEL LENS
LAMP:	COMPACT HIGH FLUX 3X4 RED LED ARRAY
BEAM:	360° HORIZONTAL. UNIFORM WITHIN 15%
AIMING:	CENTER OF VERTICAL BEAM IS +10°
BASE:	CAST ALUMINUM WITH ALODINE COATING
ILLUMINATION:	NOT LESS THAN 32.5 CANDELA (PEAK) AND 15 CANDELA AT +/- 5° AT 10.5V FOR 2.4W OF INPUT POWER

NOTES CONTINUED:

LAMP LIFE:	100000 HOURS
POWER SUPPLY:	12. 18. OR 24 VAC. 12/24V BATTERY CHARGER/BATTERY BANK
BATTERY:	(2) 120 AMP HOURS. 12V
FAA LISTED:	L-810
MANUFACTURER:	PHAROS MARINE AUTOMATIC POWER
MODEL:	OB-249-LED (BEACON) WITH TR8-24 (POWER SUPPLY) PT24-13 (BATTERY CHARGER AND APB-1295 (BATTERIES)

3. PROVIDE RELAYS/COMPONENTS WITHIN BATTERY BOX TO PROVIDE CONTACT CLOSURE FOR BEACON FAILURE. CONNECT TO PLC SYSTEM FOR ALARM FUNCTION.

4. ALL COMPONENTS AND MOUNTING HARDWARE SHALL BE HOT-DIPPED GALVANIZED STEEL OR STAINLESS STEEL.

5. PROVIDE ONE SPARE L-810 AND ONE SPARE L-864 AVIATION BEACON WITH POWER SUPPLY. DELIVER ITEMS ALONG WITH ALL HARDWARE TO THE AUTHORITY AT A LOCATION AS DIRECTED BY THE ENGINEER.

6. UNLESS OTHERWISE NOTED. REMOVE ALL PORTIONS OF THE EXISTING AVIATION LIGHTING SYSTEM (WORK NOT SHOWN FOR CLARITY).

7. DETAILS SHOWN ON THE PLANS HAVE BEEN DEVELOPED FOR THE MAKE AND MANUFACTURER LISTED. IF AN ALTERNATE VENDOR/MODEL IS PROPOSED. THE CONTRACTOR SHALL REVISE ALL NECESSARY DETAILS. INCLUDING STRUCTURAL MOUNTING AND WIRING CONNECTIONS. REVISED DETAILS SHALL BE SUBMITTED WITH SHOP DRAWINGS FOR REVIEW AS A COMPLETE PACKAGE.

80% SUBMISSION
JANUARY 18, 2012

ARCHER WESTERN CONTRACTORS

HNTB
HNTB Corporation
The HNTB Companies
Engineers Architects Planners

SUBDIRECTORY	.DGN LOCATOR	SHEET SCALE
Plans	13678F-E48-51_NavAVLt_Det	1" = 50'-0"

STATE OF NEW HAMPSHIRE
DEPARTMENT OF TRANSPORTATION * BUREAU OF BRIDGE DESIGN

TOWN PORTSMOUTH, NH - KITTERY, ME | BRIDGE NO. 247/084 | STATE PROJECT 13678

LOCATION US ROUTE 1 OVER THE PISCATAQUA RIVER

AVIATION OBSTRUCTION DETAILS

REVISIONS AFTER PROPOSAL		BY	DATE		BY	DATE
	DESIGNED	MCG	01/12	CHECKED	XXX	01/12
	DRAWN	MDC	01/12	CHECKED	DR	01/12
	QUANTITIES	XXX	XXX	CHECKED	XXX	XXX

ISSUE DATE		FEDERAL PROJECT NO.	SHEET NO.	TOTAL SHEETS
REV. DATE		BHF-T-0101(015)	E67	XXX

BRIDGE SHEET E51 OF E67
FILE NUMBER XXX-X-X

DATE/TIME:1/18/2012 3:36:03 PM USER:gstephenson
FILE NAME:ssFFLW00$CADD$55519_Portsmouth_R11_Memorial_Bridge$Plans$13678F-E48-51_NavAVLt_Det.dgn
MODEL NAME:Aviation Details
LAST SAVE:1/18/2012 10:11:20 AM

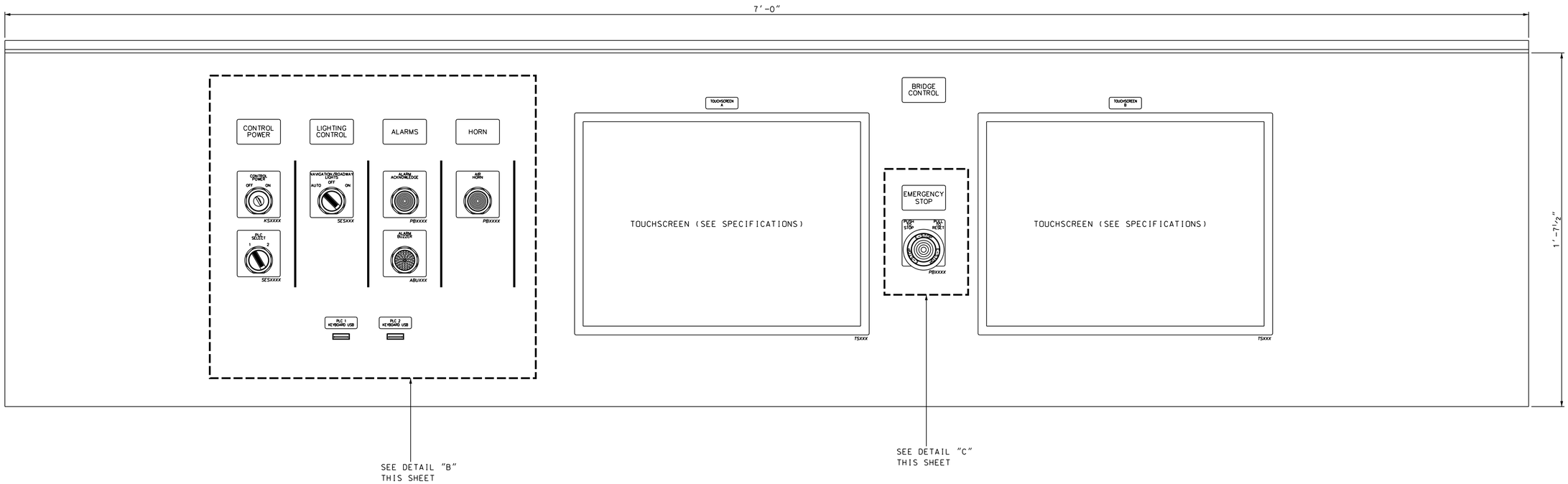

MAIN CONTROL CONSOLE LAYOUT

SCALE: 4" = 1'-0"

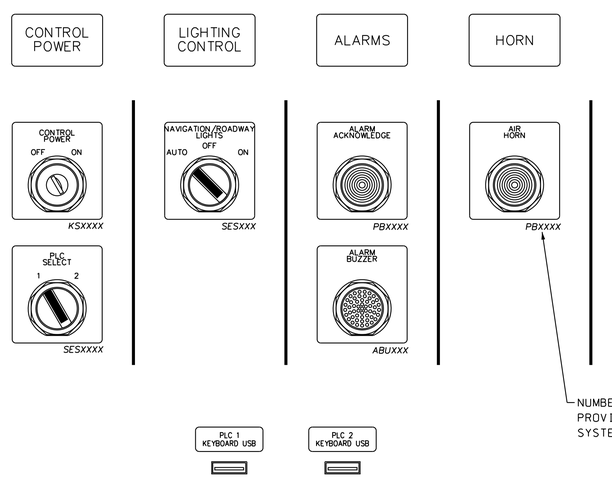

DETAIL "B"

SCALE: 6" = 1'-0"

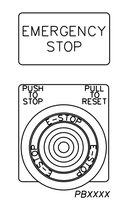

DETAIL "C"

SCALE: 6" = 1'-0"

NOTES:

1. ALL CONSOLE NAMEPLATES SHALL BE PHENOLIC TYPE WITH BLACK LETTERING ON WHITE BACKGROUND. NAMEPLATES SHALL BE ATTACHED TO THE DESK USING SS SCREWS OR RIVETS. OR AS AN INTEGRAL PART OF THE INDICATOR/BUTTON ASSEMBLY. SEE SPECIFICATIONS FOR MORE INFORMATION.

2. MOTOR SELECTED SHALL BE DISPLAYED ON THE TOUCHSCREEN DISPLAYS.

80% SUBMISSION
JANUARY 18, 2012

ARCHER WESTERN CONTRACTORS

HNTB
HNTB Corporation
The HNTB Companies
Engineers Architects Planners

SUBDIRECTORY	.DGN LOCATOR	SHEET SCALE
Plans	13678F-E52_CC	AS SHOWN

STATE OF NEW HAMPSHIRE
DEPARTMENT OF TRANSPORTATION * BUREAU OF BRIDGE DESIGN

TOWN PORTSMOUTH, NH - KITTERY, ME BRIDGE NO. 247/084 STATE PROJECT 13678

LOCATION US ROUTE 1 OVER THE PISCATAQUA RIVER

MAIN CONTROL CONSOLE LAYOUT

REVISIONS AFTER PROPOSAL			BY	DATE		BY	DATE
		DESIGNED	MCG	01/12	CHECKED	GP	01/12
		DRAWN	GS	01/12	CHECKED	DR	01/12
		QUANTITIES	XXX	XX/XX	CHECKED	XXX	XX/XX

ISSUE DATE	FEDERAL PROJECT NO.	SHEET NO.
REV. DATE	BHF-T-0101(015)	

BRIDGE SHEET: E52 OF E67
FILE NUMBER: XXX-X-X
TOTAL SHEETS: XXX

DATE/TIME:1/18/2012 3:36:09 PM USER:gstephenson
FILE NAME:s:\FLW00\CADD\55519_Portsmouth_Rt1_Memorial_Bridges\Plans\13678F-E52_CC.dgn
MODEL NAME:PLAN 1
LAST SAVE:1/18/2012 2:43:29 PM

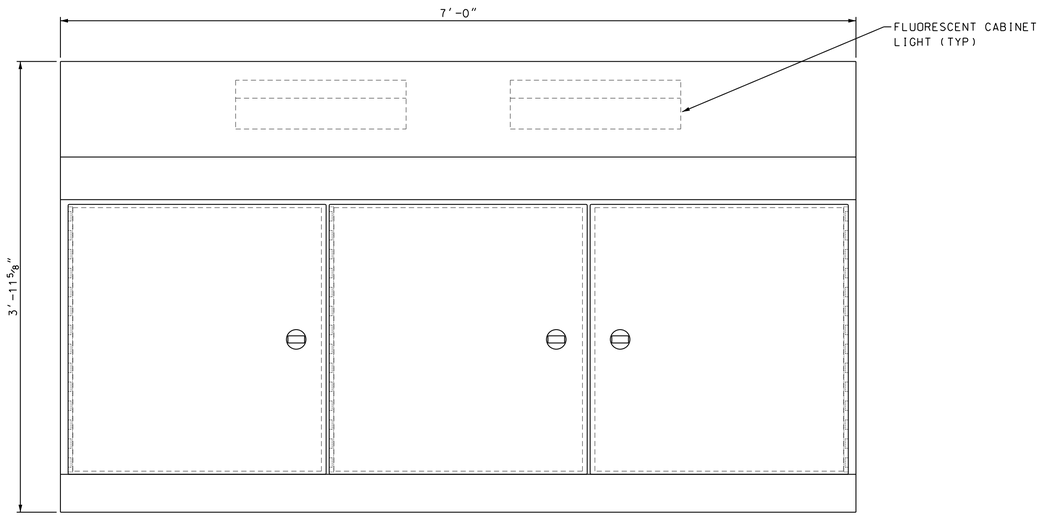

MAIN CONTROL CONSOLE FRONT ELEVATION

SCALE: 1 1/2" = 1'-0"

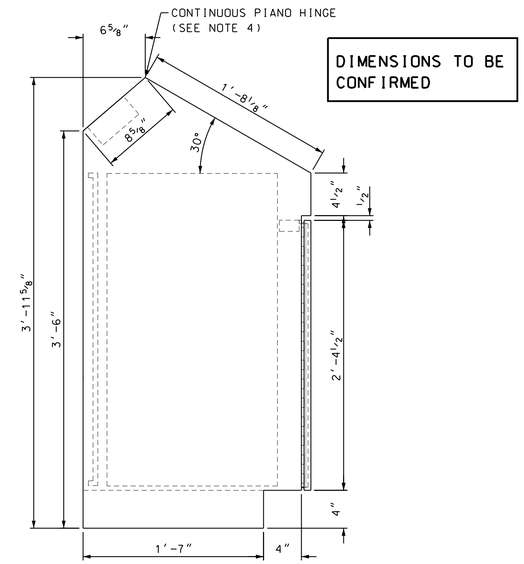

DIMENSIONS TO BE CONFIRMED

MAIN CONTROL CONSOLE LEFT ELEVATION

SCALE: 1 1/2" = 1'-0"

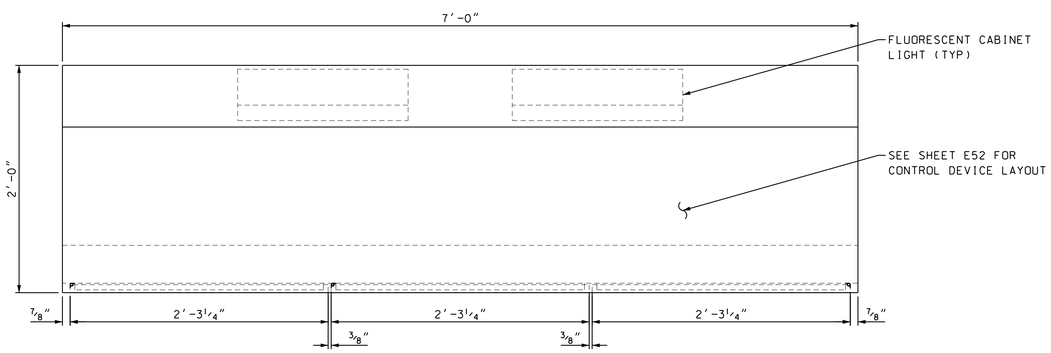

MAIN CONTROL CONSOLE PLAN VIEW

SCALE: 1 1/2" = 1'-0"

NOTES:

1. ONE MAIN CONTROL CONSOLE AND ONE ALARM CONSOLE SHALL BE PROVIDED AND INSTALLED. THESE SHALL BE LOCATED IN THE CONTROL HOUSE.
2. CONSOLES SHALL BE 11 GAUGE, 304 STAINLESS STEEL, NEMA 3R, ALL WELDS.
3. ALL EQUIPMENT SHALL HAVE A NUMBER 4 SATIN FINISH.
4. DOORS SHALL BE HINGED WITH TURNED BACK EDGES AND ADDITIONAL BRACING FOR RIGIDITY. HINGES SHALL BE STAINLESS STEEL CONTINUOUS PIANO HINGE WELDED TO CABINET. DOOR LATCHES SHALL BE LOCKABLE 3 POINT LATCHING SYSTEM. DOOR HANDLE SHALL BE SOUTHCO TYPE OR APPROVED EQUAL.
5. A BOTTOM GASKET OF 1/8" MINIMUM HARD NEOPRENE SHALL BE INSTALLED BETWEEN CONCRETE FLOOR AND BOTTOM FLANGE OF ALL FLOOR MOUNTED CONTROL ENCLOSURES. RACEWAYS SHALL ENTER FLOOR MOUNTED ENCLOSURES THROUGH THE BOTTOM OF THE ENCLOSURE.
6. INTERNAL ILLUMINATION SHALL BE PROVIDED IN ALL PANELS AND ENCLOSURES USING 18" FLUORESCENT STRIP FIXTURES. LIGHTS SHALL BE ACTIVATED BY CONSOLE DOOR SWITCH.
7. APPROPRIATE COOLING SHALL BE PROVIDED FOR ALL ITEMS INSTALLED WITHIN THE ENCLOSURES.
8. LIGHTS AND RECEPTACLES SHALL USE UTILITY POWER OF 120 VAC.
9. ALL LEGEND PLATES SHALL BE CUSTOM MADE AND SHALL BE MADE OF A HOT-POLISHED, LAMINATED PHENOLIC COMPOUND NOT LESS THAT 3/16" THICK. THE COMPOUND SHALL HAVE A WHITE SURFACE 1/32" THICK, AND INTERMEDIATE BLACK LAYER 1/32" THICK AND A WHITE BACK 1/8" THICK. ALL CORNERS SHALL BE ROUNDED, AND THE EDGES OF THE PLATES SHALL BE CHAMFERED. ALL ENGRAVING SHALL BE UPPER CASE, STANDARD GOTHIC CHARACTERS, CUT THROUGH THE SURFACE INTO THE INTERMEDIATE LAYER TO SHOW BLACK LETTERS ON A WHITE BACKGROUND. ALL CONTROL DEVICE LEGEND INFORMATION SHALL BE PROVIDED ON THE CUSTOM LEGEND PLATES. NO LEGENDS SHALL BE PUT ON PILOT LIGHT LENSES.
10. NUTS SHALL BE WELDED TO THE INTERIOR OF THE CABINET TO AVOID REMOVAL OF BACKPANELS AND EQUIPMENT DURING FIELD INSTALLATION.
11. ALL MOUNTING SCREWS AND BOLTS SHALL BE STAINLESS STEEL.
12. CONSOLES SHALL HAVE CONTINUOUS NEOPRENE GASKETING AROUND ALL OPENINGS.
13. CONSOLES SHALL HAVE CONTINUOUS PIANO TYPE HINGE BETWEEN THE DESK TOP PANELS AND BASE.
14. CONSOLE DESK TOP PANELS SHALL HAVE A 1-INCH RETURN LIP ON THE 3 SIDES EXCEPT WHERE HINGED.
15. ALL CORNERS SHALL BE WELDED AND GROUND TO A SMOOTH ROUND FINISH.
16. POCKETS (MINIMUM SIZE 8.5" x 11") SHALL BE PROVIDED ON THE INSIDE OF THE CABINET DOORS TO HOLD INSTRUCTION MANUALS AND DRAWINGS.
17. MAIN CONTROL CONSOLE DESKTOP SHALL BE HINGED SO THAT IT OPENS UPWARD AND BACKWARD. GAS SPRINGS AND HARDWARE SHALL BE SUPPLIED TO SAFELY LOCK THE CONSOLE TOP IN THE OPEN POSITION FOR SERVICING. QUARTER TURN LATCHES SHALL BE PROVIDED TO SECURE CONSOLE TOP TO CABINET.
18. EQUIPMENT TO BE INSTALLED IN THESE CONSOLES IS NOT SHOWN FOR CLARITY OF CONSOLE CONSTRUCTION.
19. THE BOTTOM OF THE MAIN CONTROL CONSOLE SHALL BE OPEN TO FACILITATE CONDUIT ENTRY FROM BELOW THE CONTROL CONSOLE.
20. THOUGH NOT SHOWN IN THESE DRAWINGS, ELECTRICAL COMPONENTS TO BE INSTALLED WITHIN THE MAIN CONTROL AND ALARM CONSOLES SHALL INCLUDE, BUT NOT BE LIMITED TO: CONTROL RELAYS, REMOTE I/O, COMMUNICATIONS EQUIPMENT, INDUSTRIAL TOUCH-SCREEN PC/DISPLAY, PLCS, TERMINAL STRIPS, WIREWAYS, CONVENIENCE OUTLET, CABINET LIGHTING, FANS, AND CABINET HEATER. THE CONTROL SYSTEM VENDOR SHALL BE RESPONSIBLE FOR ARRANGING AND OPTIMIZING THE LAYOUT OF ALL APPROVED COMPONENTS IN THE MOST EFFICIENT AND PRACTICAL MANNER. THE LAYOUT OF COMPONENTS SHALL BE SUBMITTED FOR APPROVAL TO THE ENGINEER PRIOR TO FABRICATION.

80% SUBMISSION
JANUARY 18, 2012

ARCHER WESTERN CONTRACTORS

HNTB
HNTB Corporation
The HNTB Companies
Engineers Architects Planners

SUBDIRECTORY	.DGN LOCATOR	SHEET SCALE
Plans	13678F-E53_CCcab	AS SHOWN

STATE OF NEW HAMPSHIRE
DEPARTMENT OF TRANSPORTATION * BUREAU OF BRIDGE DESIGN

TOWN PORTSMOUTH, NH - KITTERY, ME BRIDGE NO. 247/084 STATE PROJECT 13678
LOCATION US ROUTE 1 OVER THE PISCATAQUA RIVER

MAIN CONTROL CONSOLE DETAILS

REVISIONS AFTER PROPOSAL	BY	DATE		BY	DATE
DESIGNED	MCG	01/12	CHECKED	GP	01/12
DRAWN	GS	01/12	CHECKED	DR	01/12
QUANTITIES	XXX	XX/XX	CHECKED	XXX	XX/XX

ISSUE DATE	FEDERAL PROJECT NO.	SHEET NO.	TOTAL SHEETS
REV. DATE	BHF-T-0101(015)	XXX	XXX

BRIDGE SHEET E53 OF E67
FILE NUMBER XXX-X-X

DATE/TIME:1/18/2012 3:36:10 PM USER:gstephenson
FILE NAME:s:\FFLwOO\CADD\55519_Portsmouth_Rt1_Memorial_Bridge\E1\Plans\13678F-E53_CCcab.dgn
MODEL NAME:PLAN 1
LAST SAVE:1/18/2012 3:03:53 PM

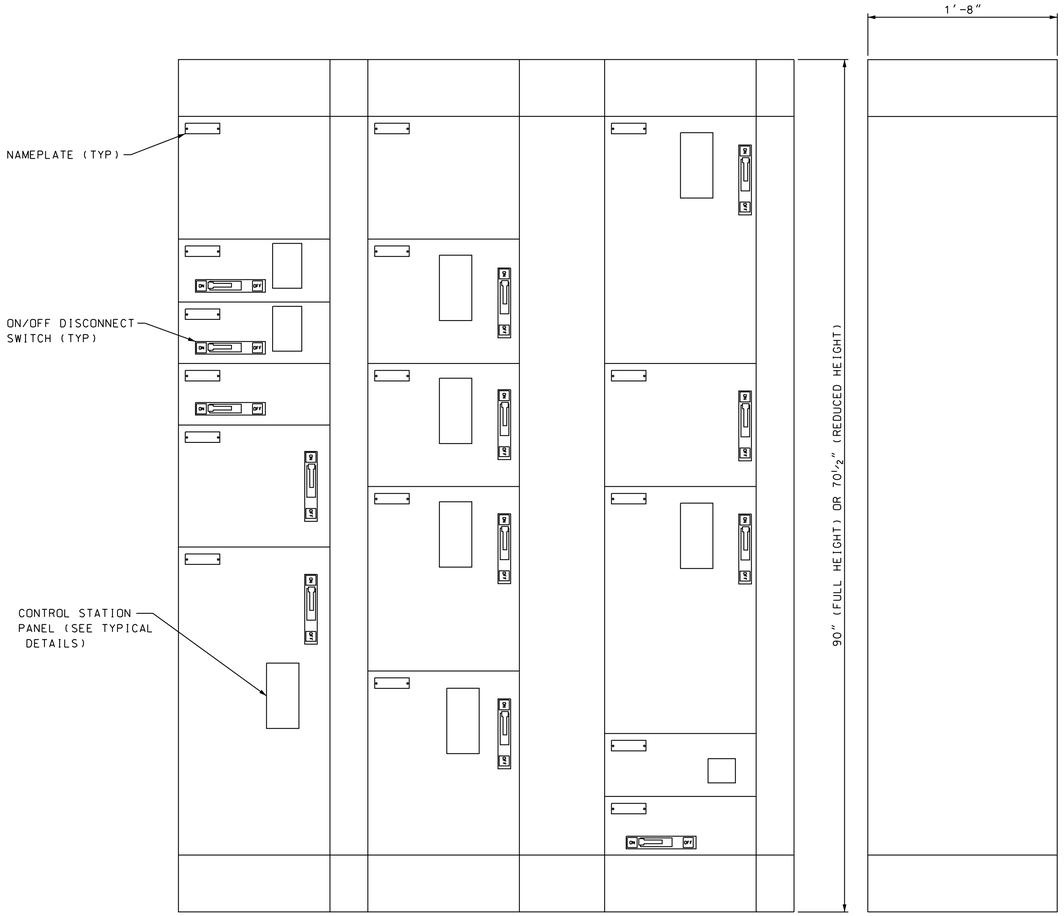

FRONT ELEVATION

SIDE ELEVATION

MOTOR CONTROL CENTER TYPICAL LAYOUT

SCALE: 1 1/2" = 1'-0"

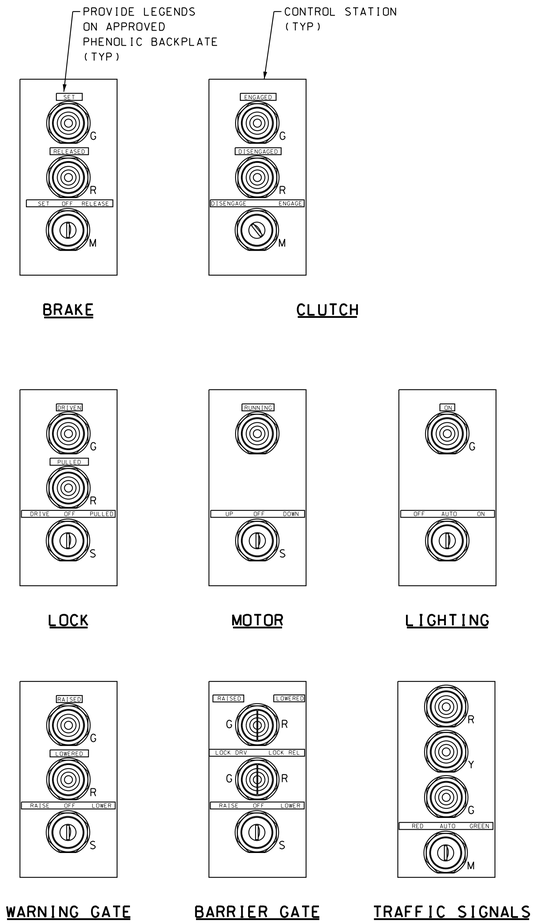

BRAKE

CLUTCH

LOCK

MOTOR

LIGHTING

WARNING GATE

BARRIER GATE

TRAFFIC SIGNALS

CONTROL STATION OPERATOR LAYOUTS

NOT TO SCALE

NO OPERATORS REQUIRED ON BUCKETS FEEDING TRANSFORMERS, PANELBOARDS, OR MISCELLANEOUS EQUIPMENT.

NOTES:

1. TYPICAL LAYOUT OF MCC COMPONENTS SHOWN. TO THE GREATEST EXTENT POSSIBLE, PROVIDE STANDARD MANUFACTURER CONFIGURATIONS AND COMPONENTS, HOWEVER THE CONTRACTOR IS HEREBY ADVISED THAT PORTIONS OF THE MCCS MAY REQUIRE CUSTOM DESIGN AND FABRICATION IN ORDER TO ACHIEVE THE INTENT OF THE CONTRACT PLANS WITHIN THE MULTI-DISCIPLINARY COORDINATED CONSTRUCTION OF THE PROJECT. SUBMIT FINAL DIMENSIONS AND LAYOUTS AS SEPARATE SHOP DRAWING SUBMISSIONS BEFORE AND AFTER INSTALLATION FOR APPROVAL BY THE ENGINEER. SEE PLANS AND ONE-LINE DIAGRAM FOR COMPONENTS REQUIRED IN EACH LOCATION.

2. CONTROL STATION KEY SWITCHES ARE PROVIDED FOR MAINTENANCE OPERATIONS ONLY. OPERATION WILL BYPASS ALL INTERLOCKS, AND SHALL BE PERFORMED BY AUTHORIZED PERSONNEL ONLY.

3. INSTALLATION AND MOUNTING HARDWARE SHALL BE AS PER MANUFACTURER'S RECOMMENDATIONS AND IN COORDINATION WITH THE STRUCTURAL DETAILS AS DELINEATED ON THE BRIDGE STRUCTURAL PLANS.

4. PROVIDE DOCUMENTATION OF THE WARRANTY UNDER SEPARATE COVER TO THE ENGINEER AND IN ACCORDANCE WITH SPECIFICATIONS.

5. THE MCC FABRICATION AND INSTALLATION INCLUSIVE OF ALL INTERNAL EQUIPMENT AND COMPONENTS SHALL CONFORM TO NEMA ICS-18, UL485 AND ALL APPLICABLE NEC CODES.

6. MCC DISCONNECTS SHALL SERVE AS IN-SIGHT DISCONNECTS WHERE LOCATED WITHIN THE SAME ROOM AS THE EQUIPMENT SERVED.

MCC SPECIFICATIONS:

RATINGS	277/480V, 3 PHASE, 4 WIRE, 60HZ, 42K AMPERE INTERRUPTING CURRENT.
ENCLOSURE	ENCLOSED, DEADFRONT, FREE STANDING, NEMA 12 WITH RUST INHIBITING PRIMER AND FINISH AS PER MANUFACTURER STANDARD COLOR SCHEME. UNPAINTED PARTS TO BE GALVANIZED OR PLATED FOR RESISTANCE TO CORROSION. NO UNSEALED PENETRATIONS OR FANS ALLOWED.
NAMEPLATES	PHENOLIC ENGRAVED WITH LEGENDS AS SHOWN AND FASTENED BY MEANS OF SS SCREWS OR RIVETS. BLACK BACKGROUND WITH WHITE LETTERS.
MAINS/FEEDERS	BOTTOM ENTRY, CIRCUIT BREAKER PROTECTION. THERMAL MAGNETIC TRIP FOR 400A AND SMALLER FRAMES; ELECTRONIC TRIP FOR 600A AND LARGER FRAMES. PROVIDE ONE NORMALLY OPEN AND ONE NORMALLY CLOSED AUXILIARY CONTACT.
HORIZONTAL WIREWAY	ISOLATED, MIN 6 INCHES WIDE ON BOTH THE TOP AND BOTTOM OF THE ENCLOSURE WITH ROUNDED CORNERS AND ROLLED EDGES.
VERTICAL WIREWAY	LOCATED IN EACH SECTION THAT ACCEPTS PLUG-IN UNITS. MIN 4.4 INCHES WIDE WITH PERMANENT WALLS FOR ISOLATION FROM UNIT INTERIORS. ACCESSIBLE THROUGH SEPARATE HINGED DOORS WITH CABLE TIE SUPPORTS TO HOLD WIRING IN PLACE.
BUS SUPPORTS	HIGH STRENGTH, NON-TRACKING GLASS FILLED POLYESTER.
HORIZONTAL BUS (POWER)	FULLY RATED, TIN PLATED COPPER, CONTINUOUSLY BRACED WITHIN EACH SECTION.
VERTICAL BUS (POWER)	FULLY RATED TIN PLATED COPPER, CONTINUOUSLY BRACED AND SANDWICHED IN GLASS-FILLED POLYESTER MOLDING. TO BE ISOLATED VIA A NON-METALLIC MOLDED COVER. CAPABLE OF ACCEPTING PLUG IN LOADS UP TO 600A.
NEUTRAL BUS	FULLY RATED AND SOLIDLY GROUNDED.
GROUND BUS	UNPLATED COPPER. BOTTOM MOUNTED MIN 1/4 INCH BY 1 INCH. GROUNDING STABS TO BE PROVIDED IN EACH UNIT VIA A VERTICALLY CONNECTED GROUND BUS SUCH THAT THE GROUND ENGAGES PRIOR TO ANY POWER STABS ENGAGING.
SPLICES	2 BOLT MIN WITH EACH BOLT CAPABLE OF INDEPENDENTLY SUPPORTING THE LOAD.
UNIT CUBICLES	PLUG-IN TYPE BELOW NEMA SIZE 5 FVNR. DOOR SHALL OPEN AWAY FROM VERTICAL WIREWAY AND BE FASTENED TO THE STATIONARY STRUCTURE.
STABS	TIN PLATED COPPER WITH SELF ALIGNING, HIGH PRESSURE FOUR POINT CONTACT STABS WITH A DEDICATED GROUND STAB MOUNTED IN THE REAR OF THE UNIT.
DISCONNECT	HEAVY DUY, NON-CONDUCTIVE, LOCKABLE IN THE HANDLES OFF POSITION WITH INTERLOCKS PER NEMA WHERE REQUIRED. INTERLOCKED TO PREVENT REMOVAL OR INSERTION IN THE ON POSITION.
PILOT DEVICES	NEMA TYPE 4/13 WATER TIGHT/OIL TIGHT, CORROSION-PROOF.
TERMINAL BLOCKS	PULL APART CONTROL TYPE TERMINAL BLOCKS SHALL BE PROVIDED ON ALL CONTACTOR AND STARTER UNITS. POWER TERMINAL BLOCKS SHALL BE PROVIDED ON ALL CONTACTOR STARTER UNITS, RATED NEMA SIZE 3 AND BELOW THAT UTILIZE VERTICALLY OPERATED DISCONNECTS.
STARTERS	NEMA DESIGN WITH MOLDED COILS, REPLACEABLE CONTACTS AND METAL MOUNTING PLATES. PROVISIONS FOR 7 AUXILIARY CONTACTS AND 1 OVERLOAD ALARM CONTACT. 3 POLE MANUAL RESET OVERLOAD RELAYS WITH CLASS 20 OPERATION. SHALL BE SIZE 1 OR LARGER WITH NO INTERMEDIATE SIZES ACCEPTABLE.
COMMUNICATIONS	EHTERNET/IP COMMUNICATION SHALL BE INCORPORATED INTO THE MCC DESIGN, INCLUDING BUT NOT LIMITED TO THE MOTOR STARTERS, CONTACTORS, POWER MONITORING, AND PC EQUIPMENT. ETHER NET CABLING SHALL BE 600V UL PLTC RATED AND PORTS SHALL BE PROVIDED IN EACH VERTICAL SECTION FOR THE RESPECTIVE EQUIPMENT.
SURGE	160KA PER PHASE SURGE PROTECTION TO BE PROTECTION PROVIDED ON ALL INCOMING LINES.

LEGEND:

G/R — PILOT LIGHT
G = GREEN
R = RED
Y = YELLOW

S/M — 3 POSITION KEYSWITCH, CENTER OFF
S = SPRING RETURN TO CENTER
M = MAINTAINED POSITION

G R — DUAL PILOT LIGHT
G = GREEN
R = RED

S/M — 2 POSITION KEYSWITCH
S = SPRING RETURN TO CENTER
M = MAINTAINED POSITION

KEYS TO BE THE SAME ON ALL DEVICES

80% SUBMISSION
JANUARY 18, 2012

ARCHER WESTERN CONTRACTORS

HNTB
HNTB Corporation
The HNTB Companies
Engineers Architects Planners

SUBDIRECTORY	.DGN LOCATOR	SHEET SCALE
Plans	13678F-E54-55-56MC	AS SHOWN

STATE OF NEW HAMPSHIRE
DEPARTMENT OF TRANSPORTATION * BUREAU OF BRIDGE DESIGN

TOWN PORTSMOUTH, NH - KITTERY, ME | BRIDGE NO. 247/084 | STATE PROJECT 13678

LOCATION US ROUTE 1 OVER THE PISCATAQUA RIVER

MOTOR CONTROL CENTER DETAILS

REVISIONS AFTER PROPOSAL		BY	DATE		BY	DATE
	DESIGNED	MCG	12/11	CHECKED	GP	12/11
	DRAWN	GS	12/11	CHECKED	DR	12/11
	QUANTITIES	XXX	XX/XX	CHECKED	XXX	XX/XX

ISSUE DATE
REV. DATE

FEDERAL PROJECT NO. BHF-T-0101(015)
SHEET NO. XXX

BRIDGE SHEET E54 OF E67
FILE NUMBER XXX-X-X
TOTAL SHEETS XXX

DATE/TIME: 1/18/2012 3:36:12 PM USER: gstephenson
FILE NAME: s:\FFL\WOS\CADD\55519_Portsmouth_R1_Memorial_Bridge\E1\Plans\13678F-E54-55-56MC.dgn
MODEL NAME: Plan 3
LAST SAVE: 1/18/2012 2:50:10 PM

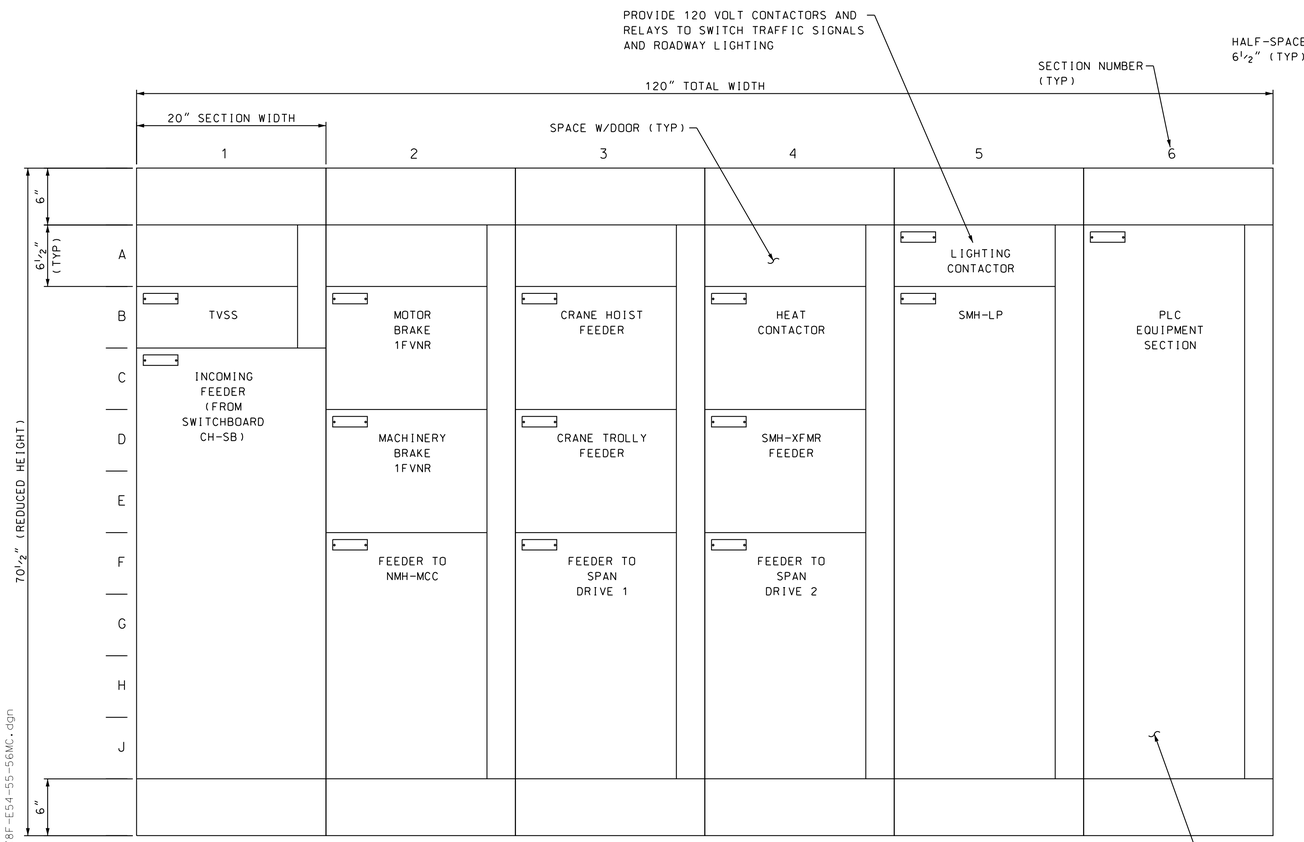

SOUTH MACHINERY HOUSE MCC (SMH-MCC)

SCALE: 1 1/2" = 1'-0"

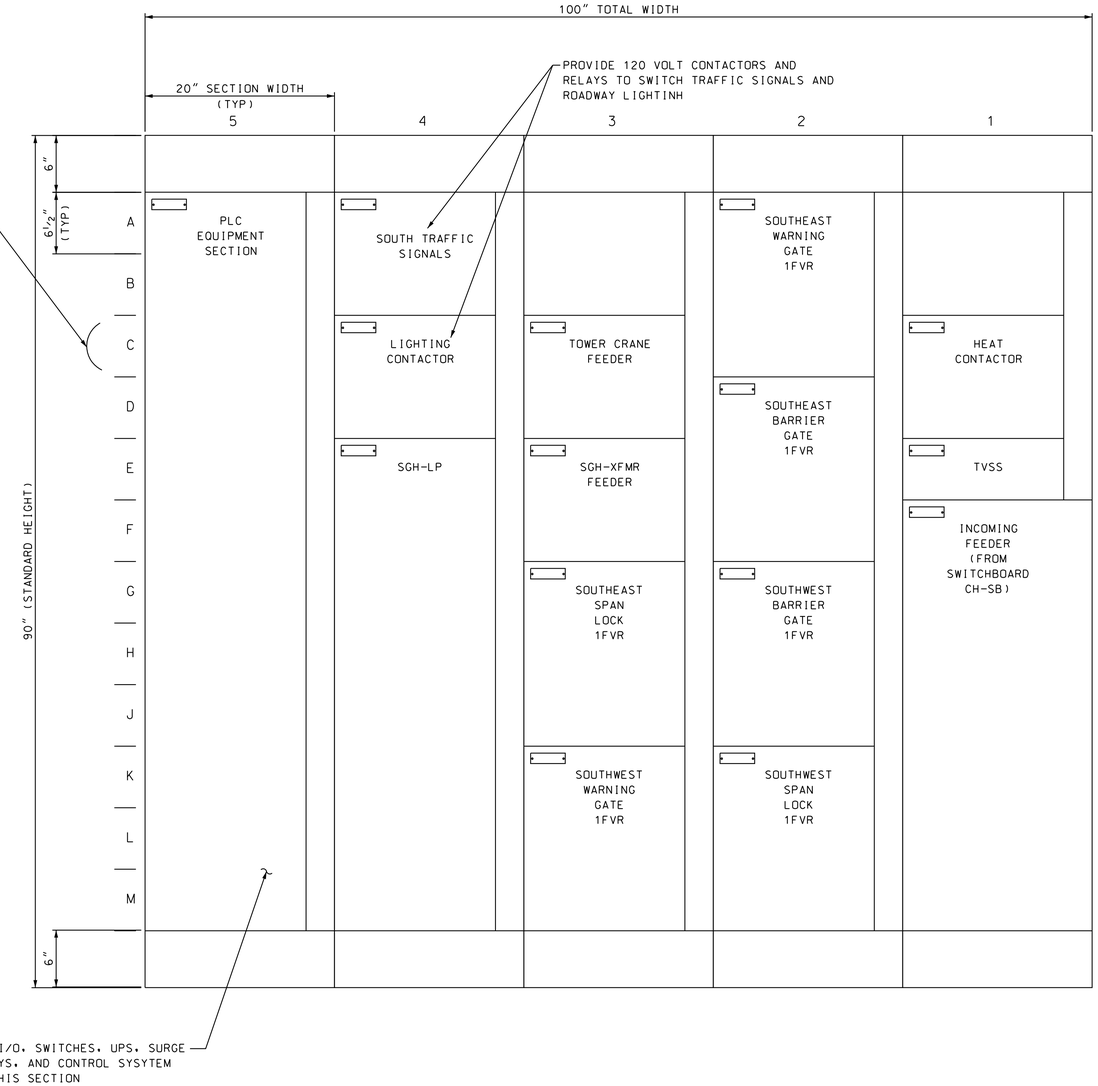

SOUTH GATE HOUSE MCC (SGH-MCC)

SCALE: 1 1/2" = 1'-0"

NOTES:

1. LAYOUTS ARE DIAGRAMMATIC AND MAY VARY BASED ON MANUFACTURER SPECIFIC PRODUCTS.
2. SEE ONE-LINE DIAGRAM FOR LIST OF ABBREVIATIONS USED ON THIS DRAWING.
3. SEE MOTOR CONTROL CENTER DETAILS DRAWING FOR GENERAL MCC NOTES AND SPECIFICATIONS.
4. SEE ONE-LINE DIAGRAM FOR MAIN AND FEEDER CIRCUIT BREAKER FRAME AND TRIP RATINGS.
5. PROVIDE CONTROL STATIONS AND DISCONNECTS FOR EACH POCKET. SEE SHEET E54 FOR DETAILS.

80% SUBMISSION
JANUARY 18, 2012

ARCHER WESTERN CONTRACTORS

HNTB
HNTB Corporation
The HNTB Companies
Engineers Architects Planners

STATE OF NEW HAMPSHIRE
DEPARTMENT OF TRANSPORTATION * BUREAU OF BRIDGE DESIGN

TOWN PORTSMOUTH, NH - KITTERY, ME BRIDGE NO. 247/084 STATE PROJECT 13678
LOCATION US ROUTE 1 OVER THE PISCATAQUA RIVER

SOUTH MOTOR CONTROL CENTERS

REVISIONS AFTER PROPOSAL		BY	DATE		BY	DATE
	DESIGNED	MCG	01/12	CHECKED	GP	01/12
	DRAWN	MDC	01/12	CHECKED	DR	01/12
	QUANTITIES	XXX	XX/XX	CHECKED	XXX	XX/XX

SUBDIRECTORY	.DGN LOCATOR	SHEET SCALE	ISSUE DATE	FEDERAL PROJECT NO.	SHEET NO.	TOTAL SHEETS
Plans	13678F-E54-55-56MC	AS SHOWN	REV. DATE	BHF-T-0101(015)	XXX	XXX

BRIDGE SHEET E55 OF E67
FILE NUMBER XXX-X-X

DATE/TIME: 1/18/2012 3:36:11 PM USER: gstephenson
FILE NAME: s:\FFL\WOs\CADDs\55519_Portsmouth_Rt1_Memorial_Bridge\E1\Plans\13678F-E54-55-56MC.dgn
MODEL NAME: Plan 2
LAST SAVE: 1/18/2012 2:50:10 PM

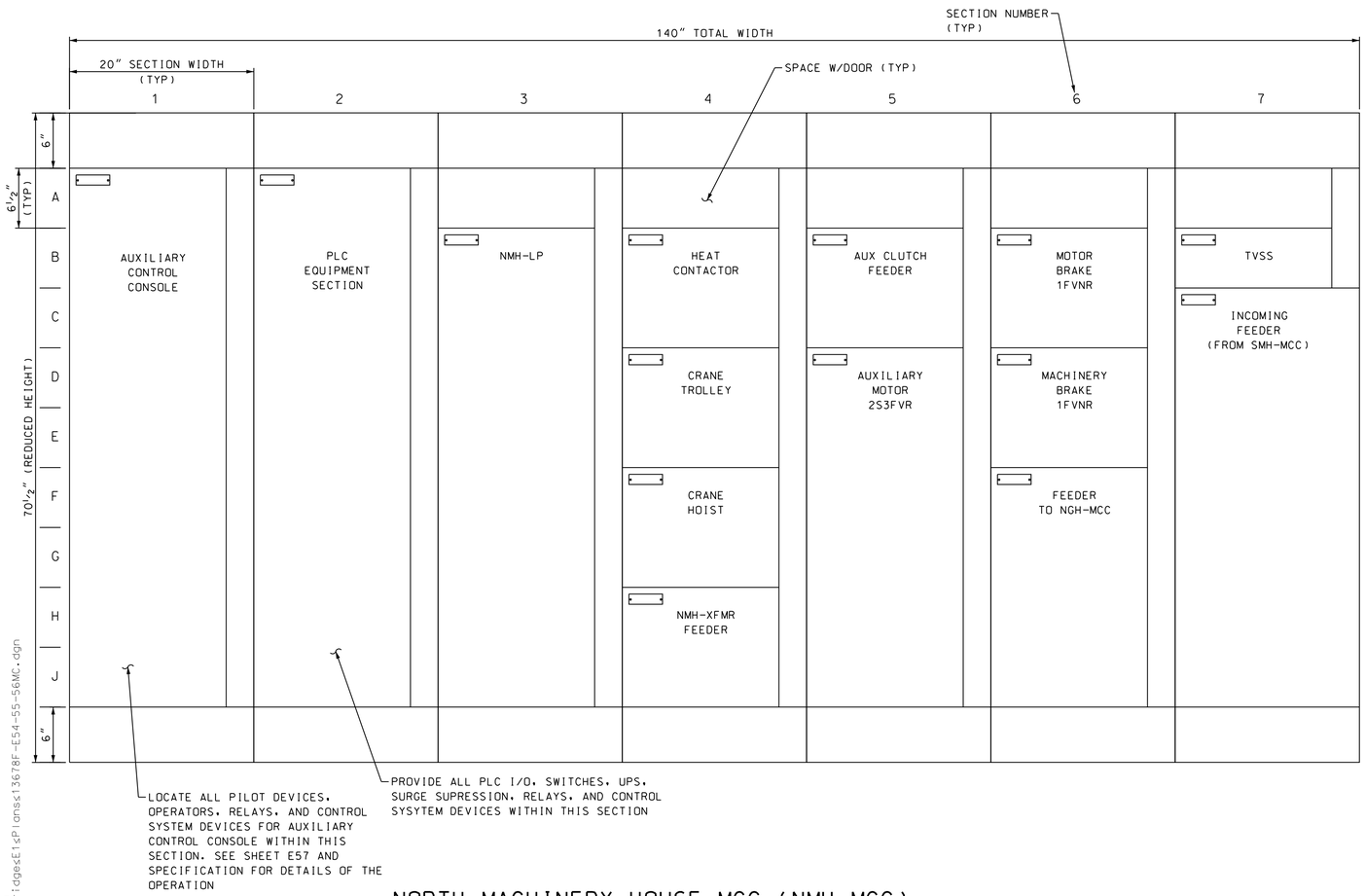

NORTH MACHINERY HOUSE MCC (NMH-MCC)

SCALE: 1 1/2" = 1'-0"

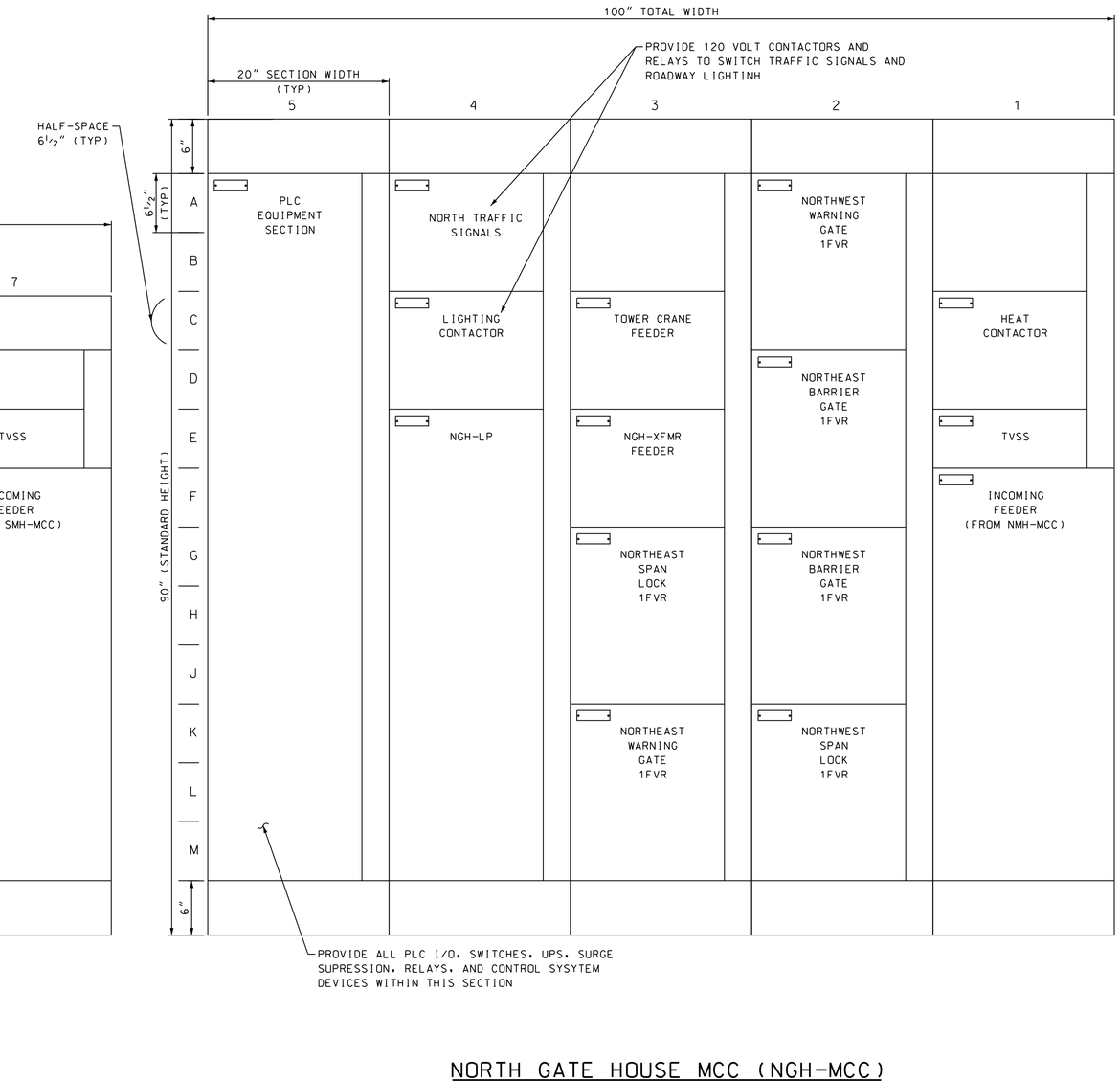

NORTH GATE HOUSE MCC (NGH-MCC)

SCALE: 1 1/2" = 1'-0"

NOTES:

1. SEE NOTES ON SOUTH MOTOR CONTROL CENTERS DRAWING.

80% SUBMISSION
JANUARY 18, 2012

ARCHER WESTERN CONTRACTORS

HNTB
HNTB Corporation
The HNTB Companies
Engineers Architects Planners

SUBDIRECTORY	.DGN LOCATOR	SHEET SCALE
Plans	13678F-E54-55-56MC	AS SHOWN

STATE OF NEW HAMPSHIRE
DEPARTMENT OF TRANSPORTATION * BUREAU OF BRIDGE DESIGN

TOWN PORTSMOUTH, NH - KITTERY, ME BRIDGE NO. 247/084 STATE PROJECT 13678
LOCATION US ROUTE 1 OVER THE PISCATAQUA RIVER

NORTH MOTOR CONTROL CENTERS

REVISIONS AFTER PROPOSAL		BY	DATE		BY	DATE
	DESIGNED	MCG	01/12	CHECKED	GP	01/12
	DRAWN	MDC	01/12	CHECKED	DR	01/12
	QUANTITIES	XXX	XX/XX	CHECKED	XXX	XX/XX

ISSUE DATE	FEDERAL PROJECT NO.	SHEET NO.	TOTAL SHEETS
REV. DATE	BHF-T-0101(015)	XXX	XXX

BRIDGE SHEET E56 OF E67
FILE NUMBER XXX-X-X

DATE/TIME: 1/18/2012 3:36:11 PM USER: gstephenson
FILE NAME: s:\FFL\WOS\CADD\55519_Portsmouth_Rt1_Memorial_Bridge\E1\Plans\13678F-E54-55-56MC.dgn
MODEL NAME: Plan 1
LAST SAVE: 1/18/2012 2:50:10 PM

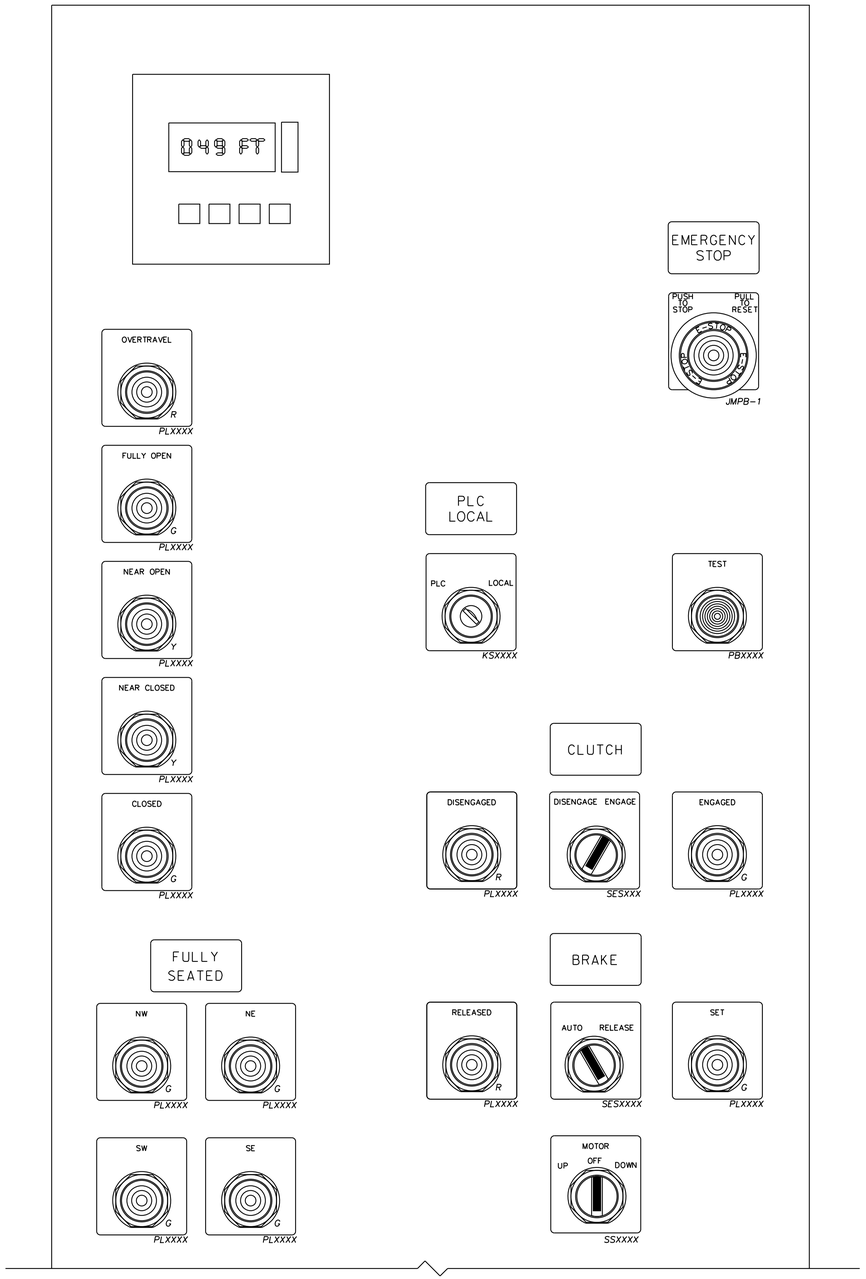

AUXILIARY CONSOLE LAYOUT DETAIL

SCALE: 6" = 1'-0"

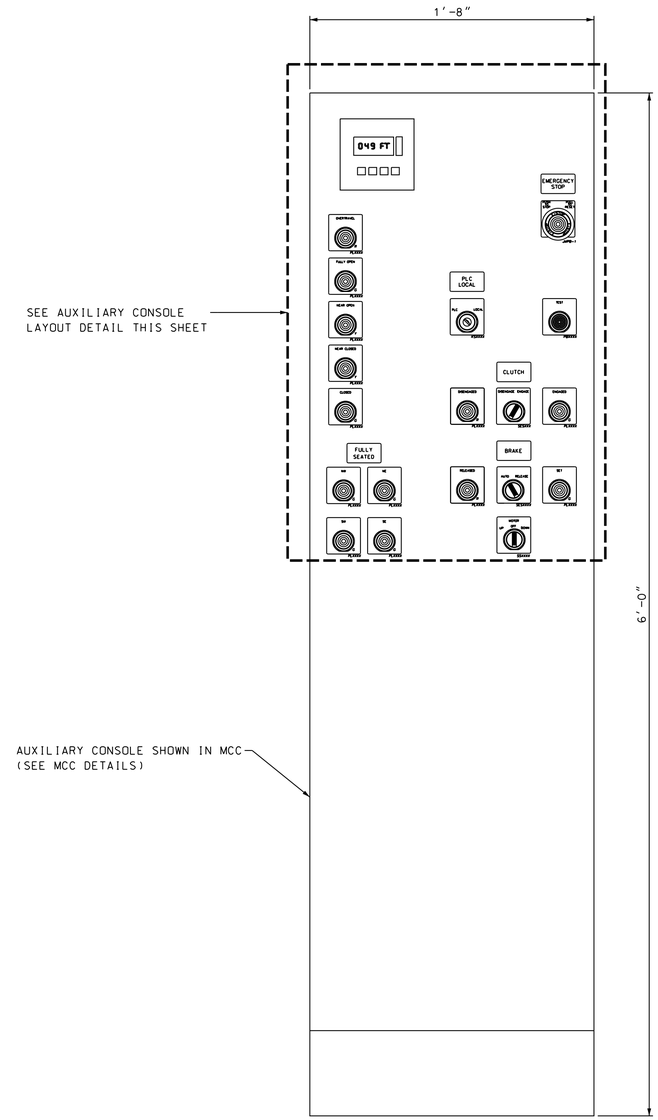

AUXILIARY CONSOLE LAYOUT

SCALE: 1" = 1'-0"

NOTES:

1. ALL CLUSTER PILOT LIGHTS WITH VERTICAL DIVISION ARE STANDARD CLUSTER PILOT LIGHTS INSTALLED 45° CLOCKWISE FROM NORMAL POSITION.
2. ALL CONSOLE NAMEPLATES SHALL BE PHENOLIC TYPE WITH BLACK LETTERING ON WHITE BACKGROUND AND FASTENED BY MEANS OF SS SCREWS OR RIVETS. SEE SPECIFICATIONS FOR MORE INFORMATION.
3. CPU AND MOTOR SELECTIONS SHALL BE DISPLAYED ON THE TOUCHSCREEN DISPLAYS ON THE ALARM CONSOLE AND AUXILIARY CONTROL CONSOLE.

80% SUBMISSION
JANUARY 18, 2012

ARCHER WESTERN CONTRACTORS

HNTB
HNTB Corporation
The HNTB Companies
Engineers Architects Planners

SUBDIRECTORY	.DGN LOCATOR	SHEET SCALE
Plans	13678F-E57-AuxCC	AS SHOWN

STATE OF NEW HAMPSHIRE
DEPARTMENT OF TRANSPORTATION * BUREAU OF BRIDGE DESIGN

TOWN PORTSMOUTH, NH - KITTERY, ME BRIDGE NO. 247/084 STATE PROJECT 13678

LOCATION US ROUTE 1 OVER THE PISCATAQUA RIVER

AUXILIARY CONTROL CONSOLE LAYOUT & DETAILS

REVISIONS AFTER PROPOSAL		BY	DATE		BY	DATE
	DESIGNED	MCG	12/11	CHECKED	GP	12/11
	DRAWN	GS	12/11	CHECKED	DR	12/11
	QUANTITIES	XXX	XX/XX	CHECKED	XXX	XX/XX

ISSUE DATE	FEDERAL PROJECT NO.	SHEET NO.	TOTAL SHEETS
REV. DATE	BHF-T-0101(015)	XXX	XXX

BRIDGE SHEET E57 OF E67

FILE NUMBER XXX-X-X

DATE/TIME: 1/18/2012 3:36:13 PM USER: gstephenson
FILE NAME: s:\FFLw00\cADD\55519_Portsmouth_Rt1_Memorial_Bridge\E1\Plans\13678F-E57-AuxCC.dgn
MODEL NAME: Plan 1
LAST SAVE: 1/18/2012 2:52:19 PM

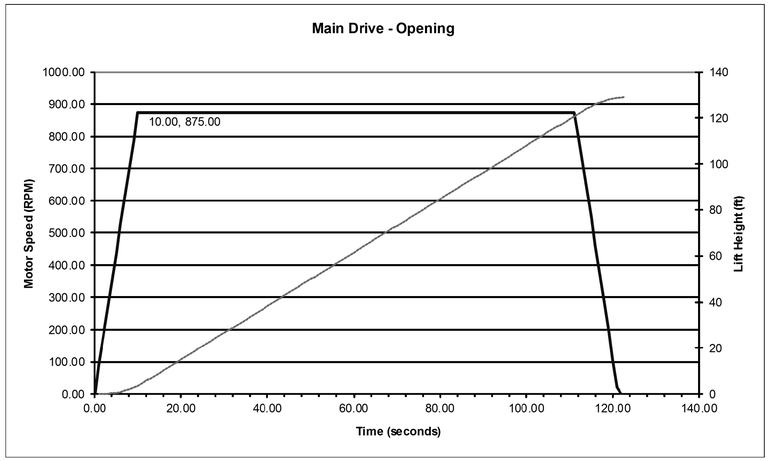

OPENING

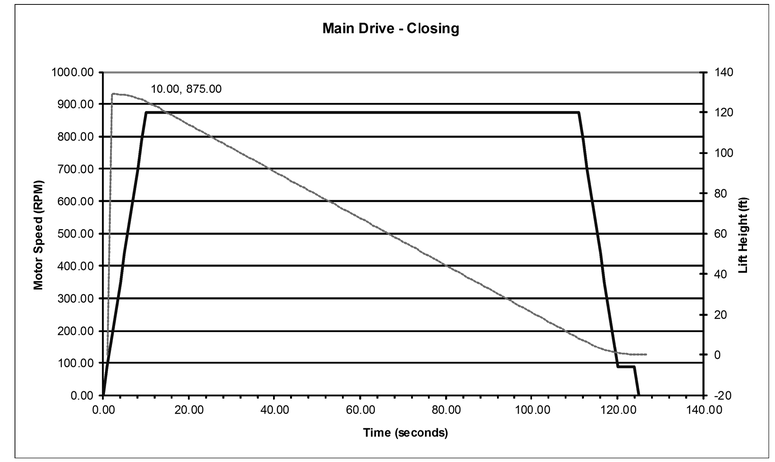

CLOSING

MAIN DRIVE

TO BE DETERMINED

OPENING

TO BE DETERMINED

CLOSING

AUXILIARY DRIVE

80% SUBMISSION
JANUARY 18, 2012

ARCHER WESTERN CONTRACTORS

HNTB
HNTB Corporation
The HNTB Companies
Engineers Architects Planners

SUBDIRECTORY	.DGN LOCATOR	SHEET SCALE
Plans	13678F-E58_Speed-Time	NONE

STATE OF NEW HAMPSHIRE
DEPARTMENT OF TRANSPORTATION * BUREAU OF BRIDGE DESIGN

TOWN PORTSMOUTH, NH - KITTERY, ME BRIDGE NO. 247/084 STATE PROJECT 13678

LOCATION US ROUTE 1 OVER THE PISCATAQUA RIVER

SPEED TIME CURVES

REVISIONS AFTER PROPOSAL		BY	DATE		BY	DATE
	DESIGNED	MCG	12/11	CHECKED	GP	12/11
	DRAWN	MDC	12/11	CHECKED	DR	12/11
	QUANTITIES	XXX	XX/XX	CHECKED	XXX	XX/XX

ISSUE DATE	FEDERAL PROJECT NO.	SHEET NO.	TOTAL SHEETS
REV. DATE	BHF-T-0101(015)	XXX	XXX

BRIDGE SHEET E58 OF E67

FILE NUMBER XXX-X-X

DATE/TIME: 1/18/2012 3:36:13 PM USER: gstephenson
FILE NAME: s:\FFLW00\CADD\55519_Portsmouth_Rt1_Memorial_Bridge\E1\Plans\13678F-E58_Speed-Time.dgn
MODEL NAME: Speed-Time Curves
LAST SAVE: 1/18/2012 10:18:30 AM