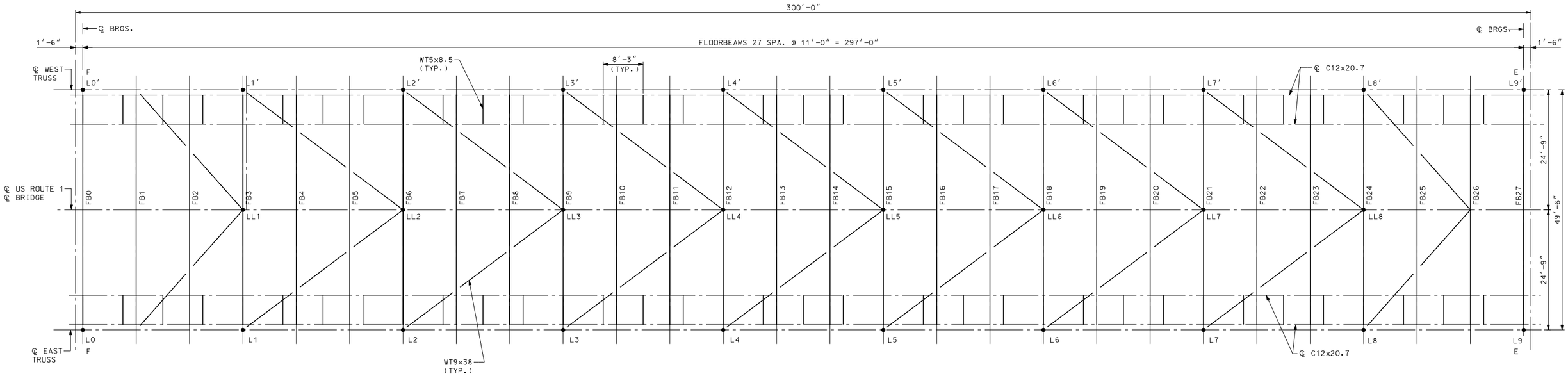

LIFT TRUSS SPAN - LOWER CHORD FRAMING PLAN

1" = 10'-0"

LEGEND:

L (n)	INDICATES LOWER CHORD PANEL POINT
FB (N)	INDICATES FLOORBEAMS
LL (n)	INDICATES LOWER LATERAL PANEL POINT

NOTES:

1. FOR GENERAL STRUCTURAL NOTES, SEE BRIDGE SHEET BXX.
2. FOR LIFT SPAN TRUSS ELEVATION DETAILS, SEE BRIDGE SHEET B42.
3. ALL FRAME DIMENSIONS ARE MEASURED HORIZONTALLY ALONG CENTERLINE OF TRUSS GIRDER.
4. FOR TYPICAL LIFT SPAN CROSS SECTIONS, SEE BRIDGE SHEET B41.
5. PANEL POINT NUMBERS WITH A PRIME SYMBOL DESIGNATE PANELS LOCATED ON THE WEST FASCIA OF THE STRUCTURE.
6. ALL STRUCTURAL STEEL SHALL BE AASHTO M270 GRADE 50 UNLESS NOTED OTHERWISE.

PRELIMINARY PLANS
SEPTEMBER 12, 2011

ARCHER WESTERN CONTRACTORS

HNTB
HNTB Corporation
The HNTB Companies
Engineers Architects Planners

SUBDIRECTORY	.DGN LOCATOR	SHEET SCALE
XX	$FILENAME$	1" = 10'-0"

STATE OF NEW HAMPSHIRE
DEPARTMENT OF TRANSPORTATION * BUREAU OF BRIDGE DESIGN

TOWN $TOWN$ BRIDGE NO. $BRNO$ STATE PROJECT $STNO$
LOCATION $BRDESCR$

LIFT SPAN - FRAMING PLAN

REVISIONS AFTER PROPOSAL	BY	DATE		BY	DATE
DESIGNED	CSE	09/11	CHECKED	TPZ	09/11
DRAWN	PRE	09/11	CHECKED	GT	09/11
QUANTITIES	XX	XX/XX	CHECKED	XX	XX/XX

ISSUE DATE	FEDERAL PROJECT NO.	SHEET NO.
REV. DATE	XXXXXX	XX

BRIDGE SHEET: B40 OF BT
FILE NUMBER: $BRFILNO$
TOTAL SHEETS: $CSHTOT$

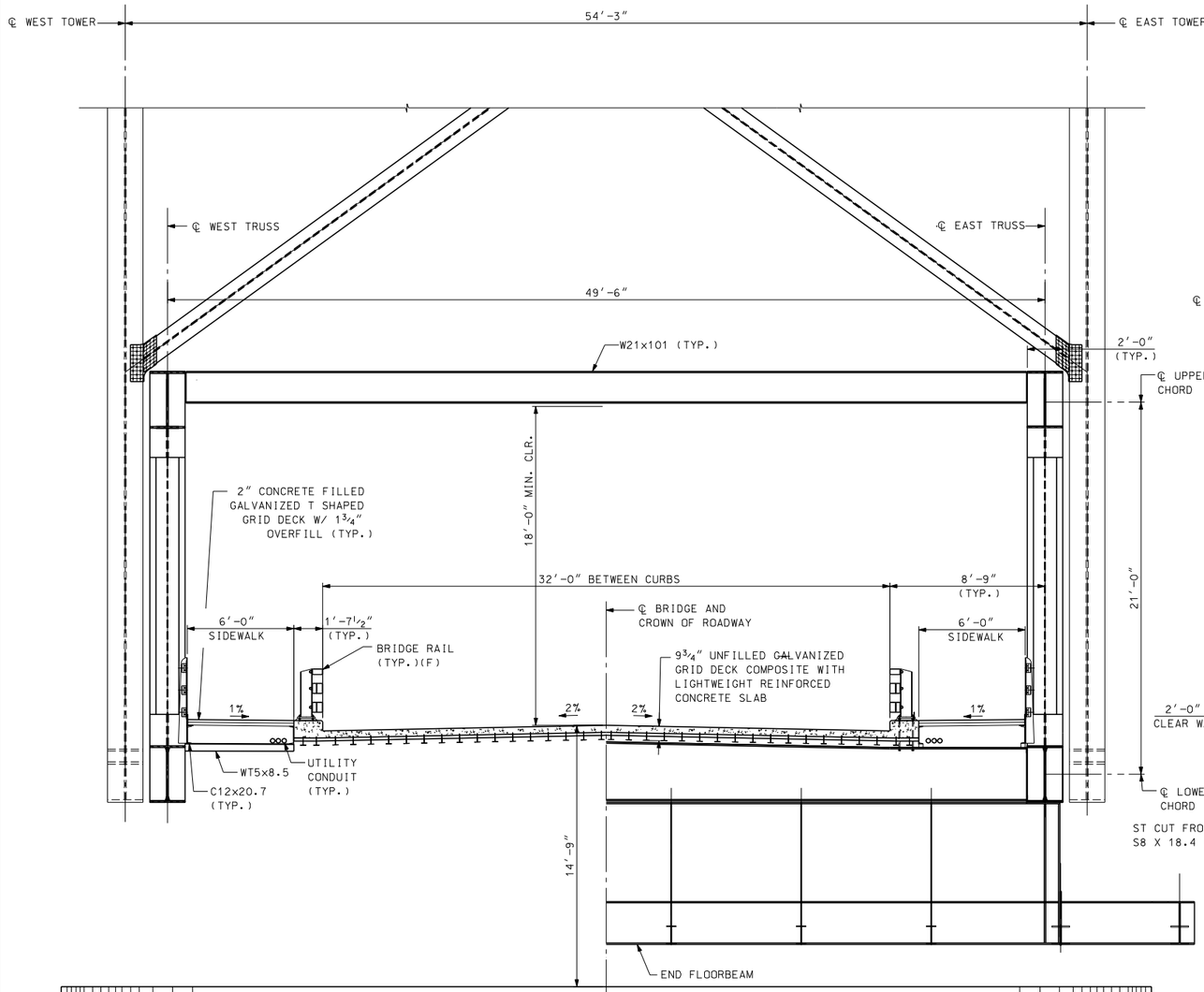

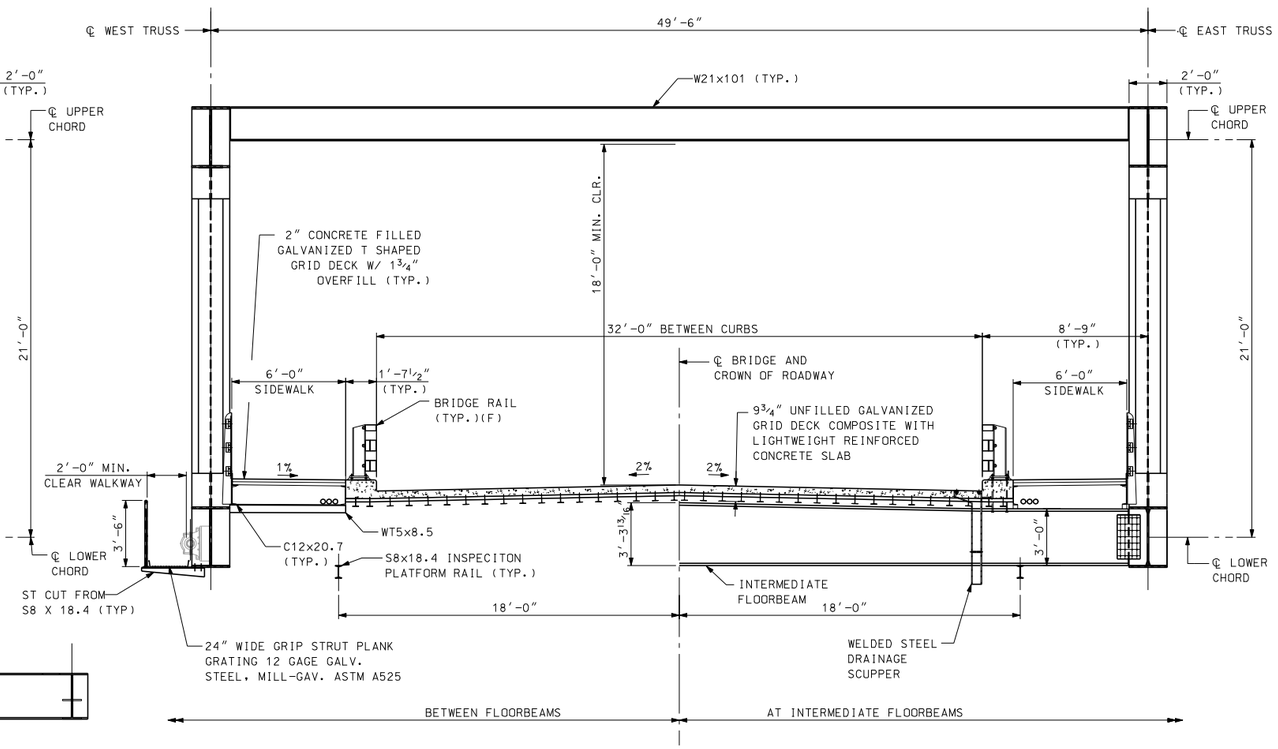

TYPICAL LIFT TRUSS SPAN CROSS SECTION

(LOOKING NORTH)

1/4″ = 1′-0″

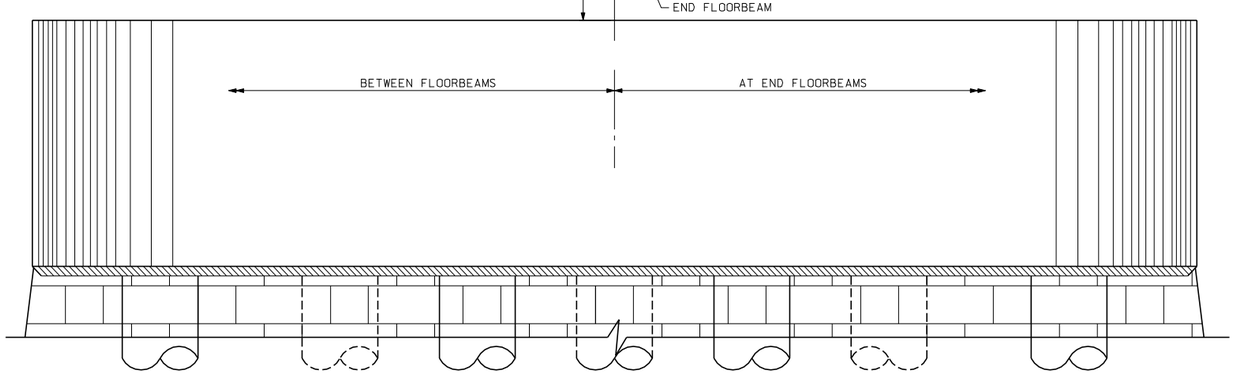

LIFT SPAN CROSS SECTION AT SOUTH TOWER

(LOOKING NORTH)

1/4″ = 1′-0″

NOTES:

1. FOR LIFT SPAN FRAMING PLAN, SEE BRIDGE SHEET B40.
2. ALL BOLTS SHALL BE 7/8″ DIA. HIGH STRENGTH ASTM A325 AND SHALL BE GALVANIZED PER THE REQUIREMENTS OF ASTM A153. NUTS AND WASHERS SHALL BE A563 AND F436 RESPECTIVELY, AND SHALL BE GALVANIZED PER REQUIREMENTS OF ASTM A153
3. FOR ROADWAY GRATING DETAILS, SEE BRIDGE SHEET B50.

PRELIMINARY PLANS
SEPTEMBER 12, 2011

ARCHER WESTERN CONTRACTORS

HNTB
HNTB Corporation
The HNTB Companies
Engineers Architects Planners

SUBDIRECTORY	.DGN LOCATOR	SHEET SCALE
XX	$FILENAME$	1/4" = 1'-0"

STATE OF NEW HAMPSHIRE
DEPARTMENT OF TRANSPORTATION * BUREAU OF BRIDGE DESIGN

TOWN $TOWN$ BRIDGE NO. $BRNO$ STATE PROJECT $STNO$

LOCATION $BRDESCR$

LIFT SPAN - TYPICAL CROSS SECTIONS

REVISIONS AFTER PROPOSAL	BY	DATE		BY	DATE
DESIGNED	CSE	09/11	CHECKED	TPZ	09/11
DRAWN	PRE	09/11	CHECKED	GT	09/11
QUANTITIES	XX	XX/XX	CHECKED	XX	XX/XX
ISSUE DATE					
REV. DATE					

FEDERAL PROJECT NO. XXXXXX
SHEET NO. XX

BRIDGE SHEET B41 OF BT
FILE NUMBER $BRFILNO$
TOTAL SHEETS $CSHTOT$

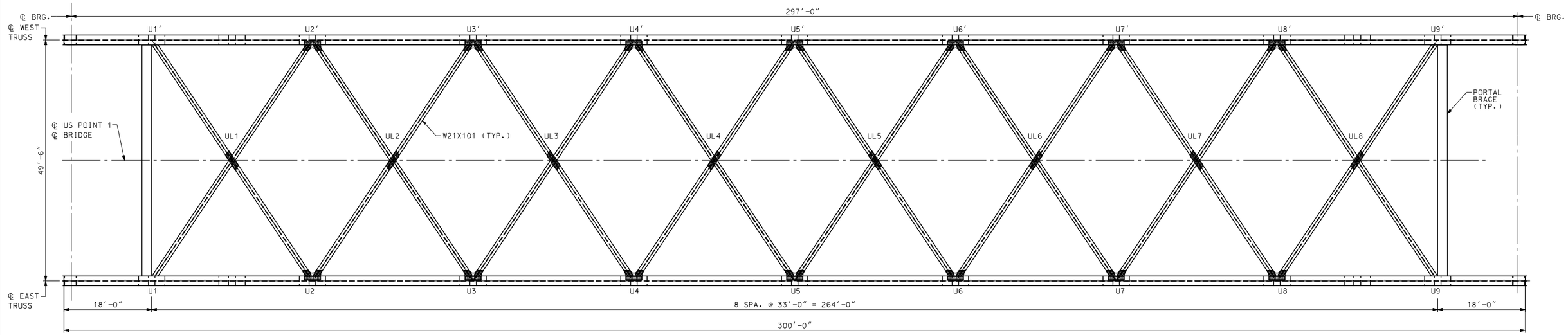

UPPER LATERAL BRACING PLAN

1″ = 10′-0″

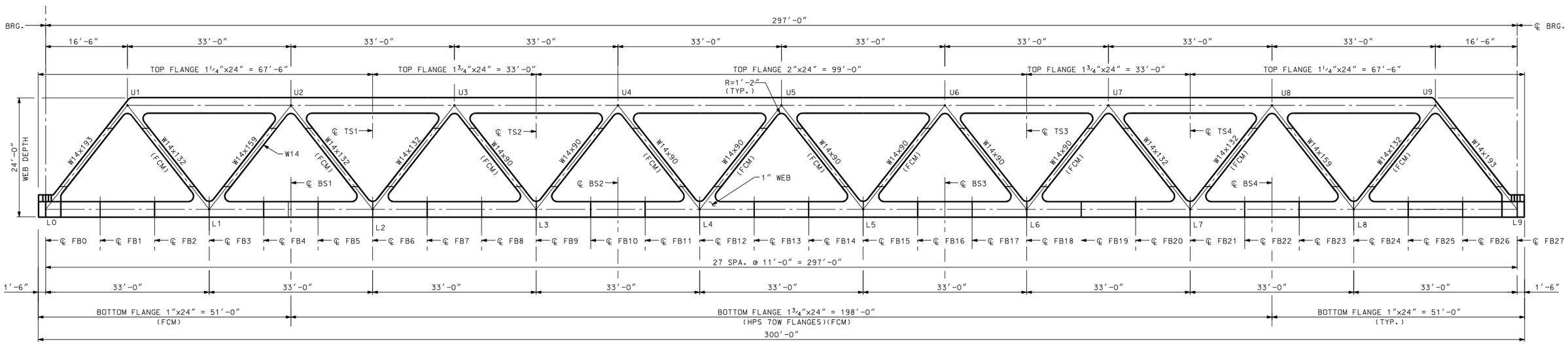

TYPICAL TRUSS ELEVATION

1″ = 10′-0″

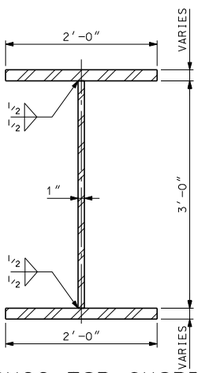

TRUSS TOP CHORD

1″= 1′-0″

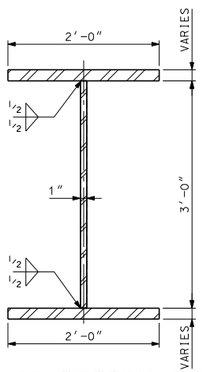

TRUSS BOTTOM CHORD

1″= 1′-0″

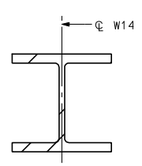

TYPICAL TRUSS DIAGONAL

1″= 1′-0″

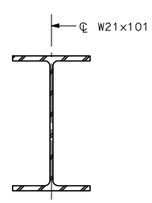

UPPER LATERAL DIAGONAL

1″= 1′-0″

LEGEND:

L(n)	INDICATES LOWER CHORD PANEL POINT
U(n)	INDICATES UPPER CHORD PANEL POINT
UL(n)	INDICATES UPPER LATERAL PANEL POINT
TS(n)	INDICATES UPPER CHORD SPLICE LOCATION
BS(n)	INDICATES LOWER CHORD SPLICE LOCATION
FCM	INDICATES FRACTURE CRITICAL MEMBER

NOTES:

1. ALL STRUCTURAL STEEL SHALL BE AASHTO M270 GRADE 50 UNLESS NOTED OTHERWISE.
2. PANEL POINT NUMBERS WITH A PRIME SYMBOL DESIGNATE PANELS LOCATED ON THE WEST FASCIA OF THE STRUCTURE.

PRELIMINARY PLANS
SEPTEMBER 12, 2011

ARCHER WESTERN CONTRACTORS

HNTB
HNTB Corporation
The HNTB Companies
Engineers Architects Planners

SUBDIRECTORY	.DGN LOCATOR	SHEET SCALE
XX	$FILENAME$	AS NOTED

STATE OF NEW HAMPSHIRE
DEPARTMENT OF TRANSPORTATION * BUREAU OF BRIDGE DESIGN

TOWN $TOWN$ BRIDGE NO. $BRNO$ STATE PROJECT $STNO$

LOCATION $BRDESCR$

TYPICAL LIFT SPAN TRUSS GEOMETRY

REVISIONS AFTER PROPOSAL		BY	DATE		BY	DATE
	DESIGNED	CSE	09/11	CHECKED	TPZ	09/11
	DRAWN	SPL	XX/XX	CHECKED	GT	09/11
	QUANTITIES	XX	XX/XX	CHECKED	XX	XX/XX
	ISSUE DATE		FEDERAL PROJECT NO.		SHEET NO.	
	REV. DATE		XXXXXX		XX	

BRIDGE SHEET: B42 OF BT
FILE NUMBER: $BRFILNO$
TOTAL SHEETS: $CSHTOT$

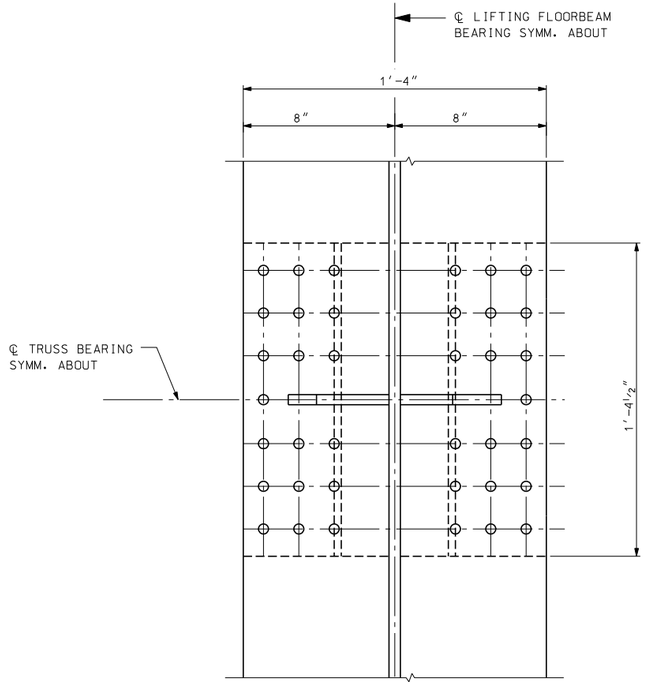

SECTION A-A
1 1/2" = 1'-0"

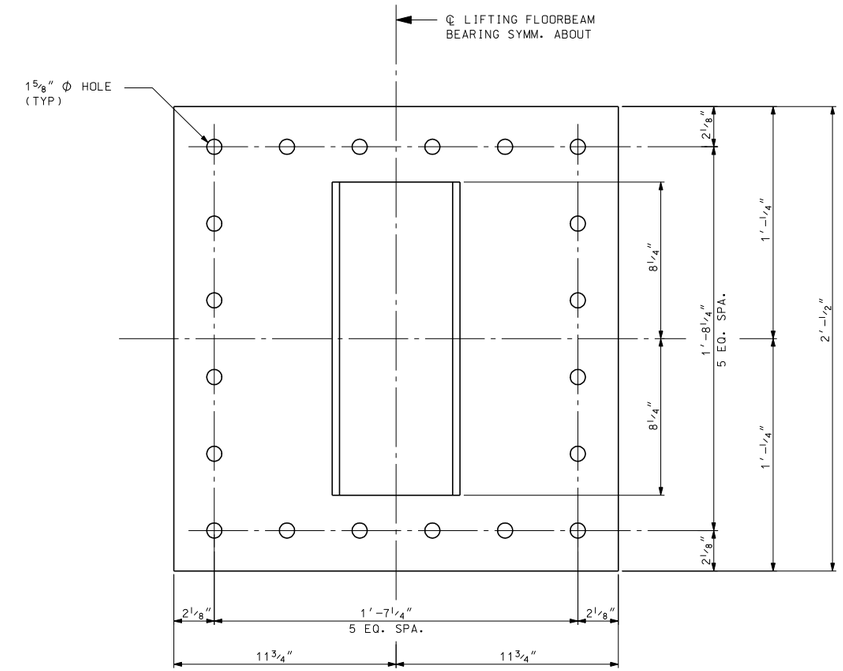

SECTION B-B
3" = 1'-0"

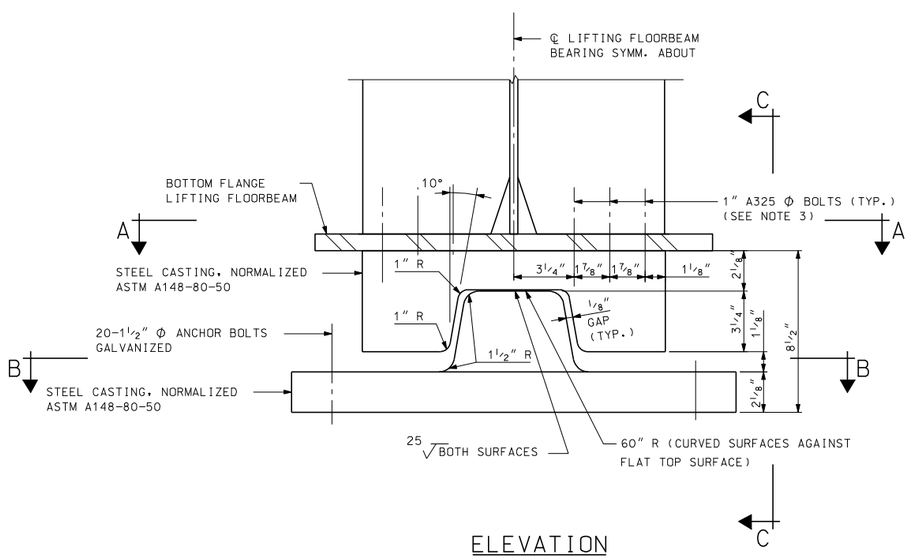

ELEVATION
3" = 1'-0"

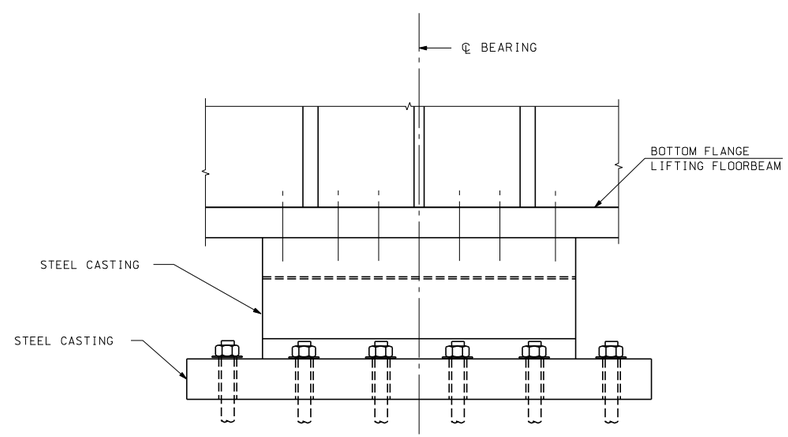

SECTION C-C
3" = 1'-0"

NOTES:

1. FOR BEARING LOCATIONS, SEE BRIDGE SHEET BXX.
2. PEDESTAL AND PEDESTAL REINFORCEMENT NOT SHOWN. FOR PEDESTAL SIZE, AND PEDESTAL REINFORCEMENT, SEE BRIDGE SHEET BXX.
3. DRILL TAP UPPER STEEL CASTING FOR THE 1" DIA. AASHTO M164 (ASTM A325) BOLTS.

TRUSS BEARINGS - FIXED
3" = 1'-0"

PRELIMINARY PLANS
SEPTEMBER 12, 2011

ARCHER WESTERN CONTRACTORS

HNTB
HNTB Corporation
The HNTB Companies
Engineers Architects Planners

SUBDIRECTORY	.DGN LOCATOR	SHEET SCALE
XX	$FILENAME$	AS NOTED

STATE OF NEW HAMPSHIRE
DEPARTMENT OF TRANSPORTATION * BUREAU OF BRIDGE DESIGN

TOWN $TOWN$ BRIDGE NO. $BRNO$ STATE PROJECT $STNO$
LOCATION $BRDESCR$

TRUSS BEARINGS - FIXED

REVISIONS AFTER PROPOSAL		BY	DATE		BY	DATE
	DESIGNED	JN	09/11	CHECKED	TPZ	09/11
	DRAWN	PRE	09/11	CHECKED	GT	09/11
	QUANTITIES	XX	XX/XX	CHECKED	XX	XX/XX

ISSUE DATE	FEDERAL PROJECT NO.	SHEET NO.	TOTAL SHEETS
REV. DATE	XXXXXX	XX	$CSHTOT$

BRIDGE SHEET: B43 OF BT
FILE NUMBER: $BRFILNO$

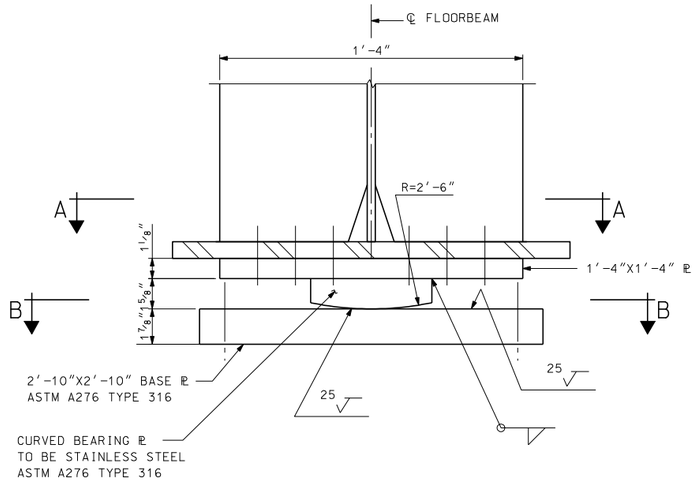

ELEVATION
3" = 1'-0"

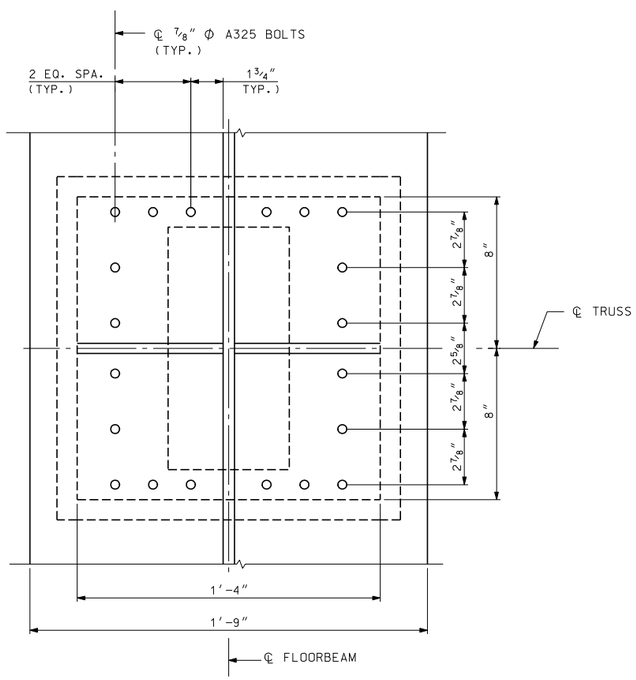

SECTION A-A
3" = 1'-0"

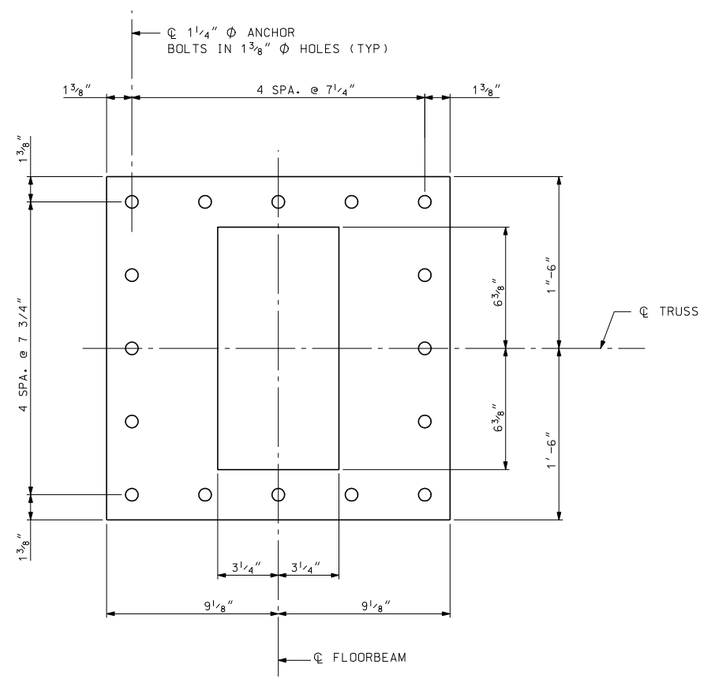

SECTION B-B
3" = 1'-0"

NOTES:

1. FOR BEARING LOCATIONS, SEE BRIDGE SHEET BXX.
2. PEDESTAL AND PEDESTAL REINFORCEMENT NOT SHOWN. FOR PEDESTAL SIZE, AND PEDESTAL REINFORCEMENT, SEE BRIDGE SHEET BXX.
3. ALL STRUCTURAL STEEL SHALL BE AASHTO M270 GRADE 50. UNLESS NOTED OTHERWISE.
4. ANCHOR BOLTS, NUTS, AND WASHERS SHALL CONFORM TO AASHTO M314 (ASTM F1554) GRADE 105 AND SHALL BE HOT-DIP GALVANIZED

TRUSS BEARINGS - EXPANSION
3" = 1'-0"

PRELIMINARY PLANS
SEPTEMBER 12, 2011

ARCHER WESTERN CONTRACTORS

HNTB
HNTB Corporation
The HNTB Companies
Engineers Architects Planners

SUBDIRECTORY	.DGN LOCATOR	SHEET SCALE
XX	$FILENAME$	3" = 1'-0"

STATE OF NEW HAMPSHIRE
DEPARTMENT OF TRANSPORTATION * BUREAU OF BRIDGE DESIGN

TOWN $TOWN$ BRIDGE NO. $BRNO$ STATE PROJECT $STNO$
LOCATION $BRDESCR$

TRUSS BEARINGS - EXPANSION

REVISIONS AFTER PROPOSAL		BY	DATE		BY	DATE
	DESIGNED	JN	09/11	CHECKED	GT	09/11
	DRAWN	PRE	09/11	CHECKED	TPZ	09/11
	QUANTITIES	XX	XX/XX	CHECKED	XX	XX/XX
	ISSUE DATE		FEDERAL PROJECT NO.		SHEET NO.	
	REV. DATE		XXXXXX		XX	

BRIDGE SHEET: B44 OF BT
FILE NUMBER: $BRFILNO$
TOTAL SHEETS: $CSHTOT$

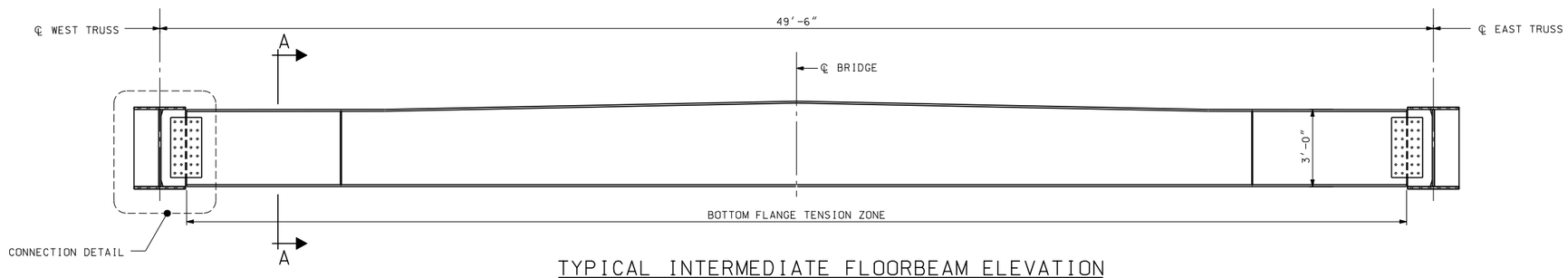

TYPICAL INTERMEDIATE FLOORBEAM ELEVATION

3/8" = 1'-0"

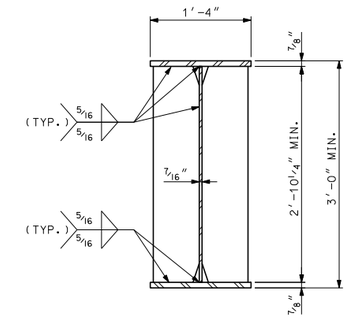

SECTION A-A

1" = 1'-0"

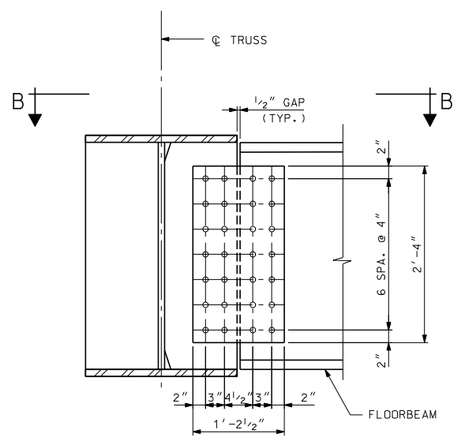

CONNECTION DETAIL

1" = 1'-0"

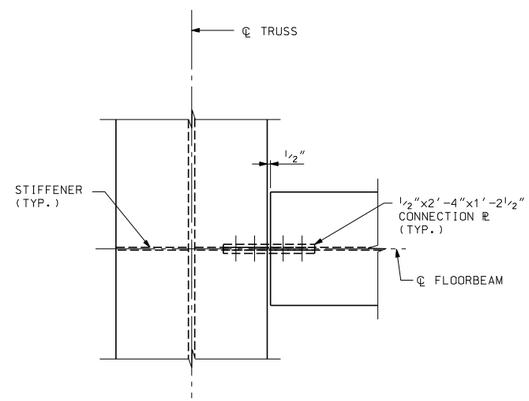

SECTION B-B

1" = 1'-0"

NOTES:

1. ALL STRUCTURE STEEL SHALL CONFORM TO AASHTO M270 (A709) GRADE 50 AND PAINTED.
2. ALL BOLTS SHALL BE 7/8" DIA. HIGH STRENGTH ASTM A325 AND SHALL BE GALVANIZED PER THE REQUIREMENTS OF ASTM A153. NUTS AND WASHERS SHALL BE A563 AND F43G RESPECTIVELY, AND SHALL BE GALVANIZED PER REQUIREMENTS OF ASTM A153
3. FOR LIFT TRUSS SPAN FRAMING PLANS, SEE BRIDGE SHEETS B40.
4. FOR LIFT TRUSS SPAN FLOORBEAM END FLOORBEAM ELEVATION, SEE BRIDGE SHEET B46.

PRELIMINARY PLANS
SEPTEMBER 12, 2011

STATE OF NEW HAMPSHIRE
DEPARTMENT OF TRANSPORTATION * BUREAU OF BRIDGE DESIGN

TOWN $TOWN$ BRIDGE NO. $BRNO$ STATE PROJECT $STNO$

LOCATION $BRDESCR$

LIFT SPAN - INTERMEDIATE FLOORBEAM ELEVATION

ARCHER WESTERN CONTRACTORS

HNTB
HNTB Corporation
The HNTB Companies
Engineers Architects Planners

REVISIONS AFTER PROPOSAL			BY	DATE		BY	DATE
		DESIGNED	CSE	09/11	CHECKED	GT	09/11
		DRAWN	PRE	09/11	CHECKED	TPZ	09/11
		QUANTITIES	XX	XX/XX	CHECKED	XX	XX/XX
		ISSUE DATE		FEDERAL PROJECT NO.		SHEET NO.	
		REV. DATE		XXXXXX		XX	

SUBDIRECTORY	.DGN LOCATOR	SHEET SCALE
XX	$FILENAME$	AS NOTED

BRIDGE SHEET: B45 OF BT
FILE NUMBER: $BRFILNO$
TOTAL SHEETS: $CSHTOT$

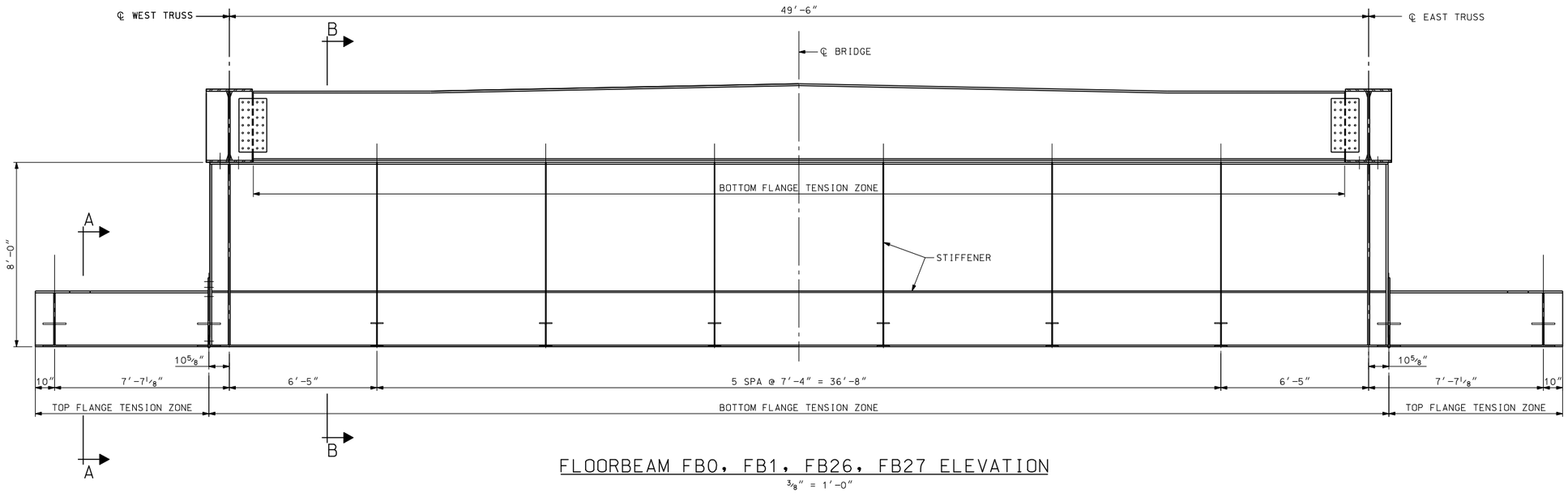

FLOORBEAM FB0, FB1, FB26, FB27 ELEVATION

3/8″ = 1′-0″

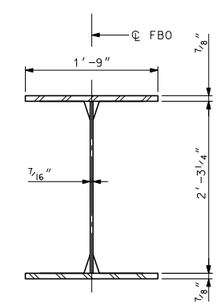

SECTION A-A

1″ = 1′-0″

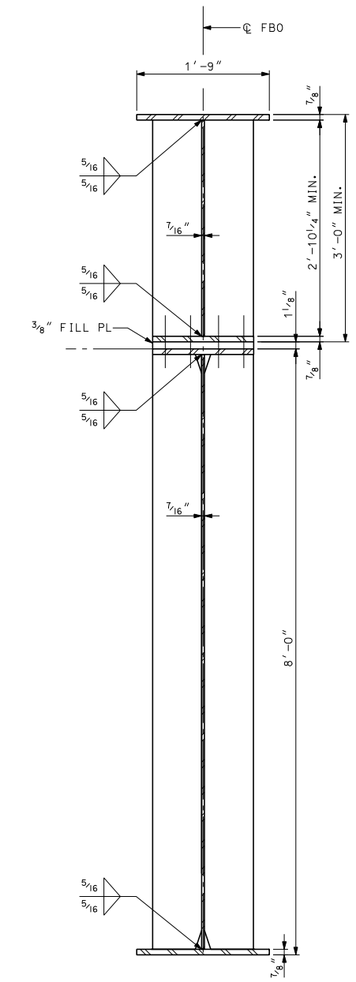

SECTION B-B

1″ = 1′-0″

NOTES:

1. ALL STRUCTURE STEEL SHALL CONFORM TO AASHTO M270 (A709) GRADE 50 AND PAINTED.

2. ALL BOLTS SHALL BE 7/8″ DIA. HIGH STRENGTH ASTM A325 AND SHALL BE GALVANIZED PER THE REQUIREMENTS OF ASTM A153. NUTS AND WASHERS SHALL BE A5G3 AND F43G RESPECTIVELY, AND SHALL BE GALVANIZED PER REQUIREMENTS OF ASTM A153

3. FOR LIFT TRUSS SPAN FRAMING PLAN, SEE BRIDGE SHEETS B40.

4. FOR TYPICAL INTERMEDIATE FLOORBEAM ELEVATION, SEE BRIDGE SHEETS B45.

5. FOR MACHINERY ROOM FRAMING PLAN, SEE BRIDGE SHEETS B49.

PRELIMINARY PLANS
SEPTEMBER 12, 2011

ARCHER WESTERN CONTRACTORS

HNTB
HNTB Corporation
The HNTB Companies
Engineers Architects Planners

SUBDIRECTORY	.DGN LOCATOR	SHEET SCALE
XX	$FILENAME$	AS NOTED

STATE OF NEW HAMPSHIRE
DEPARTMENT OF TRANSPORTATION * BUREAU OF BRIDGE DESIGN

TOWN $TOWN$ BRIDGE NO. $BRNO$ STATE PROJECT $STNO$

LOCATION $BRDESCR$

LIFT SPAN - END FLOORBEAM ELEVATION

REVISIONS AFTER PROPOSAL		BY	DATE		BY	DATE
	DESIGNED	CSE	09/11	CHECKED	TPZ	09/11
	DRAWN	PRE	09/11	CHECKED	GT	09/11
	QUANTITIES	XX	XX/XX	CHECKED	XX	XX/XX
	ISSUE DATE		FEDERAL PROJECT NO.		SHEET NO.	
	REV. DATE		XXXXXX		XX	

BRIDGE SHEET: B46 OF BT
FILE NUMBER: $BRFILNO$
TOTAL SHEETS: $CSHTOT$

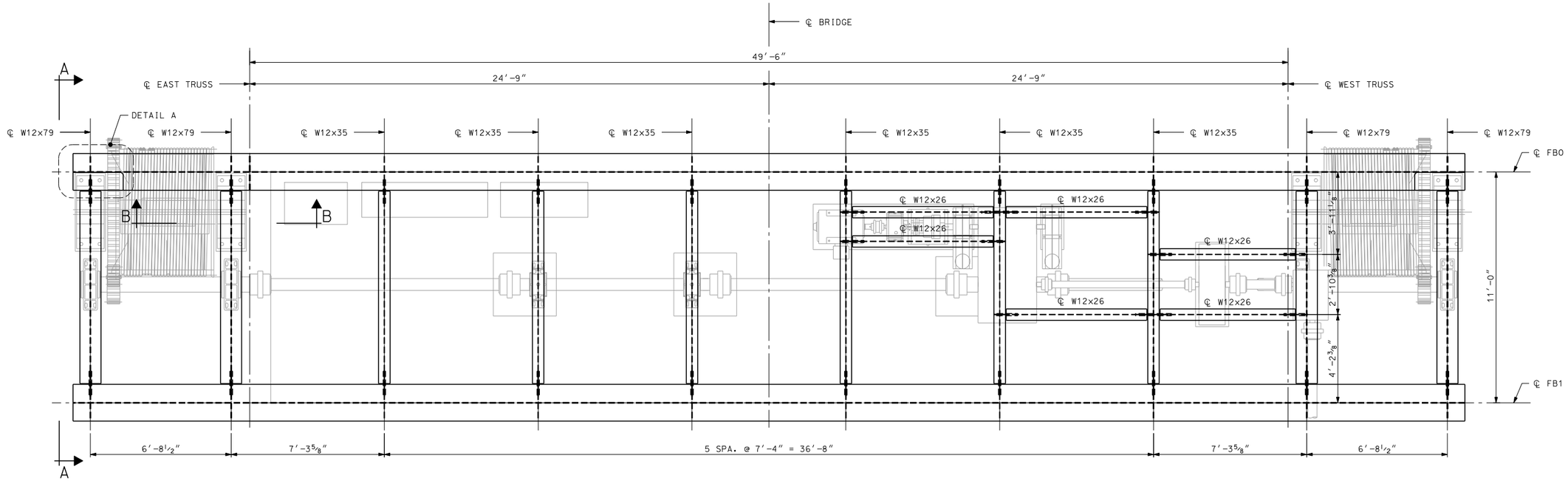

SOUTH MACHINERY ROOM PLAN

(NORTH, OPP. HAND)
3/8″ = 1′-0″

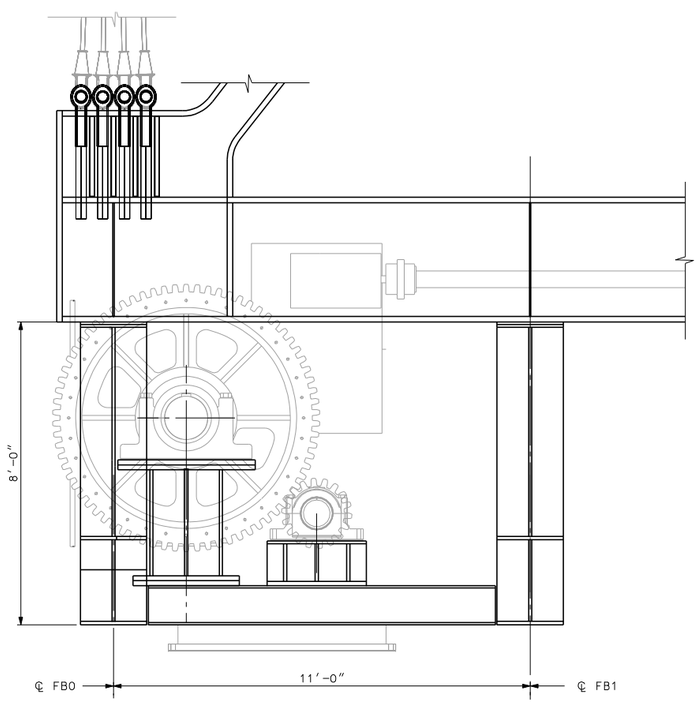

VIEW A-A

1/2″ = 1′-0″

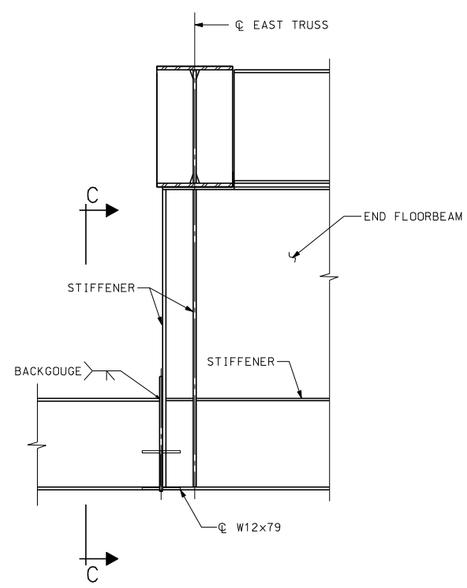

VIEW B-B

1/2″ = 1′-0″

SECTION C-C

1″ = 1′-0″

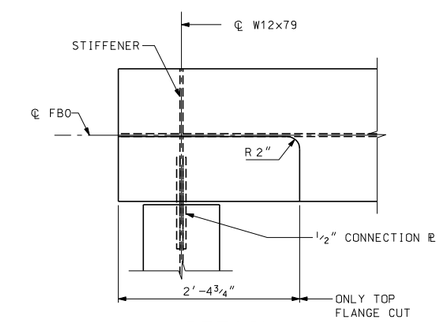

DETAIL A

1″ = 1′-0″

NOTES:

1. ALL STRUCTURE STEEL SHALL CONFORM TO AASHTO M270 (A709) GRADE 50 AND PAINTED.
2. ALL BOLTS SHALL BE 7/8″ DIA. HIGH STRENGTH ASTM A325 AND SHALL BE GALVANIZED PER THE REQUIREMENTS OF ASTM A153. NUTS AND WASHERS SHALL BE A563 AND F436 RESPECTIVELY, AND SHALL BE GALVANIZED PER REQUIREMENTS OF ASTM A153.
3. FOR END FLOORBEAM ELEVATION, SEE BRIDGE SHEETS BXX.
4. FOR MACHINERY LAYOUT AND DETAILS, SEE BRIDGE SHEETS MXX.

PRELIMINARY PLANS
SEPTEMBER 12, 2011

ARCHER WESTERN CONTRACTORS

HNTB
HNTB Corporation
The HNTB Companies
Engineers Architects Planners

SUBDIRECTORY	.DGN LOCATOR	SHEET SCALE
XX	$FILENAME$	AS NOTED

STATE OF NEW HAMPSHIRE
DEPARTMENT OF TRANSPORTATION * BUREAU OF BRIDGE DESIGN

TOWN $TOWN$ BRIDGE NO. $BRNO$ STATE PROJECT $STNO$
LOCATION $BRDESCR$

LIFT SPAN - MACHINERY ROOM PLAN

REVISIONS AFTER PROPOSAL		BY	DATE		BY	DATE
	DESIGNED	CSE	09/11	CHECKED	TPZ	09/11
	DRAWN	JN	09/11	CHECKED	GT	09/11
	QUANTITIES	XX	XX/XX	CHECKED	XX	XX/XX
	ISSUE DATE		FEDERAL PROJECT NO.		SHEET NO.	
	REV. DATE		XXXXXX		XX	

BRIDGE SHEET
B49 OFBT
FILE NUMBER
$BRFILNO$
TOTAL SHEETS
$CSHTOT$

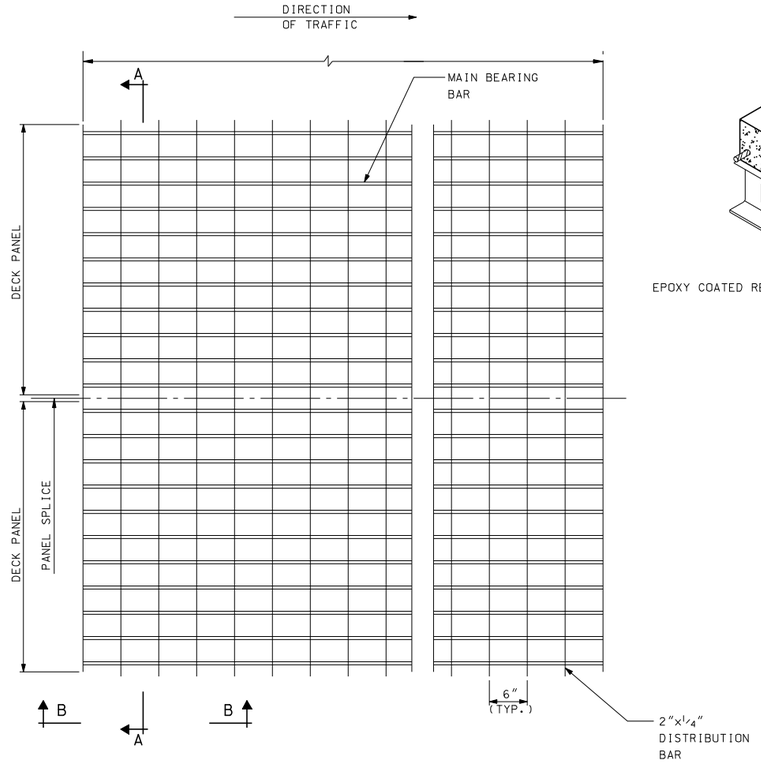

ROADWAY GRID PANEL

N.T.S.

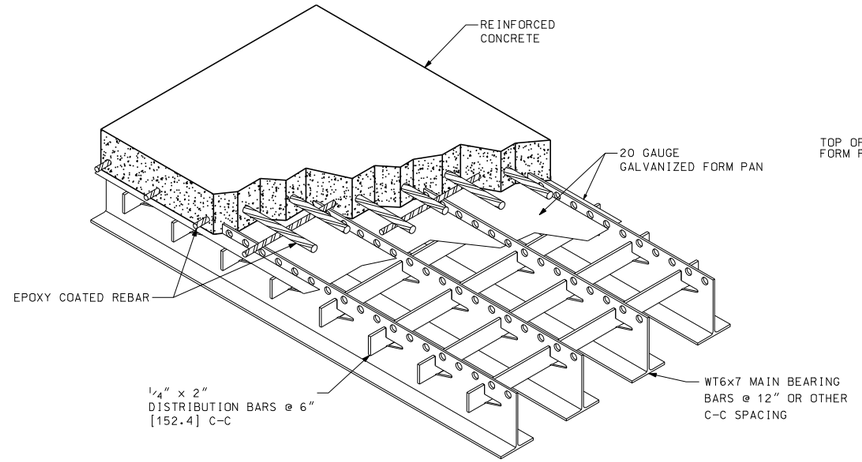

EXODERMIC BRIDGE DECK

(ISOMETRIC VIEW)
N.T.S.

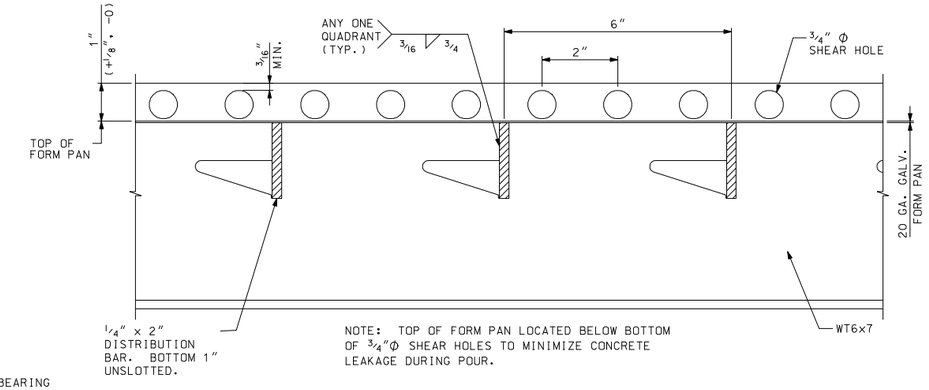

DETAIL A1-A1

(FABRICATION DETAILS)
6" = 1'-0"

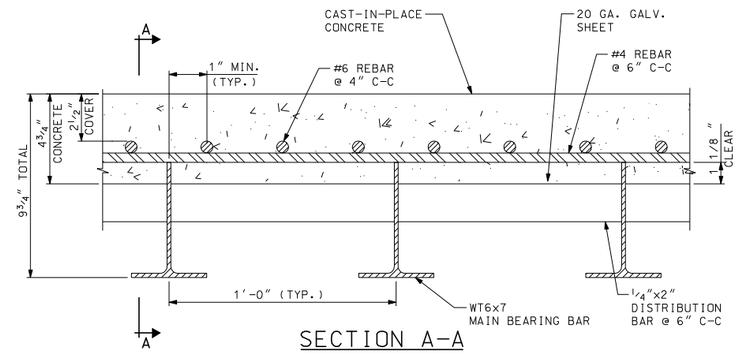

SECTION A-A

(TYPICAL SECTION THROUGH DECK)

REBAR LAYOUT SHALL BE AS SHOWN IN ORDER TO PERMIT THE MAXIMUM AMOUNT OF ROOM FOR ATTACHMENT OF SHEAR STUDS TO STRINGERS AND ADJUSTMENT OF LEVELING BOLTS. ALL REBAR SHALL BE EPOXY COATED.

3" = 1'-0"

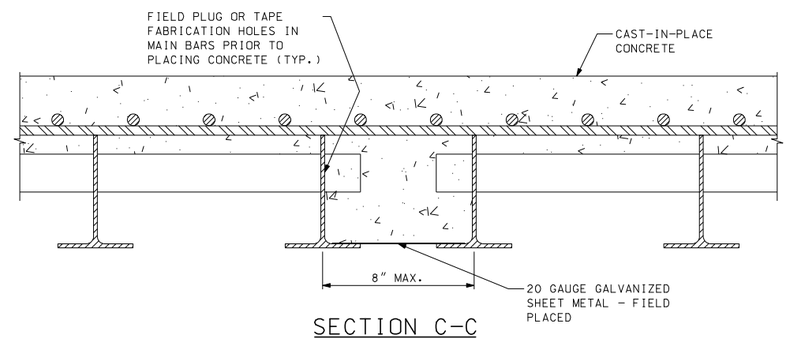

SECTION C-C

(TYPICAL CONNECTION BETWEEN PANELS)
3" = 1'-0"

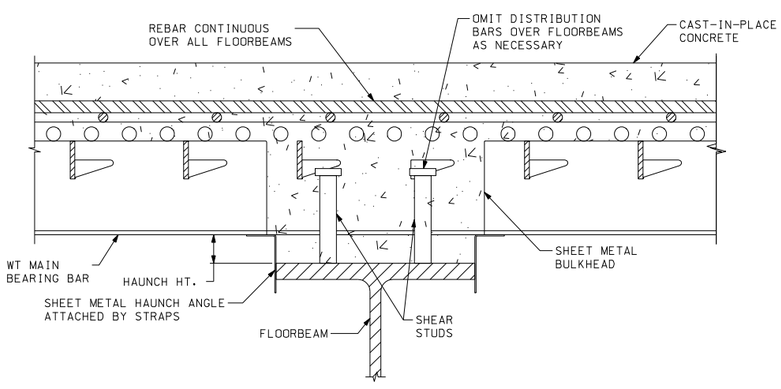

SECTION B-B (OPTION 1)

(CONNECTION TO FLOORBEAM)

LEVELING BOLTS NOT SHOWN

OTHER HAUNCH FORMING OPTIONS POSSIBLE

OMIT DISTRIBUTION BARS OVER FLOORBEAMS AS NECESSARY TO PROVIDE CLEARANCE FOR SHEAR STUDS AND LEVELING BOLTS

FOR HAUNCH HEIGHTS LESS THAN 1.5", PLACE HIGH STRENGTH POURABLE GROUT UP TO THE BOTTOM OF THE WT MAIN BAR PRIOR TO POURING CONCRETE

3" = 1'-0"

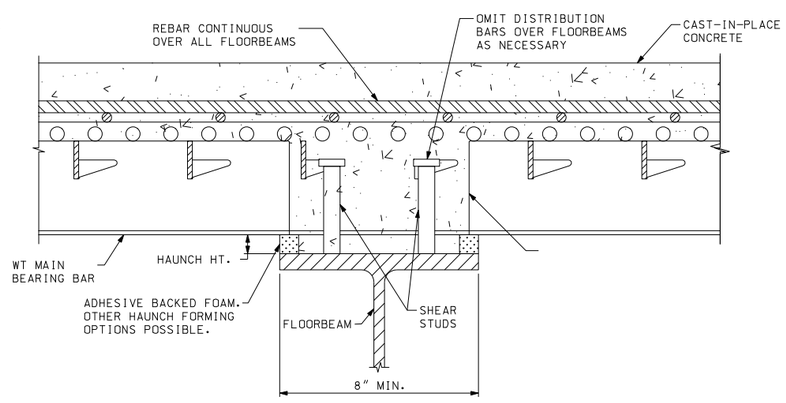

SECTION B-B (OPTION 2)

(CONNECTION TO FLOORBEAM)

LEVELING BOLTS NOT SHOWN

OMIT DISTRIBUTION BARS OVER FLOORBEAMS AS NECESSARY TO PROVIDE CLEARANCE FOR SHEAR STUDS AND LEVELING BOLTS

FOR HAUNCH HEIGHTS LESS THAN 1.5", PLACE HIGH STRENGTH POURABLE GROUT UP TO THE BOTTOM OF THE WT MAIN BAR PRIOR TO POURING CONCRETE

3" = 1'-0"

NOTES:

1. STEEL GRID SHALL CONFORM TO ASTM A709 GRADE 50 AND SHALL BE GALVANIZEDIN ACCORDANCE WITH ASTM A123.
2. LEVELING PLATE SHALL CONFORM TO ASTM A709 GR 3G. TRIM PLATES AND FORM PANS SHALL BE GALVANIZED.
3. REINFORCING STEEL IN GRID SHALL CONFORM TO ASTM A615 GRADE 60 AND SHALL BE EPOXY COATED.
4. USE LEVELING BOLTS TO ADJUST DECK TO ROADWAY PROFILE (SEE ROADWAY PLANS FOR ROADWAY PROFILE).
5. LIGHTWEIGHT CONCRETE SHALL HAVE A 28 DAY STRENGTH OF f'c = 4000 PSI AND UNIT WEIGHT 115 PCF UNREINFORCED.
6. STEEL GRID DECK SHALL BE PAID FOR UNDER ITEM XXX.
7. LIGHTWEIGHT CONCRETE FILL AND OVERFILL SHALL BE PAID FOR UNDER ITEM XXX.
8. EPOXY COATED REINFORCING STEEL SHALL BE PAID FOR UNDER ITEM XXX.
9. STEEL ONLY DECK UNIT WEIGHT SHALL NOT VARY MORE THAN ± 5% FROM TABULATEDVALUE SHOWN.

PRELIMINARY PLANS
SEPTEMBER 12, 2011

ARCHER WESTERN CONTRACTORS

HNTB
HNTB Corporation
The HNTB Companies
Engineers Architects Planners

SUBDIRECTORY	.DGN LOCATOR	SHEET SCALE
XX	$FILENAME$	

STATE OF NEW HAMPSHIRE
DEPARTMENT OF TRANSPORTATION * BUREAU OF BRIDGE DESIGN

TOWN $TOWN$ BRIDGE NO. $BRNO$ STATE PROJECT $STNO$

LOCATION $BRDESCR$

LIFT SPAN - ROADWAY GRATING DETAILS

BRIDGE SHEET B50 OF BT

REVISIONS AFTER PROPOSAL		BY	DATE		BY	DATE
	DESIGNED	CSE	09/11	CHECKED	TPZ	09/11
	DRAWN	SPL	09/11	CHECKED	GT	09/11
	QUANTITIES	XX	XX/XX	CHECKED	XX	XX/XX
	ISSUE DATE			FEDERAL PROJECT NO.	SHEET NO.	
	REV. DATE			XXXXXX	XX	

FILE NUMBER $BRFILNO$

TOTAL SHEETS $CSHTOT$

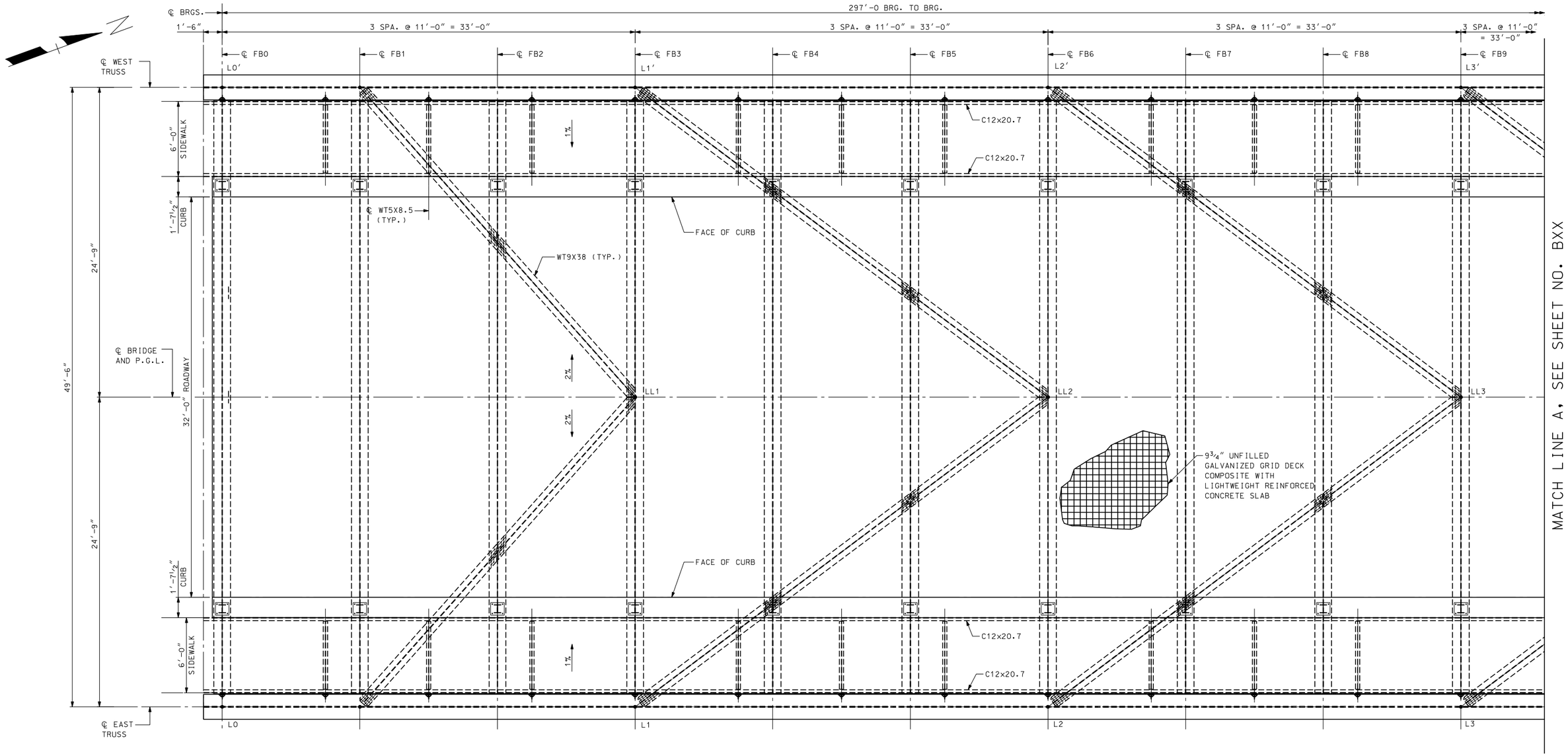

LIFT SPAN – PARTIAL DECK PLAN – 1

¼" = 1'-0"

NOTES:

1. FOR DECK JOINT DETAILS SEE BRIDGE SHEET B55.
2. FOR SIDEWALK DETAILS, SEE BRIDGE SHEET B59.
3. FOR TYPICAL LIFT SPAN DECK CROSS SECTION, SEE BRIDGE SHEET B41.
4. FOR LIFT SPAN DECK ELEVATION TABLE, SEE BRIDGE SHEET B54.

LEGEND:

L (n)	INDICATES LOWER CHORD PANEL POINT
FB (N)	INDICATES FLOORBEAMS
LL (n)	INDICATES LOWER LATERAL PANEL POINT

PRELIMINARY PLANS
SEPTEMBER 12, 2011

ARCHER WESTERN CONTRACTORS

HNTB
HNTB Corporation
The HNTB Companies
Engineers Architects Planners

SUBDIRECTORY	.DGN LOCATOR	SHEET SCALE
XX	$FILENAME$	1/4" = 1'-0"

STATE OF NEW HAMPSHIRE
DEPARTMENT OF TRANSPORTATION * BUREAU OF BRIDGE DESIGN

TOWN $TOWN$ BRIDGE NO. $BRNO$ STATE PROJECT $STNO$

LOCATION $BRDESCR$

LIFT SPAN - PARTIAL DECK PLAN - 1

REVISIONS AFTER PROPOSAL	BY	DATE		BY	DATE
DESIGNED	CSE	09/11	CHECKED	TPZ	09/11
DRAWN	SPL	09/11	CHECKED	GT	09/11
QUANTITIES	XX	XX/XX	CHECKED	XX	XX/XX

ISSUE DATE	FEDERAL PROJECT NO.	SHEET NO.
REV. DATE	XXXXXX	XX

BRIDGE SHEET: B51 OF BT
FILE NUMBER: $BRFILNO$
TOTAL SHEETS: $CSHTOT$

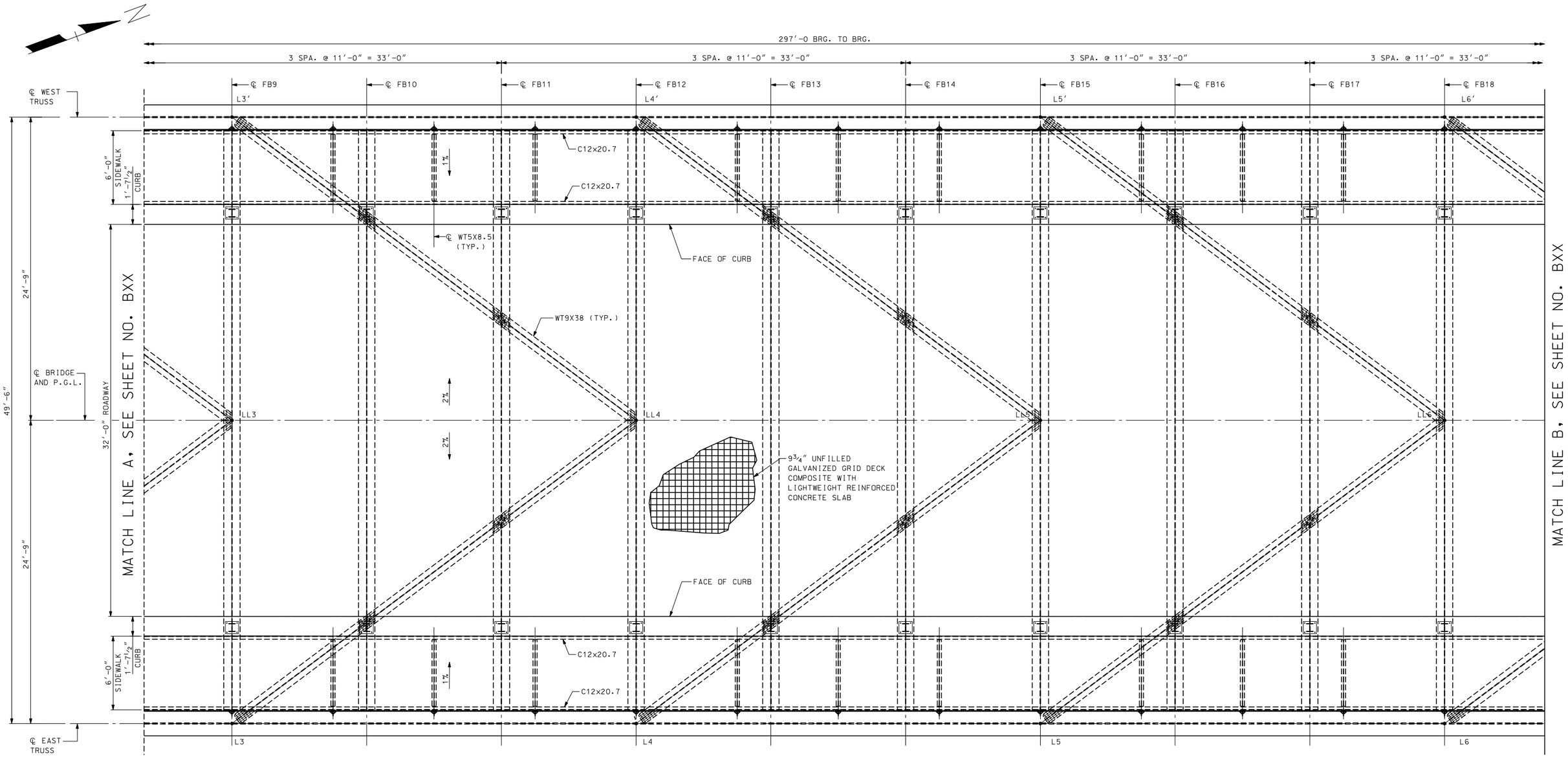

LIFT SPAN – PARTIAL DECK PLAN – 2

¼" = 1'-0"

NOTES:

1. FOR SIDEWALK DETAILS, SEE BRIDGE SHEET B59.
2. FOR TYPICAL LIFT SPAN DECK CROSS SECTION, SEE BRIDGE SHEET B41.
3. FOR LIFT SPAN DECK ELEVATION TABLE, SEE BRIDGE SHEET B54.

LEGEND:

L (n)	INDICATES LOWER CHORD PANEL POINT
FB (N)	INDICATES FLOORBEAMS
LL (n)	INDICATES LOWER LATERAL PANEL POINT

PRELIMINARY PLANS
SEPTEMBER 12, 2011

ARCHER WESTERN CONTRACTORS

HNTB
HNTB Corporation
The HNTB Companies
Engineers Architects Planners

SUBDIRECTORY	.DGN LOCATOR	SHEET SCALE
XX	$FILENAME$	1/4" = 1'-0"

STATE OF NEW HAMPSHIRE
DEPARTMENT OF TRANSPORTATION * BUREAU OF BRIDGE DESIGN

TOWN $TOWN$ BRIDGE NO. $BRNO$ STATE PROJECT $STNO$

LOCATION $BRDESCR$

LIFT SPAN - PARTIAL DECK PLAN - 2

REVISIONS AFTER PROPOSAL		BY	DATE		BY	DATE
	DESIGNED	CSE	09/11	CHECKED	TPZ	09/11
	DRAWN	SPL	09/11	CHECKED	GT	09/11
	QUANTITIES	XX	XX/XX	CHECKED	XX	XX/XX
	ISSUE DATE		FEDERAL PROJECT NO.		SHEET NO.	
	REV. DATE		XXXXXX		XX	

BRIDGE SHEET: B52 or BT
FILE NUMBER: $BRFILNO$
TOTAL SHEETS: $CSHTOT$

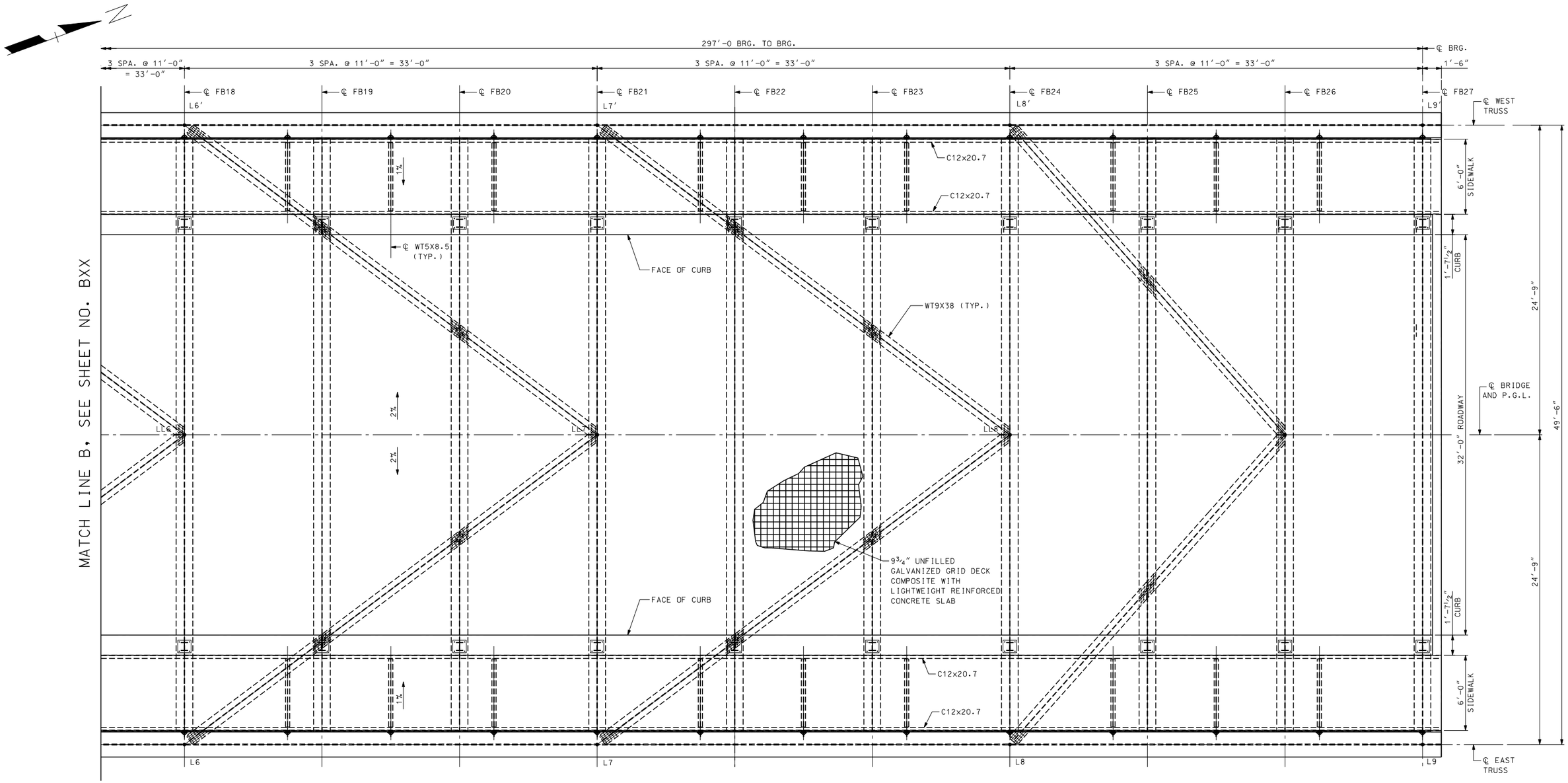

LIFT SPAN - PARTIAL DECK PLAN - 3

¼" = 1'-0"

NOTES:

1. FOR SIDEWALK DETAILS, SEE BRIDGE SHEET B59.
2. FOR TYPICAL LIFT SPAN DECK CROSS SECTION, SEE BRIDGE SHEET B41.
3. FOR LIFT SPAN DECK ELEVATION TABLE, SEE BRIDGE SHEET B54.

LEGEND:

L (n)	INDICATES LOWER CHORD PANEL POINT
FB (N)	INDICATES FLOORBEAMS
LL (n)	INDICATES LOWER LATERAL PANEL POINT

PRELIMINARY PLANS
SEPTEMBER 12, 2011

ARCHER WESTERN CONTRACTORS

HNTB
HNTB Corporation
The HNTB Companies
Engineers Architects Planners

SUBDIRECTORY	.DGN LOCATOR	SHEET SCALE
XX	$FILENAME$	1/4" = 1'-0"

STATE OF NEW HAMPSHIRE
DEPARTMENT OF TRANSPORTATION * BUREAU OF BRIDGE DESIGN

TOWN $TOWN$ BRIDGE NO. $BRNO$ STATE PROJECT $STNO$

LOCATION $BRDESCR$

LIFT SPAN - PARTIAL DECK PLAN - 3

REVISIONS AFTER PROPOSAL		BY	DATE		BY	DATE
	DESIGNED	CSE	09/11	CHECKED	TPZ	09/11
	DRAWN	SPL	09/11	CHECKED	GT	09/11
	QUANTITIES	XX	XX/XX	CHECKED	XX	XX/XX
	ISSUE DATE		FEDERAL PROJECT NO.		SHEET NO.	
	REV. DATE		XXXXXX		XX	

BRIDGE SHEET: B53 OF BT
FILE NUMBER: $BRFILNO$
TOTAL SHEETS: $CSHTOT$

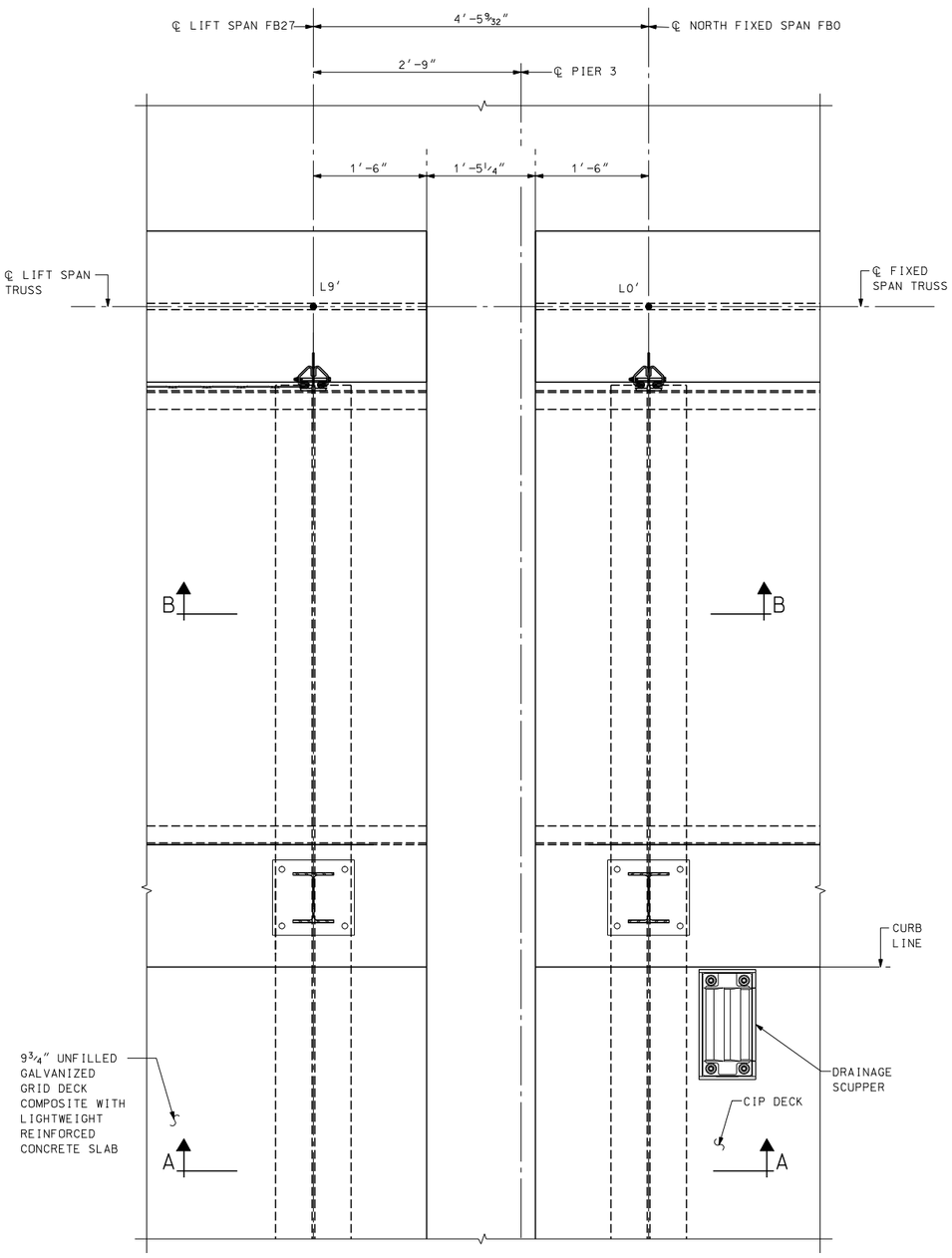

PARTIAL PLAN – ARMORED DECK JOINT AT PIER 3

(ARMORED DECK JOINT AT PIER 2 OPPOSITE HAND)

1″ = 1′-0″

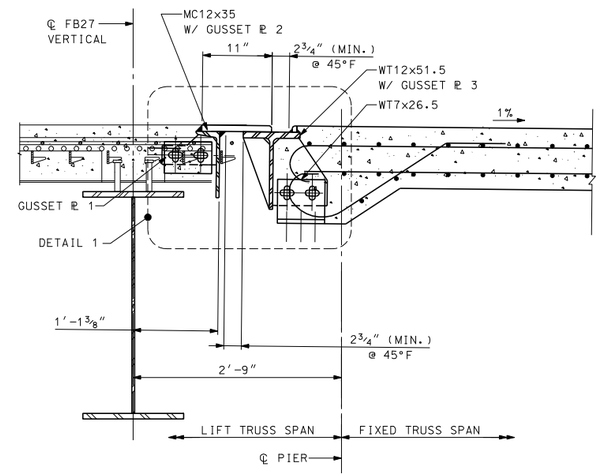

SECTION A–A

(JOINT AT PIER 3 SHOWN; JOINT AT PIER 2 OPPOSITE HAND)

1″ = 1′-0″

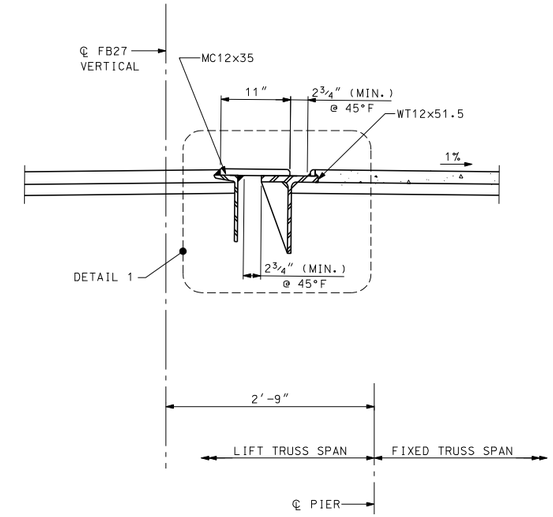

SECTION B–B

(JOINT AT PIER 3 SHOWN; JOINT AT PIER 2 OPPOSITE HAND)

1″ = 1′-0″

NOTES:

1. THE ARMORED DECK JOINT SHALL BE PAID FOR UNDER ITEM XXX.XXX.
2. ALL STRUCTURAL STEEL FOR DECK JOINT SHALL CONFORM TO ASTM A709 GRADE 50 AND GALVANIZED.

PRELIMINARY PLANS
SEPTEMBER 12, 2011

ARCHER WESTERN CONTRACTORS

HNTB
HNTB Corporation
The HNTB Companies
Engineers Architects Planners

SUBDIRECTORY	.DGN LOCATOR	SHEET SCALE
XX	$FILENAME$	1" = 1'-0"

STATE OF NEW HAMPSHIRE
DEPARTMENT OF TRANSPORTATION * BUREAU OF BRIDGE DESIGN

TOWN $TOWN$ BRIDGE NO. $BRNO$ STATE PROJECT $STNO$

LOCATION $BRDESCR$

LIFT SPAN - ARMORED DECK JOINT

REVISIONS AFTER PROPOSAL		BY	DATE		BY	DATE
	DESIGNED	CSE	09/11	CHECKED	GT	09/11
	DRAWN	JN	09/11	CHECKED	TPZ	09/11
	QUANTITIES	XX	XX/XX	CHECKED	XX	XX/XX
	ISSUE DATE		FEDERAL PROJECT NO.		SHEET NO.	
	REV. DATE		XXXXXX		XX	

BRIDGE SHEET: B55 OF BT
FILE NUMBER: $BRFILNO$
TOTAL SHEETS: $CSHTOT$