Appendix C

Condition Summary Tables and Sketches

Appendix C

Part I: Truss Spans

Section A:

Truss Condition

Legend:

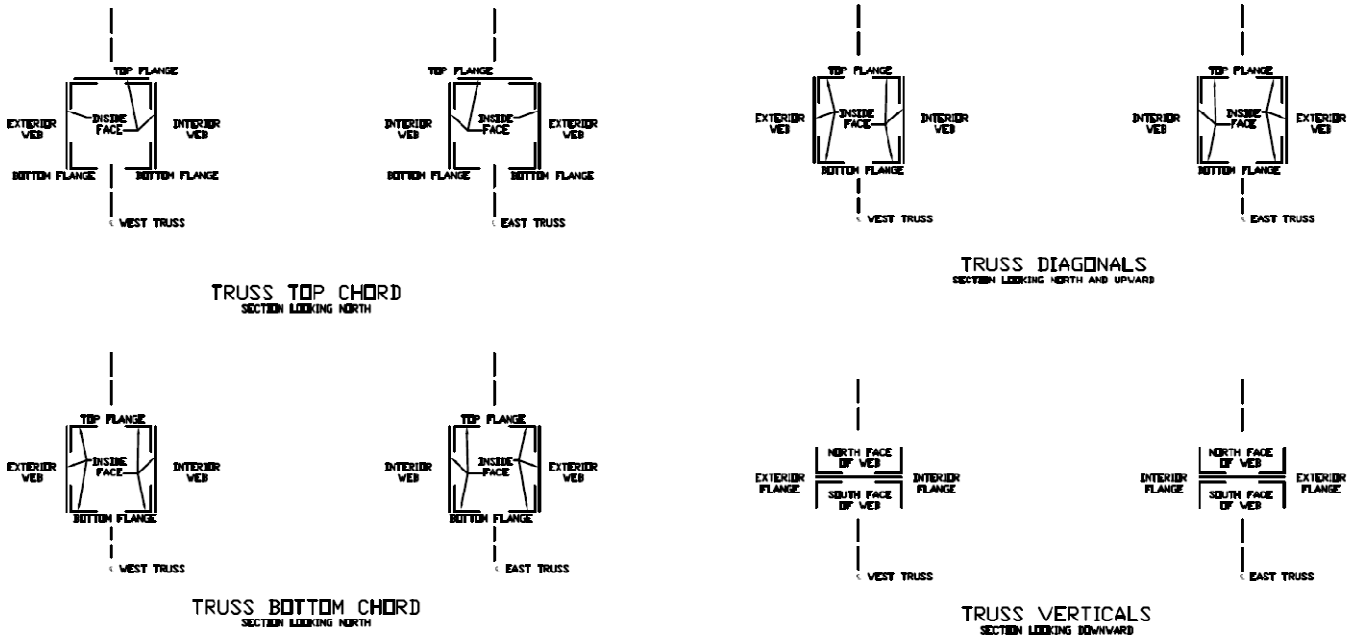

Sarah Mildred Long Bridge - Span 1

Bottom Chord

Member:	Rivet Head Condition	Lacing Bar/Batten Plate Condition	Structural Member Condition			
			Bottom flange	Top flange	Exterior Web	Interior Web
Typical Condition	Rivet heads on inside faces at Joints have up to 70% section loss. Less than 10% of rivets elsewhere have up to 20% section loss.	Surface rust on top batten plates and lacing bars..	Some surface rust on top face of horizontal legs. Laminar corrosion at joints.	Surface rust on top face, minor laminar corrosion at batten plate interfaces. Laminar corrosion at joints.	Surface rust on inside face at at joints. Isolated paint loss and surface rust on outside face.	Surface rust on inside face at at joints. Isolated paint loss on outside face and rust at less than 5% of rivet heads. Laminar corrosion at interface with gusset plates.
L2-L3 E	30% of rivets have 40% section loss.		Some surface rust on top face of horizontal legs. Laminar corrosion at joints and at splice plate.		Laminar corrosion on splice plate.	Laminar corrosion on splice plate.
L4-L5 W					Laminar corrosion on 30% of outside face surface area.	Laminar corrosion on bottom 6" of web at L5.
L6-L7 E		Laminar corrosion on batten plate at L7.				
L7-L8 W		Laminar corrosion on batten plate at L7.	Laminar corrosion at Batten plate at L7.			
L7-L8 E		Laminar corrosion on batten plate at L8 and L7.		Laminar corrosion at batten plates.		

Sarah Mildred Long Bridge - Span 1

Top Chord

Member:	Rivet Head Condition	Lacing Bar/Batten Plate Condition	Structural Member Condition			
			Bottom flange	Top flange	Exterior Web	Interior Web
Typical Condition	Surface rust on some inside face rivet heads.	Surfce rust on topside of bottom lacing bars and batten plates.	Surface rust on inside face of both legs, both sides.	Minor paint scaling with some surface rust on inside face.	Minor paint scaling with some surface rust on inside face.	Minor paint scaling with some surface rust on inside face.
U0-U1 W		Batten plate prying at U1.	Pack rust and prying at batten plate at U1.		Pack rust between web and bottom flange with prying.	Pack rust between web and bottom flange with prying.
U0-U1 E		Batten plate prying at U1.	Pack rust and prying at batten plate at U1.		Pack rust between web and bottom flange with prying.	Pack rust between web and bottom flange with prying.
U5-U6 W		Batten plate prying at U5.				
U7-U8 W		Batten plate prying at U7.	Pack rust and prying at batten plate at U7.			Pack rust between web and bottom flange with prying.
U7-U8 E		Batten plate prying at U7.	Pack rust and prying at batten plate at U7.		Pack rust between web and bottom flange with prying.	Pack rust between web and bottom flange with prying.

Note: Members not listed and member components left blank are similar to the Typical Condition listed.

Sarah Mildred Long Bridge - Span 1

Diagonals

Member:	Rivet Head Condition	Lacing Bar/Batten Plate Condition	Structural Member Condition			
			Bottom flange	Top flange	Exterior Web	Interior Web
Typial Condition	Paint loss and surface rust on less than 30% of rivet heads.	Top lacing bars/batten plates rusted with laminar corrosion on less than 5% of area.	Surface rust on top side of flange.	Surface rust at lacing bar interface.	Some paint loss and surface rust - less than 10% of surface	Some paint loss and surface rust - less than 5% of surface
L0-U1 W	Rivet heads at bottom batten plate up to 40% section loss.	Bottom batten plate heavily deteriorated with corrosion holes. Lacing bars rusted.		Laminar corrosion at lacing bar interface.	Laminar corrosion on inside face of web.	Laminar corrosion on inside face of web.
L0-U1 E		Lacing bars rusted				Laminar corrosion on inside face of web.
U3-L4 W					Laminar corrosion at interface with gusset plate at L4.	
L4-U5 W		Laminar corrosion on lacing bars throughout. Laminar corrosion on bottom batten plate at L4.	Laminar corrosion at batten plate at L4.		Laminar corrosion on 50% of surface of ourside face of web and at interface with gusset at L4.	
L6-U7 E		Batten plates rusted with laminar corrosion. Batten plate at L6 has 1" corrosion hole.			Laminar corrosion on outside face of web at L6.	
U7-L8 W		Laminar corrosion on lacing bars throughout. Pitting on top batten plate at U7. Laminar corrosion on bttom batten plate at L8.			Laminar corrosion on outside face of web.	

Note: Members not listed and member components left blank are similar to the Typical Condition listed.

Sarah Mildred Long Bridge - Span 1

Verticals

Member:	Rivet Head Condition	Lacing Bar/Batten Plate Condition	Structural Member Condition			
			North face of web	South face of web	Exterior Flange	Interior Flange
Typical Condition - Box shaped	Up to 20% section loss on less than 10% of rivet heads.	Surface rust on less than 10% of lacing bars. Surface rust on bottom batten plate.	Laminar corrosion at interface with splice plate inside of lower panel point. Minor paint scaling and rust inside of upper panel point.	Laminar corrosion at interface with splice plate inside of lower panel point. Minor paint scaling and rust inside of upper panel point.	Surface rust on less than 5% of surface area.	Pack rust between vertical and Roadyway Floorbeam knee brace at bottom of knee brace.
Typical Condition - I shaped	Rivet heads at splice plate inside of lower panel point have paint loss and surface rust.	N/A	Surface rust on less than 5% of surface area. Rusted around splice plate in area between lower gusset plates.	Surface rust on less than 5% of surface area. Rusted around splice plate in area between lower gusset plates.	Surface rust on less than 5% of surface area.	Pack rust between vertical and Roadyway Floorbeam knee brace at bottom of knee brace. Surface rust on less than 5% of surface area.
L0-U0 W			Laminar corrosion at L0	Laminar corrosion at L0		
L2-U2 E		Laminar corrosion on lacing bars near top gusset plate.	Laminar corrosion at interface of top two lacing bars.			
L3-U3 E					Laminar corrosion at interface with gusset plate at L3.	
L4-U4 W					Laminar corrosion at interface with gusset plate at L4.	
L4-U4 E					Laminar corrosion at interface with gusset plate at L4.	
L5-U5 W					Pack rust between web and flange.	
L6-U6 W					Laminar corrosion at lacing bar interface.	
L7-U7 E					Pack rust at connection to top batten plate.	Pack rust at connection to top batten plate.
L8-U8 E					Laminar corrosion near L8. Pack rust with prying at gusset U8.	

Note: Members not listed and member components left blank are similar to the Typical Condition listed.

Sarah Mildred Long Bridge - Span 2

Bottom Chord

Member:	Rivet Head Condition	Lacing Bar/Batten Plate Condition	Structural Member Condition			
			Bottom flange	Top flange	Exterior Web	Interior Web
Typical Condition	Rivet heads on inside faces at Joints have up to 70% section loss. Less than 10% of rivets elsewhere have up to 20%	Surface rust on top batten plates and lacing bars..	Some surface rust on top face of horizontal legs. Laminar corrosion at joints.	Surface rust on top face, minor laminar corrosion at batten plate interfaces. Laminar corrosion at joints.	Surface rust on inside face at at joints. Isolated paint loss and surface rust on outside face.	Surface rust on inside face at at joints. Isolated paint loss on outside face and rust at less than 5% of rivet heads. Laminar corrosion at interface with gusset plates.
L0-L1 W		Laminar corrosion on all batten plates.	Laminar corrosion on top of horizontal leg.	Surface rust on top face throughout. Laminar corrosion at interface with batten plates.	Laminar corrosion at L0 - 1/8" section loss.	
L1-L2 W	40% of rivet heads connecting bottom batten plates to bottom flange have 70% section loss.					
L2-L3 W		Pack rust on bottom batten plate.			Surface rust at 20% of rivet heads throughout.	Laminar corrosion on bottom 3" of web at L3.
L3-L4 W	Rivet heads connecting bottom batten plate to bottom flange at L3 have 70% loss.	All bottom batten plates deteriorated.				
L4-L5 W					Surface rust at 30% of rivet heads throughout. Paint failure with rust at middle 1" of web, full length. Appears to be scraped, but no gouges or other damage sustained by steel.	
L5-L6 W					Surface rust at 30% of rivet heads throughout. Paint failure with rust at middle 1" of web, full length. Appears to be scraped, but no gouges or other damage sustained by steel.	
L6-L7 E		Bottom lacing bars have pack rust at bottom flange interface.				
L7-L8 E		Laminar corrosion on bottom lacing bars.	Pack rust between bottom flanges and webs for 10' from L8.		Laminar corrosion full height at interface with gusset L8 and on inside face at joint L8.	Laminar corrosion on inside face at joint L8.

Note: Members not listed and member components left blank are similar to the Typical Condition listed.

Sarah Mildred Long Bridge - Span 2

Top Chord

Member:	Rivet Head Condition	Lacing Bar/Batten Plate Condition	Structural Member Condition			
			Bottom flange	Top flange	Exterior Web	Interior Web
Typical Condition	Surface rust on some inside face rivet heads.	Surfce rust on topside of bottom lacing bars and batten plates.	Surface rust on inside face of both legs, both sides.	Minor paint scaling with some surface rust on inside face.	Minor paint scaling with some surface rust on inside face.	Minor paint scaling with some surface rust on inside face.
U0-U1 W		Pack rust with prying at batten plate at U1.	Pack rust at batten plate at U1.			Pack rust with prying between bottom flange and web.
U0-U1 E		Pack rust with prying at batten plate at U1.	Pack rust at batten plate at U1.			
U2-U3 W		Pack rust with prying at batten plate at U3.	Pack rust at batten plate at U3		.....	
U2-U3 E		Pack rust with prying at batten plate at U3.	Pack rust at batten plate at U3			
U3-U4 W		Pack rust with prying at batten plate at U4.	Pack rust at batten plate at U4			
U3-U4 E		Pack rust with prying between flange and batten plate at U3.	Pack rust with prying between flange and batten plate at U3.			
U4-U5 W		Pack rust with prying at batten plate at U5.	Pack rust with prying at batten plate at U5.			
U4-U5 E		Pack rust with prying at batten plate at U5.	Pack rust with prying at batten plate at U5.			
U7-U8 W					Pack rust with prying between bottom flange and web.	
U7-U8 E				Surface rust on inside face at U8. Pack rust between top flange and web plate.		Pack rust with prying between bottom flange and web. Heavy laminar corrosion on web at U8.

Note: Members not listed and member components left blank are similar to the Typical Condition listed.

Sarah Mildred Long Bridge - Span 2

Diagonals

Member:	Rivet Head Condition	Lacing Bar/Batten Plate Condition	Structural Member Condition			
			Bottom flange	Top flange	Exterior Web	Interior Web
Typial Condition	Paint loss and surface rust on less than 30% of rivet heads.	Top lacing bars/batten plates rusted with laminar corrosion on less than 5% of area.	Surface rust on top side of flange.	Surface rust at lacing bar interface.	Some paint loss and surface rust - less than 10% of surface	Some paint loss and surface rust - less than 5% of surface
L0-U1 W		Laminar corrosion full height on lower half of diagonal.			Laminar corrosion full height on lower half of diagonal.	Laminar corrosion at lower gusset plate.
L0-U1 E		Pack rust with prying between batten plate and bottom chord at U1.	Rust on inside face.	Pack rust with prying between batten plate and bottom chord at U1.		
L2-U3 E		Laminar corrosion on ltop lacing bars.				
U3-L4 W		Laminar corrosion on lower batten plate.			Laminar corrosion at full height interface with lower gusset.	
L4-U5 W		Bottom batten plate at lower gusset severely deteriorated with corrosion holes.			Laminar corrosion on lower half of diagaonal. Laminar corrosion full height at interface with lower gusset.	
L6-U7 W		Two top batten plates at L6 have heavy laminar corrosion.				
U7-L8 W		Bottom batten plate at L8 deteriorated with corrosion hole.				
U7-L8 E		Top batten plate at L8 deteriorated with corrosion holes.			Laminar corrosion full height at interface with lower gusset.	

Note: Members not listed and member components left blank are similar to the Typical Condition listed.

Sarah Mildred Long Bridge - Span 2

Verticals

Member:	Rivet Head Condition	Lacing Bar/Batten Plate Condition	Structural Member Condition			
			North face of web	South face of web	Exterior Flange	Interior Flange
Typical Condition - Box shaped	Up to 20% section loss on less than 10% of rivet heads.	Surface rust on less than 10% of lacing bars. Surface rust on bottom batten plate.	Laminar corrosion at interface with splice plate inside of lower panel point. Minor paint scaling and rust inside of upper panel point.	Laminar corrosion at interface with splice plate inside of lower panel point. Minor paint scaling and rust inside of upper panel point.	Surface rust on less than 5% of surface area.	Pack rust between vertical and Roadyway Floorbeam knee brace at bottom of knee brace.
Typical Condition - I shaped	Rivet heads at splice plate inside of lower panel point have paint loss and surface rust.	N/A	Surface rust on less than 5% of surface area. Rusted around splice plate in area between lower gusset plates.	Surface rust on less than 5% of surface area. Rusted around splice plate in area between lower gusset plates.	Surface rust on less than 5% of surface area.	Pack rust between vertical and Roadyway Floorbeam knee brace at bottom of knee brace. Surface rust on less than 5% of surface area.
L0-U0 W		Section loss with corrosion holes on bottom two batten plates.				
L1-U1 W					Laminar corrosion at interface with lower gusset plate.	
L1-U1 E					Pack rust with prying at gusset U1.	
L2-U2 W						Minimal pack rust between flange and upper gusset plate.
L2-U2 E		Bottom two batten plates on south face deteriorated with corrosion holes.		Laminar corrosion around splice plate inside of gusset L2.		
L3-U3 E					Pack rust with prying at gusset L3.	
L4-U4 W				Laminar corrosion inside of lower gusset.	Pack rust at interface with top gusset plate.	
L7-U7 W					Laminar corrosion between flange and lower gusset plate. Surface rust at connection to operator house support.	
L7-U7 E						
L8-U8 W			2"x6" corrosion hole in web splice plate inside of gusset at L8. Laminar corrosion around 50% of rivets in lower half of vertical.	2"x6" corrosion hole in web splice plate inside of gusset at L8. Laminar corrosion around 50% of rivets in lower half of vertical.		
L8-U8 E					Laminar corrosion on 20% of surface for full height.	Laminar corrosion on 20% of surface for full height.

Note: Members not listed and member components left blank are similar to the Typical Condition listed.

Sarah Mildred Long Bridge - Span 3
Bottom Chord

Member:	Rivet Head Condition	Lacing Bar/Batten Plate Condition	Structural Member Condition			
			Bottom flange	Top flange	Exterior Web	Interior Web
Typical Condition	Rivet heads on inside faces at Joints have up to 70% section loss. Less than 10% of rivets elsewhere have up to 20%	Surface rust on top batten plates and lacing bars..	Some surface rust on top face of horizontal legs. Laminar corrosion at joints.	Surface rust on top face, minor laminar corrosion at batten plate interfaces. Laminar corrosion at joints.	Surface rust on inside face at at joints. Isolated paint loss and surface rust on outside face.	Surface rust on inside face at at joints. Isolated paint loss on outside face and rust at less than 5% of rivet heads. Laminar corrosion at interface with gusset plates.
L2-L3 W		Pack rust between bottom flange and batten plate near L2.			Paint loss and surface rust at splice plate.	
L5-L6 E				Laminar corrosion at batten plate interface.		

Note: Members not listed and member components left blank are similar to the Typical Condition listed.

Sarah Mildred Long Bridge - Span 3

Top Chord

Member:	Rivet Head Condition	Lacing Bar/Batten Plate Condition	Structural Member Condition			
			Bottom flange	Top flange	Exterior Web	Interior Web
Typical Condition	Surface rust on some inside face rivet heads.	Surfce rust on topside of bottom lacing bars and batten plates.	Surface rust on inside face of both legs, both sides.	Minor paint scaling with some surface rust on inside face.	Minor paint scaling with some surface rust on inside face.	Minor paint scaling with some surface rust on inside face.
U0-U1 W					Pack rust with prying between web and bottom flange at U1.	
U0-U1 E						Pack rust with prying between web and bottom flange.
U2-U3 W		Pack rust with prying between batten plate and bottom chord at U3.				
U2-U3 E		Pack rust with prying between batten plate and bottom chord at U3.				
U3-U4 W					Laminar corrosion on inside face of web.	Laminar corrosion on inside face of web.
U3-U4 E		Pack rust with prying between batten plate and bottom chord at U3.				
U4-U5 E		Pack rust with prying between batten plate and bottom chord at U5.				
U5-U6 W		Pack rust with prying between batten plate and bottom chord at U5.				
U5-U6 E		Pack rust with prying between batten plate and bottom chord at U5.				
U7-U8 W					Pack rust is causing prying on bottom 3" of web over middle third of member.	
U7-U8 E		Pack rust with prying between batten plate and bottom chord at U7.				

Note: Members not listed and member components left blank are similar to the Typical Condition listed.

Sarah Mildred Long Bridge - Span 3

Diagonals

Member:	Rivet Head Condition	Lacing Bar/Batten Plate Condition	Structural Member Condition			
			Bottom flange	Top flange	Exterior Web	Interior Web
Typial Condition	Paint loss and surface rust on less than 30% of rivet heads.	Top lacing bars/batten plates rusted with laminar corrosion on less than 5% of area.	Surface rust on top side of flange.	Surface rust at lacing bar interface.	Some paint loss and surface rust - less than 10% of surface	Some paint loss and surface rust - less than 5% of surface
L2-U3 W		Pack rust between bottom flange and batten plate at U3.				
U7-L8 W		Laminar corrosion on top lacing bars over bottom 25' of the diagonal.				
U7-L8 E					Surface rust on entire web height for 6' from gusset L8. Spot surface rust on the rest of the web.	

Sarah Mildred Long Bridge - Span 3

Verticals

Member:	Rivet Head Condition	Lacing Bar/Batten Plate Condition	Structural Member Condition			
			North face of web	South face of web	Exterior Flange	Interior Flange
Typical Condition - Box shaped	Up to 20% section loss on less than 10% of rivet heads.	Surface rust on less than 10% of lacing bars. Surface rust on bottom batten plate.	Laminar corrosion at interface with splice plate inside of lower panel point. Minor paint scaling and rust inside of upper panel point.	Laminar corrosion at interface with splice plate inside of lower panel point. Minor paint scaling and rust inside of upper panel point.	Surface rust on less than 5% of surface area.	Pack rust between vertical and Roadyway Floorbeam knee brace at bottom of knee brace.
Typical Condition - I shaped	Rivet heads at splice plate inside of lower panel point have paint loss and surface rust.	N/A	Surface rust on less than 5% of surface area. Rusted around splice plate in area between lower gusset plates.	Surface rust on less than 5% of surface area. Rusted around splice plate in area between lower gusset plates.	Surface rust on less than 5% of surface area.	Pack rust between vertical and Roadyway Floorbeam knee brace at bottom of knee brace. Surface rust on less than 5% of surface area.
L0-U0 E		Laminar corrosion at lifting diagonal support.	Laminar corrosion inside of lower gusset.			
L2-U2 W		Laminar corrosion on lacing bars over bottom half of vertical.				
L5-U5 W					Pack rust between flange and lower gusset plate.	Pack rust between flange and lower gusset plate.
L6-U6 E			Laminar corrosion around splice plate at lower gusset.			
L8-U8 W		Laminar corrosion on batten plate at lifting diagonal. Lamianr corrosion on lacing bars.			Laminar corrosion at lifting diagaonal.	
L8-U8 E		Laminar corrosion on batten plate at lifting diagonal. Lamianr corrosion on lacing bars.			Laminar corrosion at lifting diagaonal.	

Note: Members not listed and member components left blank are similar to the Typical Condition listed.

Sarah Mildred Long Bridge - Span 4
Bottom Chord

Member:	Rivet Head Condition	Lacing Bar/Batten Plate Condition	Structural Member Condition			
			Bottom flange	Top flange	Exterior Web	Interior Web
Typical Condition	Rivet heads on inside faces at Joints have up to 70% section loss. Less than 10% of rivets elsewhere have up to 20%	Surface rust on top batten plates and lacing bars..	Some surface rust on top face of horizontal legs. Laminar corrosion at joints.	Surface rust on top face, minor laminar corrosion at batten plate interfaces. Laminar corrosion at joints.	Surface rust on inside face at at joints. Isolated paint loss and surface rust on outside face.	Surface rust on inside face at at joints. Isolated paint loss on outside face and rust at less than 5% of rivet heads. Laminar corrosion at interface with gusset plates.
L0-L1 W		Laminar corrosion throughout bottom lacing bars. Laminar corrosion on splice plate at L1. Steel angle connecting chord splice to vertical web has 100% section loss.				
L1-L2 W		Laminar corrosion throughout top and bottom lacing bars.		Laminar corrosion at lacing bar interface.		
L1-L2 E		Laminar corrosion throughout bottom lacing bars.				
L2-L3 W		Pack rust with prying at L3.				
L3-L4 W	Top flange rivet heads have 50% section loss throughout.	Bottom batten plate at L3 heavily deteriorated with corrosion holes. Top batten plates deteriorated throughout.			Surface rust on 20% of outside face. Laminar corrosion with prying on inside face at interface with flanges.	Laminar corrosion with prying on inside face at interface with flanges.
L3-L4 E					Laminar corrosion on inside face adjacent to L4.	
L5-L6 W				Pack rust with prying between exterior web and flange.		
L5-L6 E			Laminar corrosion over full width at batten plate.	Surface rust throughout. Laminar corrosion at batten plate interface.	Surface rust on 30% of surface.	
L6-L7 E			Laminar corrosion at batten plate.			
L7-L8 W				Surface rust full length. Laminar corrosion at gusset plate interface.	Pack rust with prying between top flange and web.	

Note: Members not listed and member components left blank are similar to the Typical Condition listed.

Sarah Mildred Long Bridge - Span 4

Top Chord

Member:	Rivet Head Condition	Lacing Bar/Batten Plate Condition	Structural Member Condition			
			Bottom flange	Top flange	Exterior Web	Interior Web
Typical Condition	Surface rust on some inside face rivet heads.	Surfce rust on topside of bottom lacing bars and batten plates.	Surface rust on inside face of both legs, both sides.	Minor paint scaling with some surface rust on inside face.	Minor paint scaling with some surface rust on inside face.	Minor paint scaling with some surface rust on inside face.
U0-U1 W				Pack rust on top flange adjacent to U0.	Pack rust with prying between bottom flange and web for full length.	Pack rust with prying between bottom flange and web for full length.
U0-U1 E					Pack rust with prying between bottom flange and web for full length.	Pack rust with prying between bottom flange and web for full length.
U2-U3 W					Additional hole drilled for barrier support connection.	
U2-U3 E						Pack rust between splice plate and web at U3.
U3-U4 W						Pack rust between splice plate and web at U3.
U3-U4 E					Pack rust on splice plate at U3.	
U4-U5 E						Pack rust with prying between web and splice plate at U5.
U5-U6 W		Pack rust and prying between bottom flange and batten plate at U5.				
U7-U8 W		Pack rust and prying between bottom flange and batten plate at U7.			Pack rust with prying between bottom flange and web.	
U7-U8 E		Pack rust and prying between bottom flange and batten plate at U8.			Pack rust between web and bottom flange with prying over full width.	Pack rust between web and bottom flange with prying over full width.

Note: Members not listed and member components left blank are similar to the Typical Condition listed.

Sarah Mildred Long Bridge - Span 4

Diagonals

Member:	Rivet Head Condition	Lacing Bar/Batten Plate Condition	Structural Member Condition			
			Bottom flange	Top flange	Exterior Web	Interior Web
Typial Condition	Paint loss and surface rust on less than 30% of rivet heads.	Top lacing bars/batten plates rusted with laminar corrosion on less than 5% of area.	Surface rust on top side of flange.	Surface rust at lacing bar interface.	Some paint loss and surface rust - less than 10% of surface	Some paint loss and surface rust - less than 5% of surface
U1-L2 W					Some paint loss and surface rust on 20% of surface area.	
U3-L4 W		Bottom batten plate at L4 deteriorated with corrosion holes. Top lacing bars have laminar corrosion throughout.			Laminar corrosion on end 3' of diagonal at L4.	
U3-L4 E		Laminar corrosion on top lacing bars, full length.				
U5-L6 W		Pack rust with prying between bottom flange and batten plate at midspan.				
U7-L8 W		Bottom batten plates and lacing bars are rusted throughout.			Laminar corrosion on inside face at L8. Pack rust between web and bottom flange over 8" length from gusset L8.	Laminar corrosion on inside face at L8.
U7-L8 E		Bottom batten plates and lacing bars are rusted throughout.				

Note: Members not listed and member components left blank are similar to the Typical Condition listed.

Sarah Mildred Long Bridge - Span 4

Verticals

Member:	Rivet Head Condition	Lacing Bar/Batten Plate Condition	Structural Member Condition			
			North face of web	South face of web	Exterior Flange	Interior Flange
Typical Condition - Box shaped	Up to 20% section loss on less than 10% of rivet heads.	Surface rust on less than 10% of lacing bars. Surface rust on bottom batten plate.	Laminar corrosion at interface with splice plate inside of lower panel point. Minor paint scaling and rust inside of upper panel point.	Laminar corrosion at interface with splice plate inside of lower panel point. Minor paint scaling and rust inside of upper panel point.	Surface rust on less than 5% of surface area.	Pack rust between vertical and Roadyway Floorbeam knee brace at bottom of knee brace.
Typical Condition - I shaped	Rivet heads at splice plate inside of lower panel point have paint loss and surface rust.	N/A	Surface rust on less than 5% of surface area. Rusted around splice plate in area between lower gusset plates.	Surface rust on less than 5% of surface area. Rusted around splice plate in area between lower gusset plates.	Surface rust on less than 5% of surface area.	Pack rust between vertical and Roadyway Floorbeam knee brace at bottom of knee brace. Surface rust on less than 5% of surface area.
L1-U1 W					Pack rust between flange and gusset plate at L1.	
L3-U3 W					Laminar corrosion at gusset L3 interface. Pack rust between flange and gusset plate.	
L3-U3 E					Isolated laminar corrosion in 6"x6" area.	
L4-U4 W					Laminar corrosion on bottom 12" at L4. Pack rust with prying at U4.	
L5-U5 W					Pack rust with prying between flange and gusset late at L5.	
L8-U8 E					Pack rust with prying between flange and gusset late at U8.	

Note: Members not listed and member components left blank are similar to the Typical Condition listed.

Sarah Mildred Long Bridge - Span 5
Bottom Chord

Member:	Rivet Head Condition	Lacing Bar/Batten Plate Condition	Structural Member Condition			
			Bottom flange	Top flange	Exterior Web	Interior Web
Typical Condition	Rivet heads on inside faces at Joints have up to 70% section loss. Less than 10% of rivets elsewhere have up to 20%	Surface rust on top batten plates and lacing bars..	Some surface rust on top face of horizontal legs. Laminar corrosion at joints.	Surface rust on top face, minor laminar corrosion at batten plate interfaces. Laminar corrosion at joints. Power line supports welded to top flange.	Surface rust on inside face at at joints. Isolated paint loss and surface rust on outside face.	Surface rust on inside face at at joints. Isolated paint loss on outside face and rust at less than 5% of rivet heads. Laminar corrosion at interface with gusset plates.
L0-L1 W		Laminar corrosion on batten plate at L0, with rivet head section loss.			Laminar corrosion at interface with gusset L0. Laminar corrosion on less than 10% of web area.	
L0-L1 E		Laminar corrosion on batten plates.				
L1-L2 W		Laminar corrosion on top and bottom batten plates at L1.				
L1-L2 E		Laminar corrosion on top batten plates at L1.	Laminar corrosion on top face at gusset.		Surface rust on 30% of surface area.	
L2-L3 W		Pack rust with prying between splice plate and top flange as well as bottom flange.	Laminar corrosion at batten plates.			
L2-L3 E		Pack rust with prying between splice plate and top flange.		Pack rust at splice plate.		
L3-L4 W		Laminar corrosion with up to 100% section loss in four bottom batten plates and three top batten plates	Laminar corrosion over full length.	Laminar corrosion at batten plates.	Surface rust on 10% of surface.	
L5-L6 W			Pack rust between bottom splice plate and bottom flange.			
L5-L6 E				Laminar corrosion and prying between flange and batten plate.	Surface rust on 20% of surface at splice plate.	
L7-L8 W		Toip and bottom batten plates at L7 deteriorated.			Laminar corrosion at several rivets and at interface with gusset L8.	
L7-L8 E		Laminar corrosion on batten plates throughout.	Laminar corrosion on top face.		Surface rust on 30% of surface throughout.	

Note: Members not listed and member components left blank are similar to the Typical Condition listed.

Sarah Mildred Long Bridge - Span 5

Top Chord

Member:	Rivet Head Condition	Lacing Bar/Batten Plate Condition	Structural Member Condition			
			Bottom flange	Top flange	Exterior Web	Interior Web
Typical Condition	Surface rust on some inside face rivet heads.	Surfce rust on topside of bottom lacing bars and batten plates.	Surface rust on inside face of both legs, both sides.	Minor paint scaling with some surface rust on inside face.	Minor paint scaling with some surface rust on inside face.	Minor paint scaling with some surface rust on inside face.
U0-U1 W			Pack rust with prying between splice plate and bottom flange.		Pack rust with prying between web and bottom flange.	
U2-U3 W		Pack rust between batten plate and bottom flange at U3.				
U3-U4 W						Minor pack rust between web and bottom flange.
U3-U4 E					Pack rust with prying between web and splice plate at U3.	
U4-U5 W						Minor pack rust between web and bottom flange.
U4-U5 E					Pack rust between web and bottom flange.	
U5-U6 W		Laminar corrosion between batten plate and bottom flange at U5.				
U7-U8 E		Laminar corrosion on batten plates throughout.			Pack rust with prying between web and bottom flange.	

Note: Members not listed and member components left blank are similar to the Typical Condition listed.

Sarah Mildred Long Bridge - Span 5

Diagonals

Member:	Rivet Head Condition	Lacing Bar/Batten Plate Condition	Structural Member Condition			
			Bottom flange	Top flange	Exterior Web	Interior Web
Typial Condition	Paint loss and surface rust on less than 30% of rivet heads.	Top lacing bars/batten plates rusted with laminar corrosion on less than 5% of area.	Surface rust on top side of flange.	Surface rust at lacing bar interface.	Some paint loss and surface rust - less than 10% of surface	Some paint loss and surface rust - less than 5% of surface
L0-U1 W		Pack rust with prying between bottom flange and bottom flange.			Laminar corrosion on inside face at L0. Laminar corrosion at rivets over 2' from L0.	Laminar corrosion on inside face at L0.
L0-U1 E		Top batten plate at L0 corroded with corrosion holes.			Laminar corrosion at interface with gusset L0.	
U3-L4 W		Laminar corrosion on top lacing bars. Laminar corrosion on bottom lacing bars and batten plate adjacent to L4.			Pack rust between web plate and splice plate at U3. Laminar corrosion on less than 5% of surface area.	Pack rust between web plate and splice plate at U3.
L6-U7 E		Laminar corrosion on batten plate at L6.				
U7-L8 W					Pack rust between web and barrier support connection.	

Note: Members not listed and member components left blank are similar to the Typical Condition listed.

Sarah Mildred Long Bridge - Span 5

Verticals

Member:	Rivet Head Condition	Lacing Bar/Batten Plate Condition	Structural Member Condition			
			North face of web	South face of web	Exterior Flange	Interior Flange
Typical Condition - Box shaped	Up to 20% section loss on less than 10% of rivet heads.	Surface rust on less than 10% of lacing bars. Surface rust on bottom batten plate.	Laminar corrosion at interface with splice plate inside of lower panel point. Minor paint scaling and rust inside of upper panel point.	Laminar corrosion at interface with splice plate inside of lower panel point. Minor paint scaling and rust inside of upper panel point.	Surface rust on less than 5% of surface area.	Pack rust between vertical and Roadyway Floorbeam knee brace at bottom of knee brace.
Typical Condition - I shaped	Rivet heads at splice plate inside of lower panel point have paint loss and surface rust.	N/A	Surface rust on less than 5% of surface area. Rusted around splice plate in area between lower gusset plates.	Surface rust on less than 5% of surface area. Rusted around splice plate in area between lower gusset plates.	Surface rust on less than 5% of surface area.	Pack rust between vertical and Roadyway Floorbeam knee brace at bottom of knee brace. Surface rust on less than 5% of surface area.
L0-U0 W		Two bottom batten plates are deteriorated with corrosion holes.			Laminar corrosion on 10% of surface.	
L0-U0 E					Laminar corrosion at interface with lower gusset plate.	
L1-U1 W					Pack rust with prying between flange and upper gusset plate. Laminar corrosion at interface with lower gusset plate.	
L2-U2 W						Pack rust with prying between flange and gusset L1.
L3-U3 W					Laminar corrosion at gusset L3 interface.	
L4-U4 W		Laminar corrosion on batten plate at L4.				
L4-U4 E		Laminar corrosion on batten plate at L4.			3"x1" hole on web at L4. Area around hole has 50% section loss - 4"x2".	
L6-U6 W		Pack rust between lacing bars and flange. Laminar corrosion on batten plate at L6.				
L6-U6 E		Pack rust between batten plate and bottom flange.				
L7-U7 W		One lacing bar removed.			Pack rust with prying at lower gusset plate.	Pack rust with prying at lower gusset plate.
L8-U8 E		Top batten plate distorted due to pack rust.				

Note: Members not listed and member components left blank are similar to the Typical Condition listed.

Section B:

Gusset Plate Condition

Legend:

SR – Pitting

Lam Corr – Laminar Corrosion

Project: SM Long Bridge	Computed: JFM	Date: 7-20-09	
Subject: Gusset PL's	Checked:	Date:	
Task:	Page: 1	of: 17	
Job #:	No:		

HDR | ONE COMPANY *Many Solutions*℠

Sarah Long Bridge

Gusset L0 and L8 deterioration - Fixed Truss Spans

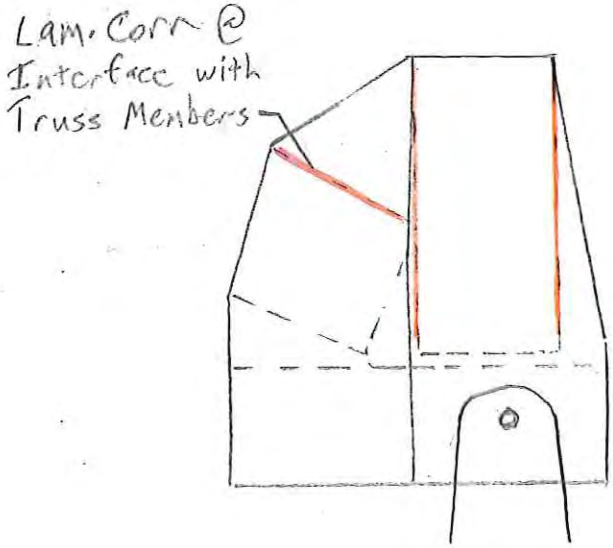

Minor Laminar Corrosion on Gusset surface. See below for % of surface area

Exterior Gusset Plate
Spans 1, 2, 4, 5
(Interior similar)

10% of surface area - minor Lam Corr:
Span 1: all L0/L8
Span 2: L0E, L8W, L8E
Span 3: L0W, L0E, L8E
Span 5: L0E

20% of surface area - minor Lam Corr:
Span 2: L0W
Span 4: L8W
Span 5 L0W, L8W, L8E

Sarah Long Bridge

Gusset L0 and L8 deterioration - Lift Span

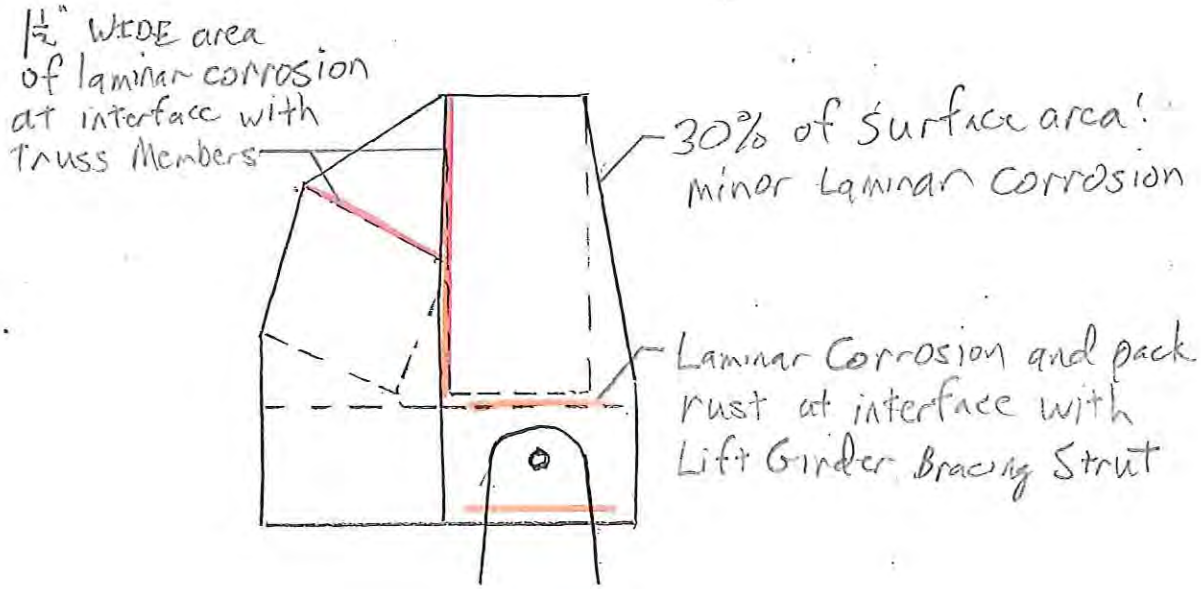

Span 3, L0/L8
Exterior Gusset

Interior Gussets similar except for corrosion at Lift Girder Bracing Strut.

Sarah Long Bridge

Spans 1, 3, 5 - U0/U8 ; Span 2 - U0; Span 4 - U8

Note: Exterior Plates Shown. Interior is similar, but less severe condition.

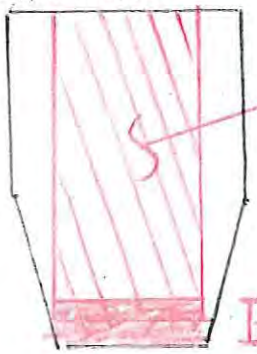

Span 1 - U0E; Span 4 - U8W, U0W

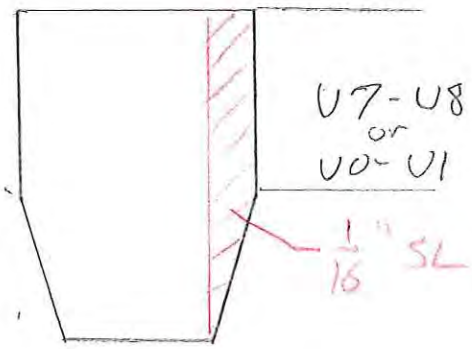

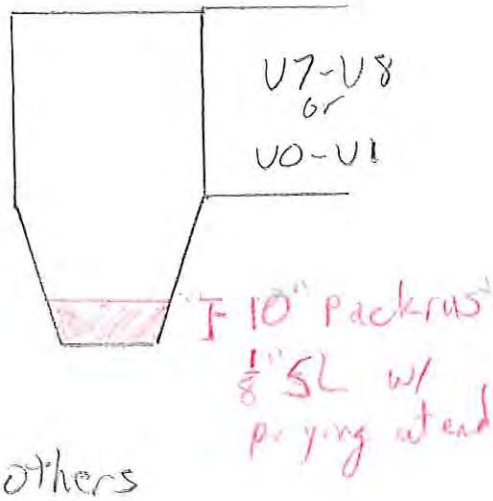

Span 1 - U0W, U8E
Span 2 - U0E
Span 4 - U8W
Span 5 - U0W, U8E

All others

Project: SM Long Bridge	Computed: JFM	Date: 7-28-09	
Subject: Gusset PL's	Checked:	Date:	
Task:	Page: 4	of: 17	
Job #:	No:		

HDR | ONE COMPANY *Many Solutions*™

Sarah Long Bridge

Gusset Span 2, L8 and Span 4, L0 - "Half Truss at Tower Cols. - Fixed Span"

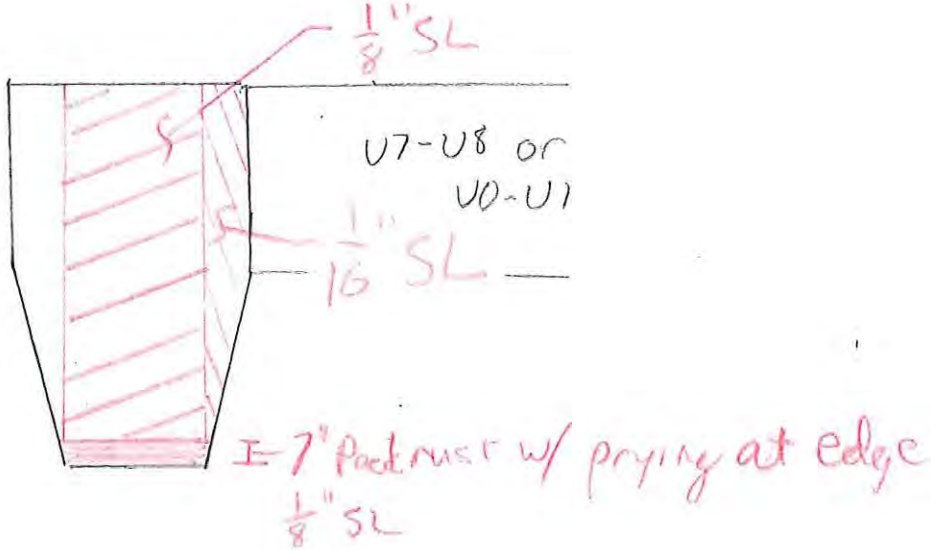

Note: Exterior Shown. Interior Similar, but in less severe condition

Project: SM Long Bridge	Computed: JFM	Date: 7-18-09	
Subject: Gusset PL's	Checked:	Date:	
Task:	Page: 5	of: 17	
Job #:	No:		

HDR | ONE COMPANY *Many Solutions*™

Sarah Long Bridge

Interior Gusset Plate Deterioration

Typical all lower gussets from L1 to L7

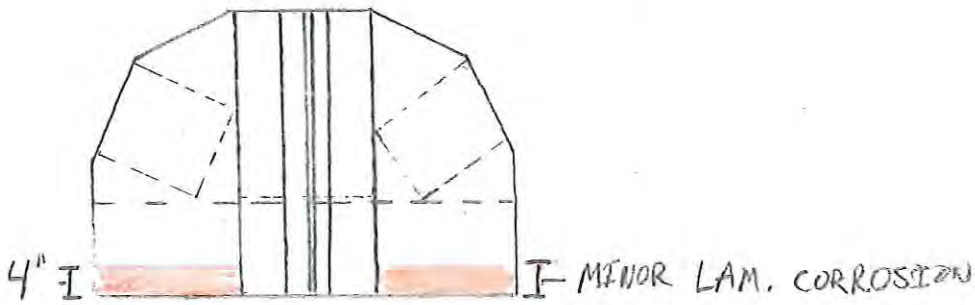

L2, L4, L6

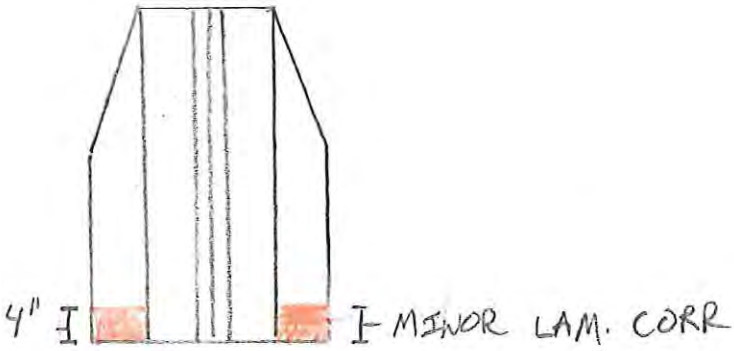

L1, L3, L5, L7

Sarah Long Bridge

Interior Gusset Plate Deterioration

Typical all upper gussets from U1 to U7

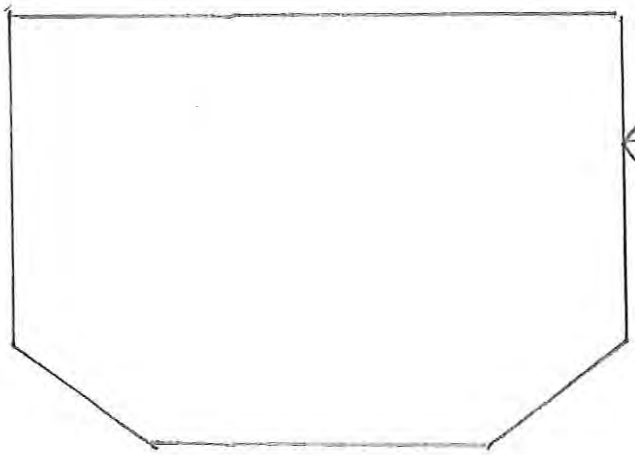

Plate satisfactory with paint fraying and spot rust on inside face

U1, U3, U5, U7

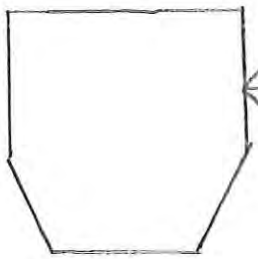

Plate satisfactory with paint fraying and spot rust on inside face

U2, U4, U6

Notes

Gusset U7 East on Span 3 has less that 0.5 sf. of surface rust on outside face

Gusset U7 East on Span 4 has laminar corrosion at interface with Roadway Floorbeam knee brace

Sarah Long Bridge - Exterior Gusset Plates

Gusset L1 Deterioration

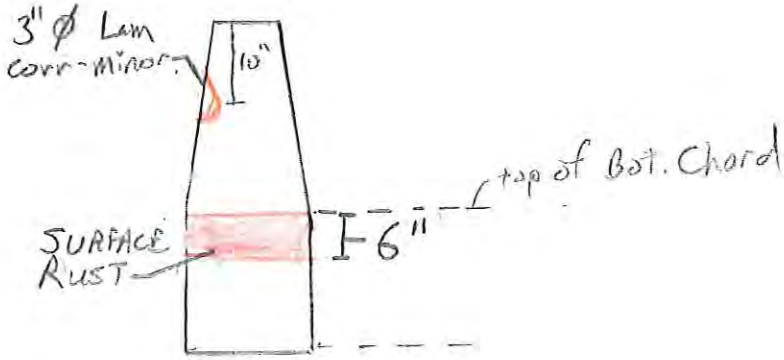

1E, 1W, 2E, 5W, 4W

Note:

Gusset L1 at other trusses are in generally satisfactory condition

Sarah Long Bridge - Exterior Gusset Plates

Gusset L2 Deterioration

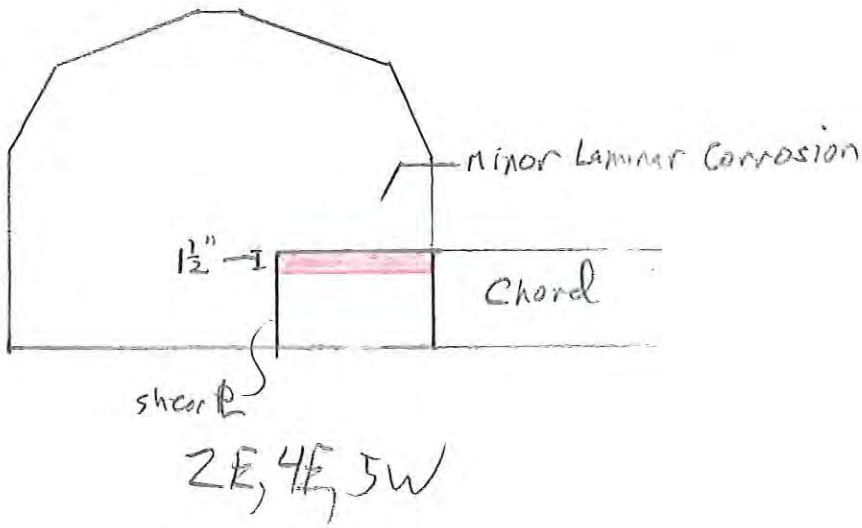

2E, 4E, 5W

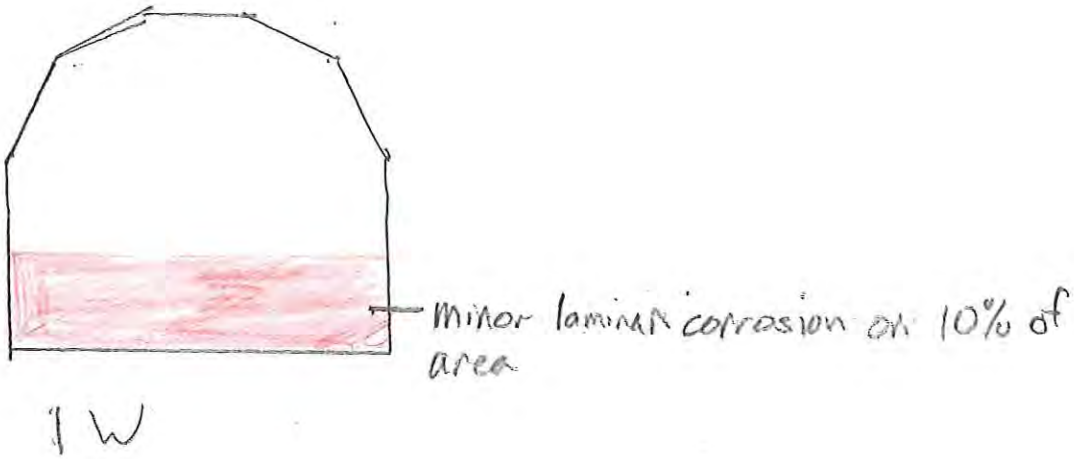

1W

Note:

Gusset L2 at other trusses are in generally satisfactory condition.

Sarah Long Bridge - Exterior Gusset Plate
Gusset L3 Deterioration

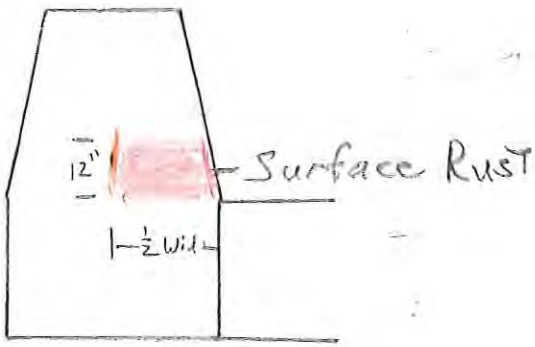

1W, 1E, 3E, 4W, 4E, 5W

Note:

Gusset L3 at other trusses are in generally good condition.

Sarah Long Bridge - Exterior Gusset Plate

L4 Deterioration

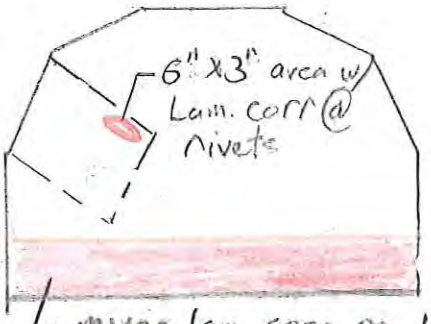

minor lam corr on 10% of area

1W

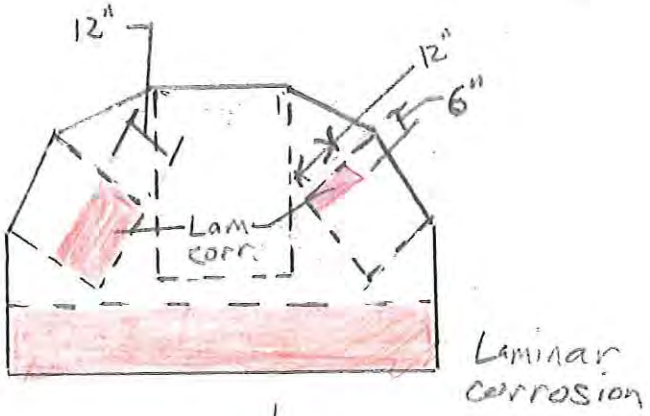

2W

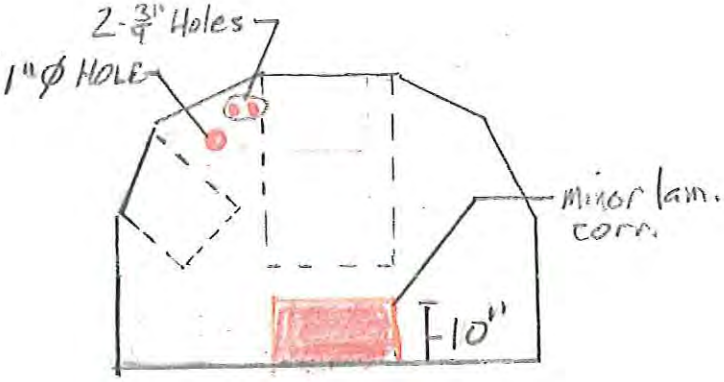

Holes are drilled for conduit connection.

3E, 3W

Note:

Gusset L4 at other trusses are in generally satisfactory Condition.

Sarah Long Bridge - Exterior Gusset Plate

Gusset U1 Deterioration

Span 1 E. 1

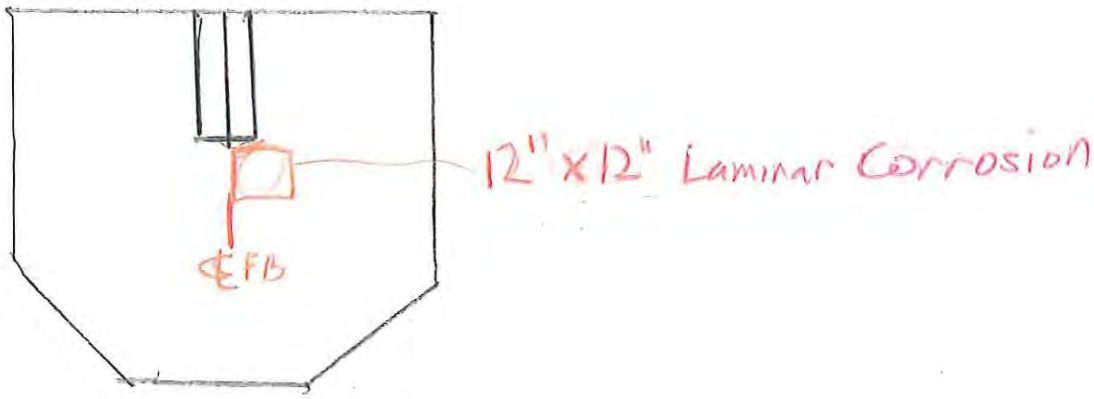

All others:

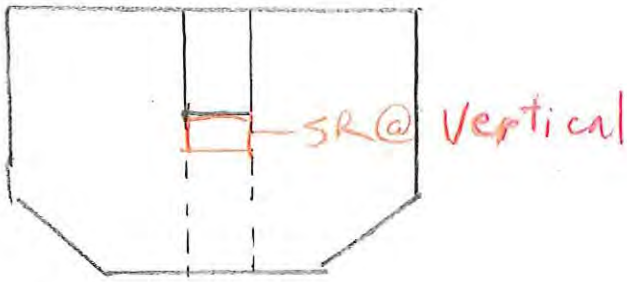

Project: SM Long Bridge	Computed: JFM	Date: 7-18-07	
Subject: Gusset Pl's	Checked:	Date:	
Task:	Page: 12	of: 17	
Job #:	No:		

HDR | ONE COMPANY *Many Solutions*™

Sarah Long Bridge - Exterior Gusset Plate

Gusset L6 Deterioration

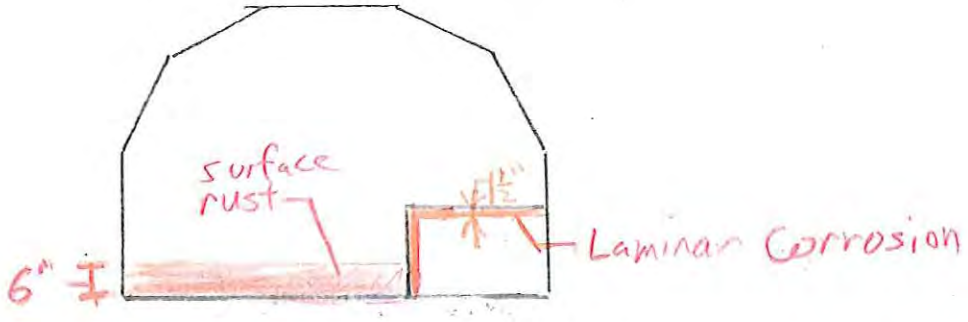

1E, 1W, 2E, 3W, 3E, 4W, 4E, 5E, 5W

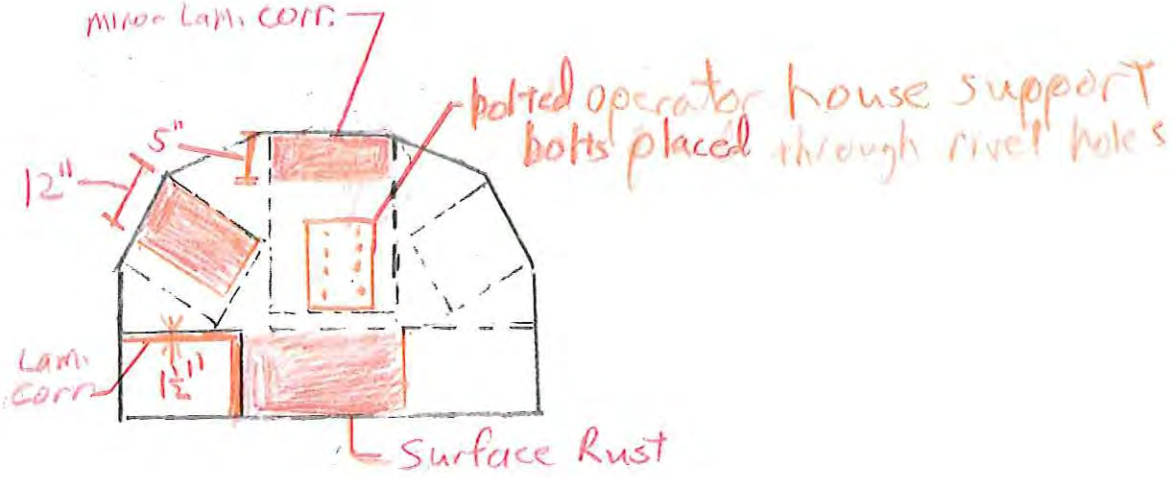

2W

Sarah Long Bridge - Exterior Gusset Plate

Gusset L5 and L7 deterioration

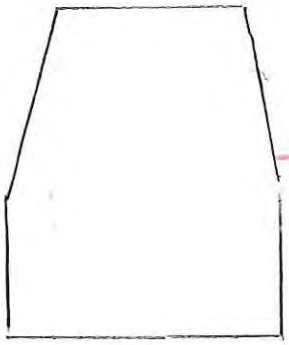

L5: 1E, 5E

L7: 1E, 4E, 5W, 5E

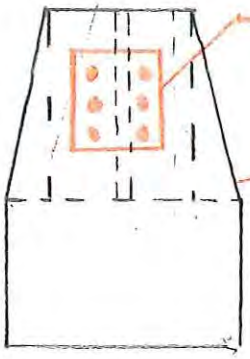

L7: 2W

Note

Gussets L5 and L7 at other trusses are in generally satisfactory condition.

Sarah Long Bridge - Exterior Gusset Plate

Gusset U5 Deterioration

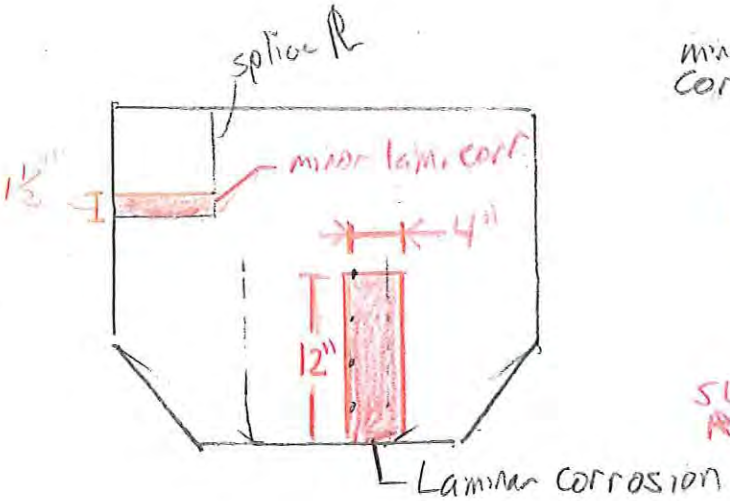

2E, 3E, 3W

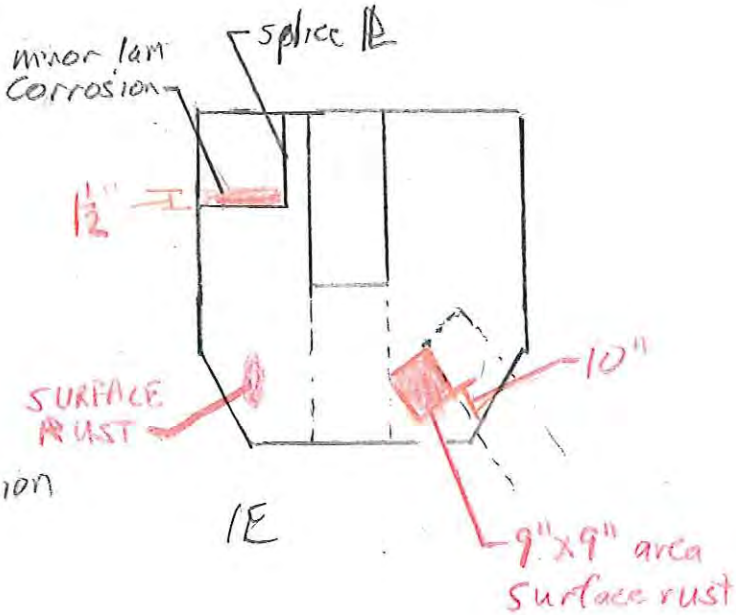

1E

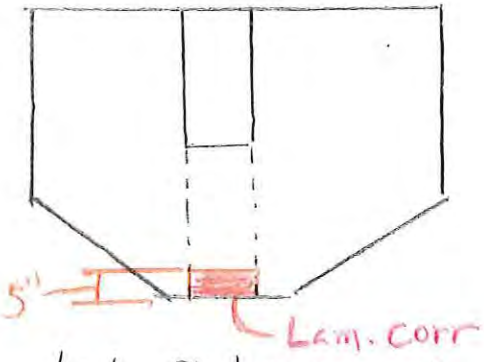

1W, 5W, 5E

Note:

Gusset U5 at other trusses are in generally satisfactory condition.

Project: SM Long Bridge	Computed: JTM	Date: 7-18-09	
Subject: Gusset PL's	Checked:	Date:	
Task:	Page: 15	of:	
Job #:	No:		

HDR | ONE COMPANY Many Solutions℠

Sarah Long Bridge - Exterior Gusset Plate

Gusset U7 deterioration

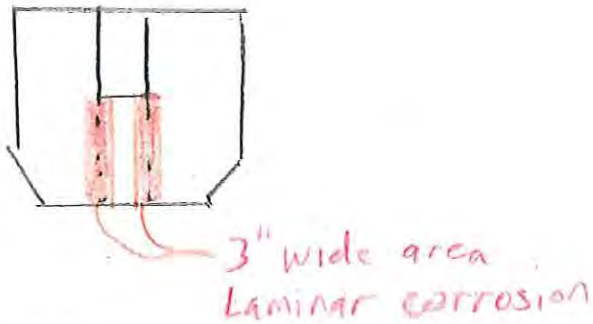

3E, 3W

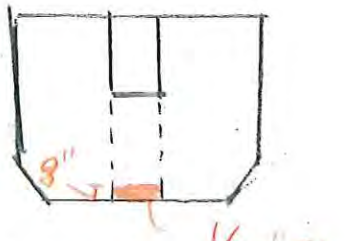

2W, 1E

Note:

Gusset U7 at other trusses are in generally satisfactory condition

Sarah Long Bridge - Exterior Gusset Plate

Gusset U2, U4, U6 Deterioration

All others

3W-U2

Project: SM Long Bridge	Computed: JFM	Date: 7-18-09	
Subject: Gusset PL's	Checked:	Date:	
Task:	Page: 17	of: 17	
Job #:	No:		

Sarah Long Bridge - Exterior Gusset Plate

Gusset U3 Deterioration

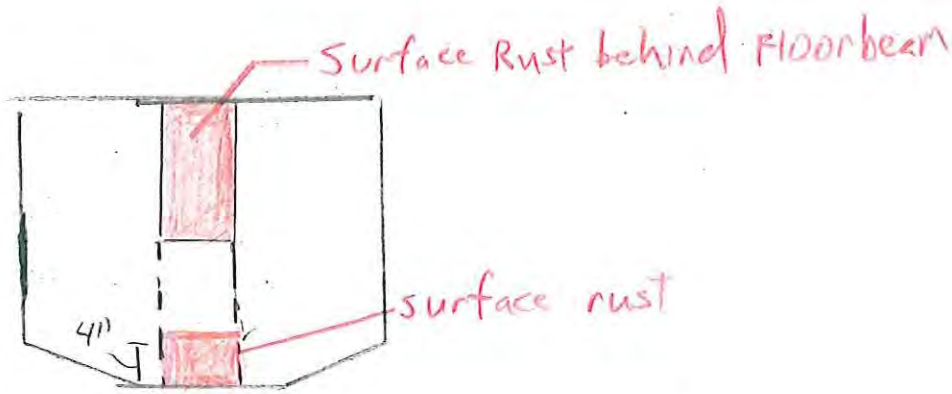

1E, 2E, 2W, 4W, 3W, 5W, 1W, 3E, 5E

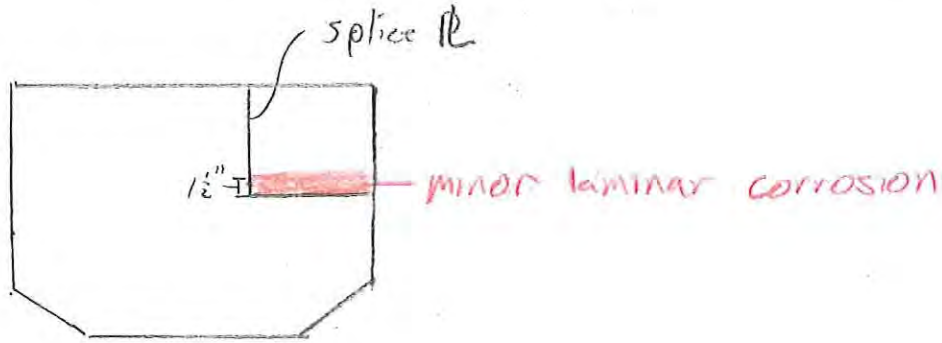

4E

Notes

Gusset U3 at span 1 East has laminar corrosion at edges.

Section C:

Typical Stringer Condition

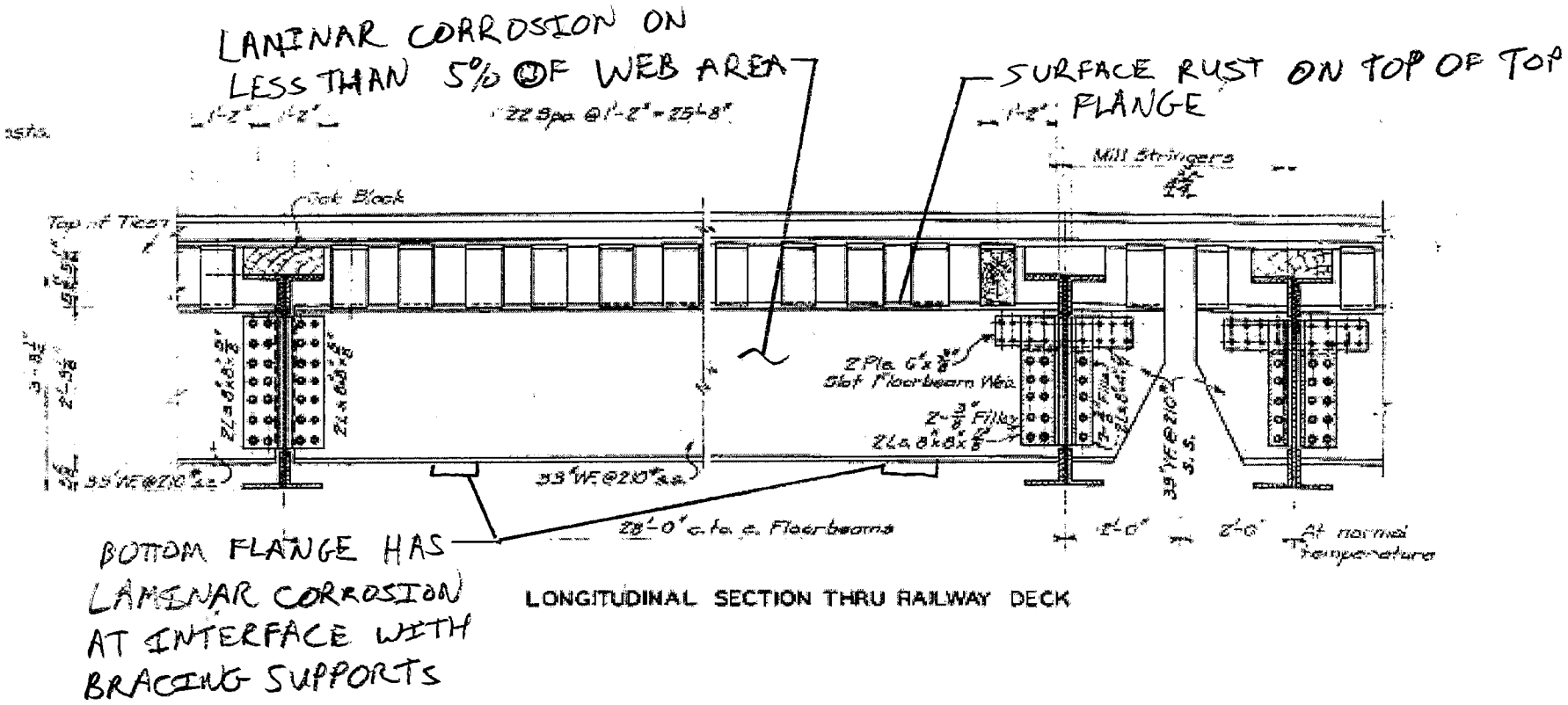

LONGITUDINAL SECTION THRU RAILWAY DECK

Typical Railroad Deck Stringer

Section D:

Typical Floorbeam Condition

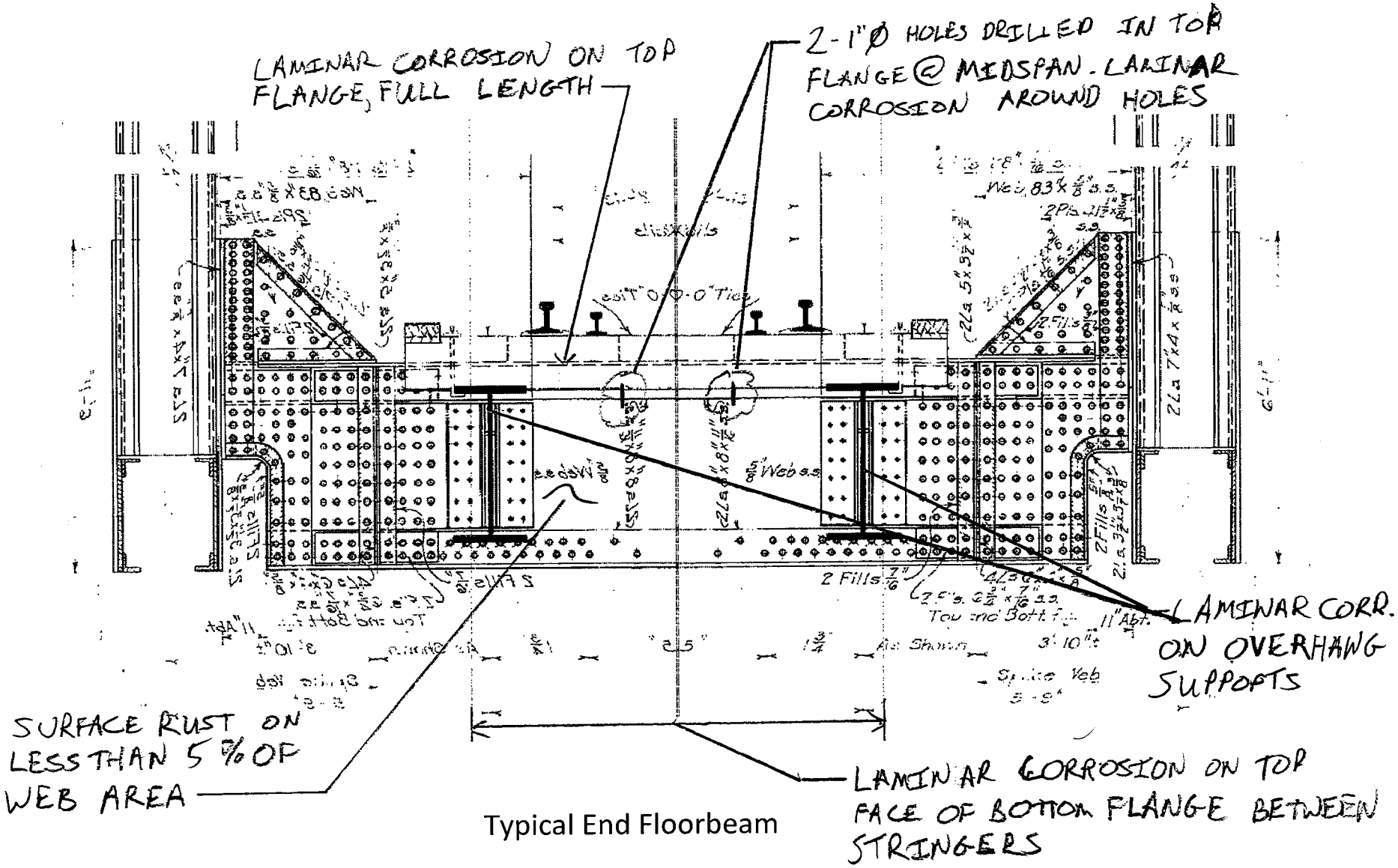

Typical End Floorbeam

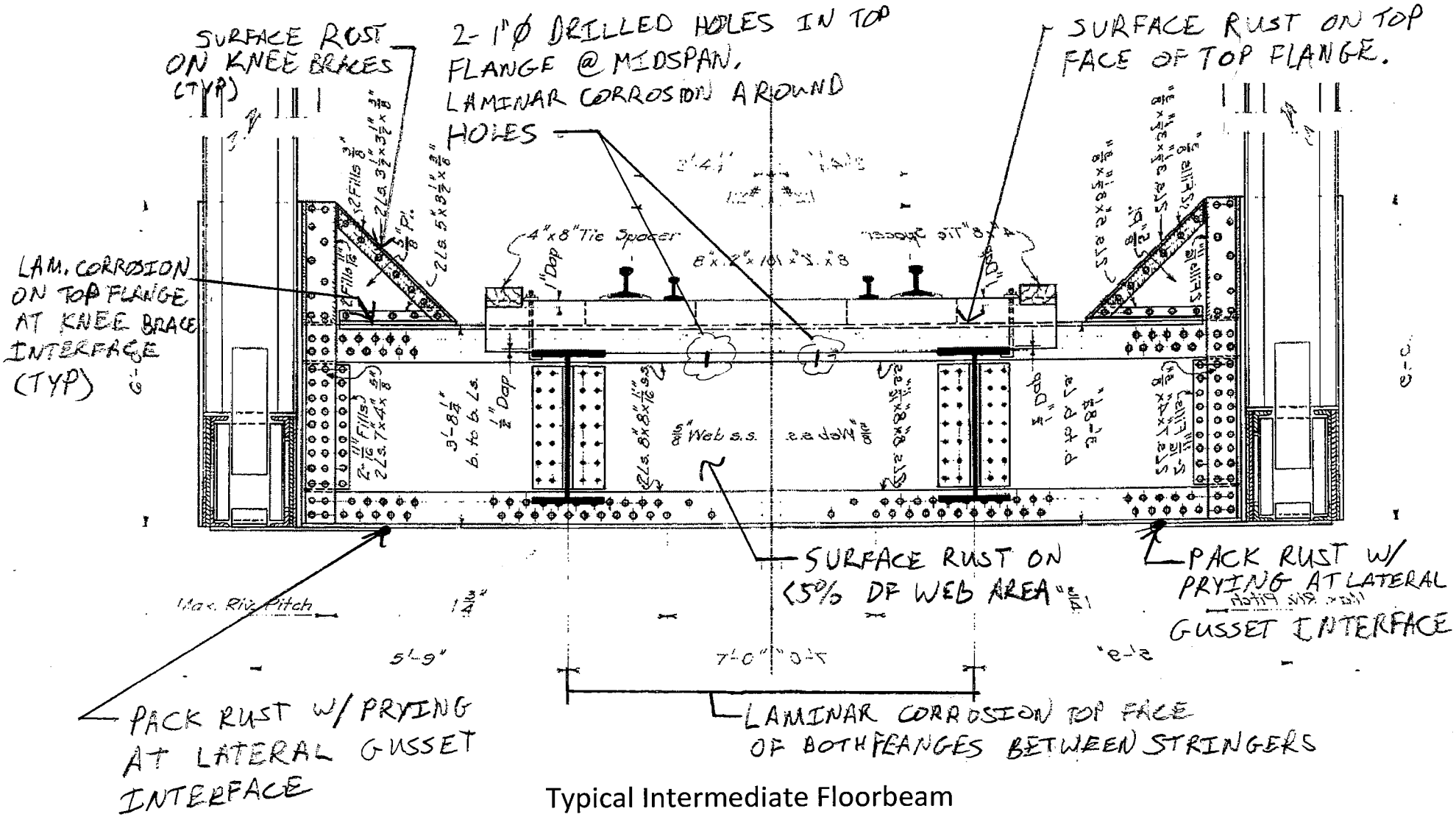

Typical Intermediate Floorbeam

Appendix C

Part II: Approach Spans

Section A:

Girder Condition

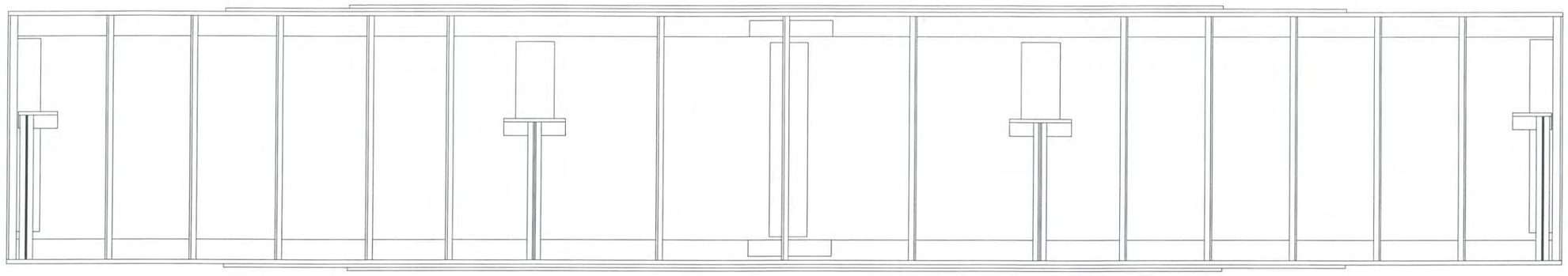

EAST ELEVATION
(LOOKING WEST)

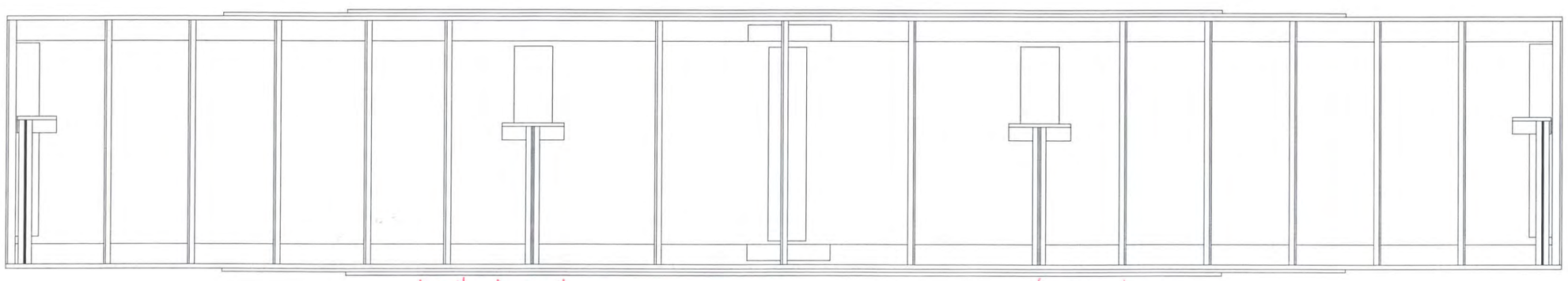

WEST ELEVATION
(LOOKING EAST)

Hoyle, Tanner Associates, Inc.
Consulting Engineers
150 Dow Street,
Manchester, NH 03101-1227
Tel 603-669-5555, Fax 603-669-4168
Web Page: www.hoyletanner.com
© Copyright 2009

SARAH LONG BRIDGE

SPAN 1 WEST GIRDER ELEVATION

INSPECTED BY: JB	DATE: 6-5-2009	SCALE: 3/16" = 1'-0" H
& EGW		3/8" = 1'-0" V

EAST ELEVATION
(LOOKING WEST)

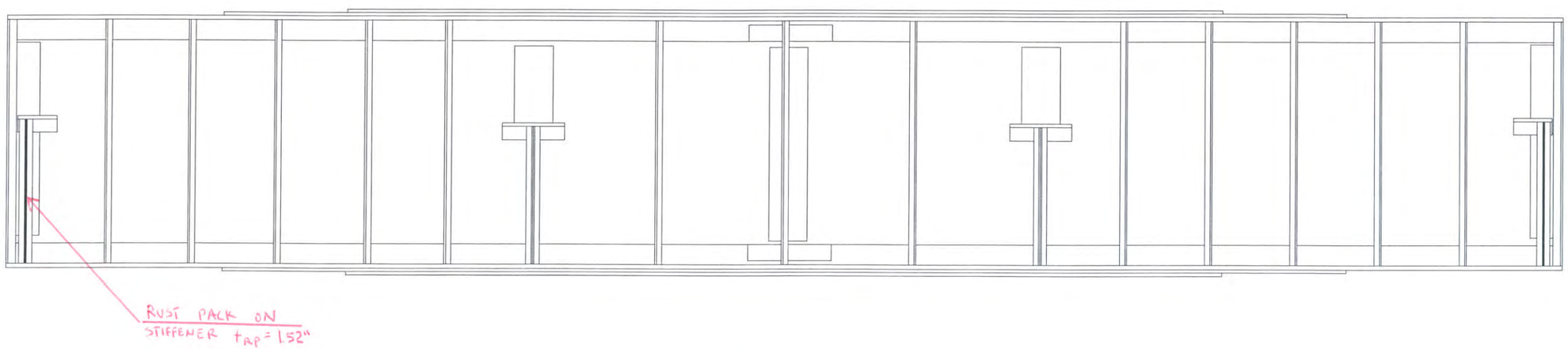

WEST ELEVATION
(LOOKING EAST)

Hoyle, Tanner Associates, Inc.
Consulting Engineers
150 Dow Street,
Manchester, NH 03101-1227
Tel 603-669-5555, Fax 603-669-4168
Web Page: www.hoyletanner.com
© Copyright 2009

SARAH LONG BRIDGE
SPAN 2 WEST GIRDER ELEVATION

INSPECTED BY: JB & EGW	DATE: 6-5-2009	SCALE: 3/16" = 1'-0" H 3/8" = 1'-0" V

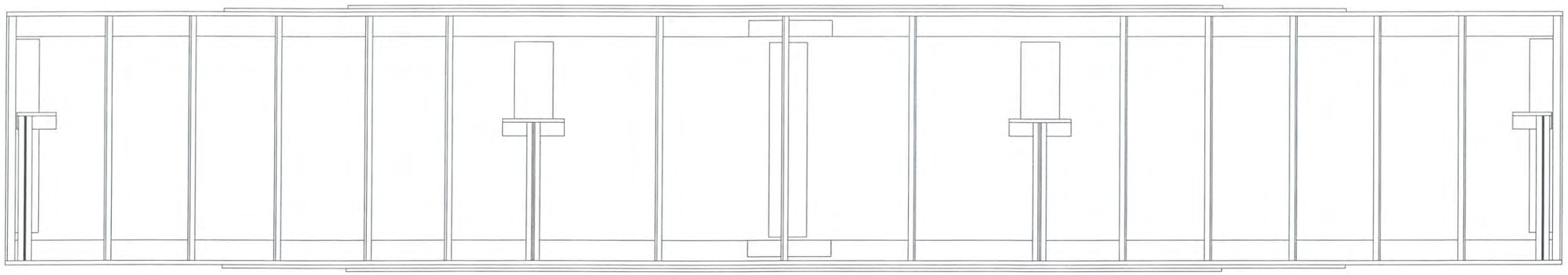

WEST ELEVATION
(LOOKING EAST)

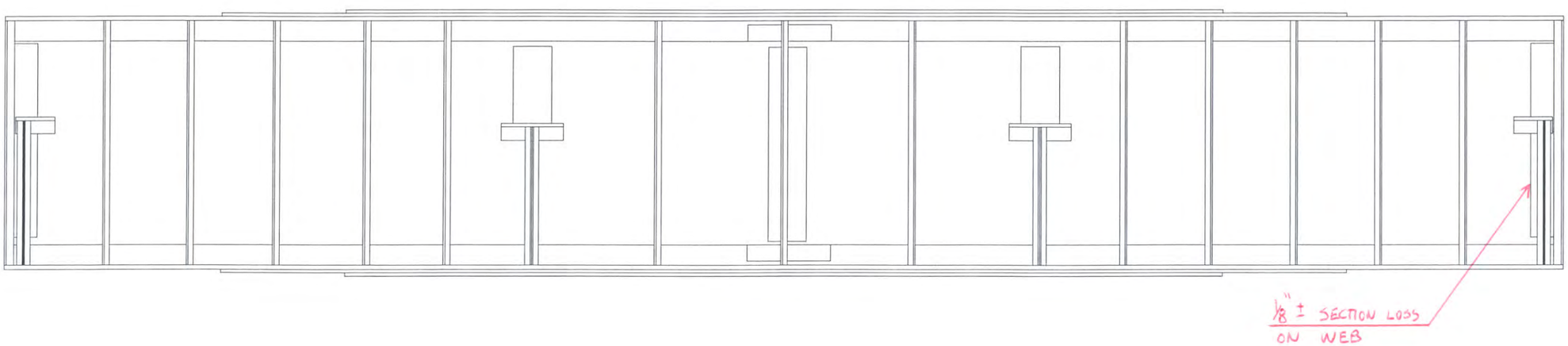

EAST ELEVATION
(LOOKING WEST)

Hoyle, Tanner Associates, Inc.
Consulting Engineers

150 Dow Street.
Manchester, NH 03101-1227
Tel 603-669-5555, Fax 603-669-4168
Web Page: www.hoyletanner.com
© Copyright 2009

SARAH LONG BRIDGE
SPAN 2 EAST GIRDER ELEVATION

INSPECTED BY: JB & EGW	DATE: 3-23-2009	SCALE: 3/16" = 1'-0" H 3/8" = 1'-0" V

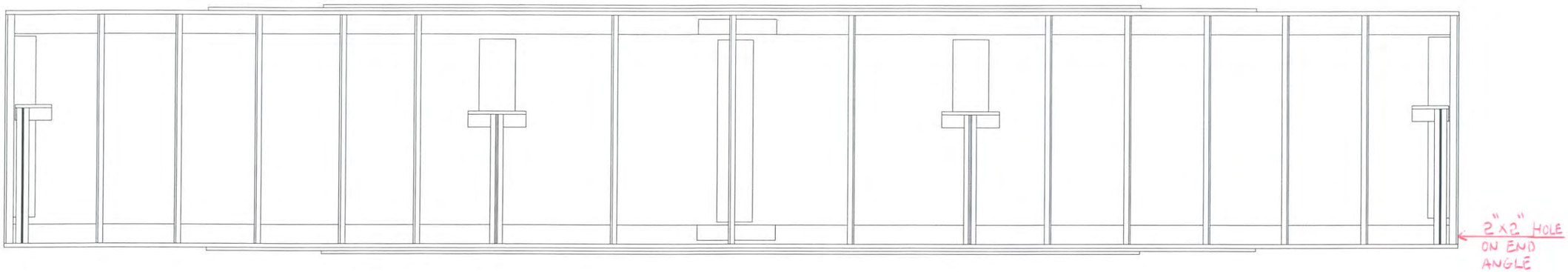

EAST ELEVATION
(LOOKING WEST)

WEST ELEVATION
(LOOKING EAST)

Hoyle, Tanner Associates, Inc.
Consulting Engineers

150 Dow Street,
Manchester, NH 03101-1227
Tel 603-669-5555, Fax 603-669-4168
Web Page: www.hoyletanner.com
© Copyright 2009

SARAH LONG BRIDGE
SPAN 3 WEST GIRDER ELEVATION

INSPECTED BY: JB & EGW	DATE: 6-5-2009	SCALE: 3/16" = 1'-0" H 3/8" = 1'-0" V

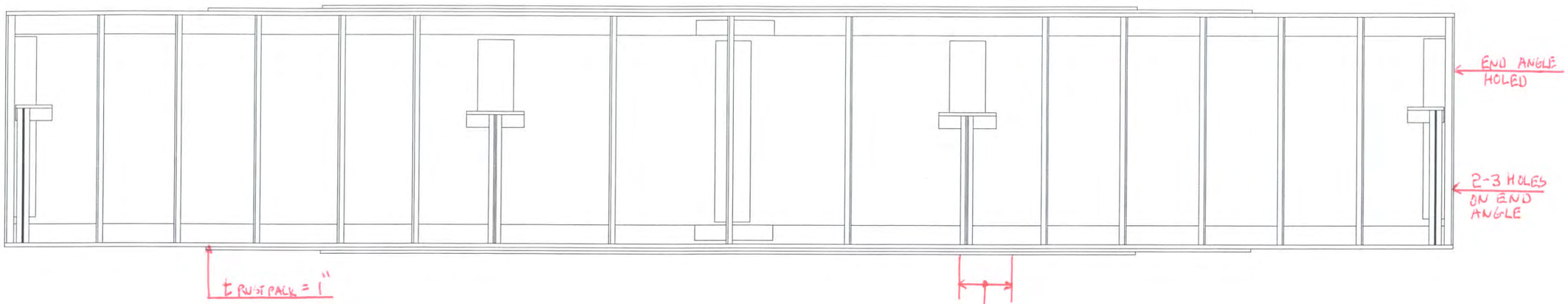

WEST ELEVATION
(LOOKING EAST)

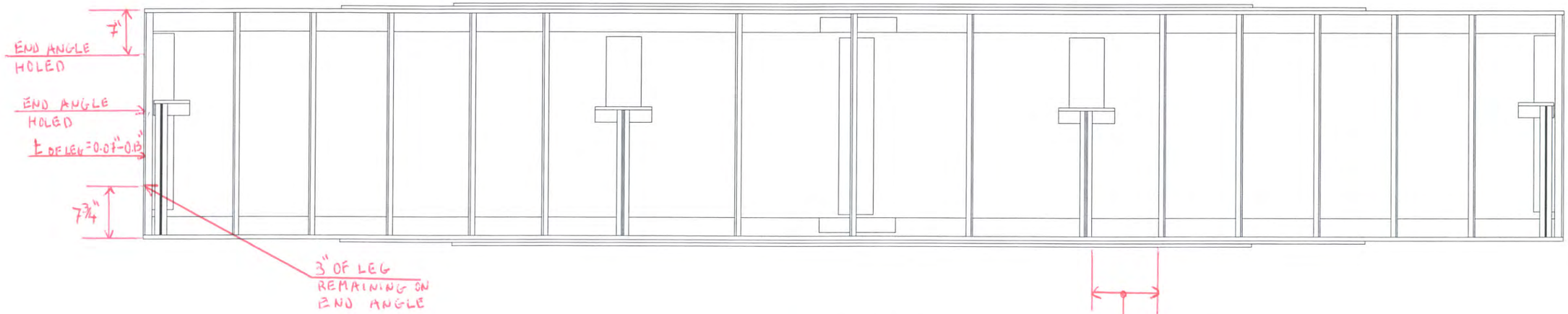

EAST ELEVATION
(LOOKING WEST)

Hoyle, Tanner Associates, Inc.
Consulting Engineers
150 Dow Street
Manchester, NH 03101-1227
Tel 603-669-5555, Fax 603-669-4168
Web Page: www.hoyletanner.com
© Copyright 2009

SARAH LONG BRIDGE
SPAN 4 WEST GIRDER ELEVATION

INSPECTED BY: JB	DATE: 6-5-2009	SCALE: 3/16" = 1'-0" H
& EGW		3/8" = 1'-0" V

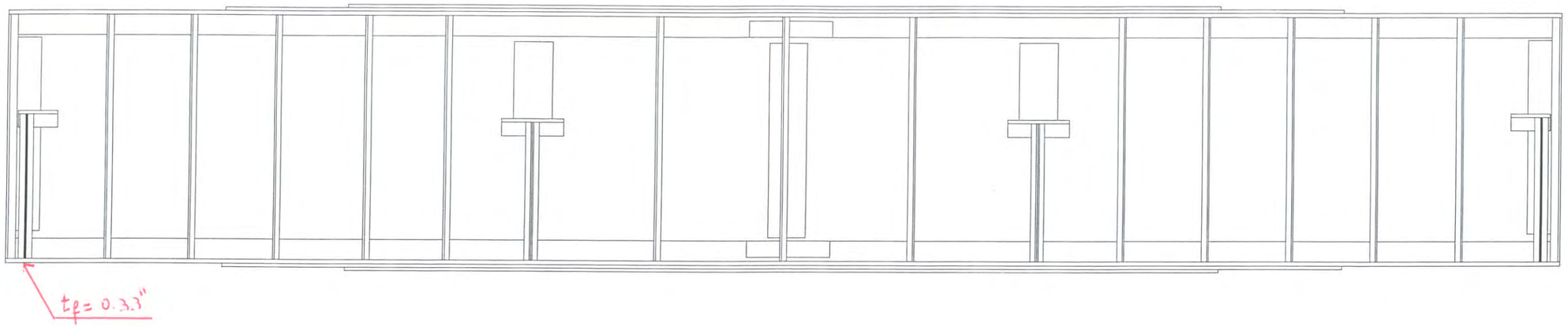

WEST ELEVATION
(LOOKING EAST)

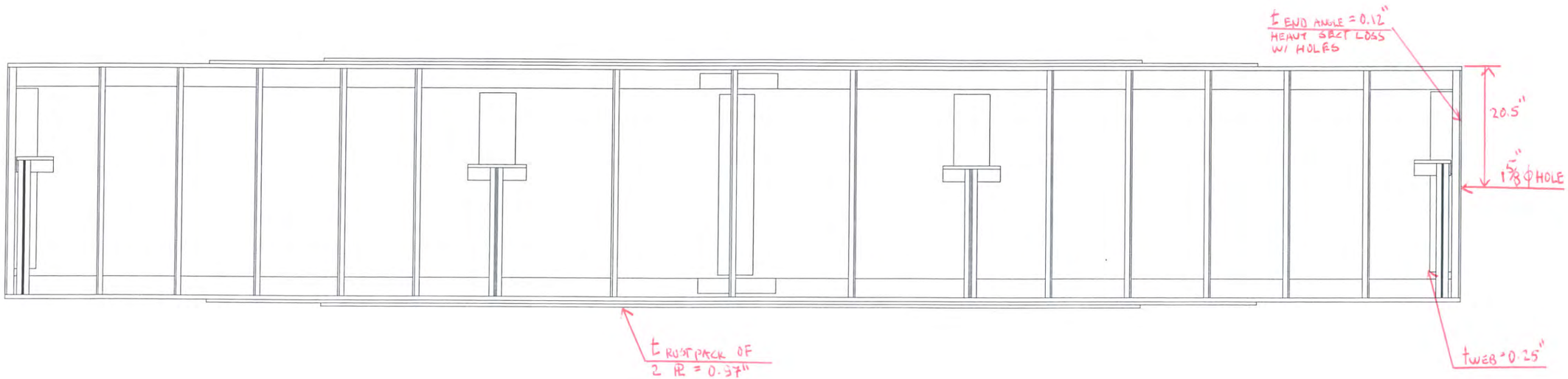

EAST ELEVATION
(LOOKING WEST)

Hoyle, Tanner Associates, Inc.
Consulting Engineers

150 Dow Street
Manchester, NH 03101-1227
Tel 603-669-5555, Fax 603-669-4168
Web Page: www.hoyletanner.com
© Copyright 2009

SARAH LONG BRIDGE
SPAN 5 EAST GIRDER ELEVATION

INSPECTED BY: JB & EGW	DATE: 5-29-2009	SCALE: 3/16" = 1'-0" H 1/8" = 1'-0" V

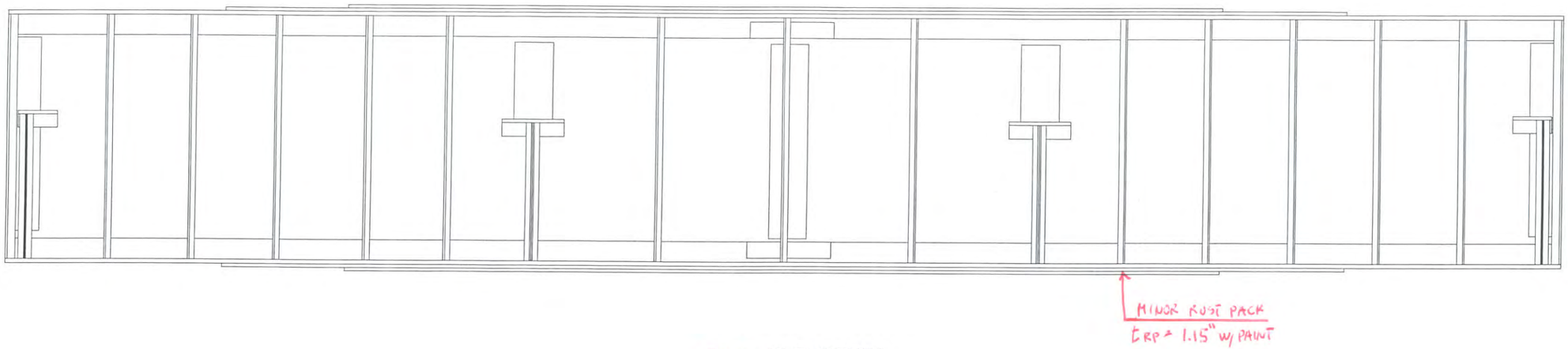

EAST ELEVATION
(LOOKING WEST)

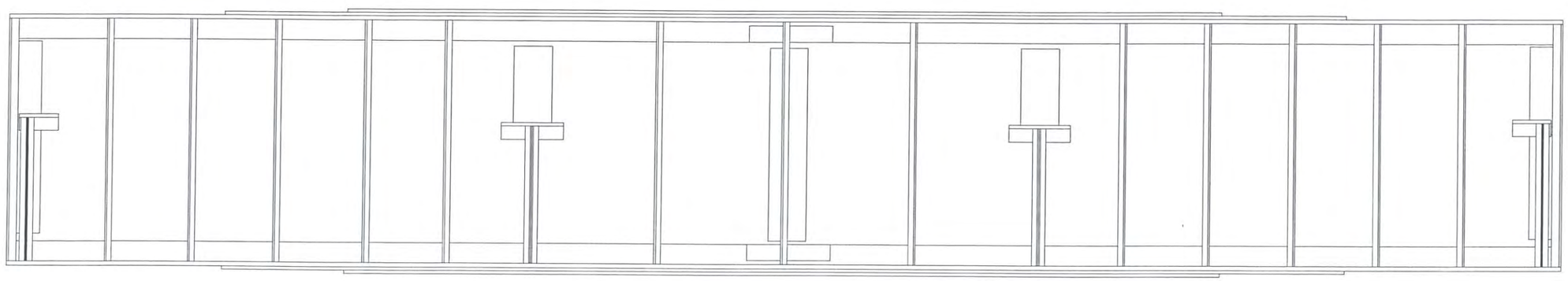

WEST ELEVATION
(LOOKING EAST)

Hoyle, Tanner Associates, Inc.
Consulting Engineers
150 Dow Street.
Manchester, NH 03101–1227
Tel 603–669–5555, Fax 603–669–4168
Web Page: www.hoyletanner.com
© Copyright 2009

SARAH LONG BRIDGE
SPAN 5 WEST GIRDER ELEVATION

INSPECTED BY: JB & EGW	DATE: 6-5-2007	SCALE: 3/16" = 1'–0" H 3/8" = 1'–0" V

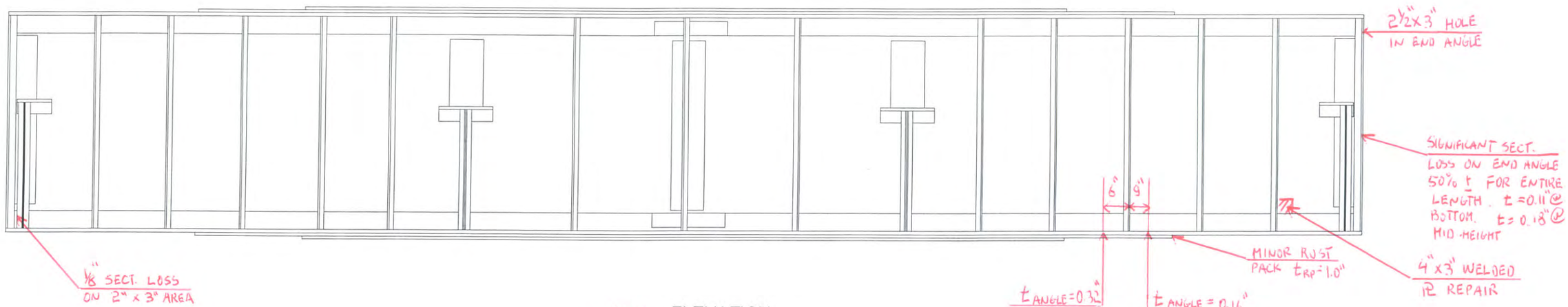

EAST ELEVATION
(LOOKING WEST)

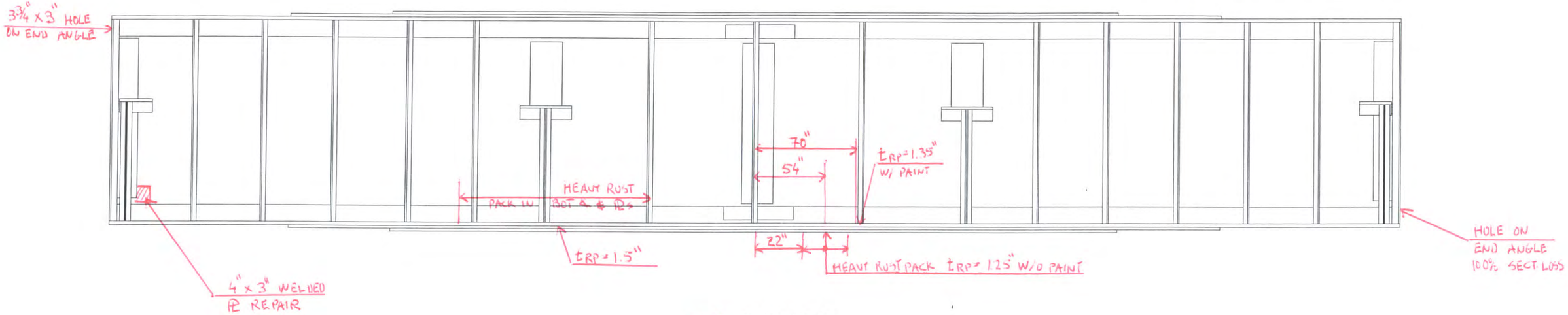

WEST ELEVATION
(LOOKING EAST)

Hoyle, Tanner Associates, Inc.
Consulting Engineers
150 Dow Street.
Manchester, NH 03101-1227
Tel 603-669-5555, Fax 603-669-4168
Web Page: www.hoyletanner.com
© Copyright 2009

SARAH LONG BRIDGE
SPAN 6 WEST GIRDER ELEVATION

INSPECTED BY: JB & EGW	DATE:	SCALE: 3/16" = 1'-0" H ⅞" = 1'-0" V

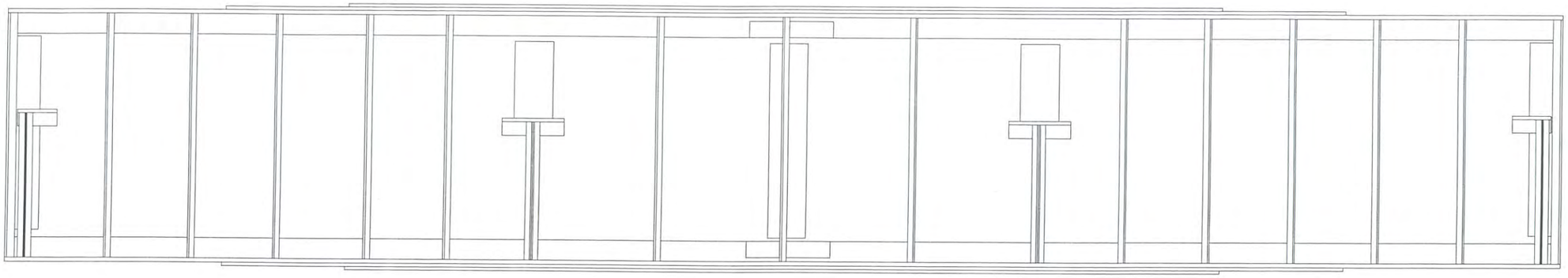

WEST ELEVATION
(LOOKING EAST)

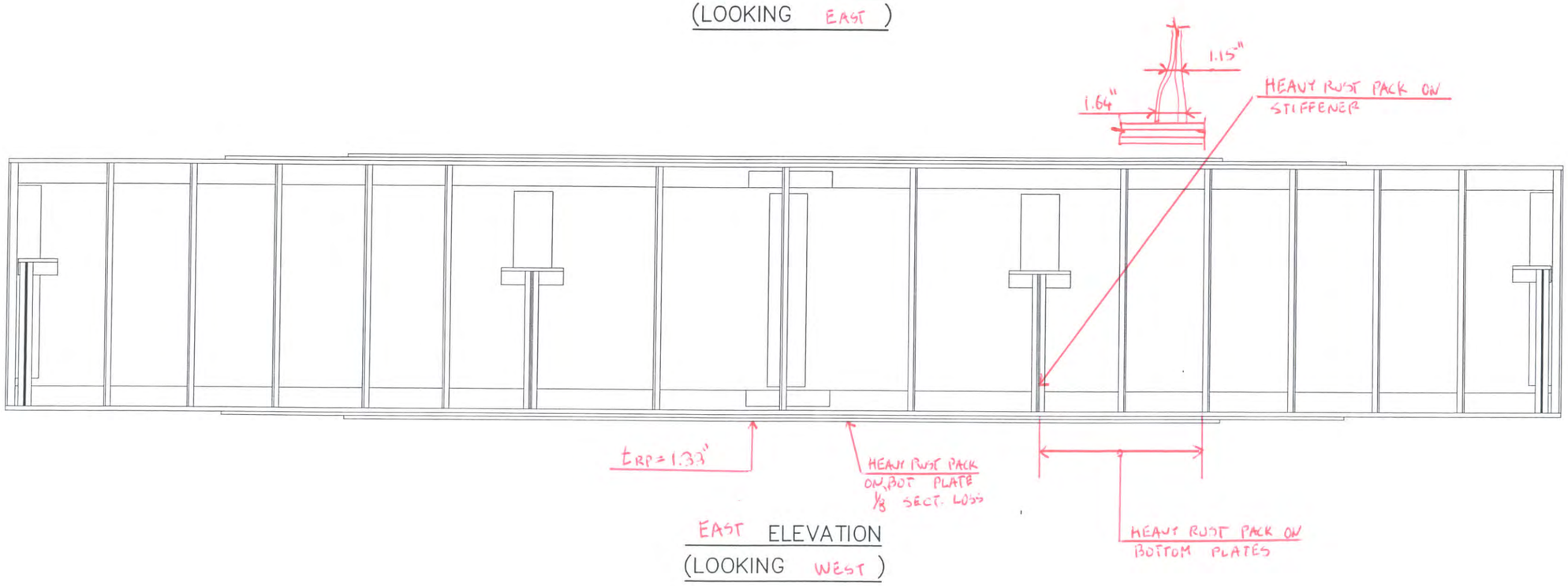

EAST ELEVATION
(LOOKING WEST)

Hoyle, Tanner Associates, Inc.
Consulting Engineers
150 Dow Street.
Manchester, NH 03101–1227
Tel 603–669–5555, Fax 603–669–4168
Web Page: www.hoyletanner.com
© Copyright 2009

SARAH LONG BRIDGE
SPAN 7 EAST GIRDER ELEVATION

INSPECTED BY: JB & EGW	DATE: 6-1-2009	SCALE: 3/16" = 1'–0" H 1/8" = 1'–0" V

WEST ELEVATION
(LOOKING EAST)

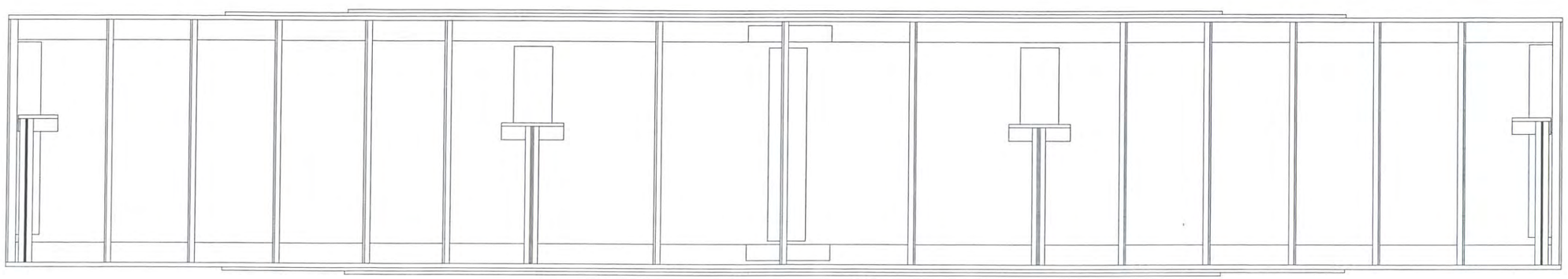

EAST ELEVATION
(LOOKING WEST)

Hoyle, Tanner Associates, Inc.
Consulting Engineers

150 Dow Street.
Manchester, NH 03101-1227
Tel 603-669-5555, Fax 603-669-4168
Web Page: www.hoyletanner.com
© Copyright 2009

SARAH LONG BRIDGE
SPAN 7 WEST GIRDER ELEVATION

INSPECTED BY: JB & EGW	DATE: 6-3-2009	SCALE: 3/16" = 1'-0" H 7/8" = 1'-0" V

WEST ELEVATION
(LOOKING EAST)

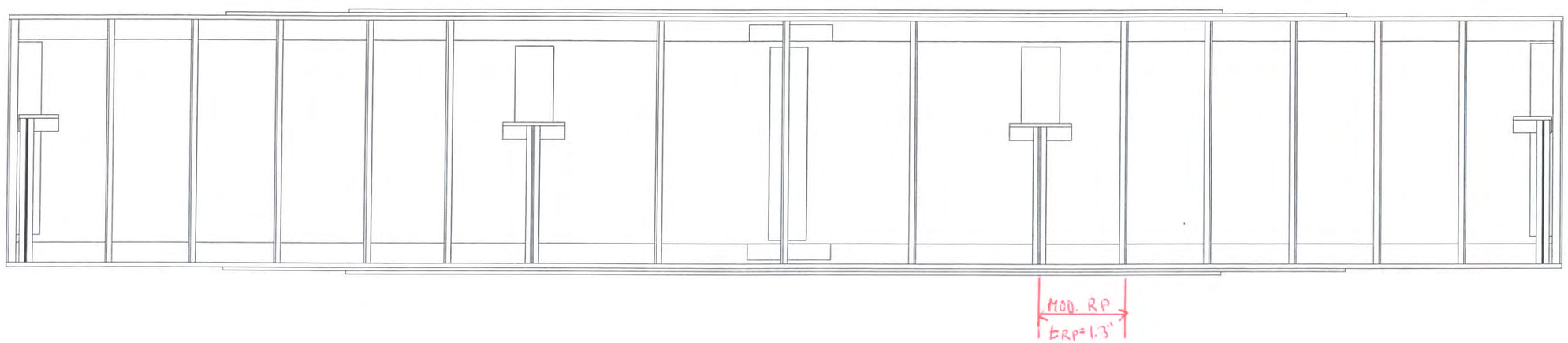

EAST ELEVATION
(LOOKING WEST)

Hoyle, Tanner Associates, Inc.
Consulting Engineers

150 Dow Street.
Manchester, NH 03101-1227
Tel 603-669-5555, Fax 603-669-4168
Web Page: www.hoyletanner.com
© Copyright 2009

SARAH LONG BRIDGE

SPAN 8 WEST GIRDER ELEVATION

INSPECTED BY: JB & EGW	DATE: 6-3-2009	SCALE: 3/16" = 1'-0" H 3/8" = 1'-0" V

EAST ELEVATION
(LOOKING WEST)

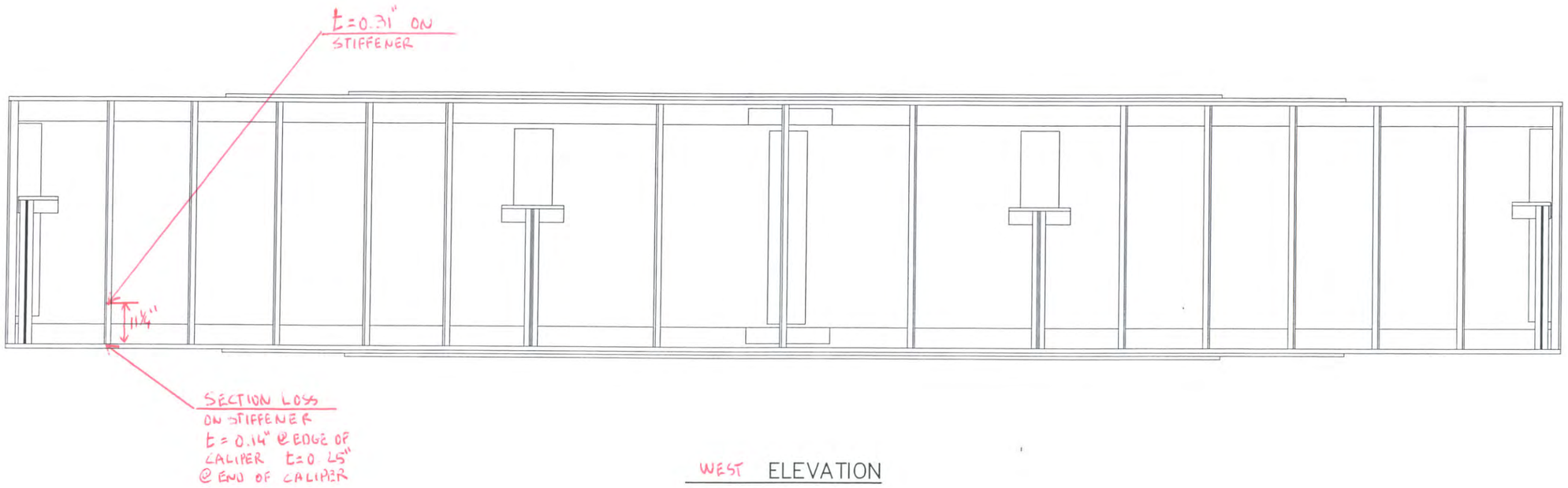

WEST ELEVATION
(LOOKING EAST)

Hoyle, Tanner Associates, Inc.
Consulting Engineers
150 Dow Street.
Manchester, NH 03101-1227
Tel 603-669-5555, Fax 603-669-4168
Web Page: www.hoyletanner.com
© Copyright 2009

SARAH LONG BRIDGE
SPAN 8 EAST GIRDER ELEVATION

INSPECTED BY: JB & EGW	DATE: 6-2-2009	SCALE: 3/16" = 1'-0" H, 3/8" = 1'-0" V

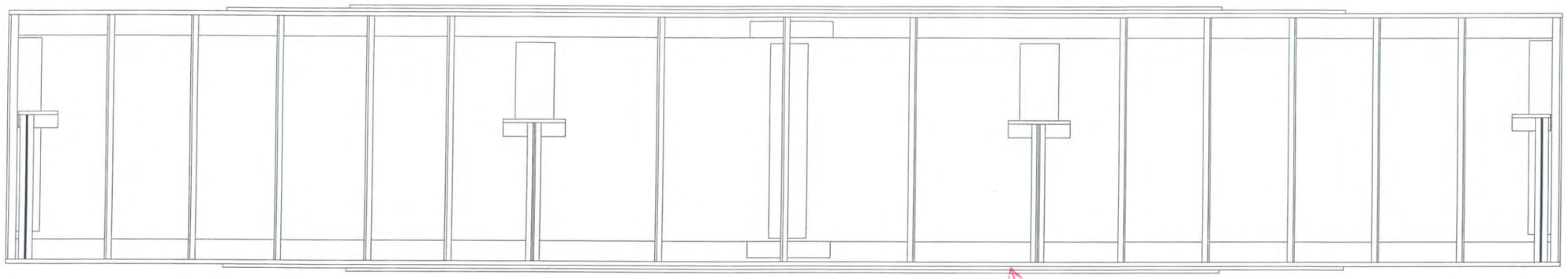

EAST ELEVATION
(LOOKING WEST)

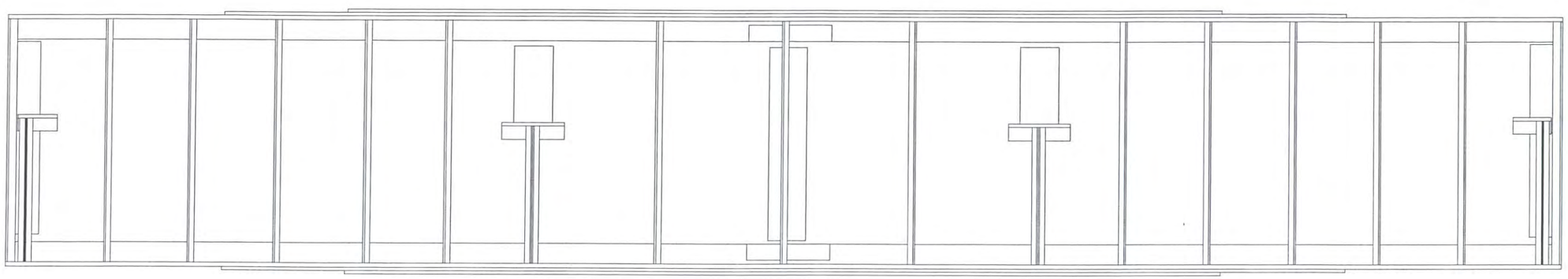

WEST ELEVATION
(LOOKING EAST)

Hoyle, Tanner Associates, Inc.
Consulting Engineers
150 Dow Street.
Manchester, NH 03101-1227
Tel 603-669-5555, Fax 603-669-4168
Web Page: www.hoyletanner.com
© Copyright 2009

SARAH LONG BRIDGE
SPAN 10 WEST GIRDER ELEVATION

INSPECTED BY: JB & EGW	DATE: 6-3-2009	SCALE: 3/16" = 1'-0" H 3/8" = 1'-0" V

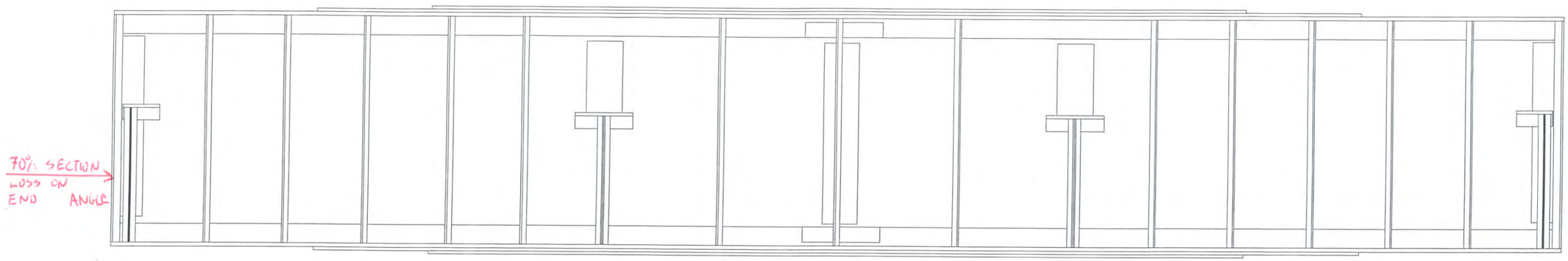

EAST ELEVATION
(LOOKING WEST)

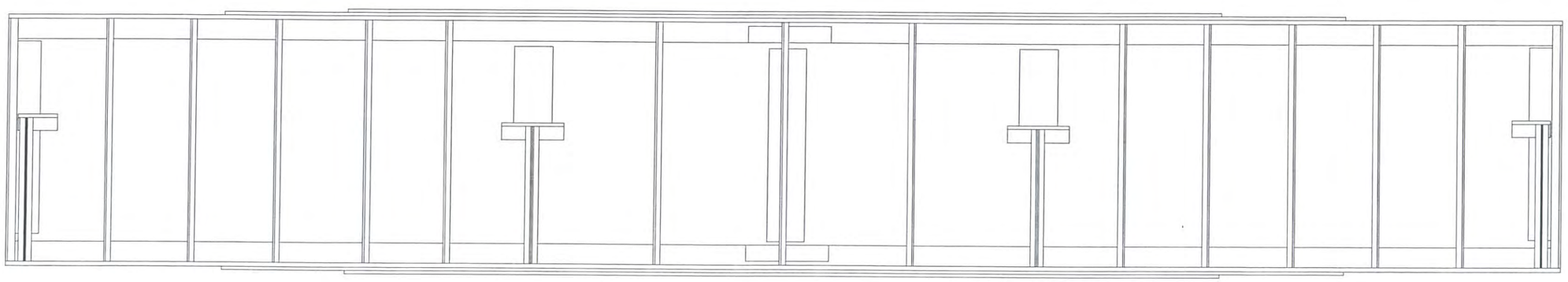

WEST ELEVATION
(LOOKING EAST)

Hoyle, Tanner Associates, Inc.
Consulting Engineers

150 Dow Street.
Manchester, NH 03101-1227
Tel 603-669-5555, Fax 603-669-4168
Web Page: www.hoyletanner.com
© Copyright 2009

SARAH LONG BRIDGE
SPAN 10 EAST GIRDER ELEVATION

INSPECTED BY: JB & EGW	DATE: 6-1-2009	SCALE: 3/16" = 1'-0" H 3/8" = 1'-0" V

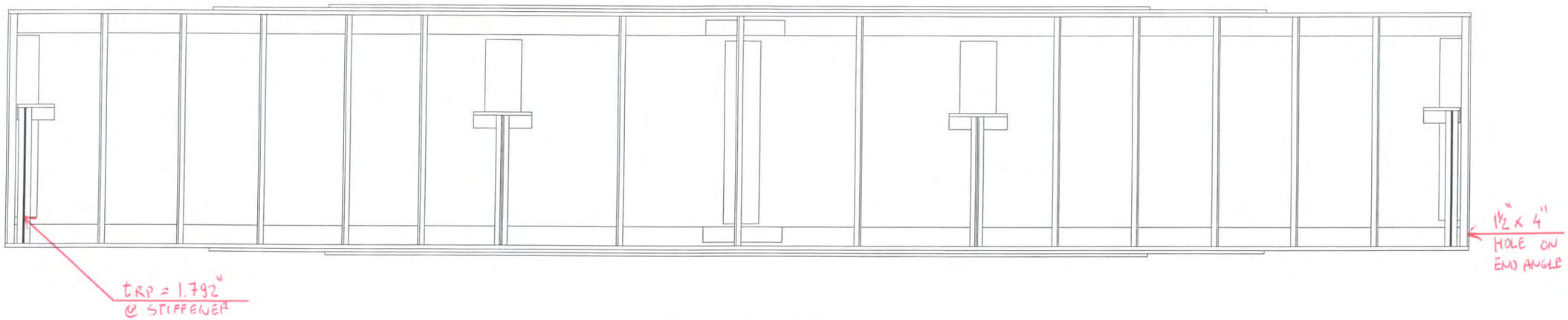

EAST ELEVATION
(LOOKING WEST)

WEST ELEVATION
(LOOKING EAST)

Hoyle, Tanner Associates, Inc.
Consulting Engineers

150 Dow Street
Manchester, NH 03101-1227
Tel 603-669-5555, Fax 603-669-4168
Web Page: www.hoyletanner.com
© Copyright 2009

SARAH LONG BRIDGE

SPAN 11 WEST GIRDER ELEVATION

INSPECTED BY: JB	DATE: 6-3-2009	SCALE: 3/16" = 1'-0" H
& EGW		1/8" = 1'-0" V

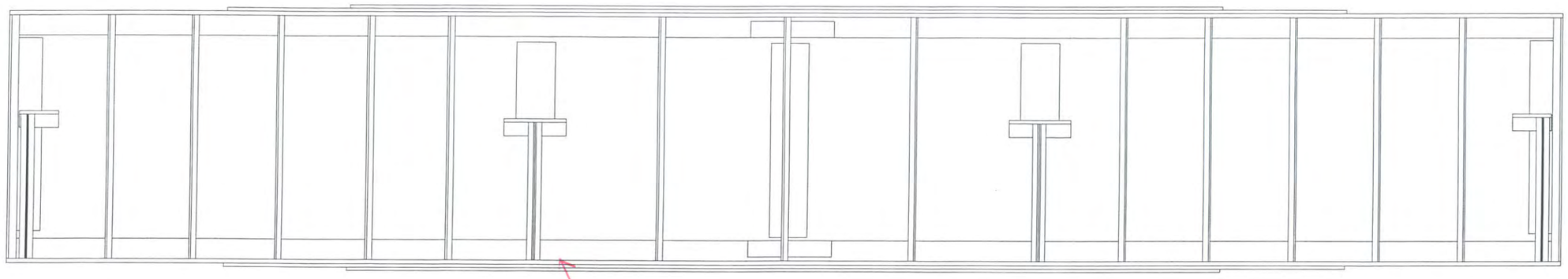

EAST ELEVATION
(LOOKING WEST)

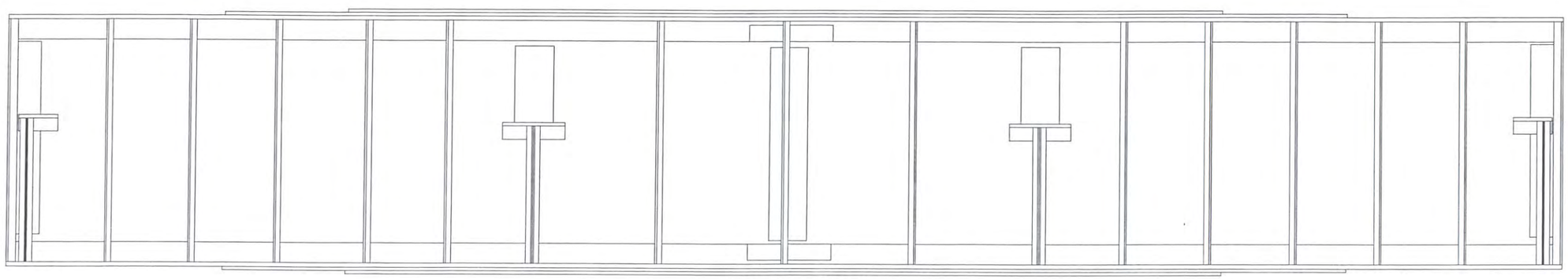

WEST ELEVATION
(LOOKING EAST)

Hoyle, Tanner Associates, Inc.
Consulting Engineers

150 Dow Street.
Manchester, NH 03101-1227
Tel 603-669-5555, Fax 603-669-4168
Web Page: www.hoyletanner.com
© Copyright 2009

SARAH LONG BRIDGE

SPAN 11 EAST GIRDER ELEVATION

INSPECTED BY: JB & EGW	DATE: 6-1-2009	SCALE: 3/16" = 1'-0" H 3/8" = 1'-0" V

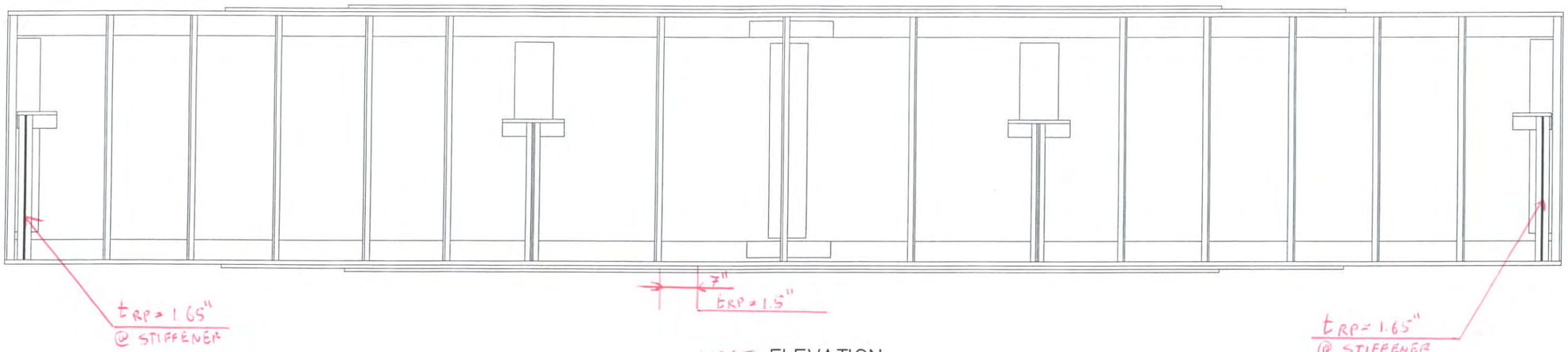

WEST ELEVATION
(LOOKING EAST)

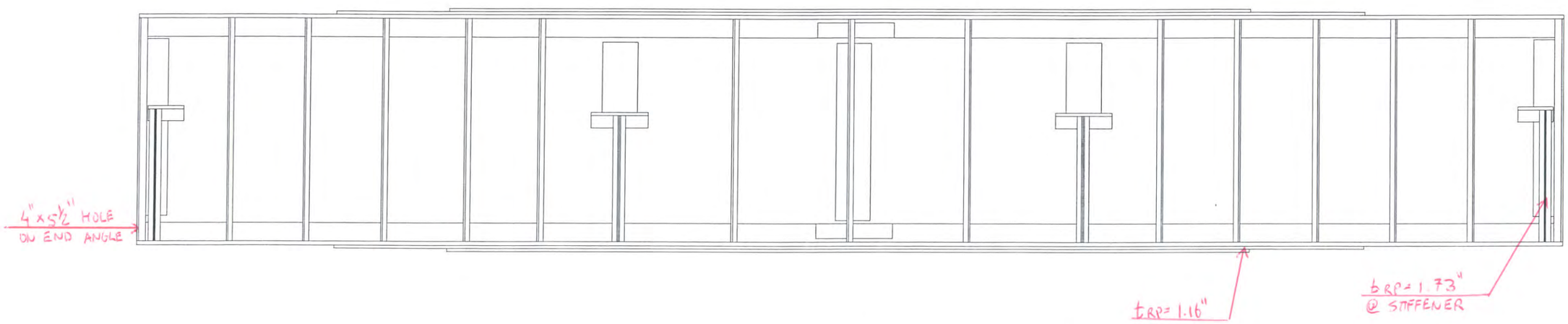

EAST ELEVATION
(LOOKING WEST)

Hoyle, Tanner Associates, Inc.
Consulting Engineers

150 Dow Street,
Manchester, NH 03101-1227
Tel 603-669-5555, Fax 603-669-4168
Web Page: www.hoyletanner.com
© Copyright 2009

SARAH LONG BRIDGE

SPAN 12 WEST GIRDER ELEVATION

INSPECTED BY: JB & EGW	DATE: 6-3-2009	SCALE: 3/16" = 1'-0" H, 3/8" = 1'-0" V

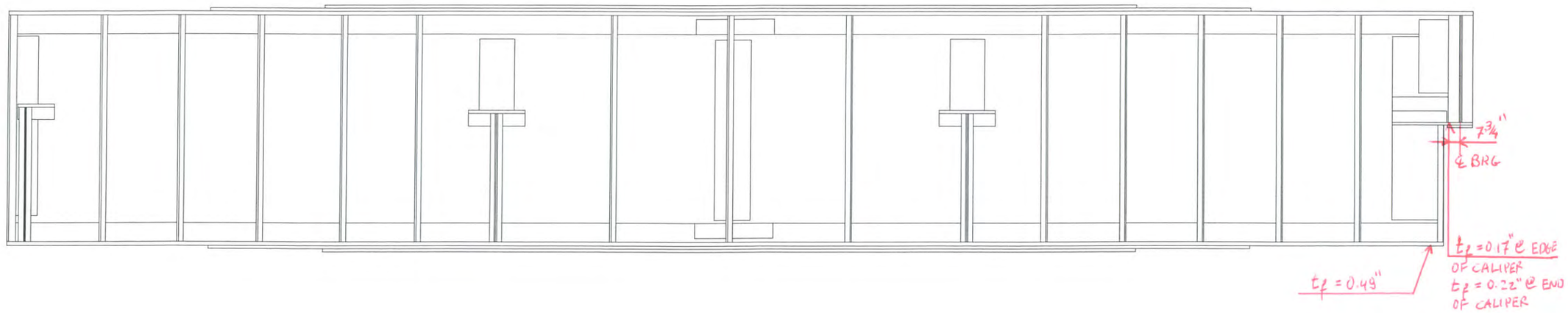

EAST ELEVATION
(LOOKING WEST)

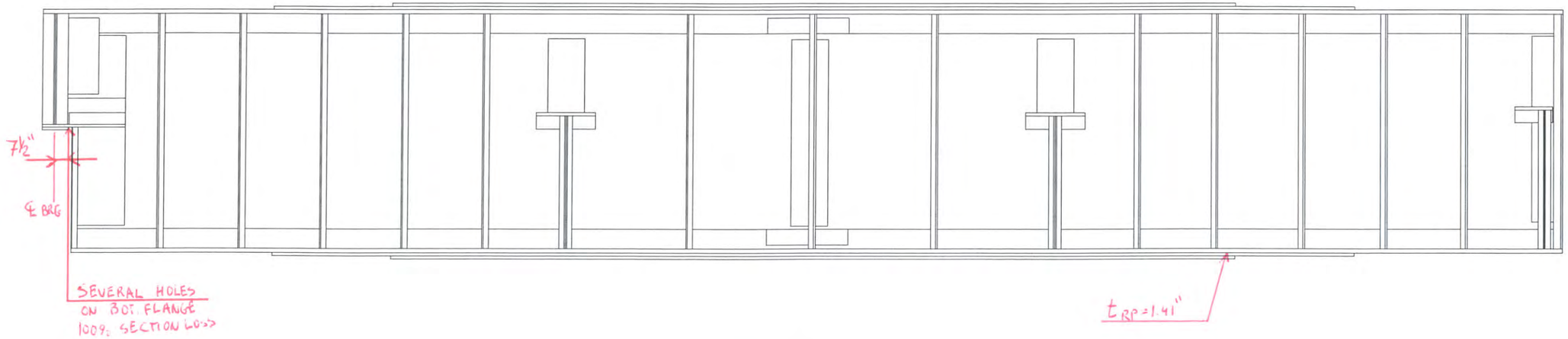

WEST ELEVATION
(LOOKING EAST)

Hoyle, Tanner Associates, Inc.
Consulting Engineers

150 Dow Street.
Manchester, NH 03101-1227
Tel 603-669-5555, Fax 603-669-4168
Web Page: www.hoyletanner.com
© Copyright 2009

SARAH LONG BRIDGE
SPAN 13 WEST GIRDER ELEVATION

INSPECTED BY: JB	DATE: 6-3-2003	SCALE: 3/16" = 1'-0" H
℄ EGW		3/8" = 1'-0" V

EAST ELEVATION
(LOOKING WEST)

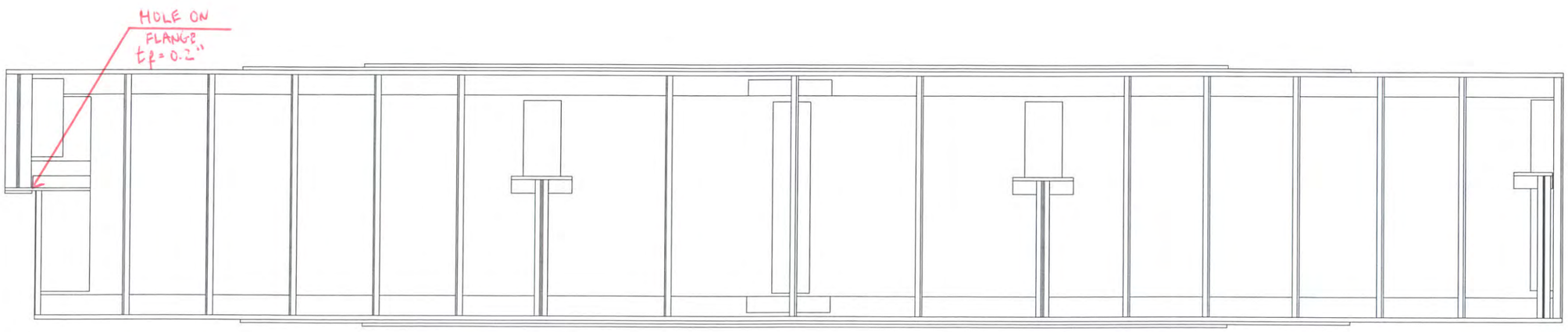

WEST ELEVATION
(LOOKING EAST)

Hoyle, Tanner Associates, Inc.
Consulting Engineers

150 Dow Street.
Manchester, NH 03101-1227
Tel 603-669-5555, Fax 603-669-4168
Web Page: www.hoyletanner.com
© Copyright 2009

SARAH LONG BRIDGE
SPAN B EAST GIRDER ELEVATION

INSPECTED BY: JB	DATE: 6-1-2009	SCALE: 3/16" = 1'-0" H
B EGW		1/8" = 1'-0" V

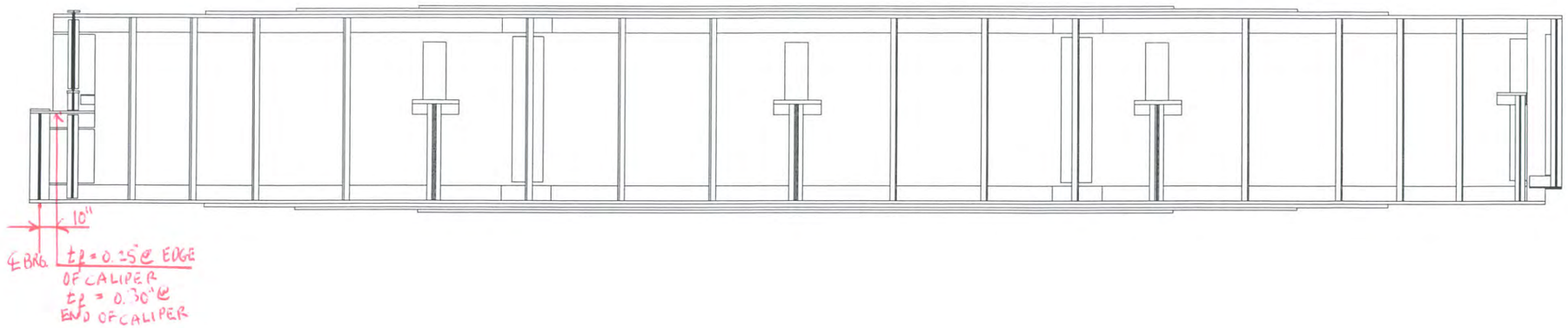

EAST ELEVATION
(LOOKING WEST)

WEST ELEVATION
(LOOKING EAST)

Hoyle, Tanner Associates, Inc.
Consulting Engineers

150 Dow Street.
Manchester, NH 03101–1227
Tel 603–669–5555, Fax 603–669–4168
Web Page: www.hoyletanner.com
© Copyright 2009

SARAH LONG BRIDGE

SPAN 14 WEST GIRDER ELEVATION

INSPECTED BY: JB	DATE: 6-3-2003	SCALE: ⅛" = 1'–0" H
± EGW		¼" = 1'–0" V

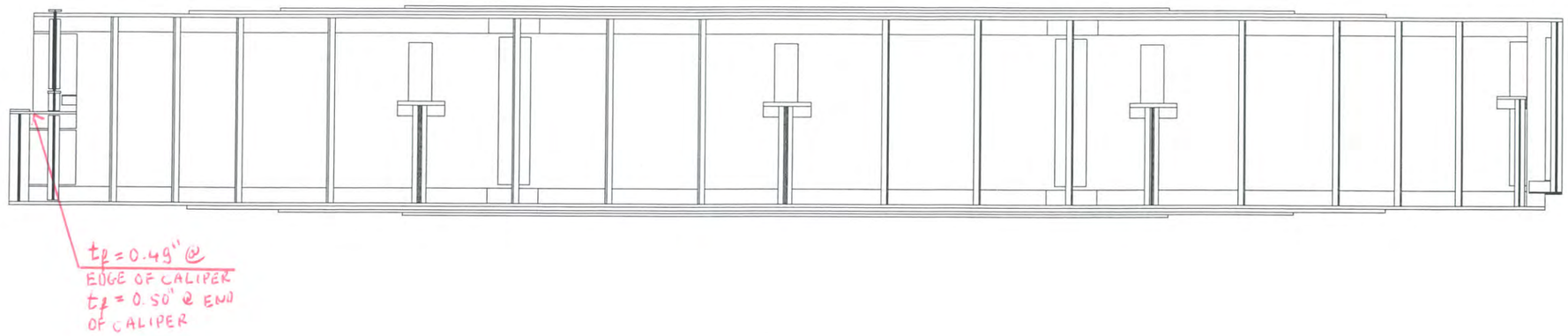

EAST ELEVATION
(LOOKING WEST)

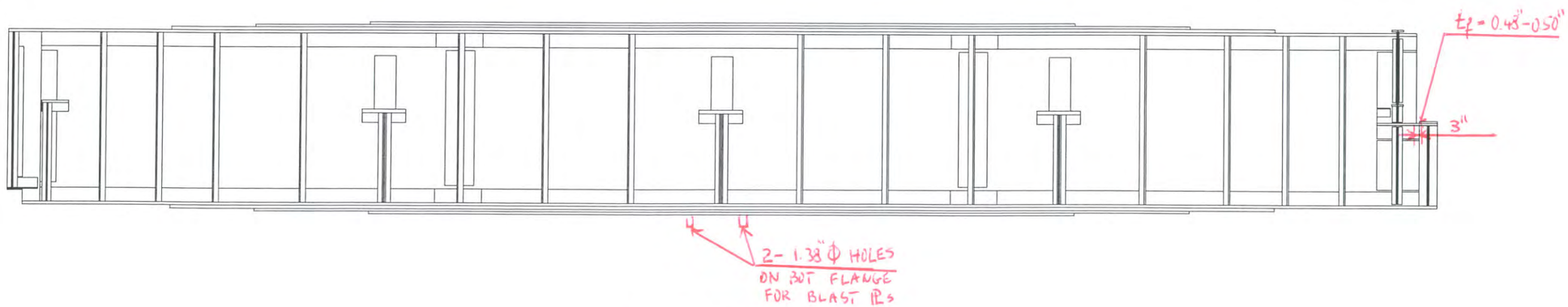

WEST ELEVATION
(LOOKING EAST)

Hoyle, Tanner Associates, Inc.
Consulting Engineers
150 Dow Street.
Manchester, NH 03101-1227
Tel 603-669-5555, Fax 603-669-4168
Web Page: www.hoyletanner.com
© Copyright 2009

SARAH LONG BRIDGE

SPAN 14 EAST GIRDER ELEVATION

INSPECTED BY: JB	DATE: 6-1-2004	SCALE: 1/8" = 1'-0" H
& EGW		1/4" = 1'-0" V

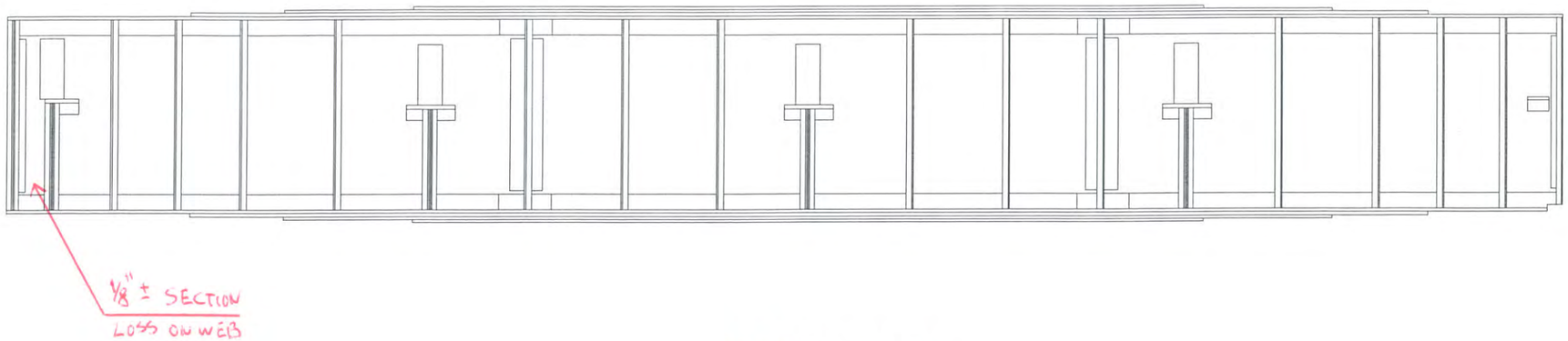

WEST ELEVATION
(LOOKING EAST)

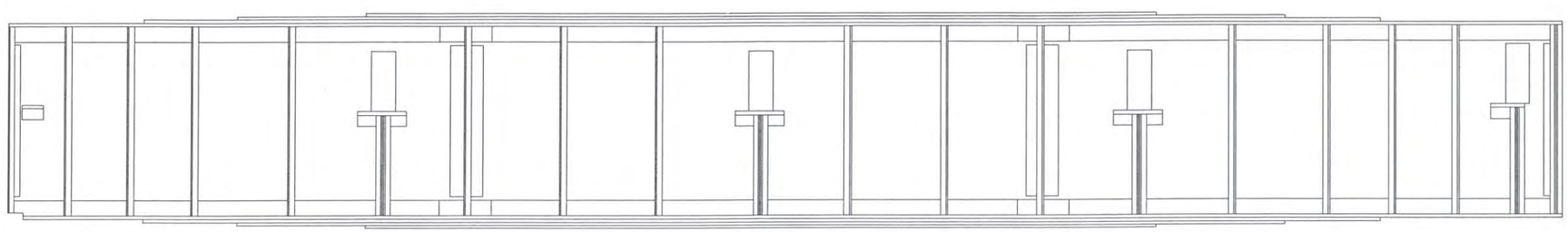

EAST ELEVATION
(LOOKING WEST)

Hoyle, Tanner Associates, Inc.
Consulting Engineers

150 Dow Street.
Manchester, NH 03101-1227
Tel 603-669-5555, Fax 603-669-4168
Web Page: www.hoyletanner.com
© Copyright 2009

SARAH LONG BRIDGE
SPAN 15 EAST GIRDER ELEVATION

INSPECTED BY: JB	DATE: 5-28-2009	SCALE: 1/8" = 1'-0" H
& EGW	& 6-1-2009	1/4" = 1'-0" V

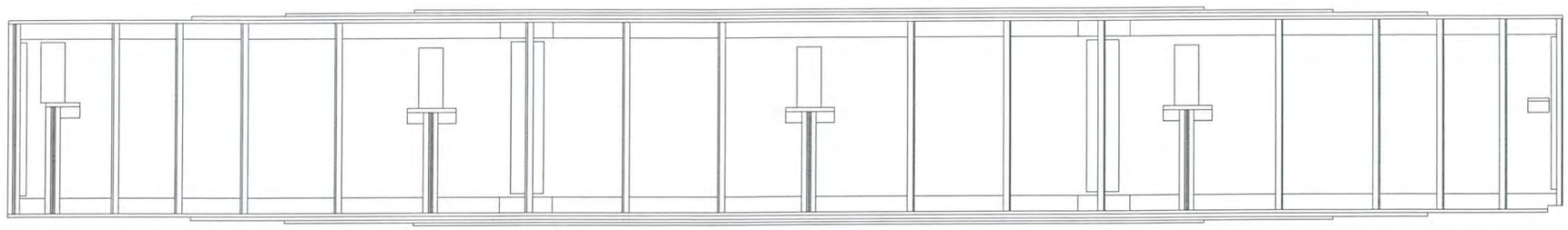

EAST ELEVATION
(LOOKING WEST)

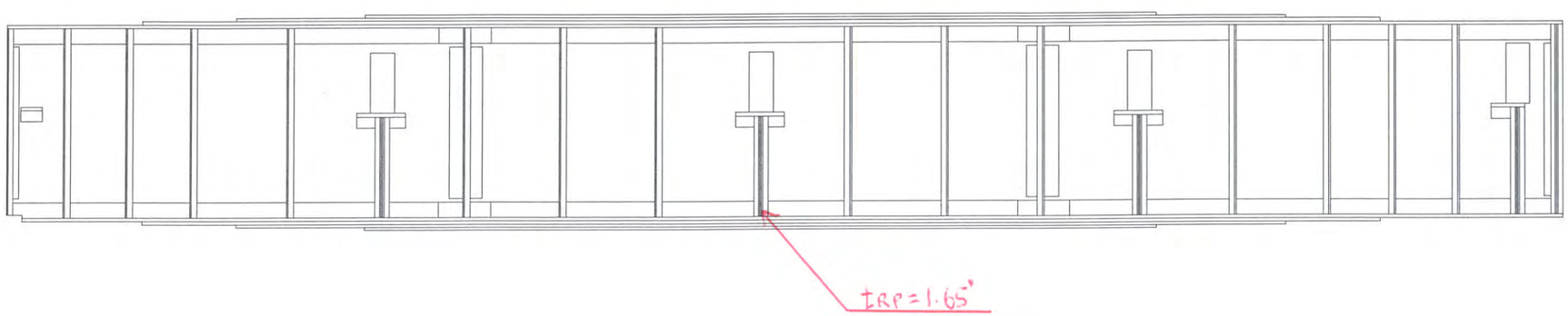

WEST ELEVATION
(LOOKING EAST)

Hoyle, Tanner Associates, Inc.
Consulting Engineers
150 Dow Street.
Manchester, NH 03101-1227
Tel 603-669-5555, Fax 603-669-4168
Web Page: www.hoyletanner.com
© Copyright 2009

SARAH LONG BRIDGE

SPAN 15 WEST GIRDER ELEVATION

INSPECTED BY: JB & EGW	DATE: 5-28-03	SCALE: ⅛" = 1'-0" H ¼" = 1'-0" V

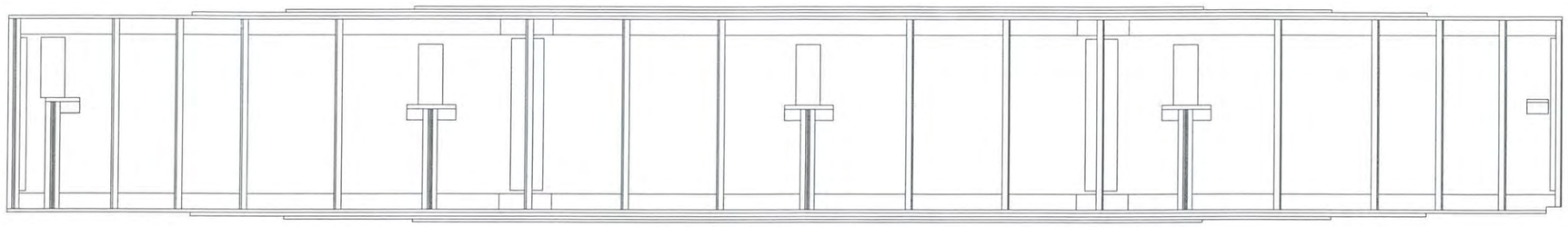

EAST ELEVATION
(LOOKING WEST)

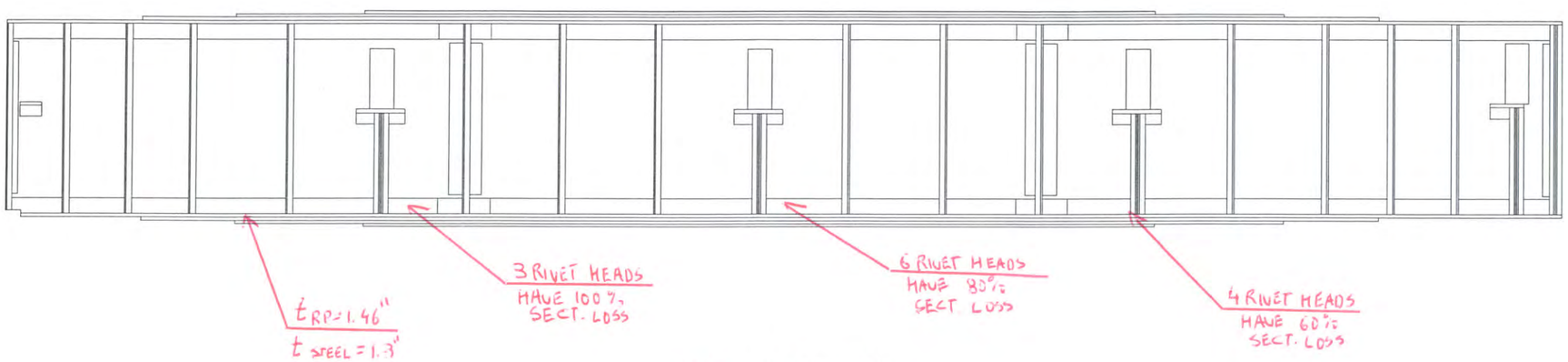

WEST ELEVATION
(LOOKING EAST)

Hoyle, Tanner Associates, Inc.
Consulting Engineers
150 Dow Street,
Manchester, NH 03101-1227
Tel 603-669-5555, Fax 603-669-4168
Web Page: www.hoyletanner.com
© Copyright 2009

SARAH LONG BRIDGE
SPAN 21 WEST GIRDER ELEVATION

INSPECTED BY: JB & EGW	DATE: 6-4-2009	SCALE: 1/8" = 1'-0" H 1/4" = 1'-0" V

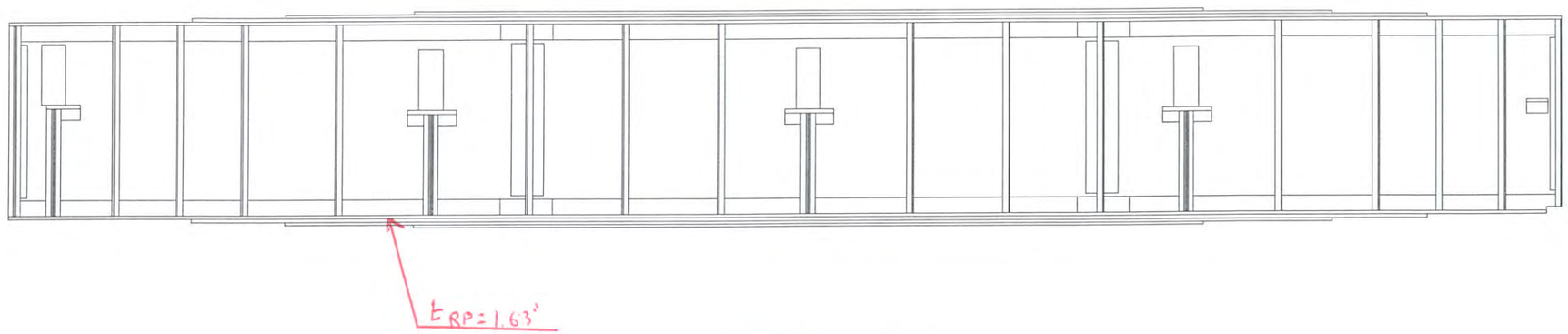

EAST ELEVATION
(LOOKING WEST)

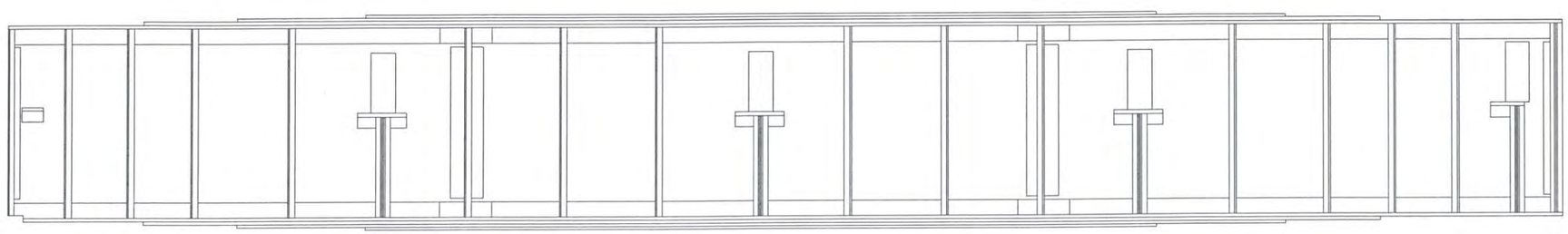

WEST ELEVATION
(LOOKING EAST)

Hoyle, Tanner Associates, Inc.
Consulting Engineers

150 Dow Street,
Manchester, NH 03101-1227
Tel 603-669-5555, Fax 603-669-4168
Web Page: www.hoyletanner.com
© Copyright 2009

SARAH LONG BRIDGE

SPAN 21 EAST GIRDER ELEVATION

INSPECTED BY: JB & EGW	DATE: 6-2-2009	SCALE: ⅛" = 1'-0" H ¼" = 1'-0" V

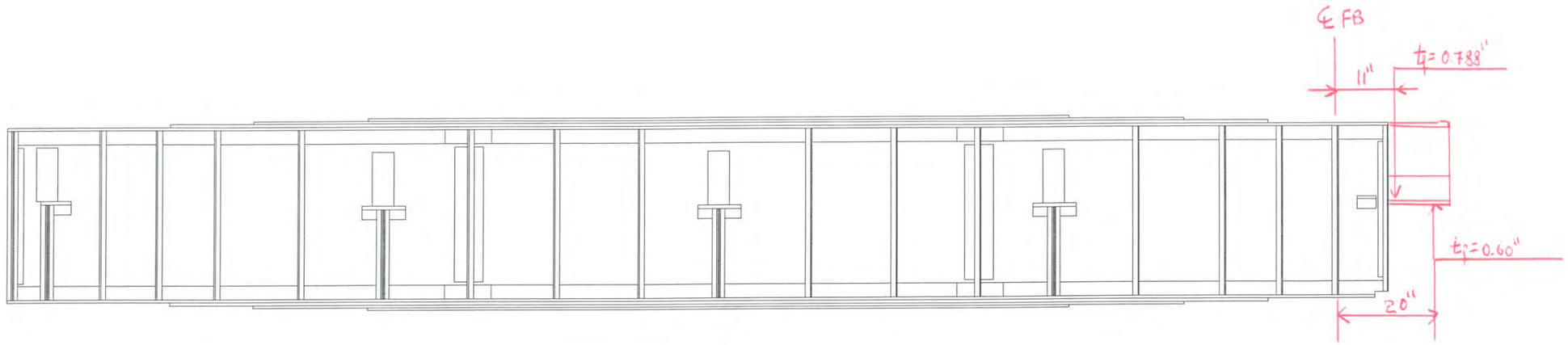

WEST ELEVATION
(LOOKING EAST)

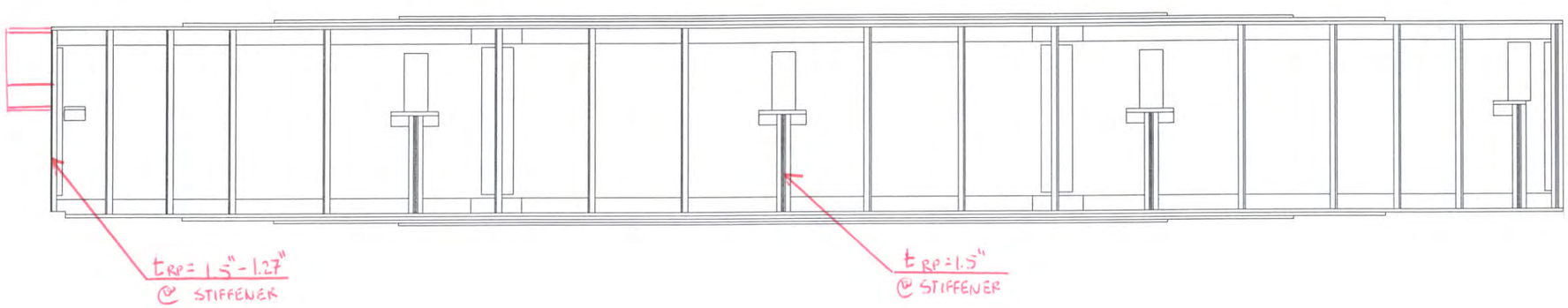

EAST ELEVATION
(LOOKING WEST)

Hoyle, Tanner Associates, Inc.
Consulting Engineers
150 Dow Street.
Manchester, NH 03101-1227
Tel 603-669-5555, Fax 603-669-4168
Web Page: www.hoyletanner.com
© Copyright 2009

SARAH LONG BRIDGE
SPAN 22 EAST GIRDER ELEVATION

INSPECTED BY: JB & EGW	DATE: 6-6-09	SCALE: ⅛" = 1'-0" H ¼" = 1'-0" V

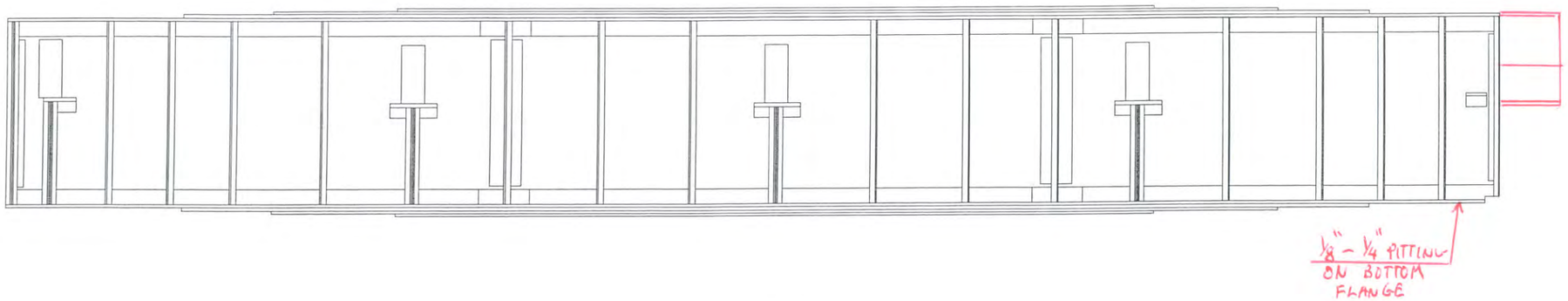

WEST ELEVATION
(LOOKING EAST)

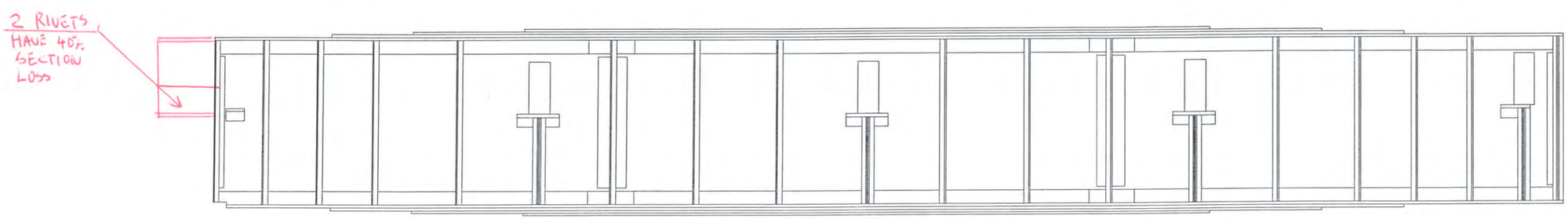

EAST ELEVATION
(LOOKING WEST)

Hoyle, Tanner Associates, Inc.
Consulting Engineers

150 Dow Street
Manchester, NH 03101-1227
Tel 603-669-5555, Fax 603-669-4168
Web Page: www.hoyletanner.com
© Copyright 2009

SARAH LONG BRIDGE

SPAN 22 WEST GIRDER ELEVATION

INSPECTED BY: JB & EGW	DATE: 6-4-09	SCALE: 1/8" = 1'-0" H 1/4" = 1'-0" V

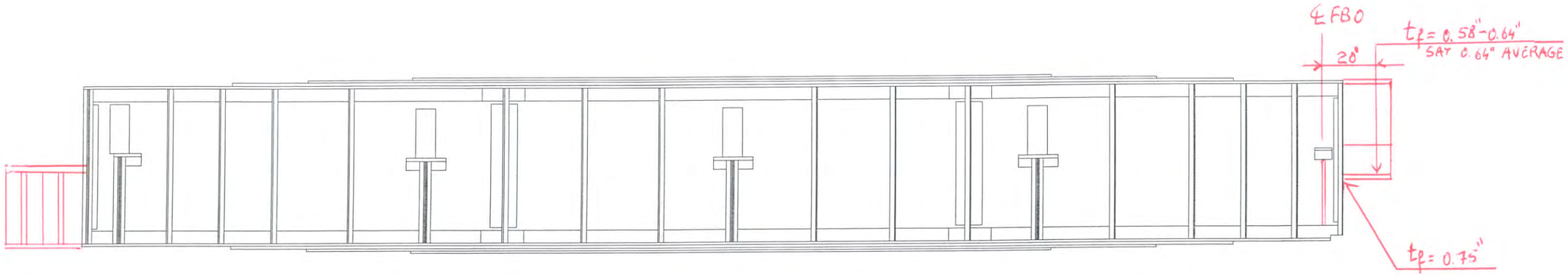

WEST ELEVATION
(LOOKING EAST)

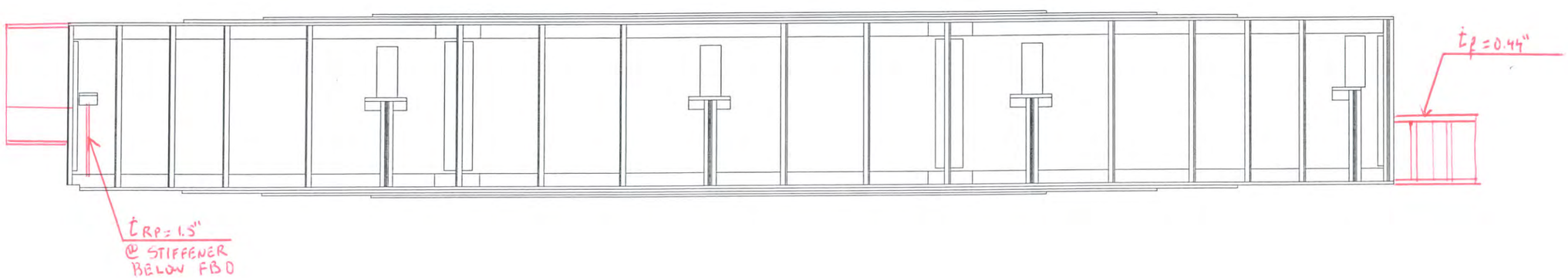

EAST ELEVATION
(LOOKING WEST)

Hoyle, Tanner Associates, Inc.
Consulting Engineers
150 Dow Street
Manchester, NH 03101-1227
Tel 603-669-5555, Fax 603-669-4168
Web Page: www.hoyletanner.com
© Copyright 2009

SARAH LONG BRIDGE
SPAN 23 EAST GIRDER ELEVATION

INSPECTED BY: JB	DATE: 6-6-2009	SCALE: ⅛" = 1'-0" H
@ EGW		¼" = 1'-0" V

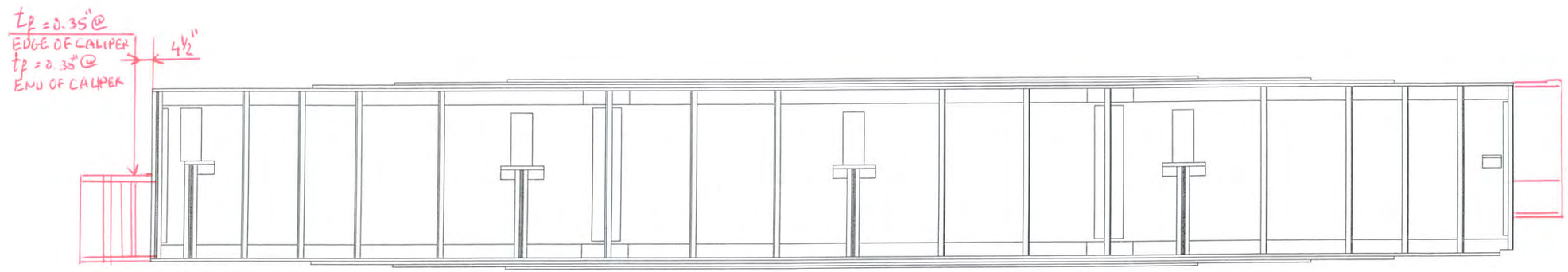

WEST ELEVATION
(LOOKING EAST)

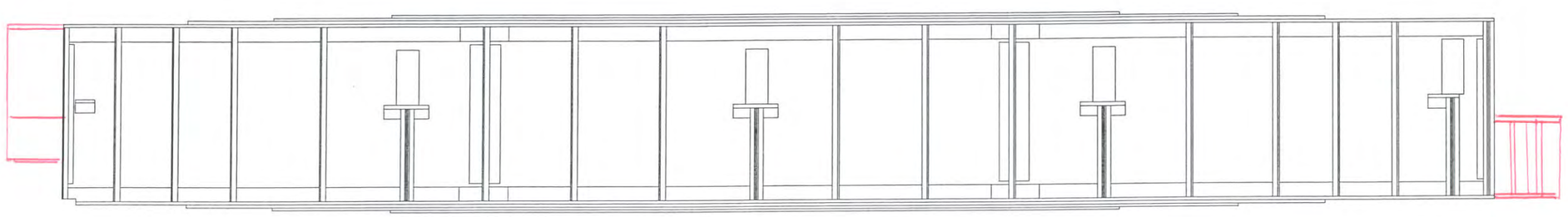

EAST ELEVATION
(LOOKING WEST)

Hoyle, Tanner Associates, Inc.
Consulting Engineers

150 Dow Street
Manchester, NH 03101-1227
Tel 603-669-5555, Fax 603-669-4168
Web Page: www.hoyletanner.com
© Copyright 2009

SARAH LONG BRIDGE

SPAN 23 WEST GIRDER ELEVATION

INSPECTED BY: JB & EGW	DATE: 6-4-2009	SCALE: ⅛" = 1'-0" H ¼" = 1'-0" V

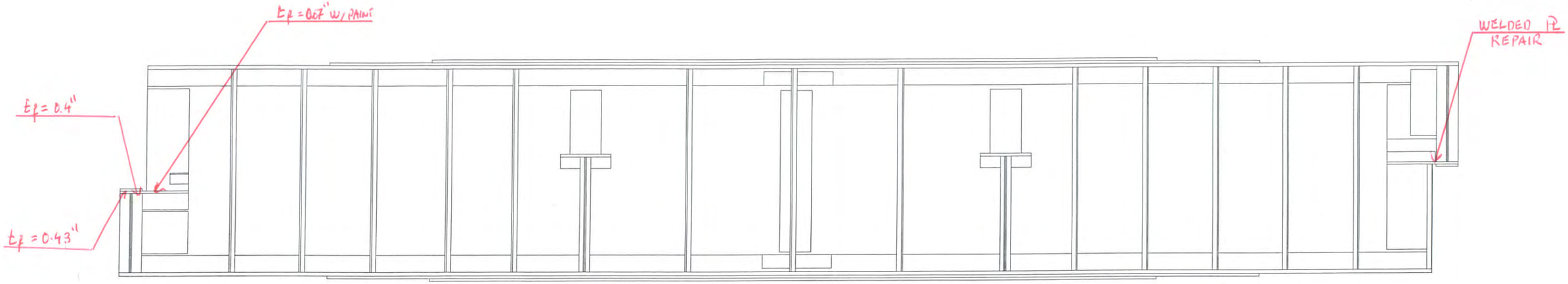

WEST ELEVATION
(LOOKING EAST)

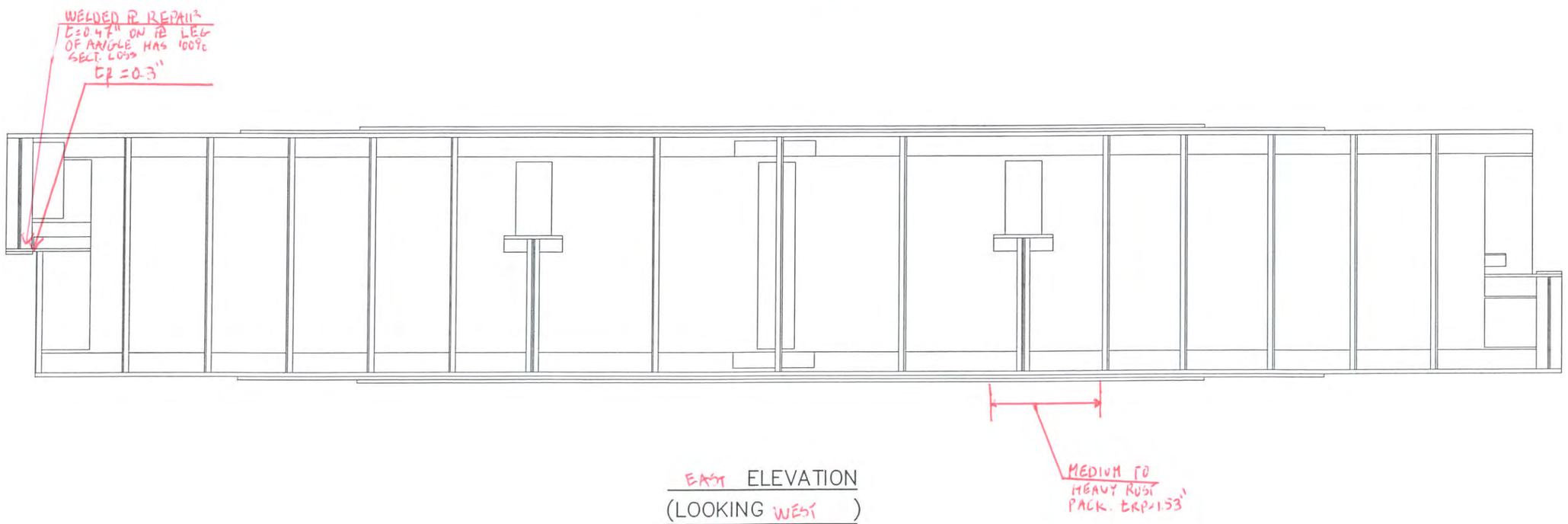

EAST ELEVATION
(LOOKING WEST)

Hoyle, Tanner Associates, Inc.
Consulting Engineers
150 Dow Street.
Manchester, NH 03101–1227
Tel 603–669–5555, Fax 603–669–4168
Web Page: www.hoyletanner.com
© Copyright 2009

SARAH LONG BRIDGE
SPAN 24 EAST GIRDER ELEVATION

INSPECTED BY: JB	DATE: 6-6-2009	SCALE: 3/16" = 1'–0" H
A EGW		3/8" = 1'–0" V

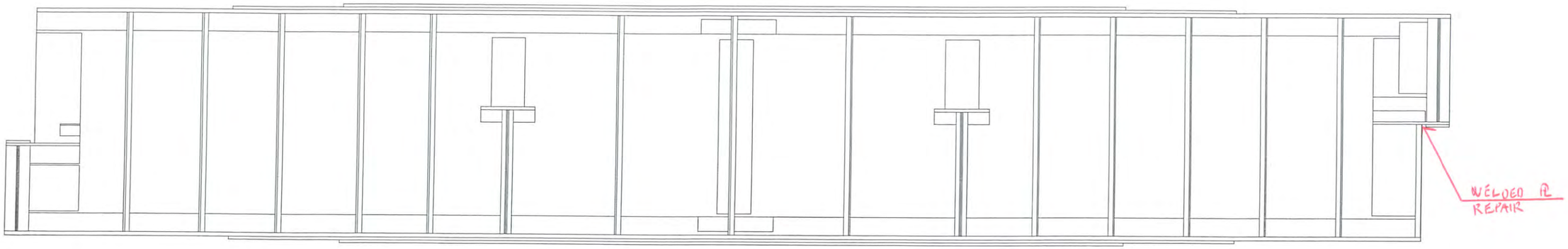

WEST ELEVATION
(LOOKING EAST)

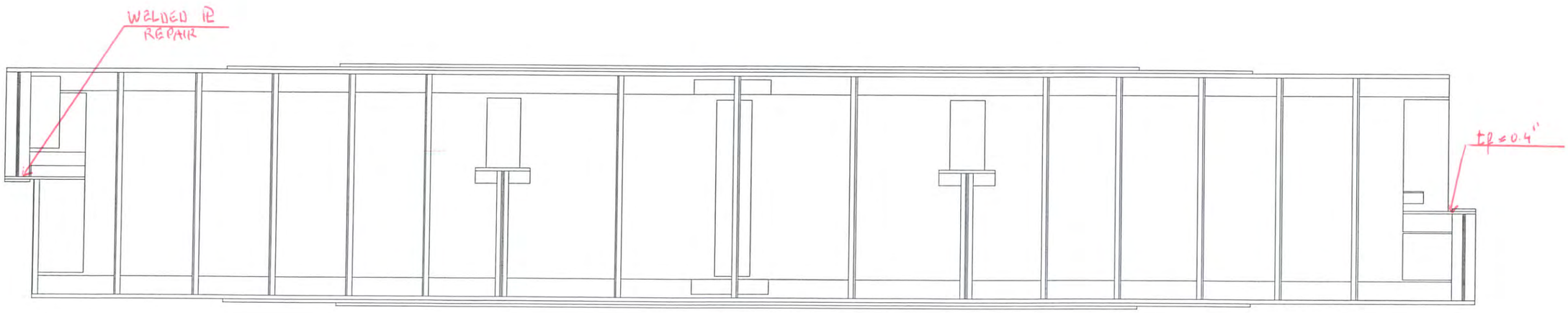

EAST ELEVATION
(LOOKING WEST)

Hoyle, Tanner Associates, Inc.
Consulting Engineers
150 Dow Street.
Manchester, NH 03101-1227
Tel 603-669-5555, Fax 603-669-4168
Web Page: www.hoyletanner.com
© Copyright 2009

SARAH LONG BRIDGE
SPAN 24 WEST GIRDER ELEVATION

INSPECTED BY: JJ & EGN	DATE: 6-6-2003	SCALE: 3/16" = 1'-0" H 3/8" = 1'-0" V

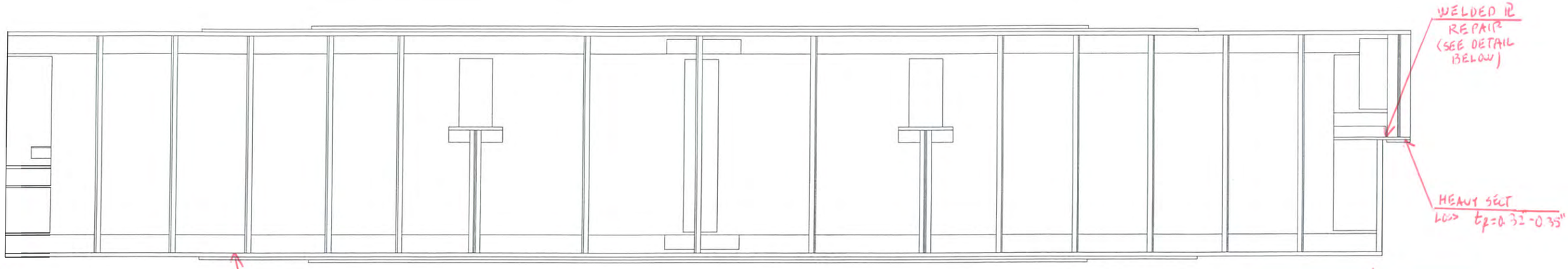

WEST ELEVATION
(LOOKING EAST)

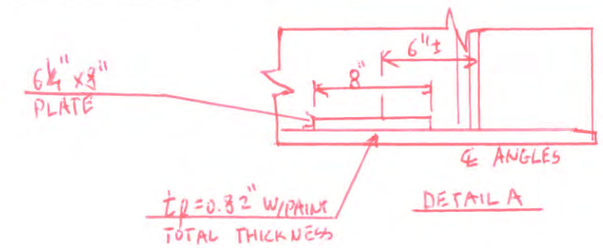

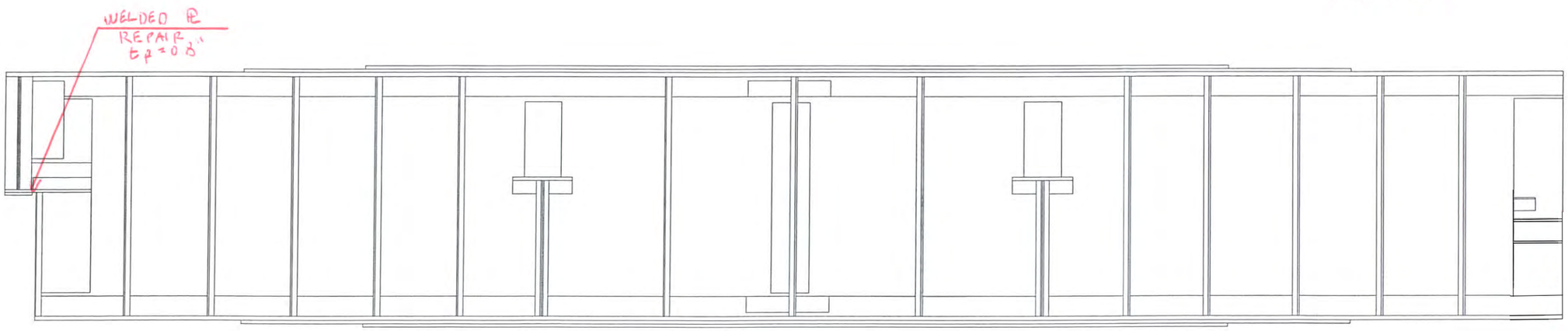

EAST ELEVATION
(LOOKING WEST)

Hoyle, Tanner Associates, Inc.
Consulting Engineers

150 Dow Street.
Manchester, NH 03101-1227
Tel 603-669-5555, Fax 603-669-4168
Web Page: www.hoyletanner.com
© Copyright 2009

SARAH LONG BRIDGE
SPAN 25 WEST GIRDER ELEVATION

INSPECTED BY: JB & EGW	DATE: 6-6-2004	SCALE: 3/16" = 1'-0" H 3/8" = 1'-0" V

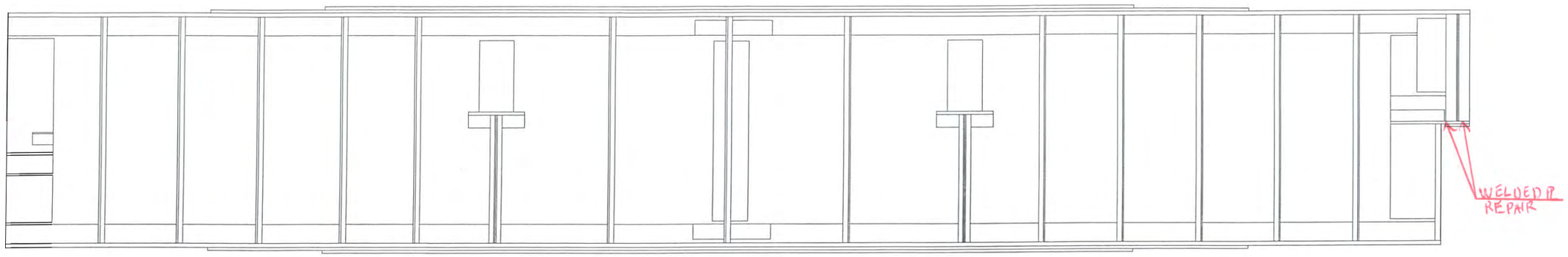

WEST ELEVATION
(LOOKING EAST)

EAST ELEVATION
(LOOKING WEST)

Hoyle, Tanner Associates, Inc.
Consulting Engineers

150 Dow Street.
Manchester, NH 03101-1227
Tel 603-669-5555, Fax 603-669-4168
Web Page: www.hoyletanner.com
© Copyright 2009

SARAH LONG BRIDGE
SPAN 25 EAST GIRDER ELEVATION

INSPECTED BY: JB	DATE: 6-6-2003	SCALE: 3/16" = 1'-0" H
#EGW		3/8" = 1'-0" V

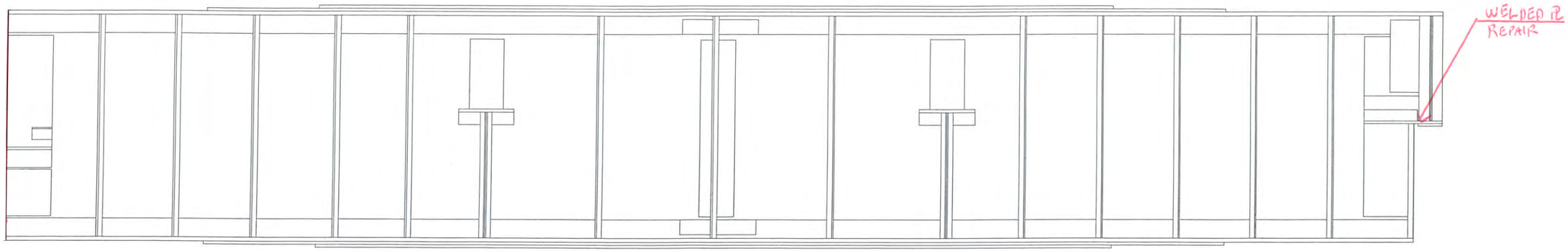

WEST ELEVATION
(LOOKING EAST)

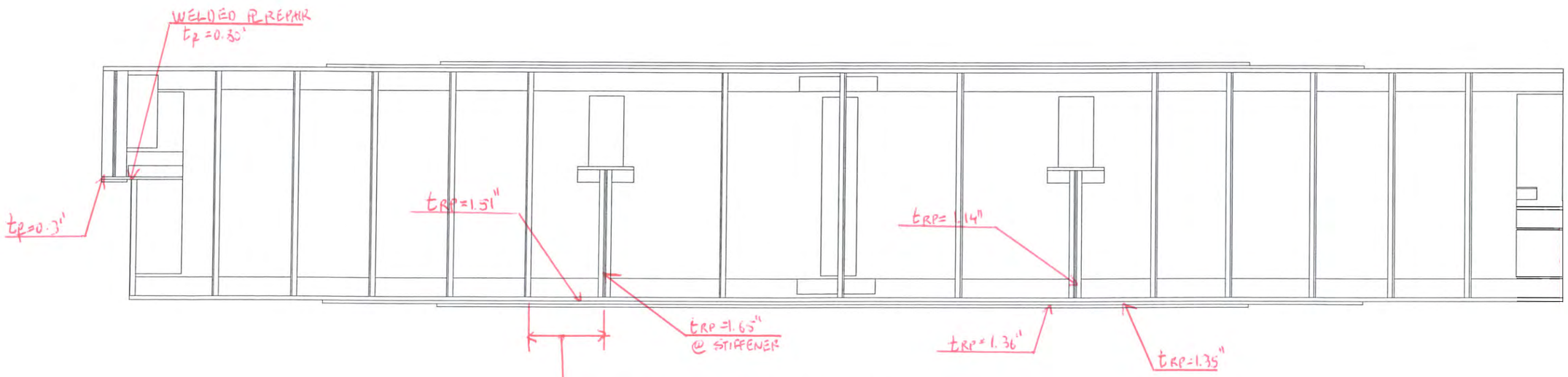

EAST ELEVATION
(LOOKING WEST)

Hoyle, Tanner Associates, Inc.
Consulting Engineers

150 Dow Street.
Manchester, NH 03101–1227
Tel 603–669–5555, Fax 603–669–4168
Web Page: www.hoyletanner.com
© Copyright 2009

SARAH LONG BRIDGE
SPAN 26 EAST GIRDER ELEVATION

INSPECTED BY: JB & EGW	DATE: 6-2-2009	SCALE: 3/16" = 1'–0" H 3/8" = 1'–0" V

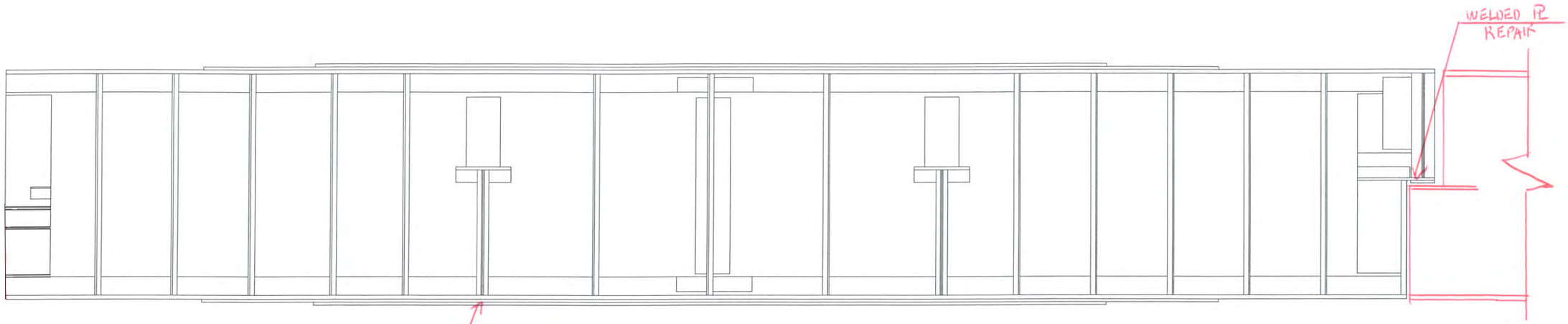

WEST ELEVATION
(LOOKING EAST)

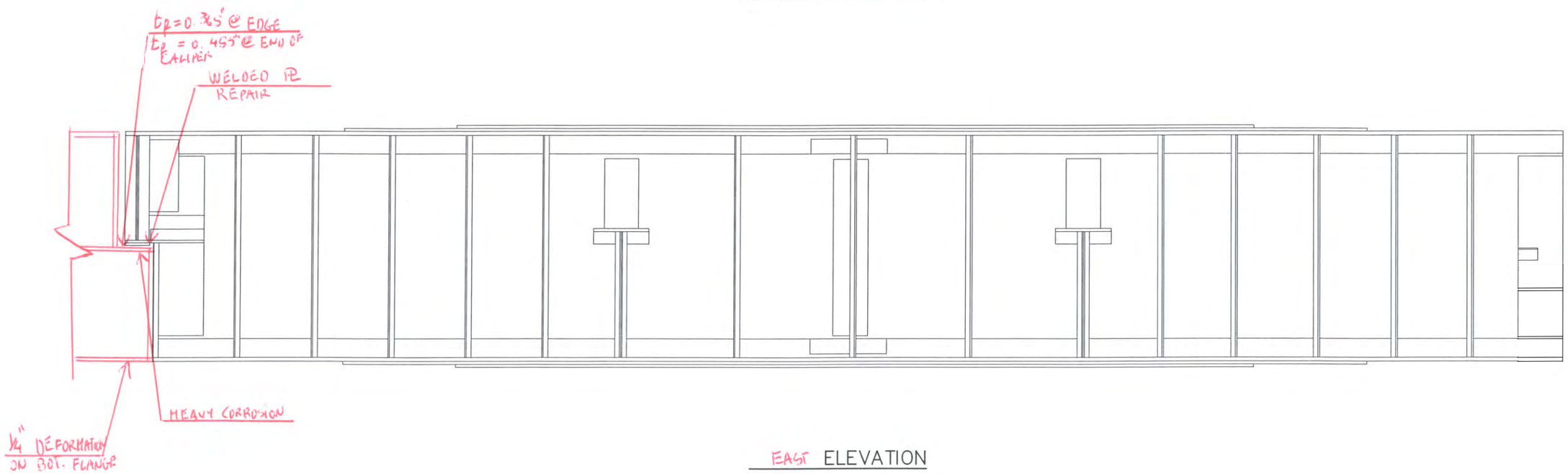

EAST ELEVATION
(LOOKING WEST)

Hoyle, Tanner Associates, Inc.
Consulting Engineers
150 Dow Street.
Manchester, NH 03101–1227
Tel 603–669–5555, Fax 603–669–4168
Web Page: www.hoyletanner.com
© Copyright 2009

SARAH LONG BRIDGE
SPAN 26 WEST GIRDER ELEVATION

INSPECTED BY: JB & EGW	DATE: 6-4-2008	SCALE: 3/16" = 1'-0" H 3/8" = 1'-0" V

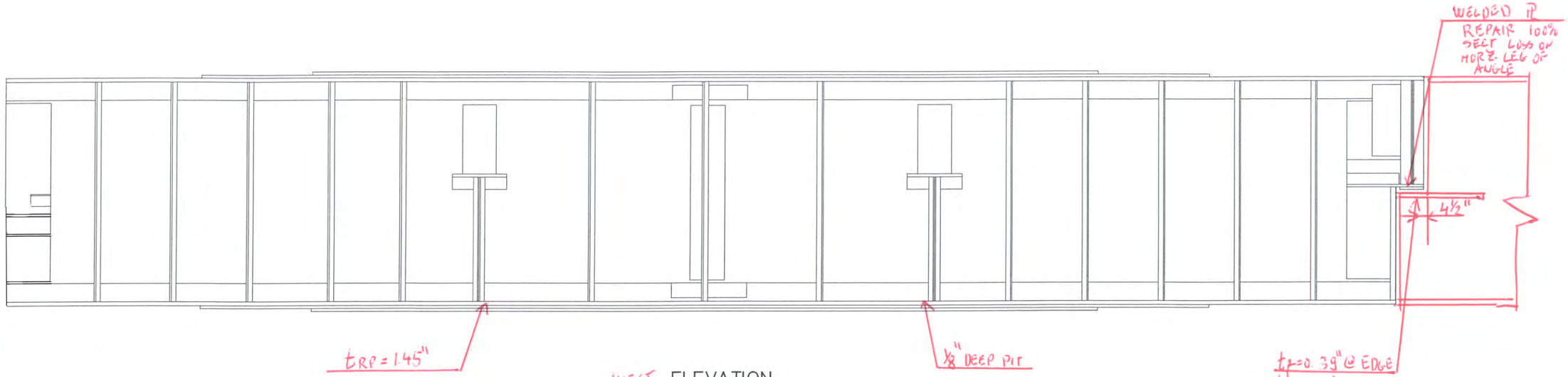

WEST ELEVATION
(LOOKING EAST)

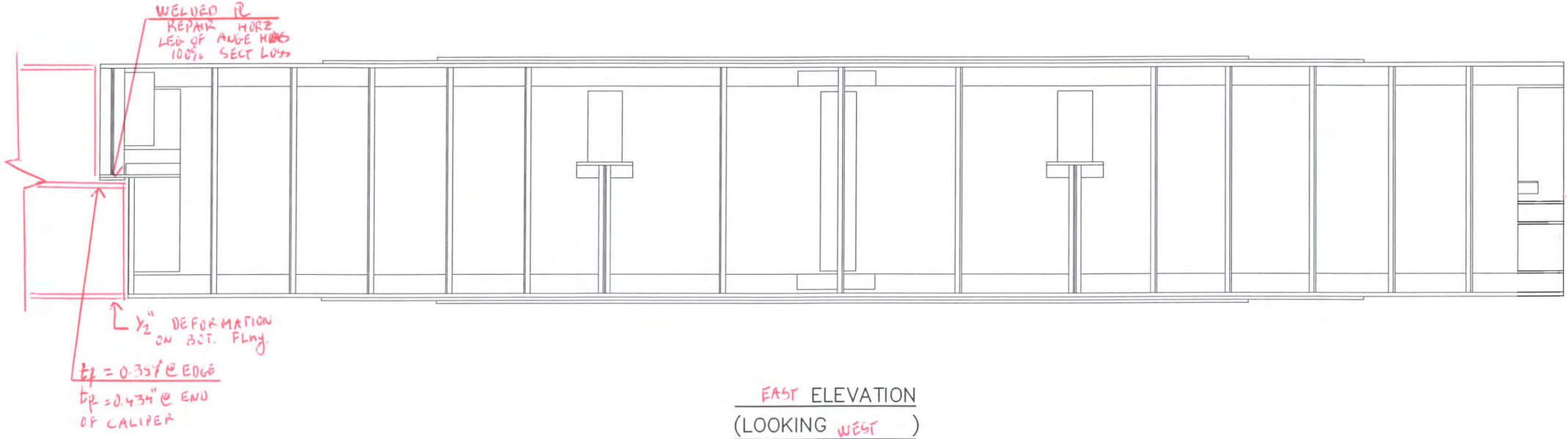

EAST ELEVATION
(LOOKING WEST)

Hoyle, Tanner Associates, Inc.
Consulting Engineers

150 Dow Street.
Manchester, NH 03101-1227
Tel 603-669-5555, Fax 603-669-4168
Web Page: www.hoyletanner.com
© Copyright 2009

SARAH LONG BRIDGE
SPAN 27 WEST GIRDER ELEVATION

INSPECTED BY: JB	DATE:	SCALE: 3/16" = 1'-0" H
EGW		3/8" = 1'-0" V

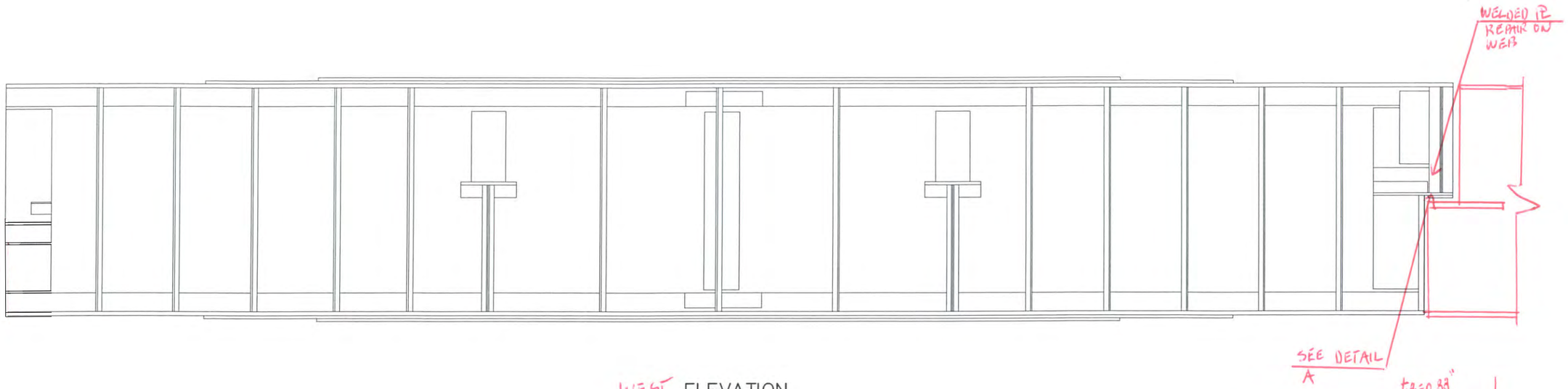

WEST ELEVATION
(LOOKING EAST)

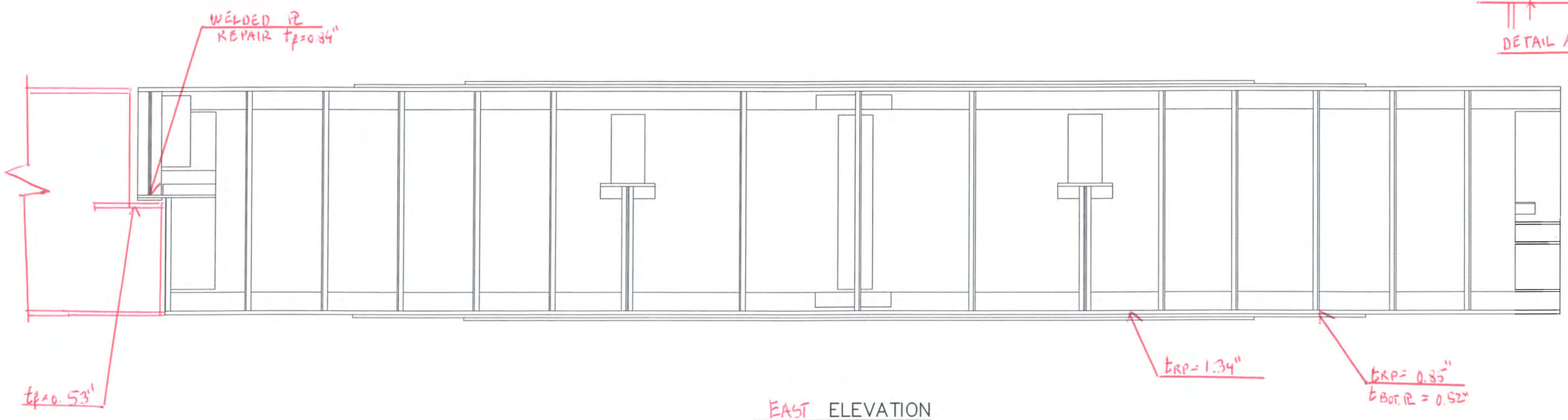

EAST ELEVATION
(LOOKING WEST)

Hoyle, Tanner Associates, Inc.
Consulting Engineers

150 Dow Street.
Manchester, NH 03101-1227
Tel 603-669-5555, Fax 603-669-4168
Web Page: www.hoyletanner.com
© Copyright 2009

SARAH LONG BRIDGE
SPAN 27 EAST GIRDER ELEVATION

INSPECTED BY: JTB & EGW	DATE:	SCALE: 3/16" = 1'-0" H 3/8" = 1'-0" V

Section B:

Floorbeam Condition

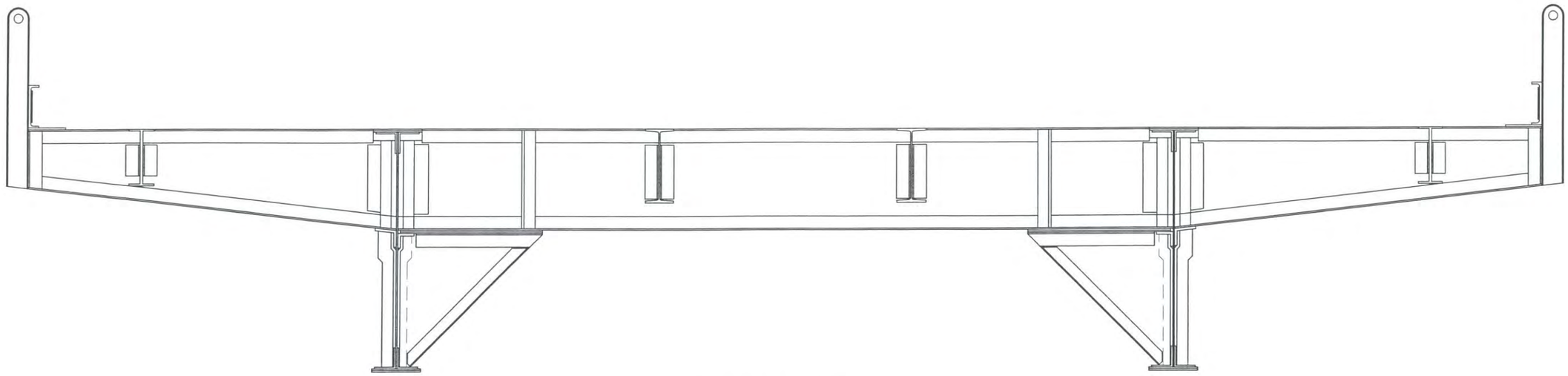

NORTH ELEVATION
(LOOKING SOUTH)

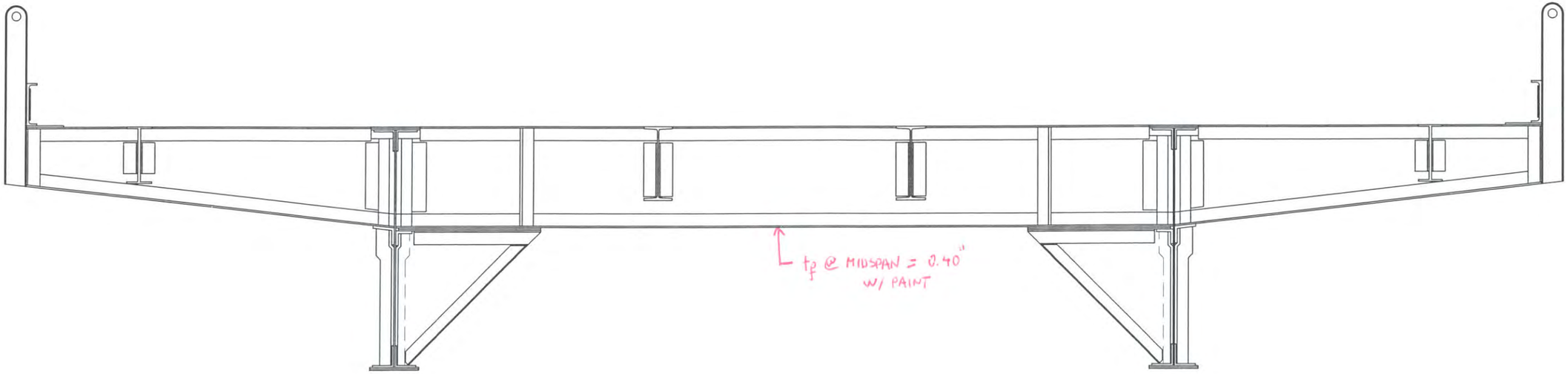

SOUTH ELEVATION
(LOOKING NORTH)

Hoyle, Tanner Associates, Inc.
Consulting Engineers
150 Dow Street.
Manchester, NH 03101–1227
Tel 603–669–5555, Fax 603–669–4168
Web Page: www.hoyletanner.com
© Copyright 2009

SARAH LONG BRIDGE
SPAN 1 FLOOR BEAM 0

INSPECTED BY: JB	DATE: 5-29-2009	SCALE: ⅜" = 1'–0"
EGW	6-5-2009	

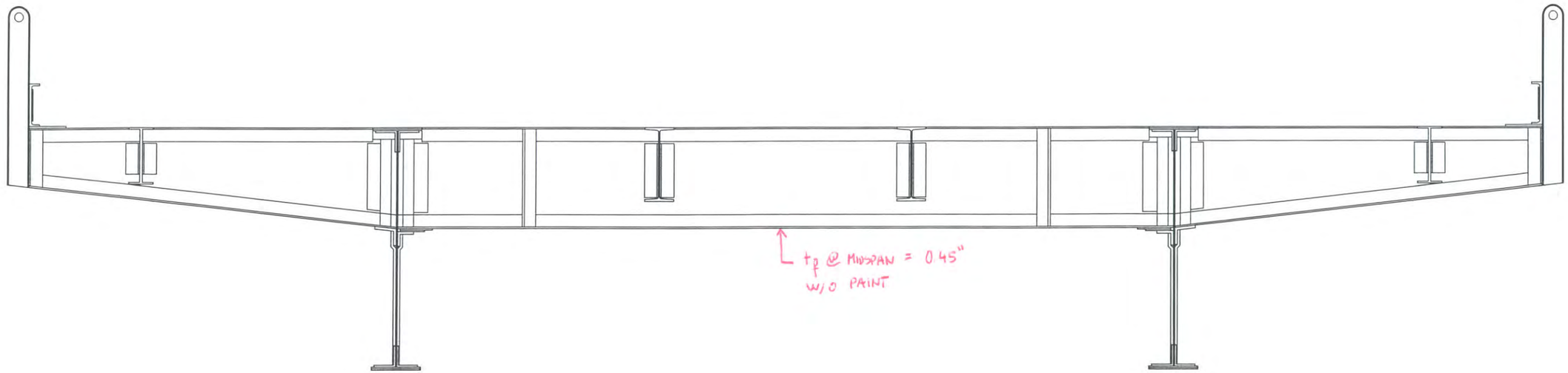

NORTH ELEVATION
(LOOKING SOUTH)

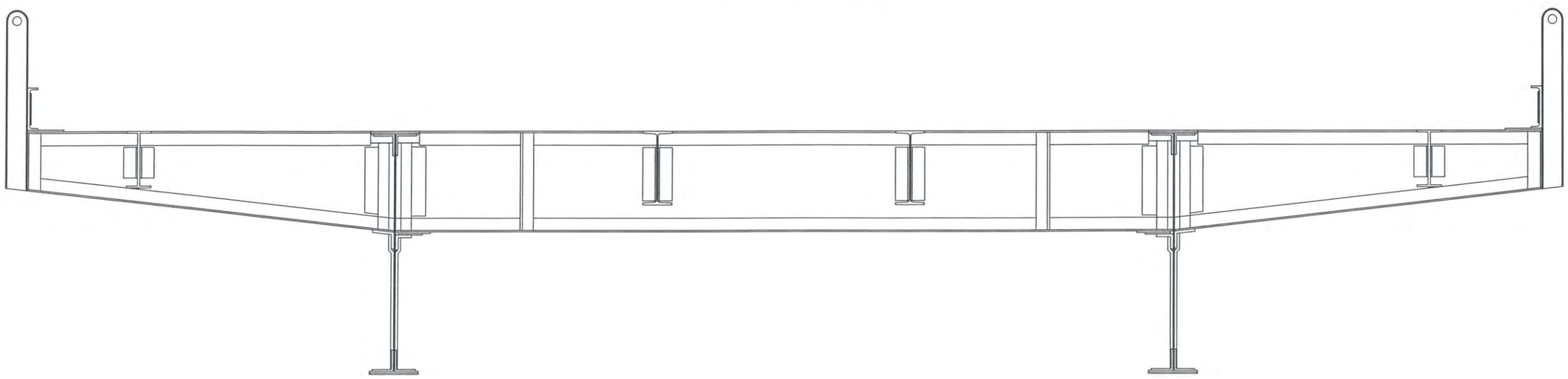

SOUTH ELEVATION
(LOOKING NORTH)

Hoyle, Tanner Associates, Inc.
Consulting Engineers
150 Dow Street.
Manchester, NH 03101-1227
Tel 603-669-5555, Fax 603-669-4168
Web Page: www.hoyletanner.com
© Copyright 2009

SARAH LONG BRIDGE
SPAN 1 FLOOR BEAM 1

INSPECTED BY: JTB	DATE: 2-24-2009	SCALE: ⅜" = 1'-0"
# EGW	6-5-2009	

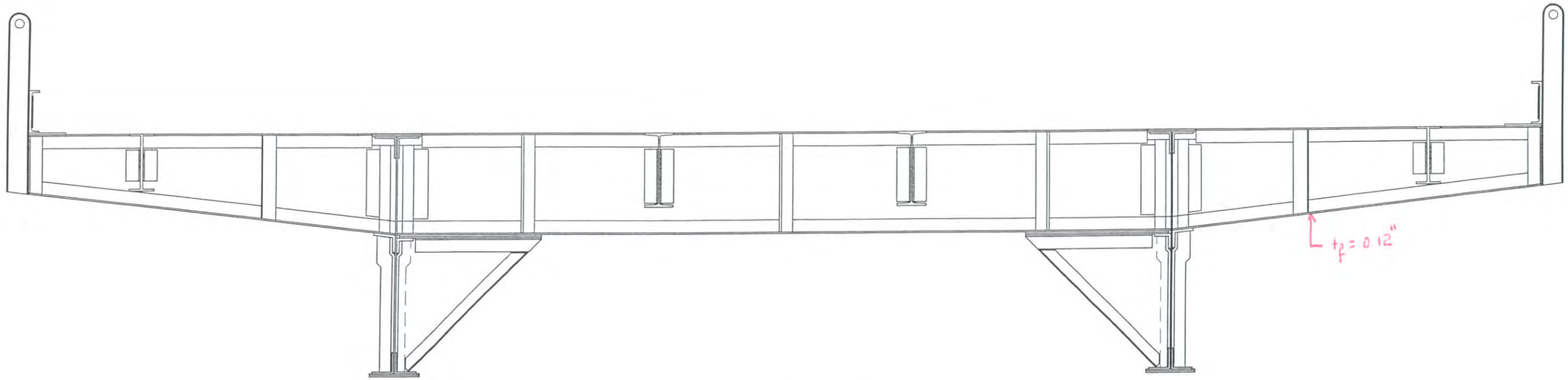

NORTH ELEVATION
(LOOKING SOUTH)

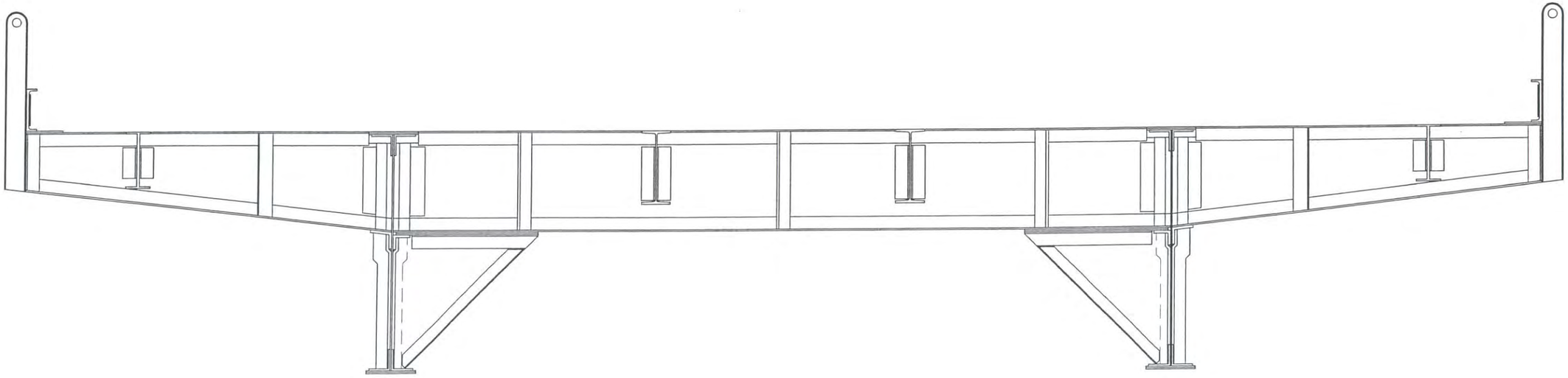

SOUTH ELEVATION
(LOOKING NORTH)

Hoyle, Tanner Associates, Inc.
Consulting Engineers
150 Dow Street.
Manchester, NH 03101-1227
Tel 603-669-5555, Fax 603-669-4168
Web Page: www.hoyletanner.com
© Copyright 2009

SARAH LONG BRIDGE
SPAN 1 FLOOR BEAM 3

INSPECTED BY: JB & EGW	DATE: 5-29-2003 6-5-2003	SCALE: 3/8" = 1'-0"

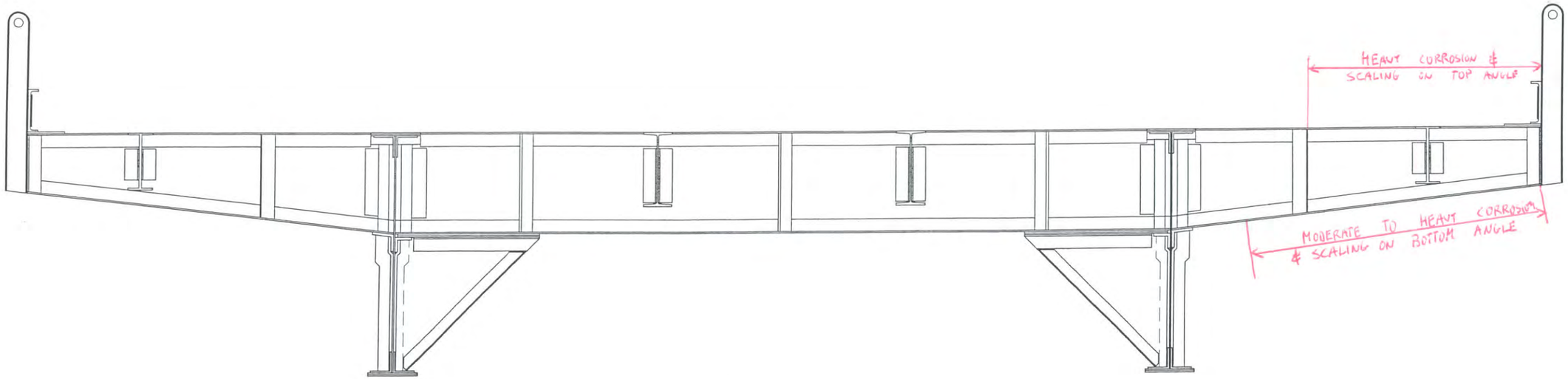

NORTH ELEVATION
(LOOKING SOUTH)

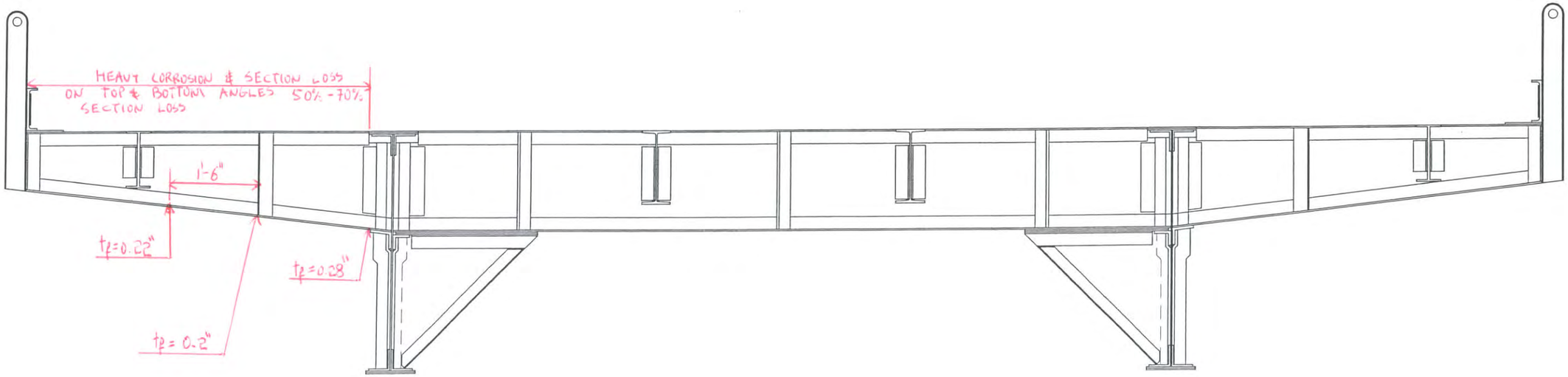

SOUTH ELEVATION
(LOOKING NORTH)

Hoyle, Tanner Associates, Inc.
Consulting Engineers

150 Dow Street,
Manchester, NH 03101-1227
Tel 603-669-5555, Fax 603-669-4168
Web Page: www.hoyletanner.com
© Copyright 2009

SARAH LONG BRIDGE
SPAN 2 FLOOR BEAM 0

INSPECTED BY: JB & FGW	DATE: 5-29-2009 6-5-2009	SCALE: 3/8" = 1'-0"

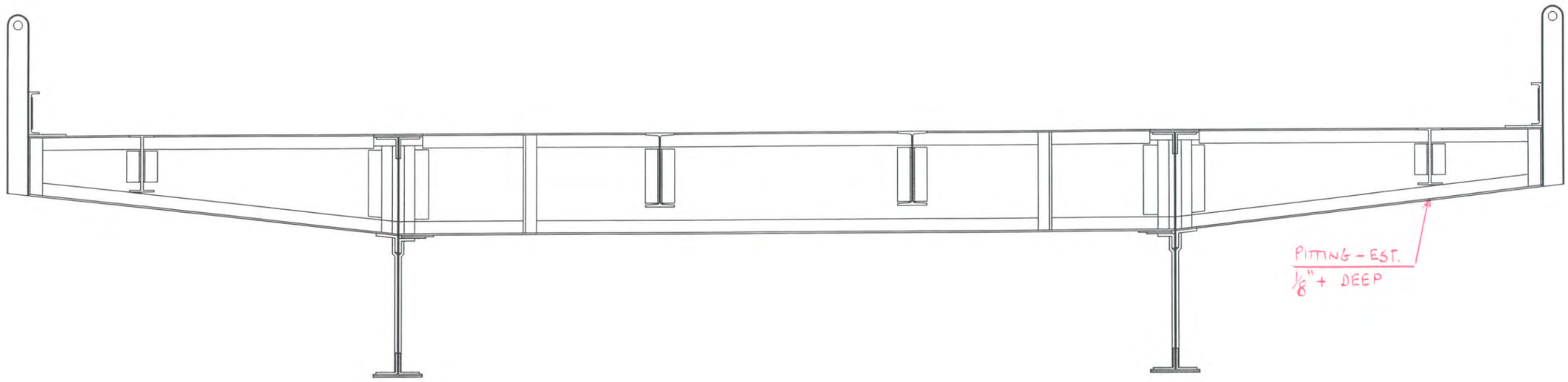

NORTH ELEVATION
(LOOKING SOUTH)

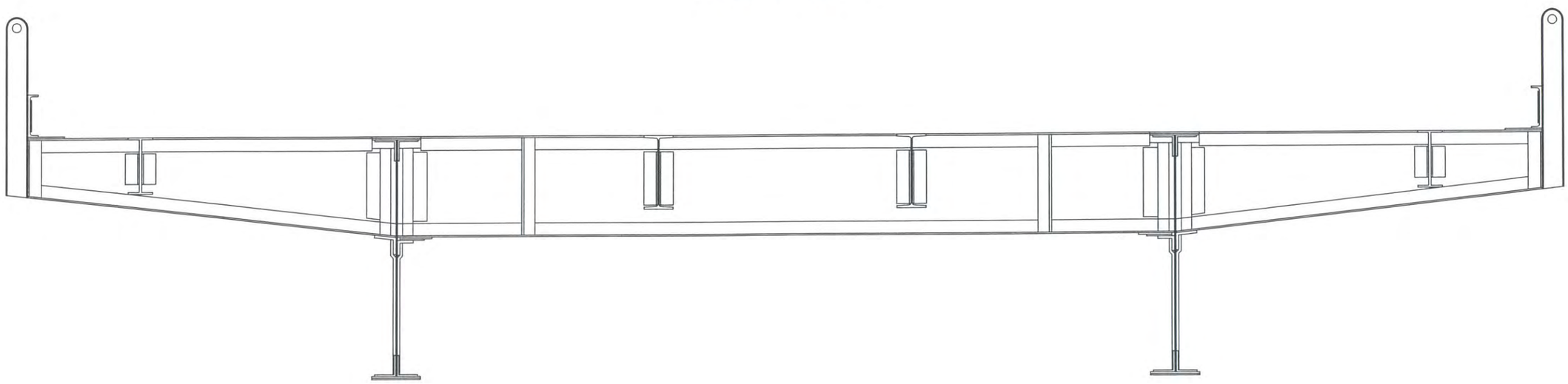

SOUTH ELEVATION
(LOOKING NORTH)

Hoyle, Tanner Associates, Inc.
Consulting Engineers
150 Dow Street.
Manchester, NH 03101-1227
Tel 603-669-5555, Fax 603-669-4168
Web Page: www.hoyletanner.com
© Copyright 2009

SARAH LONG BRIDGE
SPAN 2 FLOOR BEAM 1

INSPECTED BY: JB	DATE: 5-29-2009	SCALE: 3/8" = 1'-0"
& EGW	6-5-2009	

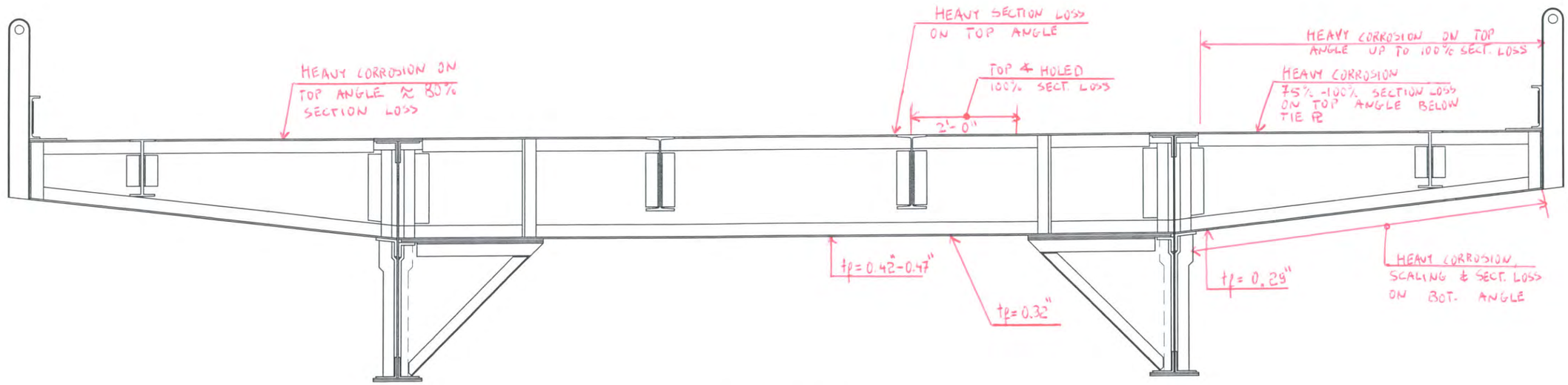

NORTH ELEVATION
(LOOKING SOUTH)

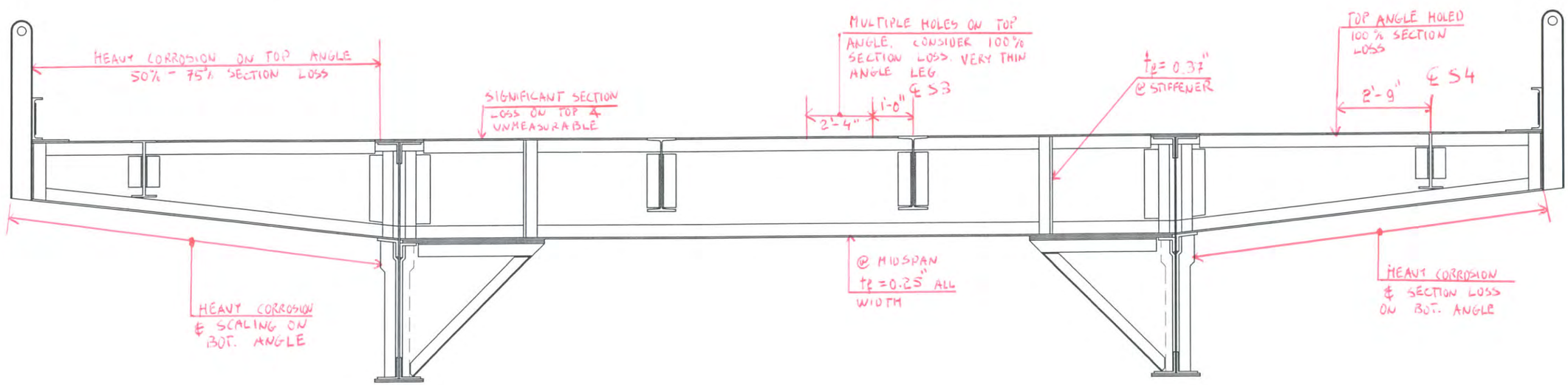

SOUTH ELEVATION
(LOOKING NORTH)

Hoyle, Tanner & Associates, Inc.
Consulting Engineers
150 Dow Street.
Manchester, NH 03101-1227
Tel 603-669-5555, Fax 603-669-4168
Web Page: www.hoyletanner.com
© Copyright 2009

SARAH LONG BRIDGE
SPAN 2 FLOOR BEAM 3

INSPECTED BY: JB	DATE: 5-29-2009	SCALE: ⅜" = 1'-0"
& EGW	6-5-2009	

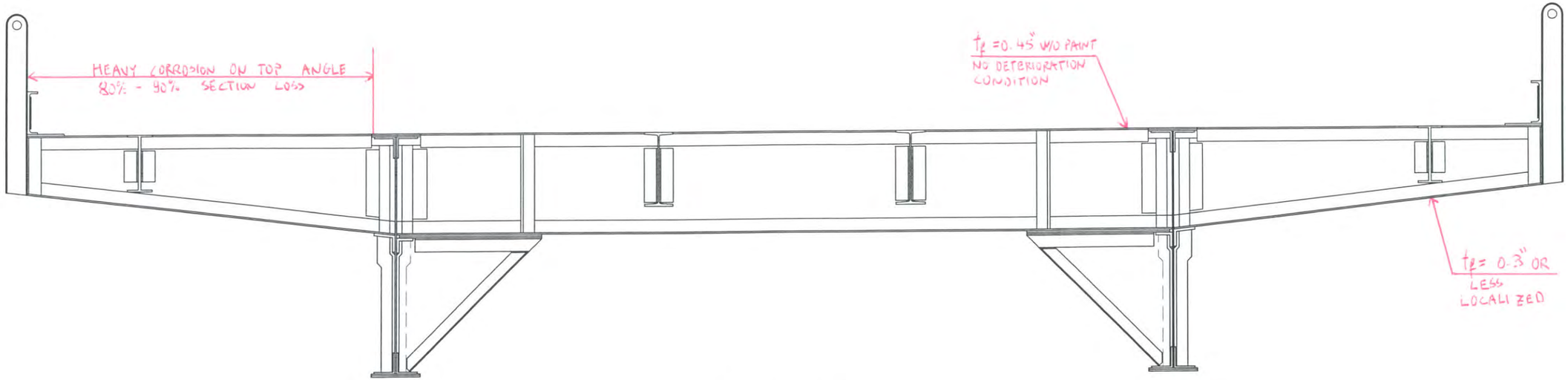

NORTH ELEVATION
(LOOKING SOUTH)

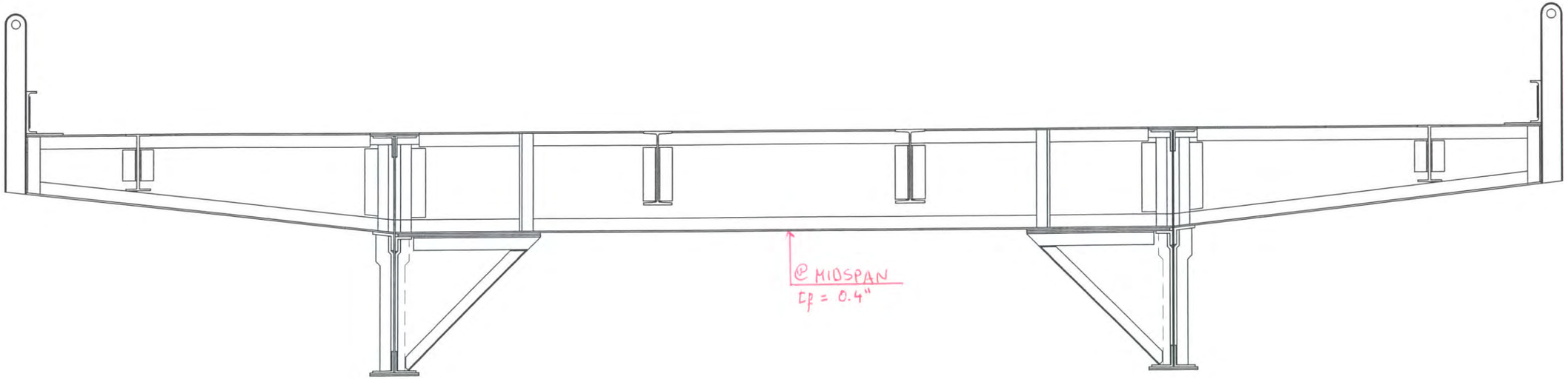

SOUTH ELEVATION
(LOOKING NORTH)

Hoyle, Tanner Associates, Inc.
Consulting Engineers

150 Dow Street.
Manchester, NH 03101–1227
Tel 603–669–5555, Fax 603–669–4168
Web Page: www.hoyletanner.com
© Copyright 2009

SARAH LONG BRIDGE
SPAN 3 FLOOR BEAM 0

INSPECTED BY: JB & EGW	DATE: 5-29-2009 6-5-2009	SCALE: ⅜" = 1'–0"

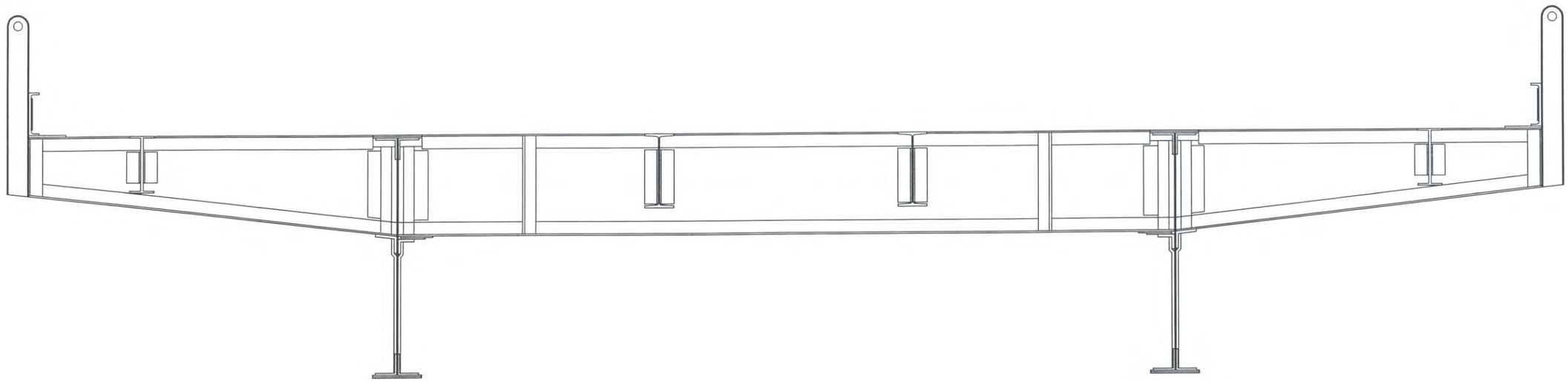

NORTH ELEVATION
(LOOKING SOUTH)

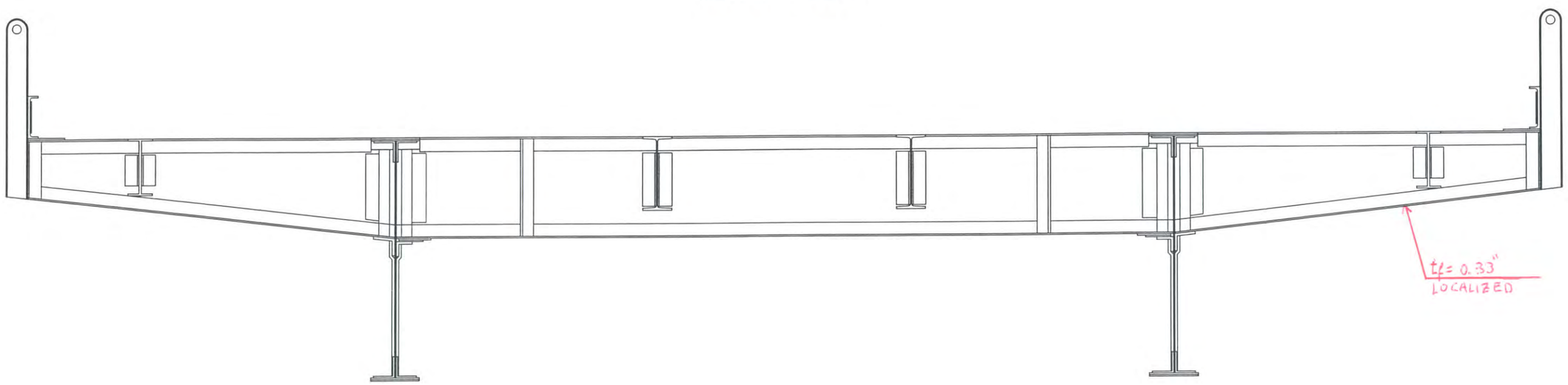

SOUTH ELEVATION
(LOOKING NORTH)

Hoyle, Tanner Associates, Inc.
Consulting Engineers

150 Dow Street.
Manchester, NH 03101-1227
Tel 603-669-5555, Fax 603-669-4168
Web Page: www.hoyletanner.com
© Copyright 2009

SARAH LONG BRIDGE
SPAN 3 FLOOR BEAM 2

INSPECTED BY: JB	DATE: 6-5-2009	SCALE: 3/8" = 1'-0"
#EGW		

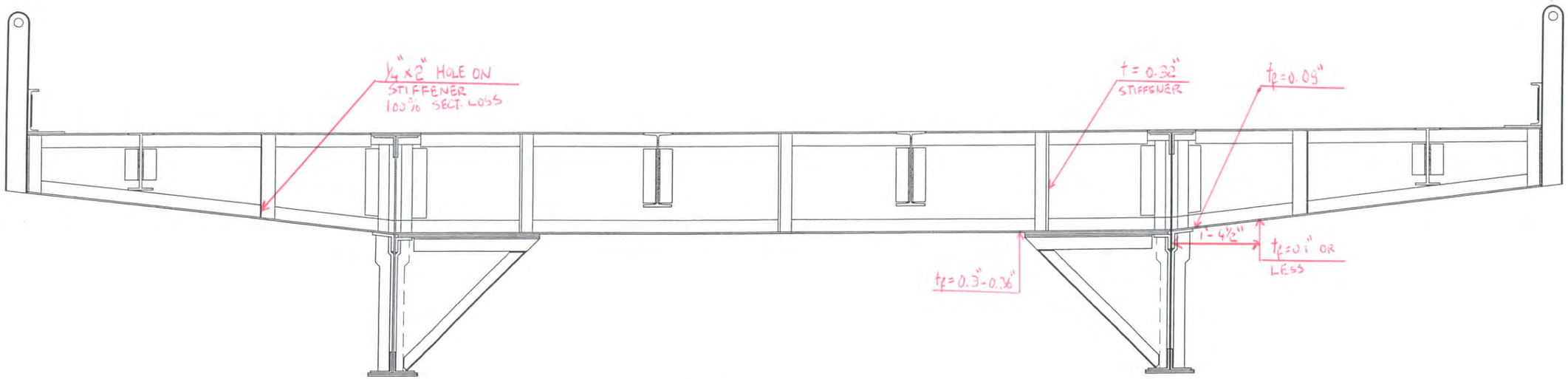

NORTH ELEVATION
(LOOKING SOUTH)

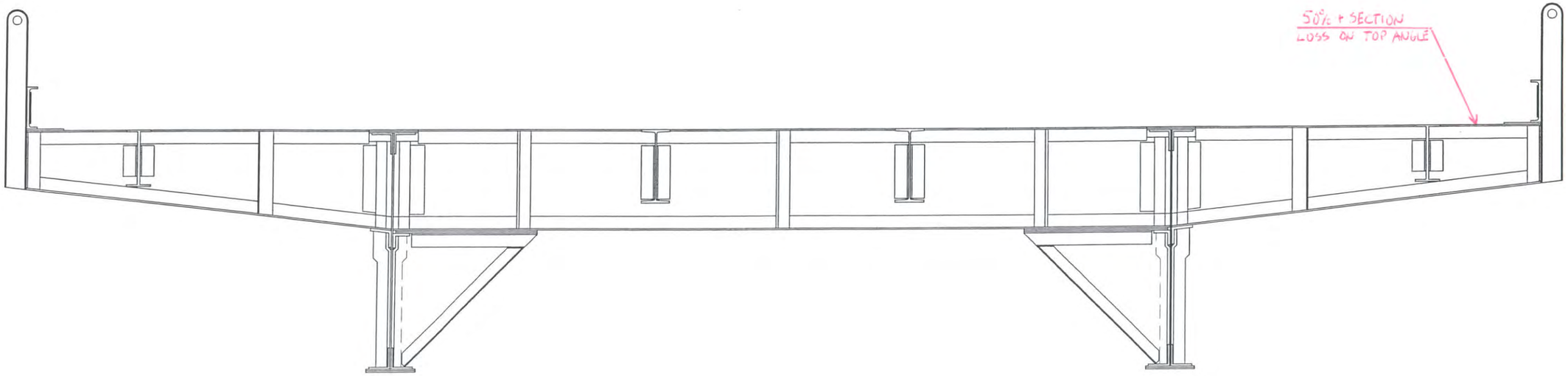

SOUTH ELEVATION
(LOOKING NORTH)

Hoyle, Tanner & Associates, Inc.
Consulting Engineers

150 Dow Street,
Manchester, NH 03101-1227
Tel 603-669-5555, Fax 603-669-4168
Web Page: www.hoyletanner.com
© Copyright 2009

SARAH LONG BRIDGE
SPAN 3 FLOOR BEAM 3

INSPECTED BY: JB	DATE: 5-24-2009	SCALE: 3/8" = 1'-0"
# EGW	6-5-2009	

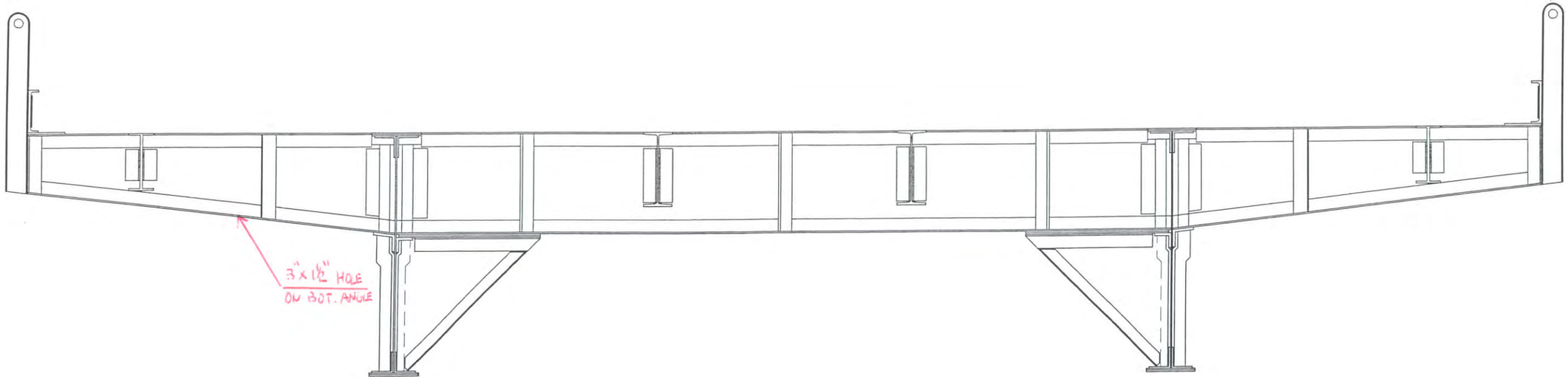

NORTH ELEVATION
(LOOKING SOUTH)

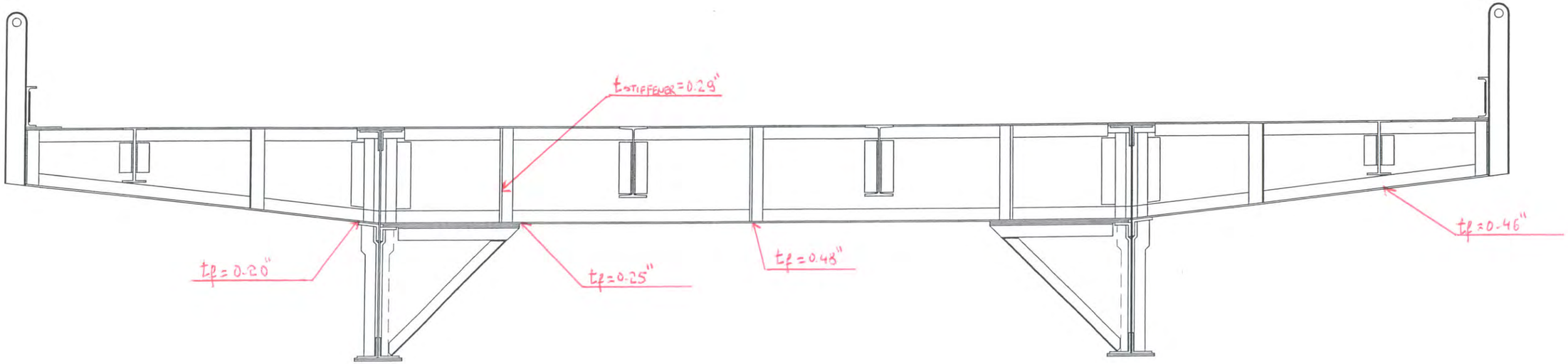

SOUTH ELEVATION
(LOOKING NORTH)

Hoyle, Tanner Associates, Inc.
Consulting Engineers

150 Dow Street
Manchester, NH 03101-1227
Tel 603-669-5555, Fax 603-669-4168
Web Page: www.hoyletanner.com
© Copyright 2009

SARAH LONG BRIDGE
SPAN 4 FLOOR BEAM 0

INSPECTED BY: JEB & EGW	DATE: 5-29-2009 6-5-2009	SCALE: ⅛" = 1'-0"

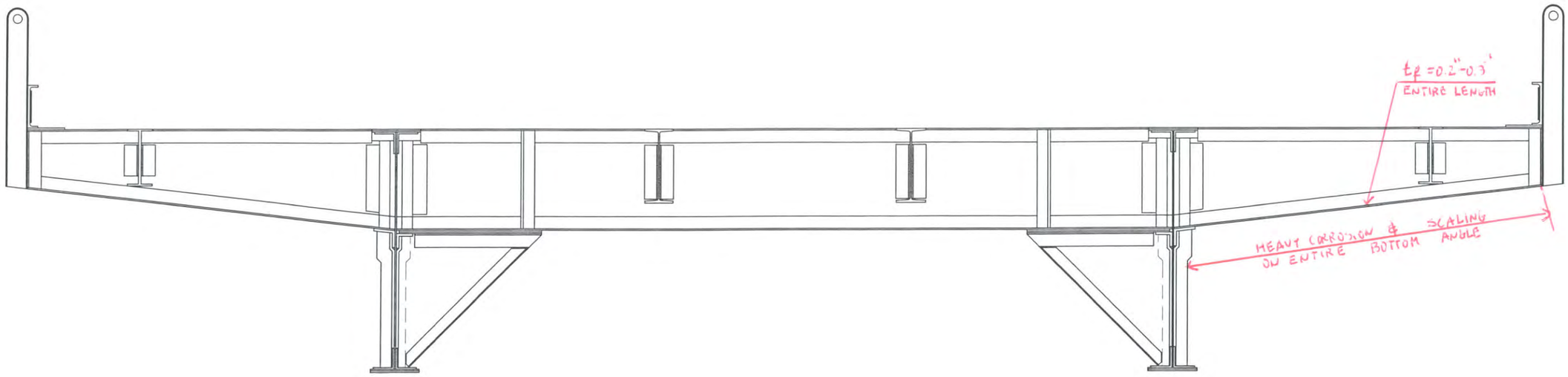

NORTH ELEVATION
(LOOKING SOUTH)

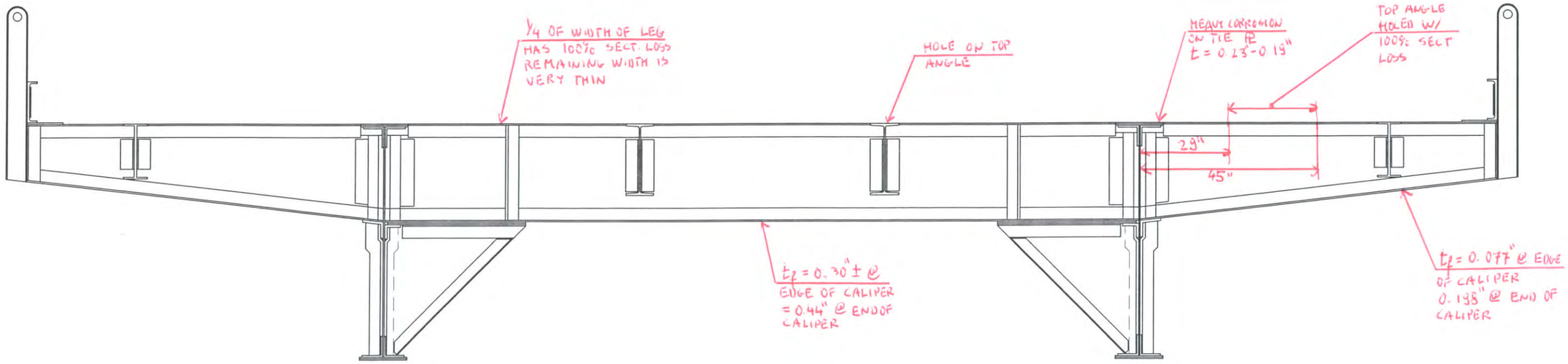

SOUTH ELEVATION
(LOOKING NORTH)

Hoyle, Tanner Associates, Inc.
Consulting Engineers
150 Dow Street
Manchester, NH 03101-1227
Tel 603-669-5555, Fax 603-669-4168
Web Page: www.hoyletanner.com
© Copyright 2009

SARAH LONG BRIDGE
SPAN 4 FLOOR BEAM 3

INSPECTED BY: JB	DATE: 5-29-2009	SCALE: 3/8" = 1'-0"
JEGW	6-5-2009	

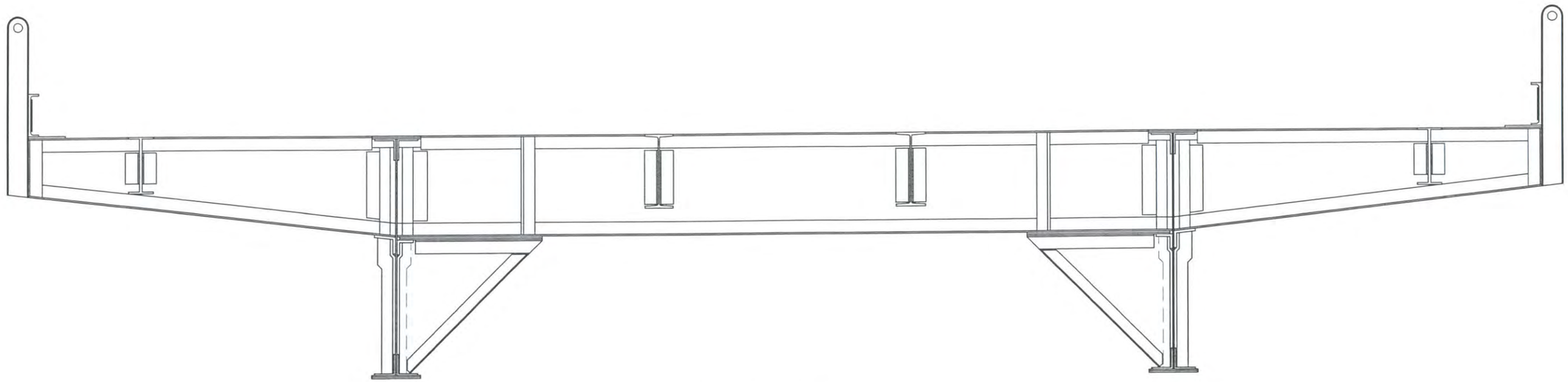

NORTH ELEVATION
(LOOKING SOUTH)

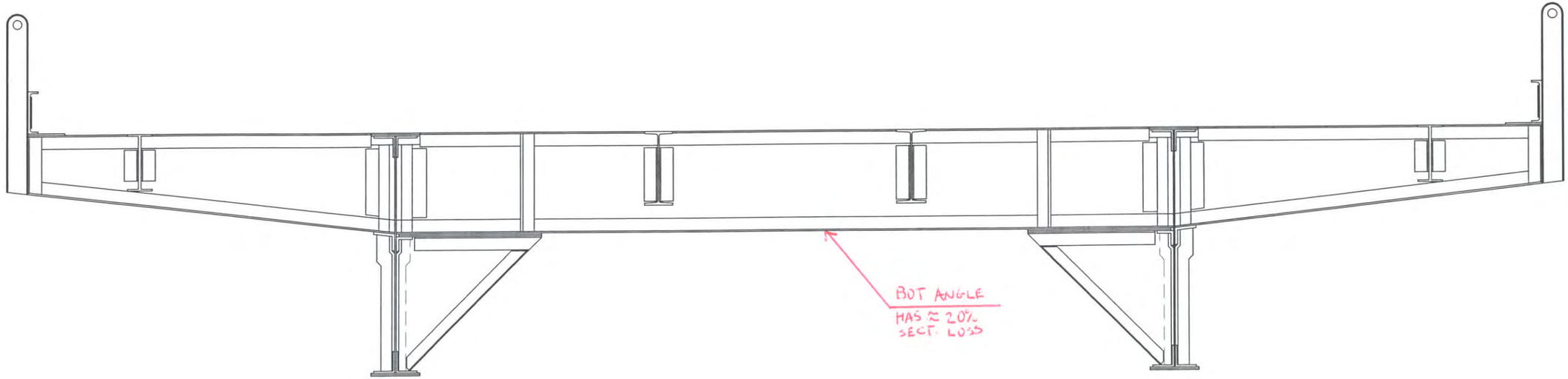

SOUTH ELEVATION
(LOOKING NORTH)

Hoyle, Tanner & Associates, Inc.
Consulting Engineers

150 Dow Street.
Manchester, NH 03101-1227
Tel 603-669-5555, Fax 603-669-4168
Web Page: www.hoyletanner.com
© Copyright 2009

SARAH LONG BRIDGE
SPAN 5 FLOOR BEAM 0

INSPECTED BY: JB & EGW	DATE: 5-29-2003 6-5-2003	SCALE: 3/8" = 1'-0"

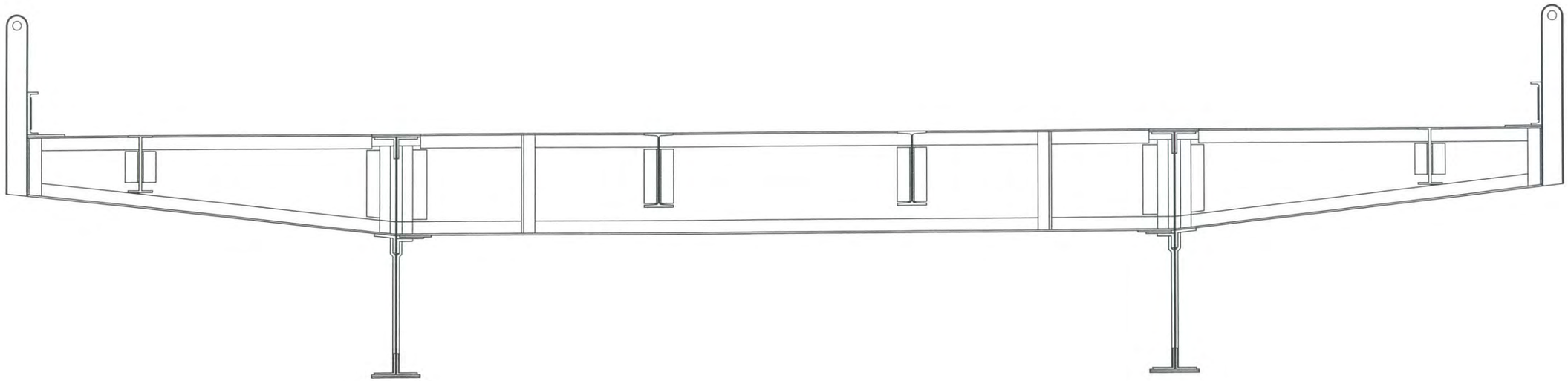

NORTH ELEVATION
(LOOKING SOUTH)

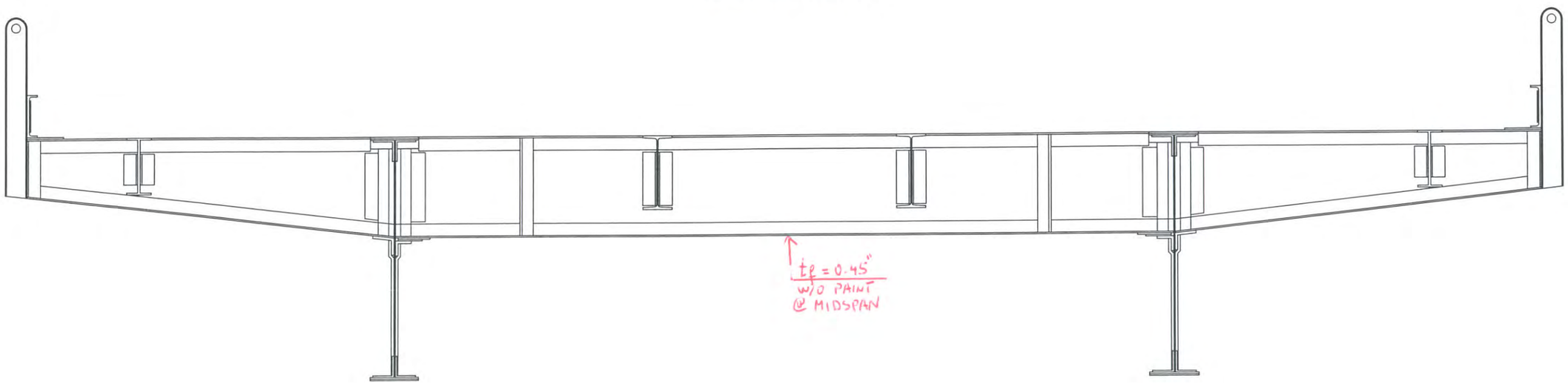

SOUTH ELEVATION
(LOOKING NORTH)

Hoyle, Tanner Associates, Inc.
Consulting Engineers
150 Dow Street.
Manchester, NH 03101-1227
Tel 603-669-5555, Fax 603-669-4168
Web Page: www.hoyletanner.com
© Copyright 2009

SARAH LONG BRIDGE
SPAN 5 FLOOR BEAM 2

INSPECTED BY: JB	DATE: 5-29-2009	SCALE: 3/8" = 1'-0"
& EGW	6-5-2009	

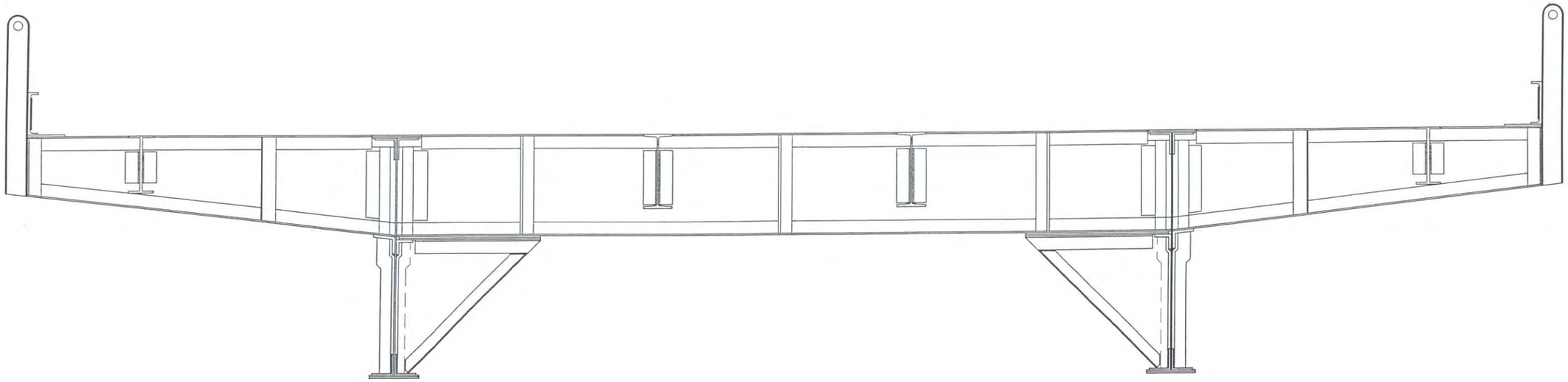

SOUTH ELEVATION
(LOOKING NORTH)

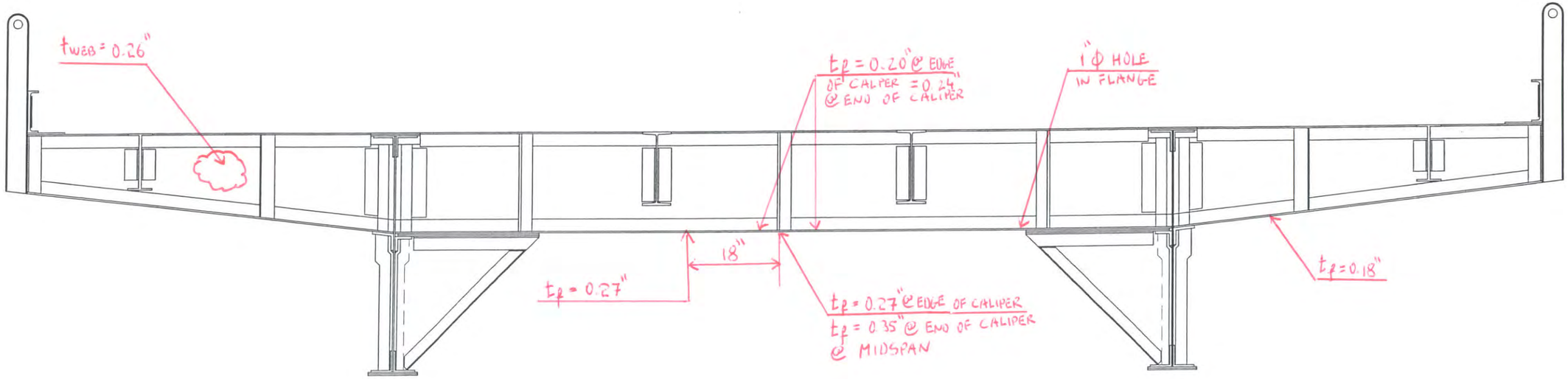

NORTH ELEVATION
(LOOKING SOUTH)

Hoyle, Tanner & Associates, Inc.
Consulting Engineers
150 Dow Street.
Manchester, NH 03101-1227
Tel 603-669-5555, Fax 603-669-4168
Web Page: www.hoyletanner.com

© Copyright 2009

SARAH LONG BRIDGE
SPAN 5 FLOOR BEAM 3

INSPECTED BY: JB & EGW	DATE: 5-29-2009 6-5-2009	SCALE: 3/8" = 1'-0"

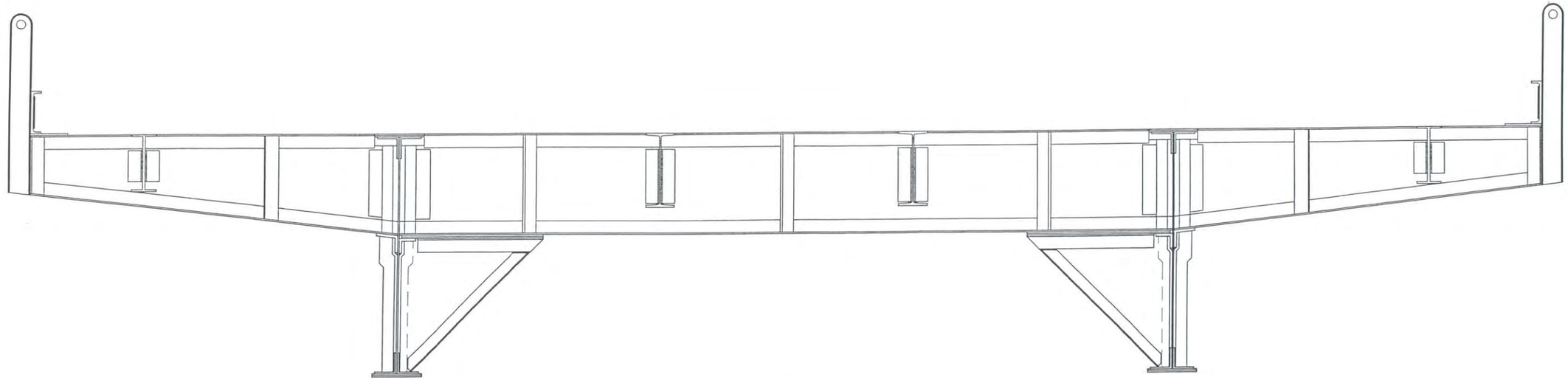

NORTH ELEVATION
(LOOKING SOUTH)

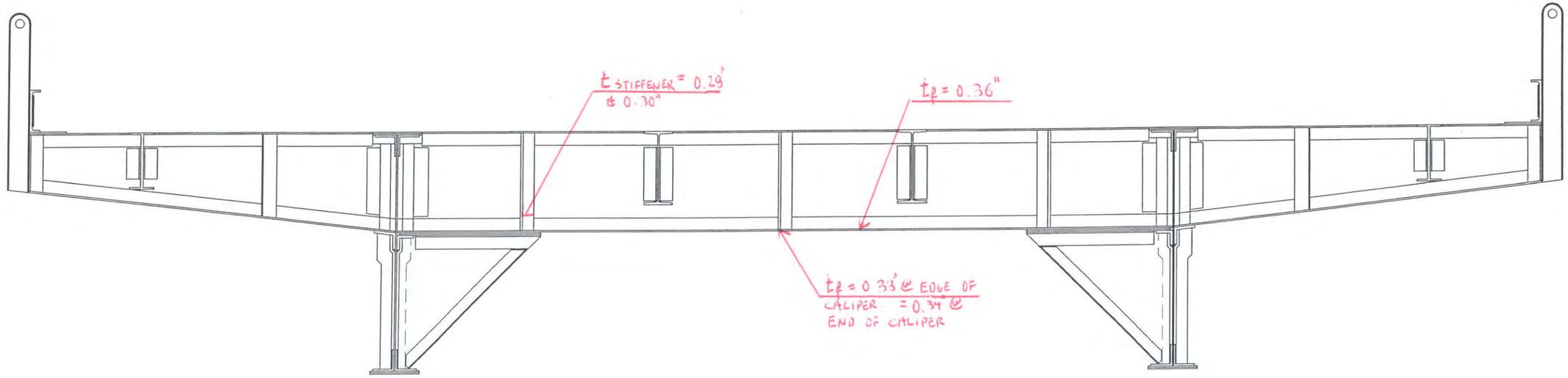

SOUTH ELEVATION
(LOOKING NORTH)

Hoyle, Tanner Associates, Inc.
Consulting Engineers

150 Dow Street.
Manchester, NH 03101-1227
Tel 603-669-5555, Fax 603-669-4168
Web Page: www.hoyletanner.com
© Copyright 2009

SARAH LONG BRIDGE
SPAN 6 FLOOR BEAM 0

INSPECTED BY: JB & EGW	DATE:	SCALE: 3/8" = 1'-0"

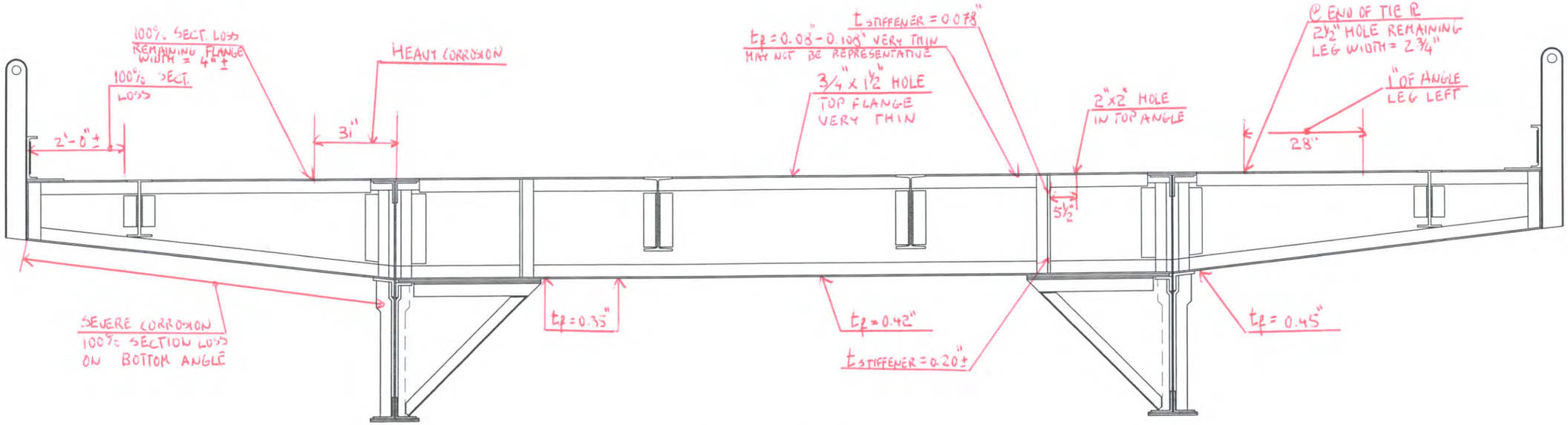

NORTH ELEVATION
(LOOKING SOUTH)

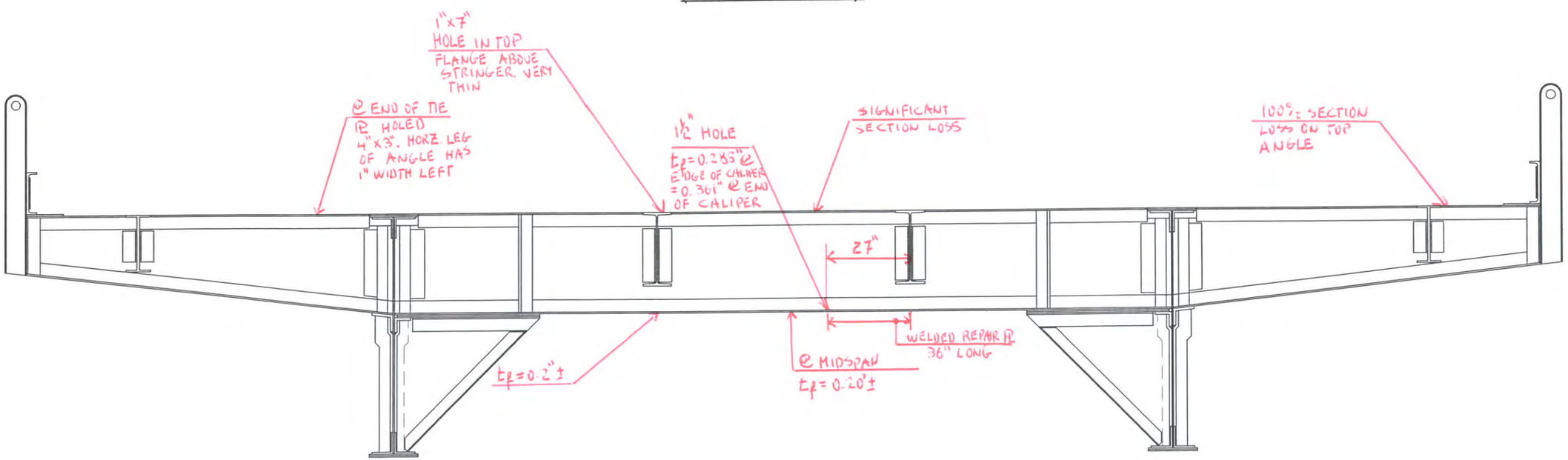

SOUTH ELEVATION
(LOOKING NORTH)

Hoyle, Tanner & Associates, Inc.
Consulting Engineers
150 Dow Street.
Manchester, NH 03101-1227
Tel 603-669-5555, Fax 603-669-4168
Web Page: www.hoyletanner.com
© Copyright 2009

SARAH LONG BRIDGE
SPAN 6 FLOOR BEAM 3

INSPECTED BY: JB & EGW	DATE:	SCALE: 3/8" = 1'-0"

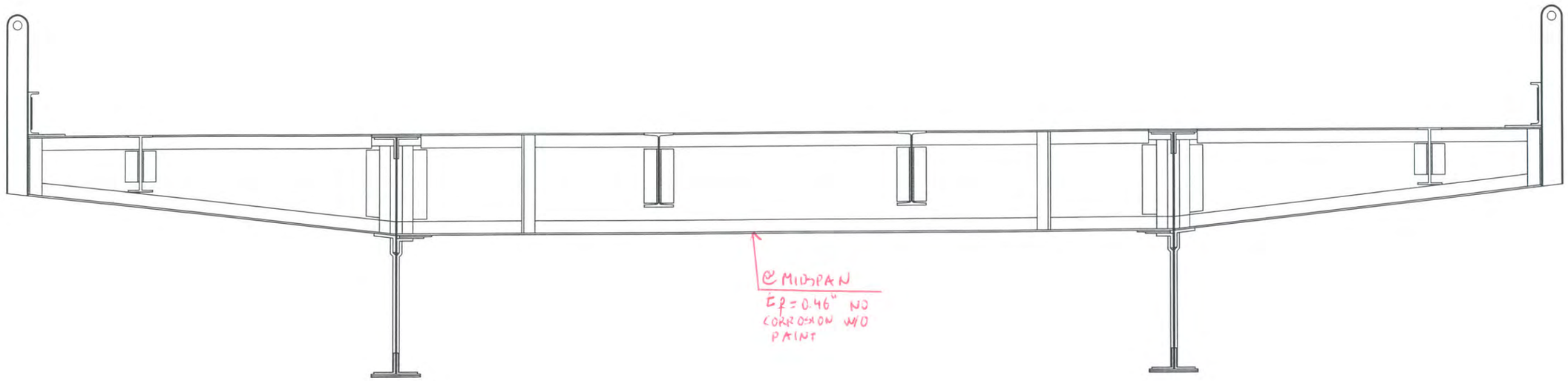

NORTH ELEVATION
(LOOKING SOUTH)

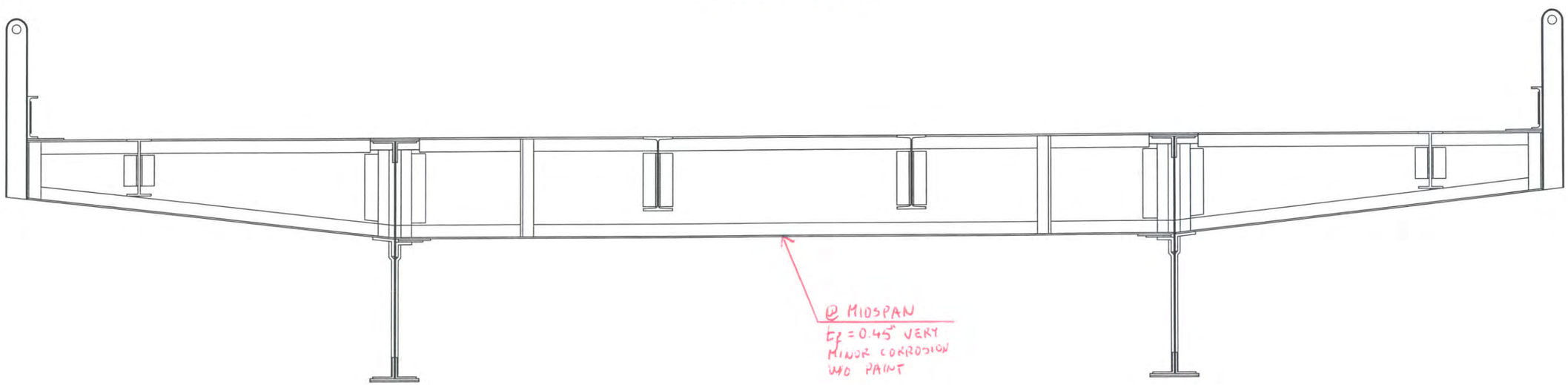

SOUTH ELEVATION
(LOOKING NORTH)

Hoyle, Tanner Associates, Inc.
Consulting Engineers
150 Dow Street.
Manchester, NH 03101-1227
Tel 603-669-5555, Fax 603-669-4168
Web Page: www.hoyletanner.com
© Copyright 2009

SARAH LONG BRIDGE
SPAN 7 FLOOR BEAM 2

INSPECTED BY: JB	DATE:	SCALE: 3/8" = 1'-0"
& EGW		

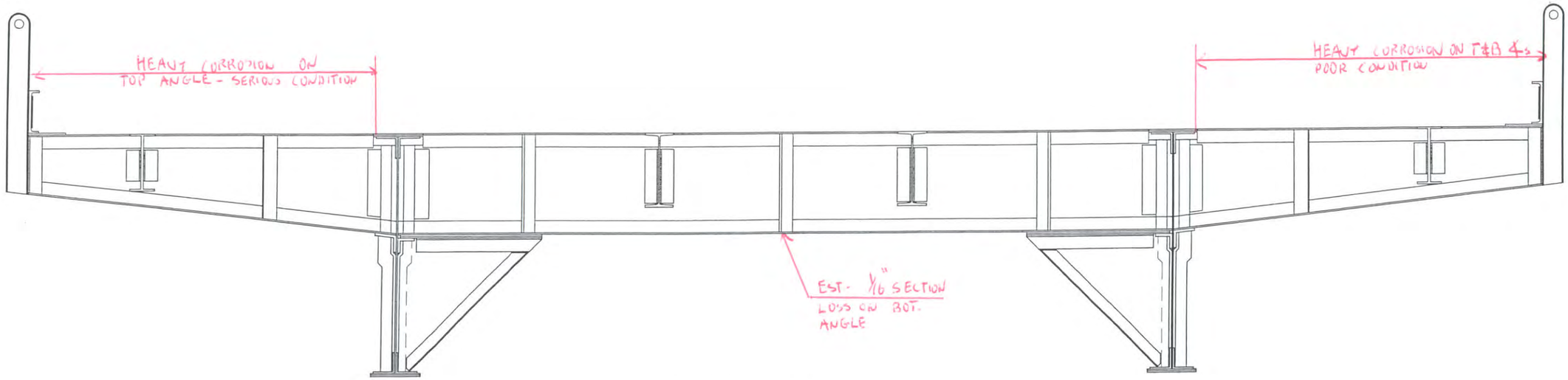

NORTH ELEVATION
(LOOKING SOUTH)

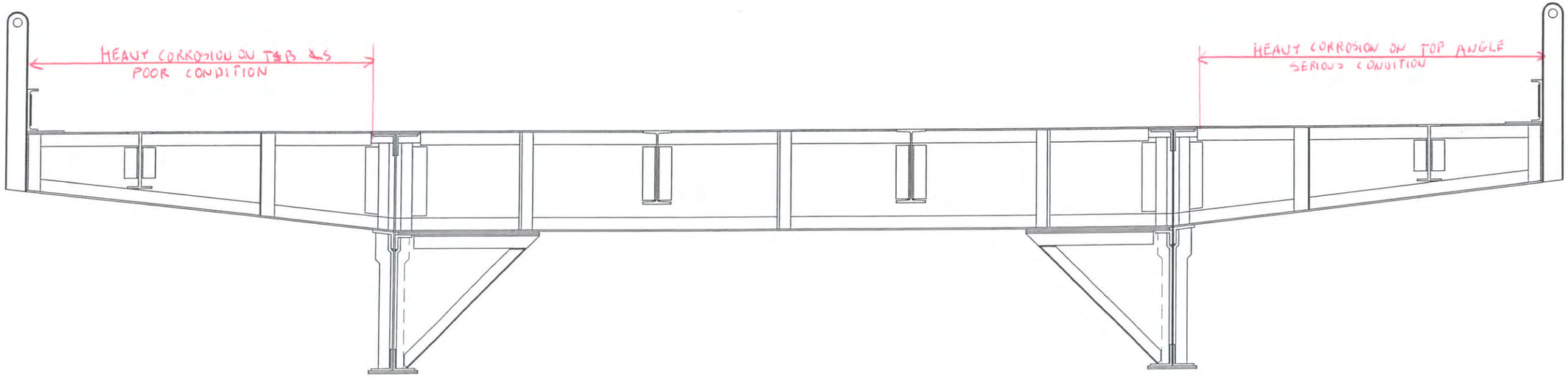

SOUTH ELEVATION
(LOOKING NORTH)

Hoyle, Tanner & Associates, Inc.
Consulting Engineers
150 Dow Street
Manchester, NH 03101-1227
Tel 603-669-5555, Fax 603-669-4168
Web Page: www.hoyletanner.com
© Copyright 2009

SARAH LONG BRIDGE
SPAN 7 FLOOR BEAM 3

INSPECTED BY: JB & EGW	DATE: 6-1-2009 6-2-2009	SCALE: 3/8" = 1'-0"

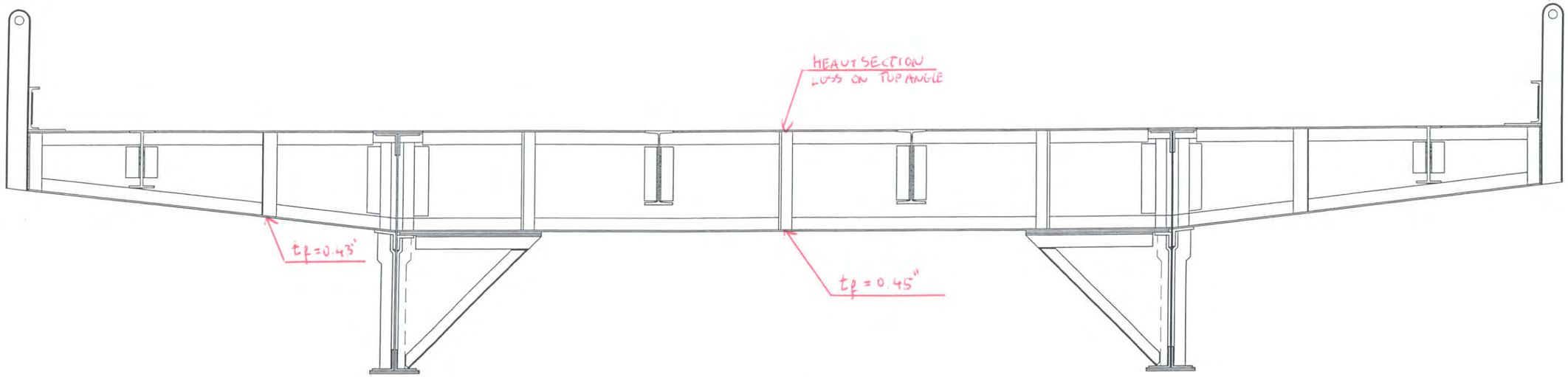

NORTH ELEVATION
(LOOKING SOUTH)

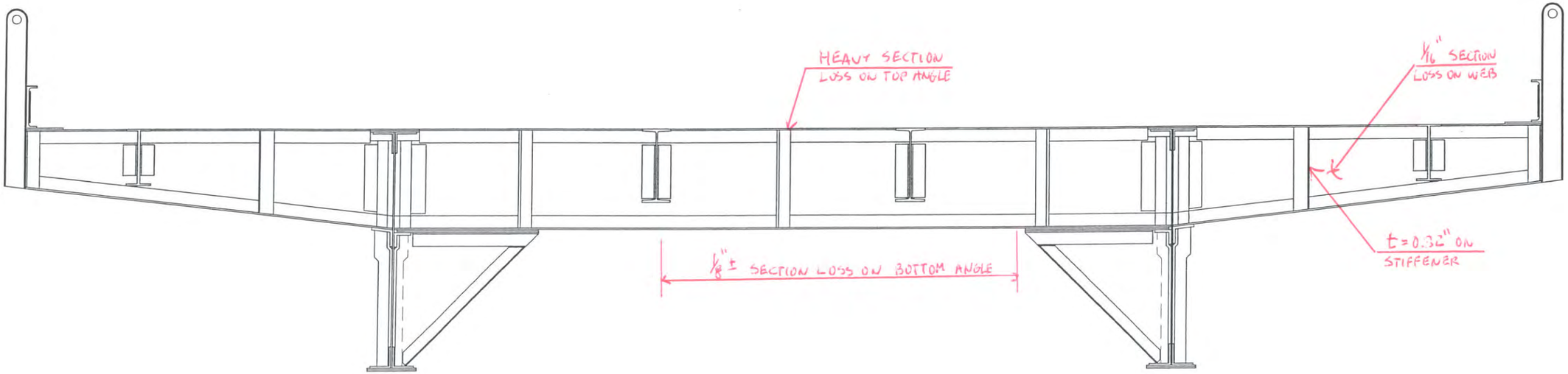

SOUTH ELEVATION
(LOOKING NORTH)

Hoyle, Tanner Associates, Inc.
Consulting Engineers
150 Dow Street.
Manchester, NH 03101-1227
Tel 603-669-5555, Fax 603-669-4168
Web Page: www.hoyletanner.com
© Copyright 2009

SARAH LONG BRIDGE
SPAN 8 FLOOR BEAM 0

INSPECTED BY: JB	DATE: 6-2-2004	SCALE: 1/8" = 1'-0"
BEGW	6-3-2004, 6-1-2004	

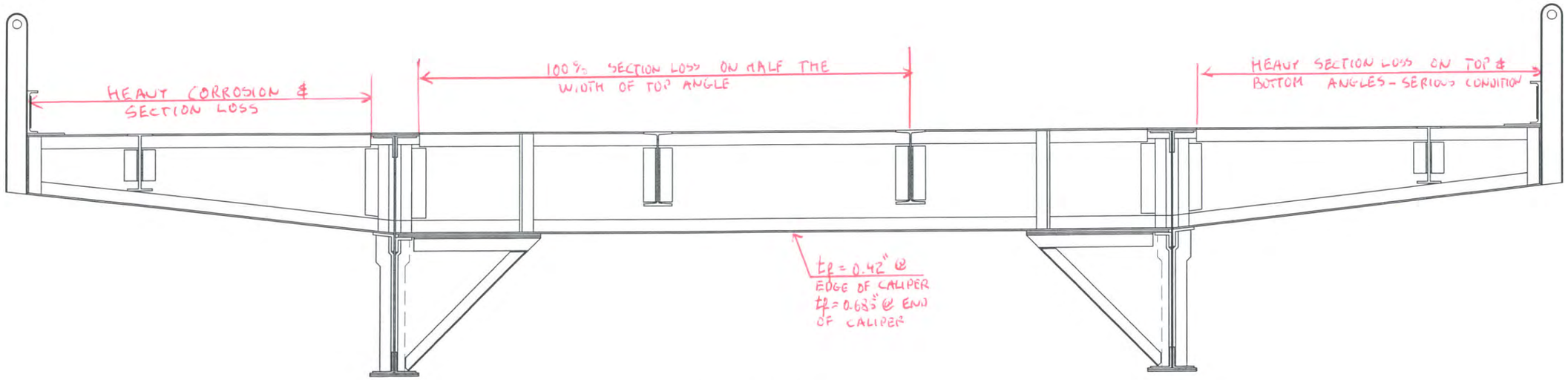

NORTH ELEVATION
(LOOKING SOUTH)

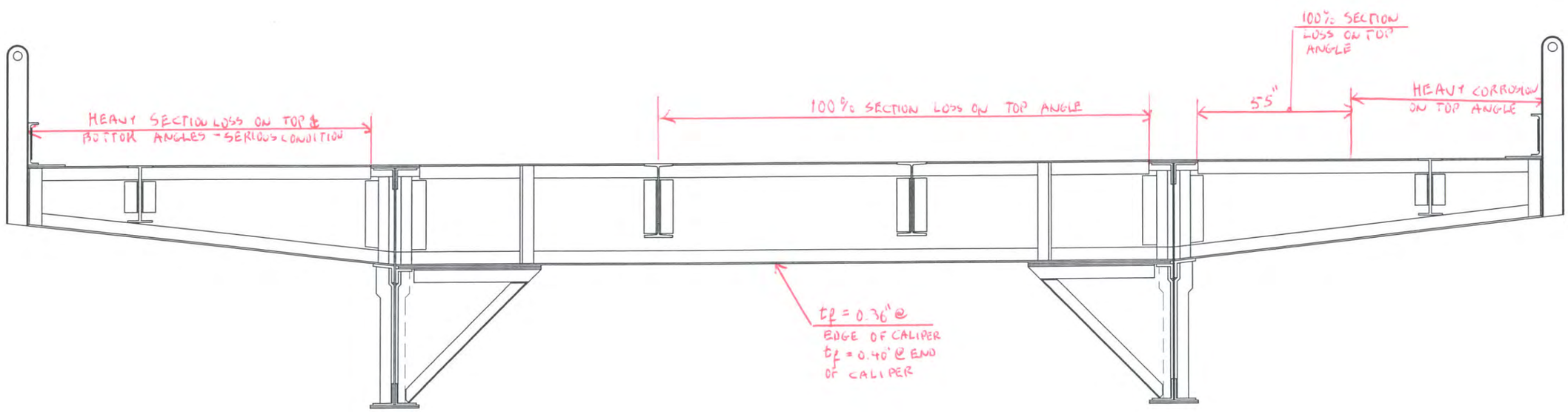

SOUTH ELEVATION
(LOOKING NORTH)

Hoyle, Tanner Associates, Inc.
Consulting Engineers

150 Dow Street.
Manchester, NH 03101-1227
Tel 603-669-5555, Fax 603-669-4168
Web Page: www.hoyletanner.com
© Copyright 2009

SARAH LONG BRIDGE
SPAN 8 FLOOR BEAM 3

INSPECTED BY: JB	DATE: 6-2-2009	SCALE: 3/8" = 1'-0"
& EGW	6-3-2009	

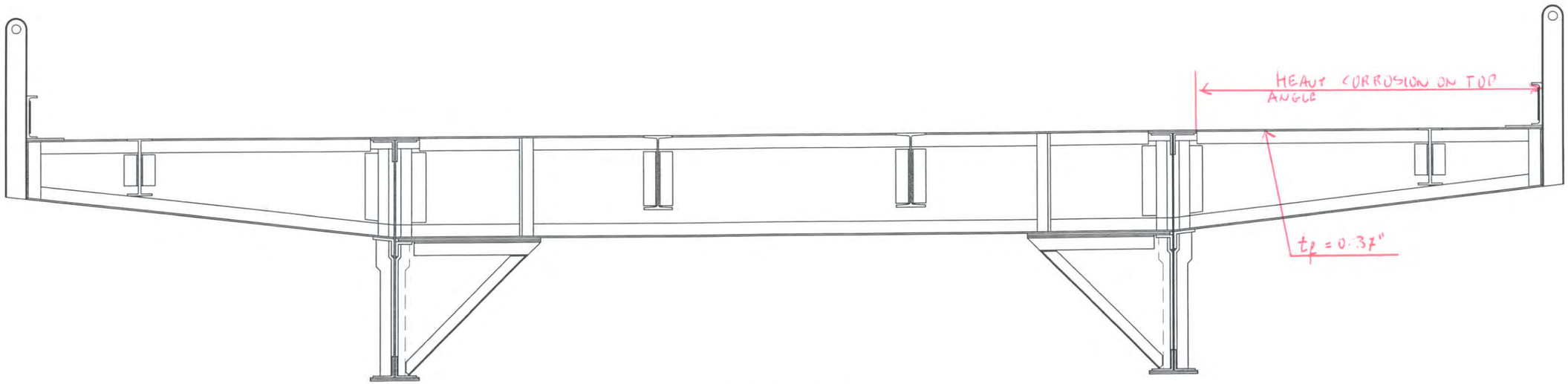

NORTH ELEVATION
(LOOKING SOUTH)

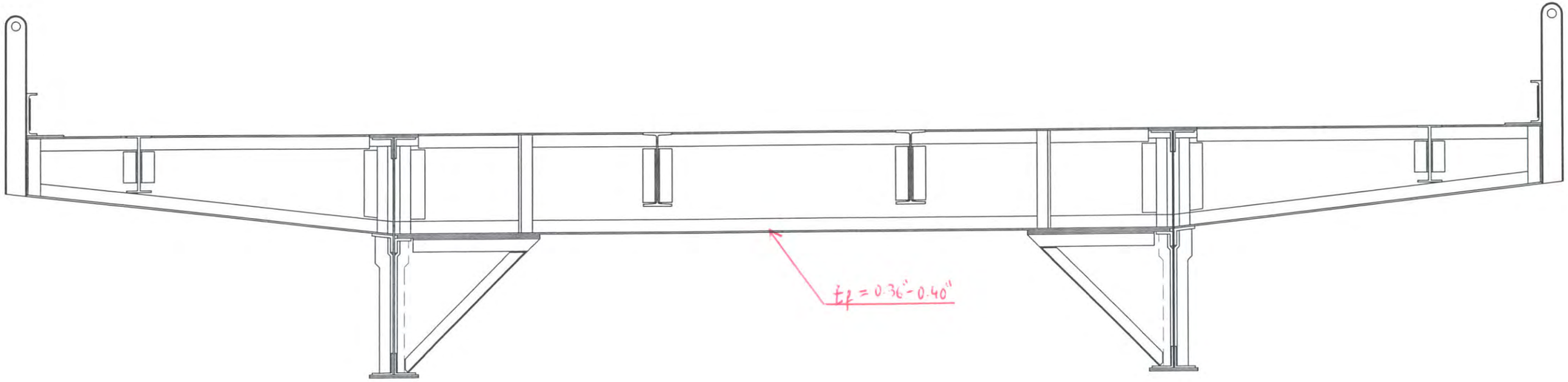

SOUTH ELEVATION
(LOOKING NORTH)

Hoyle, Tanner Associates, Inc.
Consulting Engineers

150 Dow Street.
Manchester, NH 03101-1227
Tel 603-669-5555, Fax 603-669-4168
Web Page: www.hoyletanner.com
© Copyright 2009

SARAH LONG BRIDGE
SPAN 9 FLOOR BEAM 0

INSPECTED BY: JB	DATE: 6-3-2009	SCALE: 3/8" = 1'-0"
& EGW	6-2-2009	

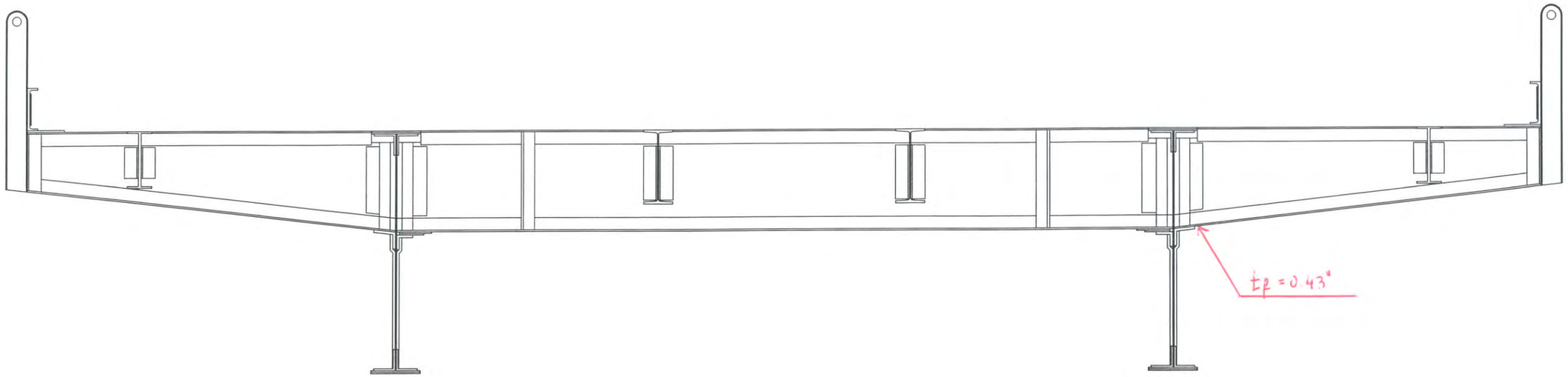

NORTH ELEVATION
(LOOKING SOUTH)

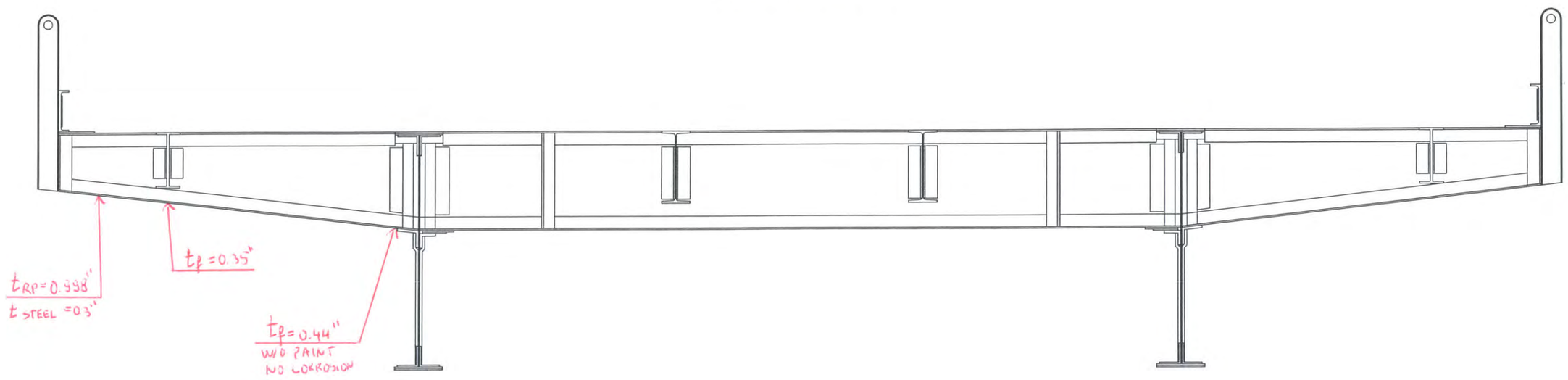

SOUTH ELEVATION
(LOOKING NORTH)

Hoyle, Tanner Associates, Inc.
Consulting Engineers
150 Dow Street.
Manchester, NH 03101-1227
Tel 603-669-5555, Fax 603-669-4168
Web Page: www.hoyletanner.com
© Copyright 2009

SARAH LONG BRIDGE
SPAN 9 FLOOR BEAM 2

INSPECTED BY: JB	DATE: 6-2-2009	SCALE: 3/8" = 1'-0"
& EGW	6-3-2009	

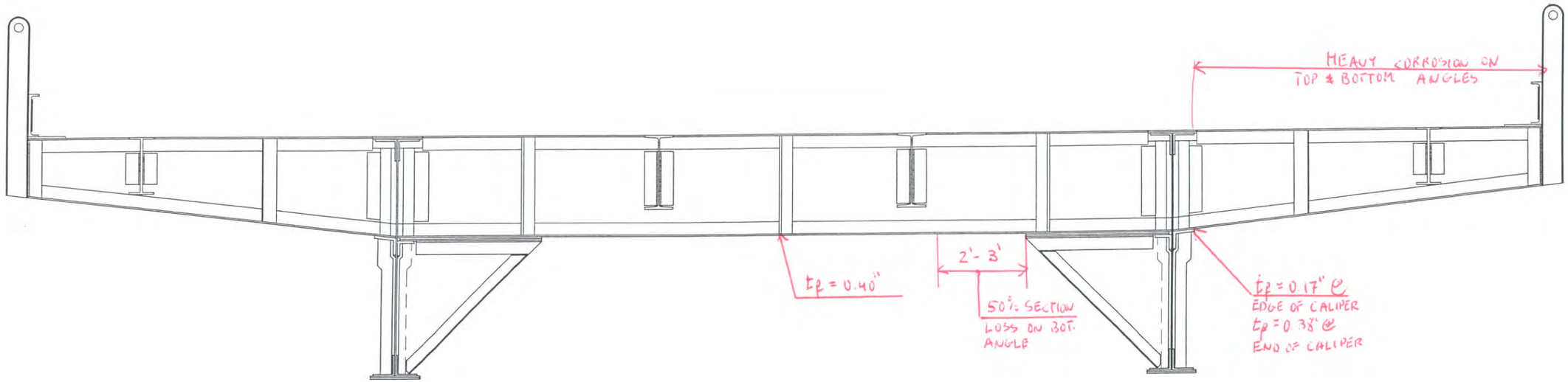

NORTH ELEVATION
(LOOKING SOUTH)

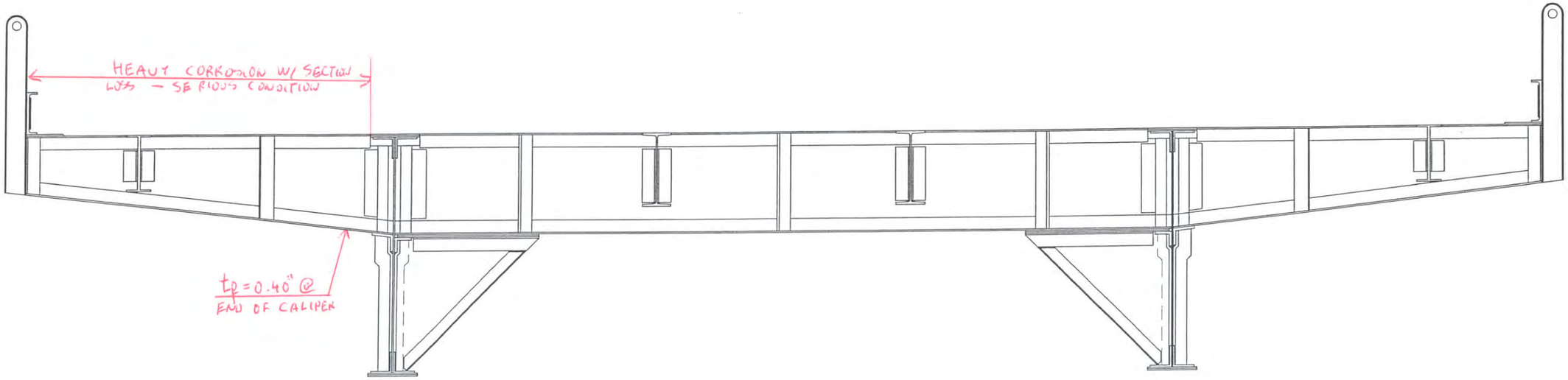

SOUTH ELEVATION
(LOOKING NORTH)

Hoyle, Tanner & Associates, Inc.
Consulting Engineers

150 Dow Street
Manchester, NH 03101-1227
Tel 603-669-5555, Fax 603-669-4168
Web Page: www.hoyletanner.com
© Copyright 2009

SARAH LONG BRIDGE
SPAN 9 FLOOR BEAM 3

INSPECTED BY: JB & EGW	DATE: 6-3-2009 6-1-2009	SCALE: 3/8" = 1'-0"

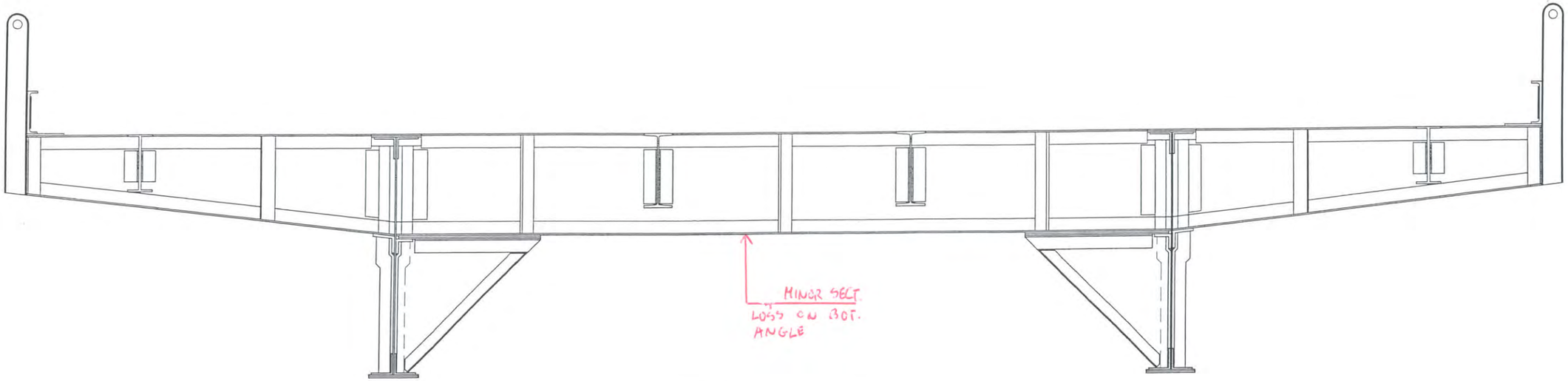

NORTH ELEVATION
(LOOKING SOUTH)

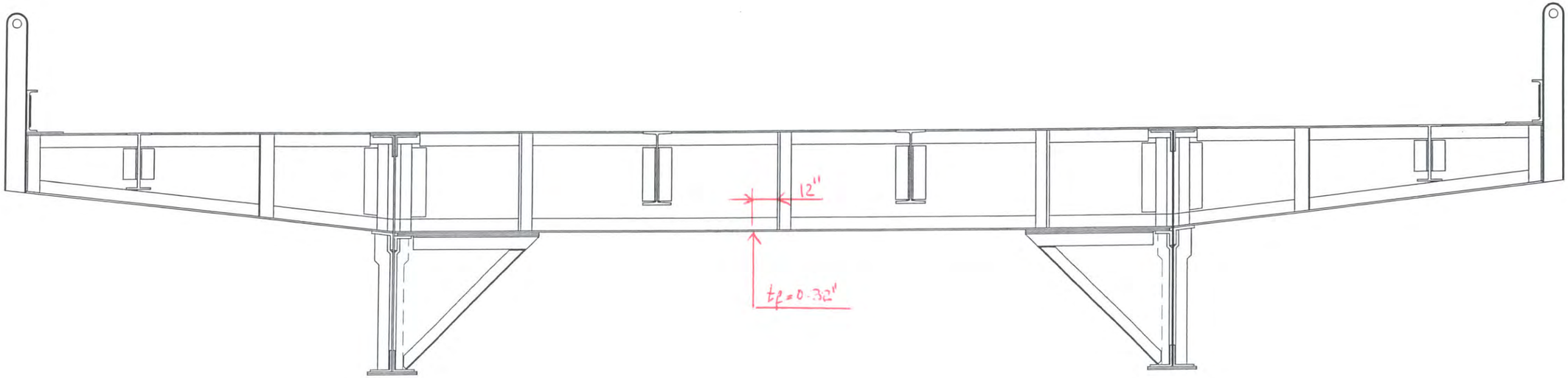

SOUTH ELEVATION
(LOOKING NORTH)

Hoyle, Tanner & Associates, Inc.
Consulting Engineers
150 Dow Street.
Manchester, NH 03101-1227
Tel 603-669-5555, Fax 603-669-4168
Web Page: www.hoyletanner.com
© Copyright 2009

SARAH LONG BRIDGE
SPAN 10 FLOOR BEAM 0

INSPECTED BY: JB & EGW	DATE: 6-3-2004 6-1-2004	SCALE: 3/8" = 1'-0"

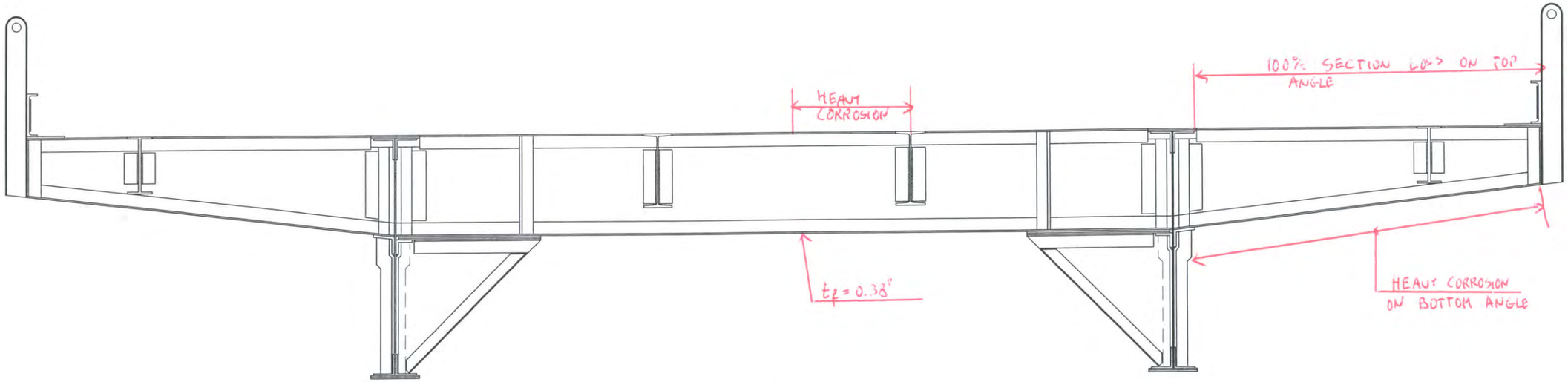

NORTH ELEVATION
(LOOKING SOUTH)

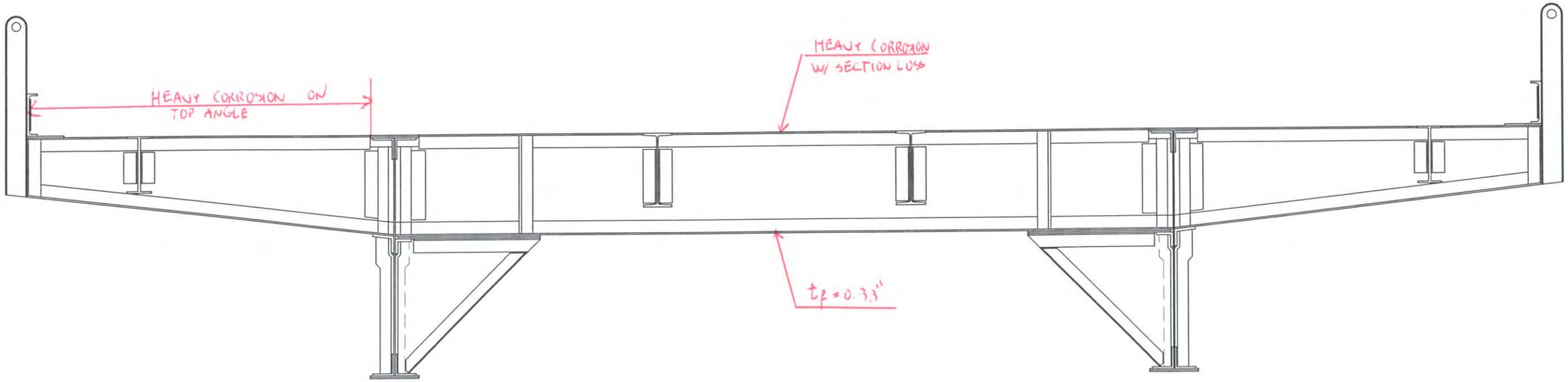

SOUTH ELEVATION
(LOOKING NORTH)

Hoyle, Tanner Associates, Inc.
Consulting Engineers

150 Dow Street.
Manchester, NH 03101–1227
Tel 603–669–5555, Fax 603–669–4168
Web Page: www.hoyletanner.com
© Copyright 2009

SARAH LONG BRIDGE
SPAN 10 FLOOR BEAM 3

INSPECTED BY: JB & EGW	DATE: 6-1-2009 6-3-2009	SCALE: ⅜" = 1'–0"

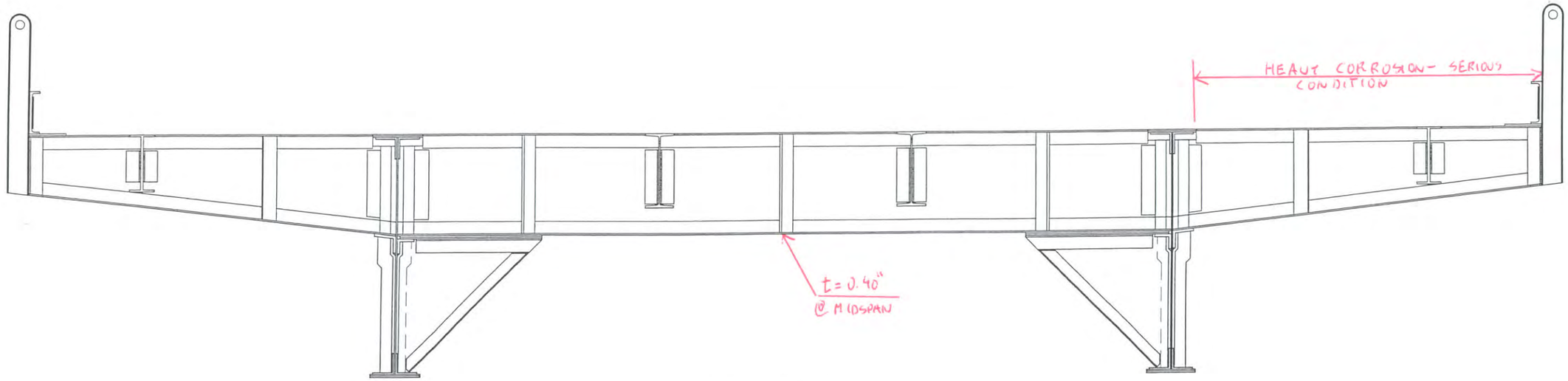

NORTH ELEVATION
(LOOKING SOUTH)

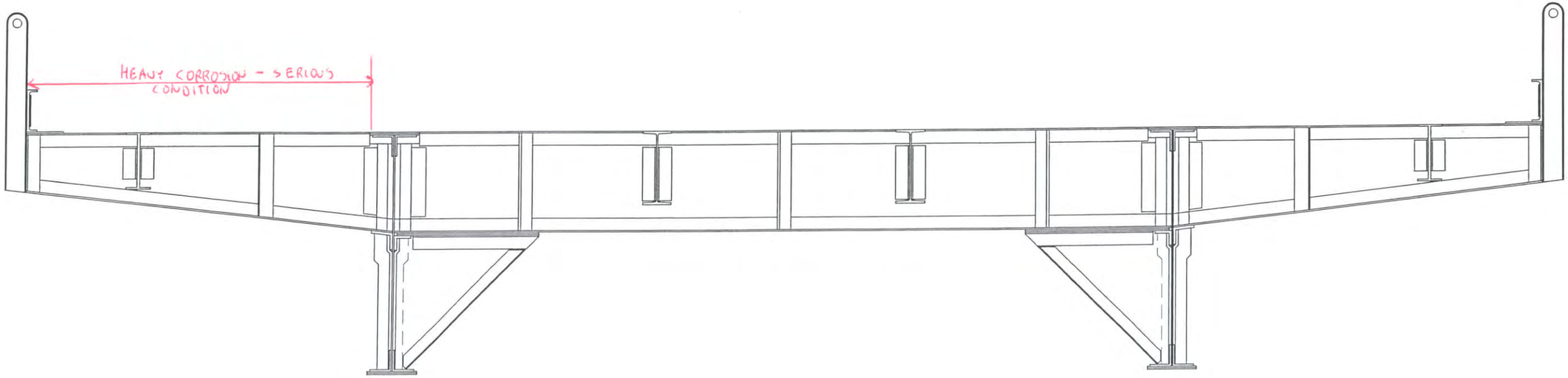

SOUTH ELEVATION
(LOOKING NORTH)

Hoyle, Tanner & Associates, Inc.
Consulting Engineers

150 Dow Street,
Manchester, NH 03101-1227
Tel 603-669-5555, Fax 603-669-4168
Web Page: www.hoyletanner.com
© Copyright 2009

SARAH LONG BRIDGE
SPAN 11 FLOOR BEAM 3

INSPECTED BY: JB & EGW	DATE: 6-1-2009 6-3-2009	SCALE: 3/8" = 1'-0"

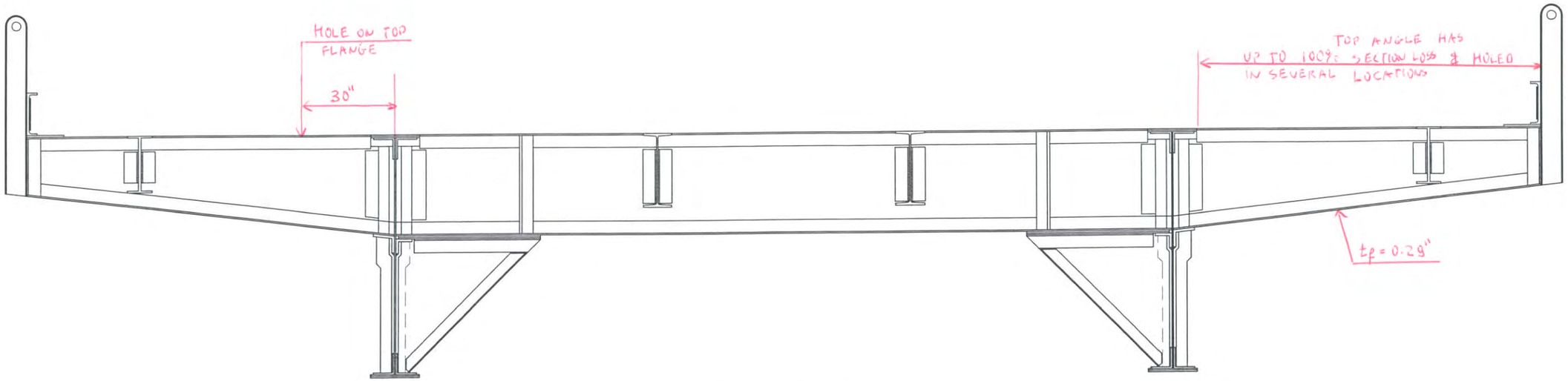

NORTH ELEVATION
(LOOKING SOUTH)

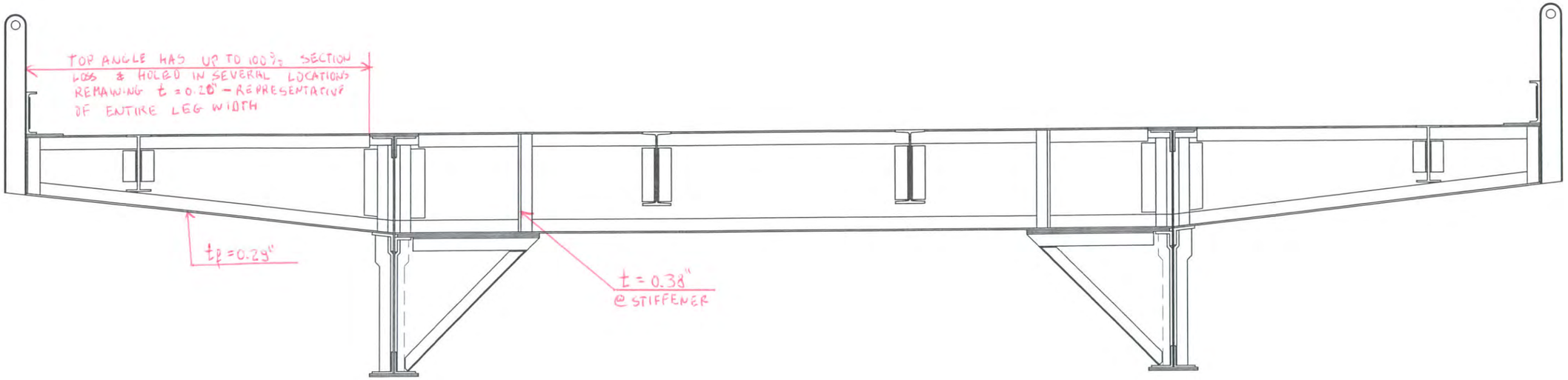

SOUTH ELEVATION
(LOOKING NORTH)

Hoyle, Tanner & Associates, Inc.
Consulting Engineers

150 Dow Street.
Manchester, NH 03101–1227
Tel 603–669–5555, Fax 603–669–4168
Web Page: www.hoyletanner.com
© Copyright 2009

SARAH LONG BRIDGE
SPAN 12 FLOOR BEAM 3

INSPECTED BY: JB & EGW	DATE: 6-1-2009 6-3-2009	SCALE: 3/8" = 1'–0"

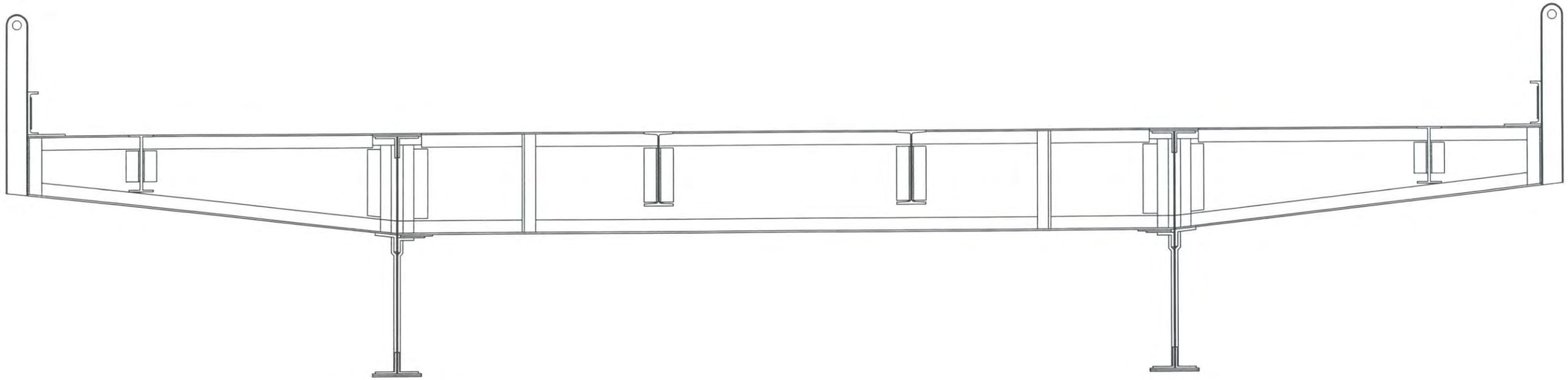

NORTH ELEVATION
(LOOKING SOUTH)

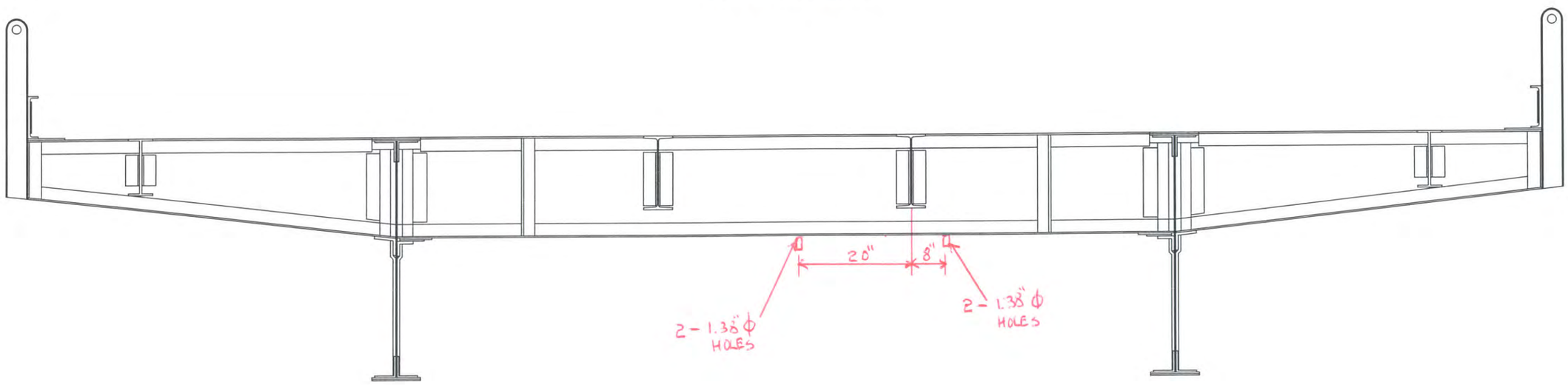

SOUTH ELEVATION
(LOOKING NORTH)

Hoyle, Tanner Associates, Inc.
Consulting Engineers
150 Dow Street.
Manchester, NH 03101-1227
Tel 603-669-5555, Fax 603-669-4168
Web Page: www.hoyletanner.com
© Copyright 2009

SARAH LONG BRIDGE
SPAN 15 FLOOR BEAM 1

INSPECTED BY: JB & EGW	DATE: 5-28-2009	SCALE: 3/8" = 1'-0"

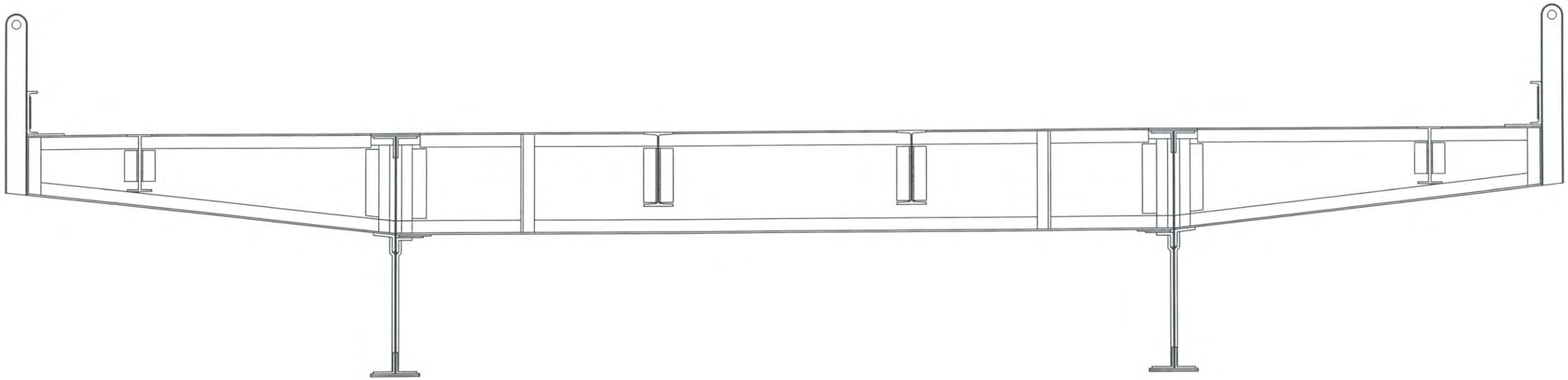

NORTH ELEVATION
(LOOKING SOUTH)

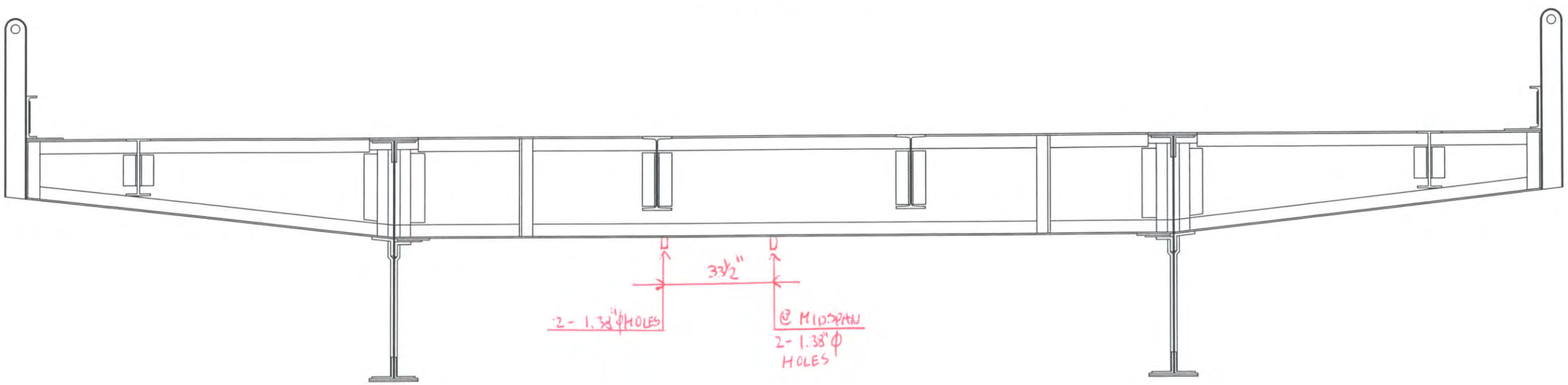

SOUTH ELEVATION
(LOOKING NORTH)

Hoyle, Tanner Associates, Inc.
Consulting Engineers
150 Dow Street.
Manchester, NH 03101-1227
Tel 603-669-5555, Fax 603-669-4168
Web Page: www.hoyletanner.com
© Copyright 2009

SARAH LONG BRIDGE
SPAN 15 FLOOR BEAM 2

INSPECTED BY: JB & EGW	DATE: 5-23-09	SCALE: ⅜" = 1'-0"

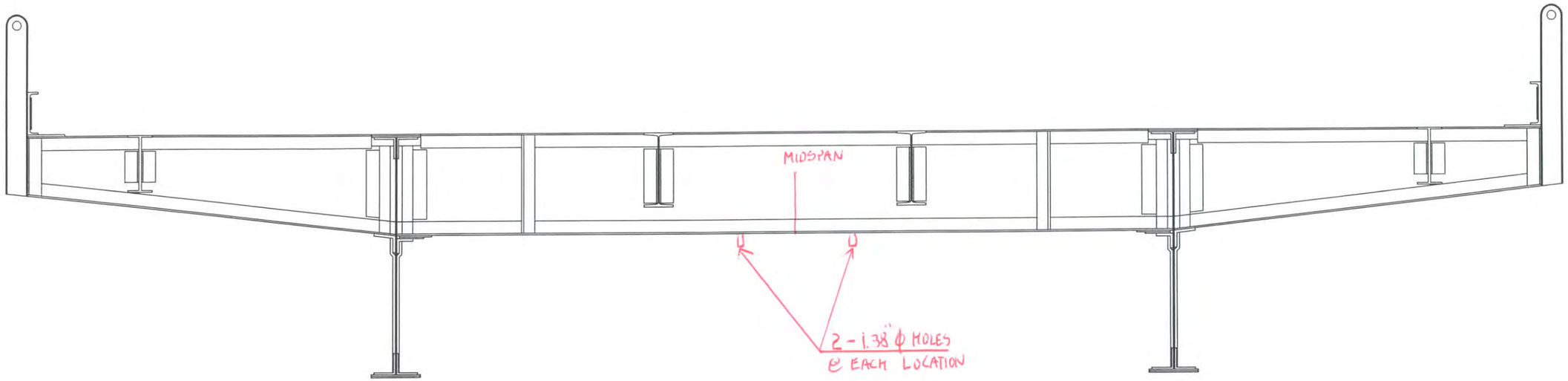

NORTH ELEVATION
(LOOKING SOUTH)

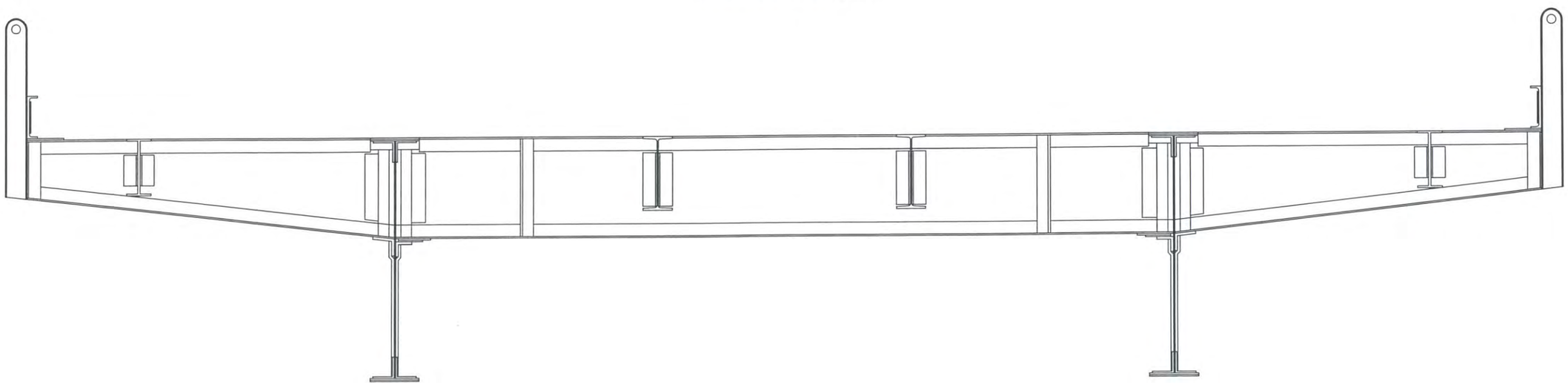

SOUTH ELEVATION
(LOOKING NORTH)

Hoyle, Tanner Associates, Inc.
Consulting Engineers
150 Dow Street.
Manchester, NH 03101-1227
Tel 603-669-5555, Fax 603-669-4168
Web Page: www.hoyletanner.com
© Copyright 2009

SARAH LONG BRIDGE
SPAN 15 FLOOR BEAM 3

INSPECTED BY: JB & EGW	DATE: 5-28-04	SCALE: ⅜" = 1'-0"

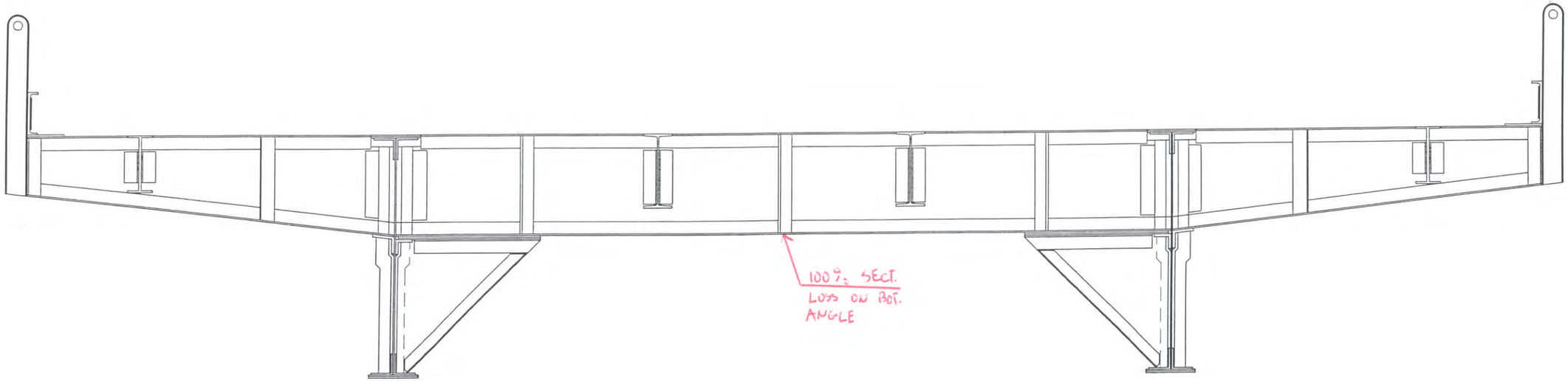

NORTH ELEVATION
(LOOKING SOUTH)

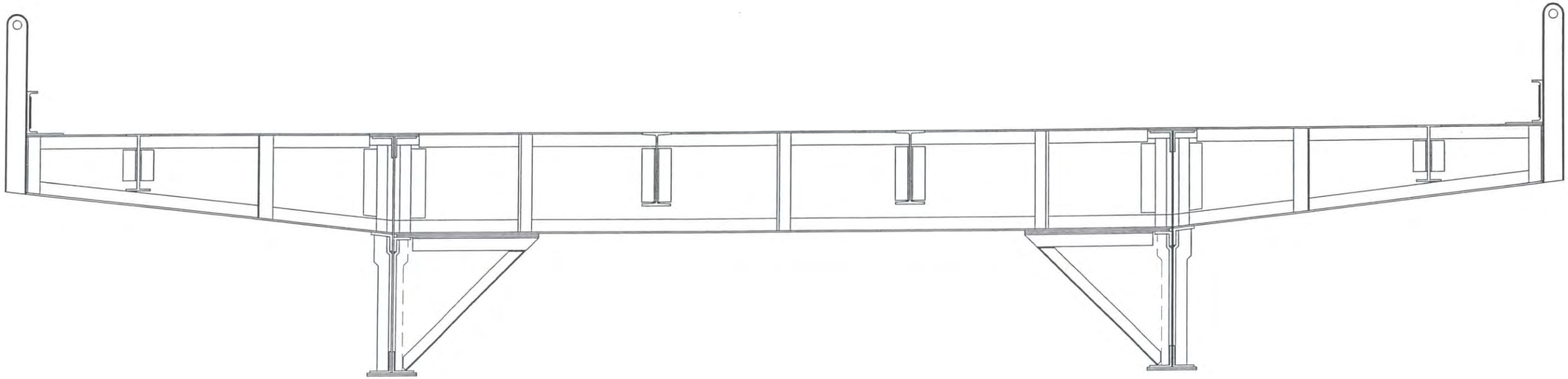

SOUTH ELEVATION
(LOOKING NORTH)

Hoyle, Tanner & Associates, Inc.
Consulting Engineers
150 Dow Street.
Manchester, NH 03101-1227
Tel 603-669-5555, Fax 603-669-4168
Web Page: www.hoyletanner.com
© Copyright 2009

SARAH LONG BRIDGE
SPAN 15 FLOOR BEAM 4

INSPECTED BY: JB & EGW	DATE: 6-1-2009 5-28-09	SCALE: 3/8" = 1'-0"

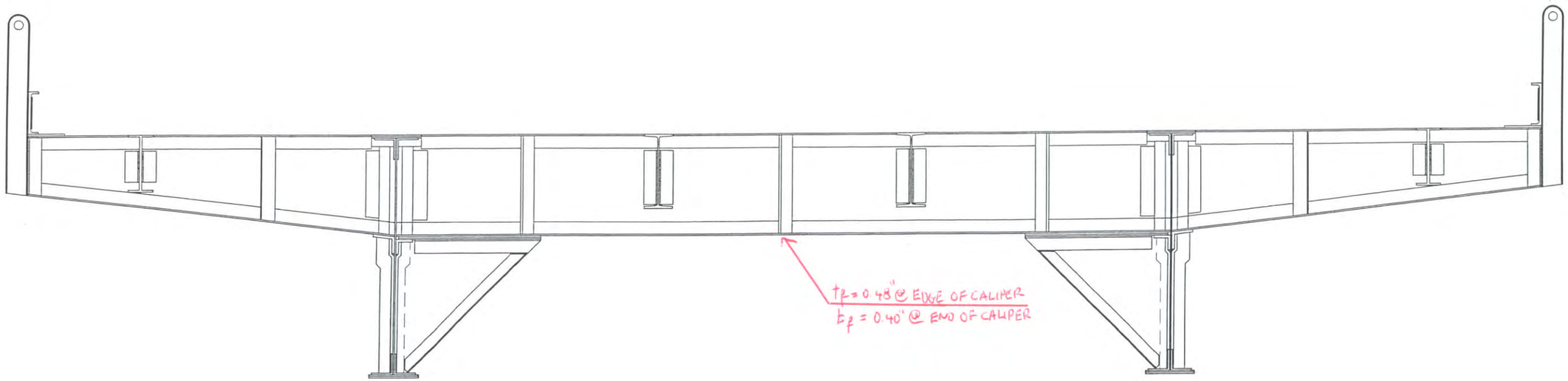

NORTH ELEVATION
(LOOKING SOUTH)

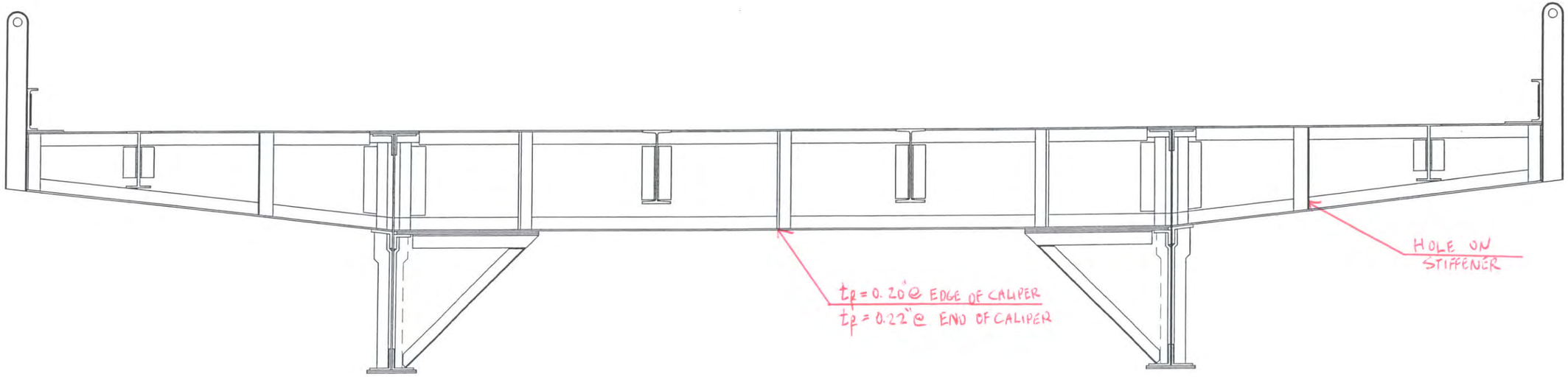

SOUTH ELEVATION
(LOOKING NORTH)

Hoyle, Tanner Associates, Inc.
Consulting Engineers

150 Dow Street.
Manchester, NH 03101-1227
Tel 603-669-5555, Fax 603-669-4168
Web Page: www.hoyletanner.com
© Copyright 2009

SARAH LONG BRIDGE
SPAN 21 FLOOR BEAM 0

INSPECTED BY: JB & EGW	DATE: 6-2-2003 6-4-2003	SCALE: 1/8" = 1'-0"

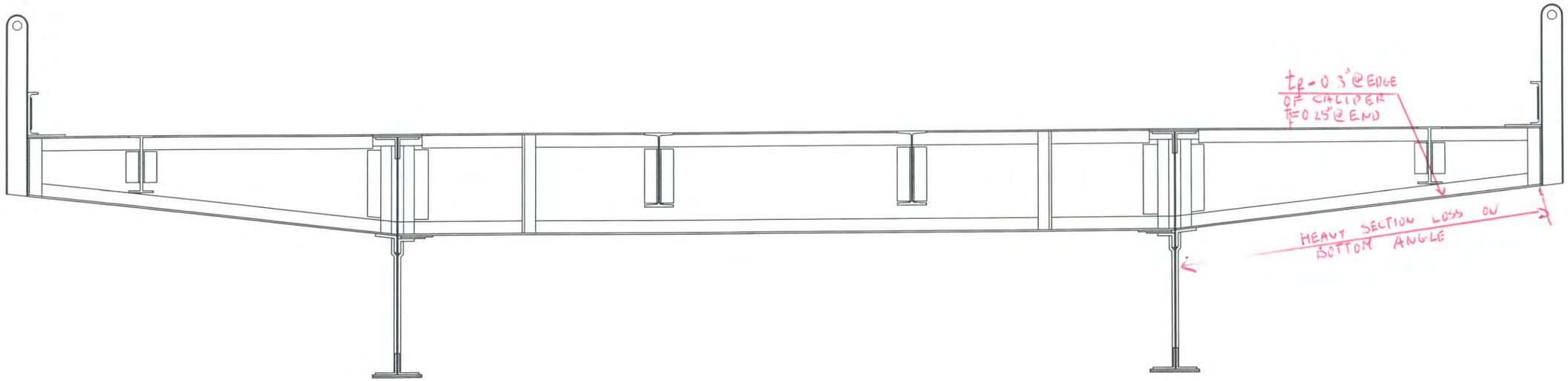

NORTH ELEVATION
(LOOKING SOUTH)

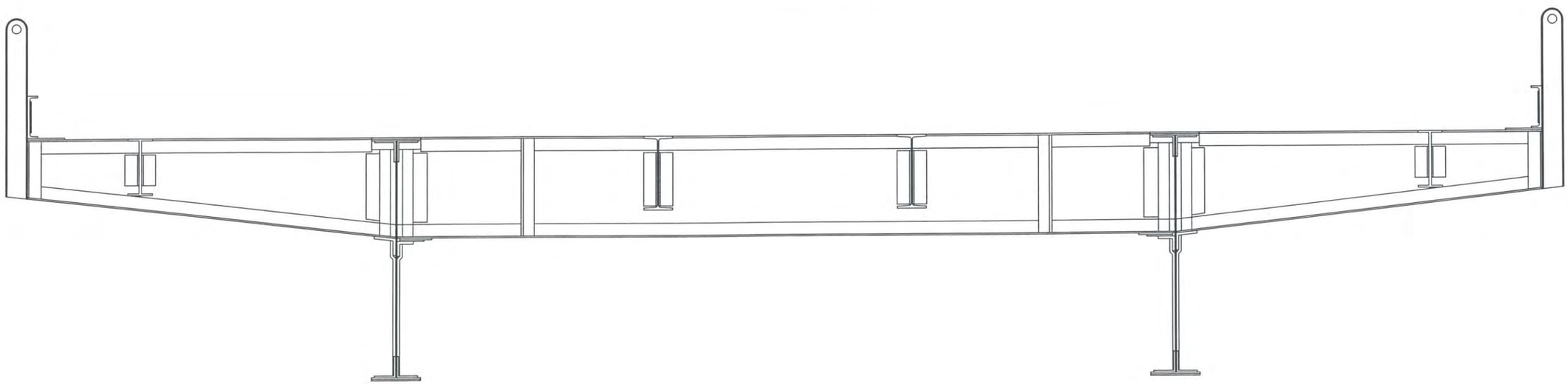

SOUTH ELEVATION
(LOOKING NORTH)

Hoyle, Tanner Associates, Inc.
Consulting Engineers
150 Dow Street.
Manchester, NH 03101-1227
Tel 603-669-5555, Fax 603-669-4168
Web Page: www.hoyletanner.com
© Copyright 2009

SARAH LONG BRIDGE
SPAN 21 FLOOR BEAM 2

INSPECTED BY: JB & EGW	DATE: 6-4-2009	SCALE: ⅜" = 1'-0"

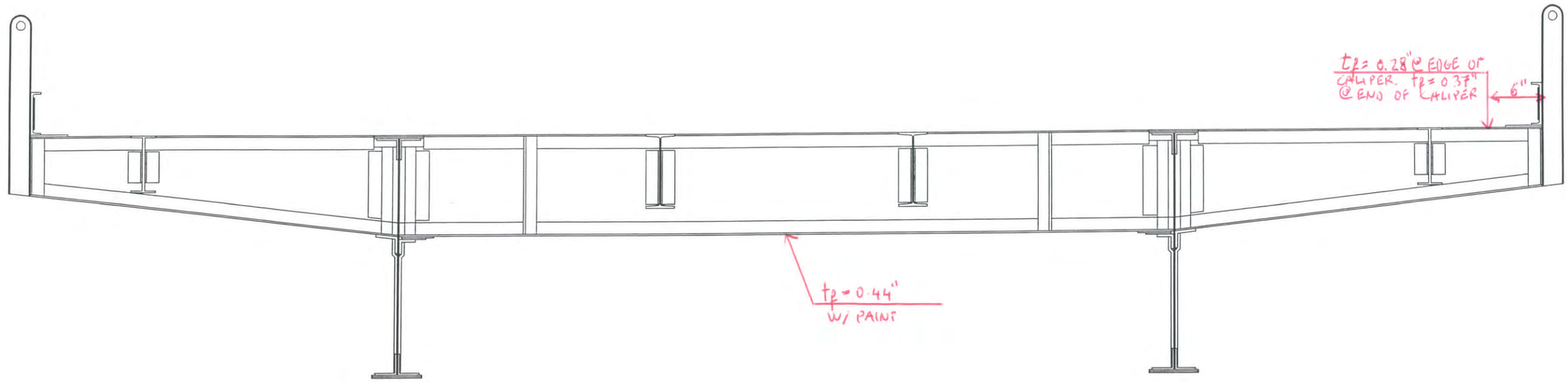

NORTH ELEVATION
(LOOKING SOUTH)

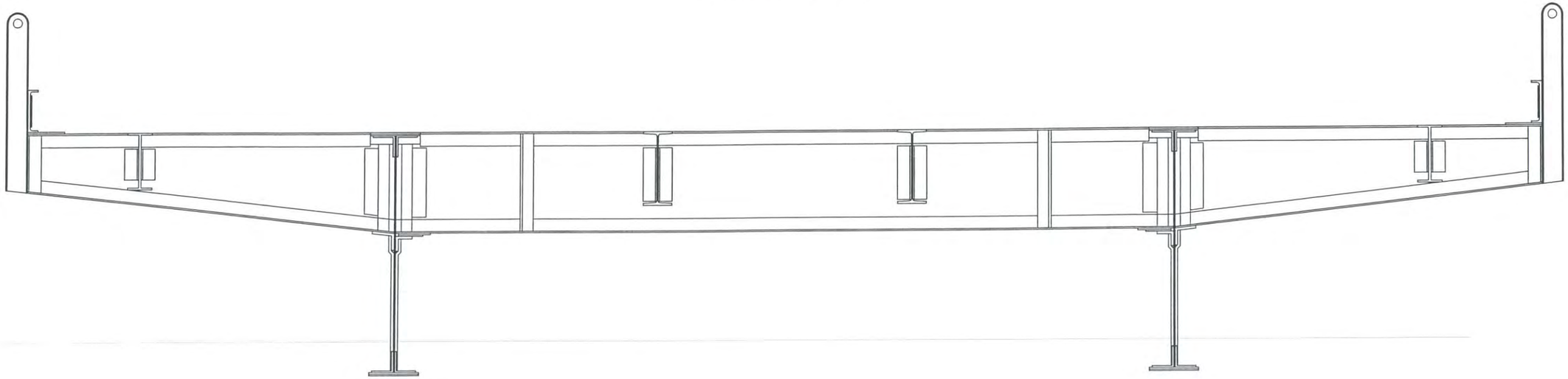

SOUTH ELEVATION
(LOOKING NORTH)

Hoyle, Tanner Associates, Inc.
Consulting Engineers
150 Dow Street,
Manchester, NH 03101-1227
Tel 603-669-5555, Fax 603-669-4168
Web Page: www.hoyletanner.com
© Copyright 2009

SARAH LONG BRIDGE
SPAN 21 FLOOR BEAM 3

INSPECTED BY: JB & EGW	DATE: 6-4-2004	SCALE: 3/8" = 1'-0"

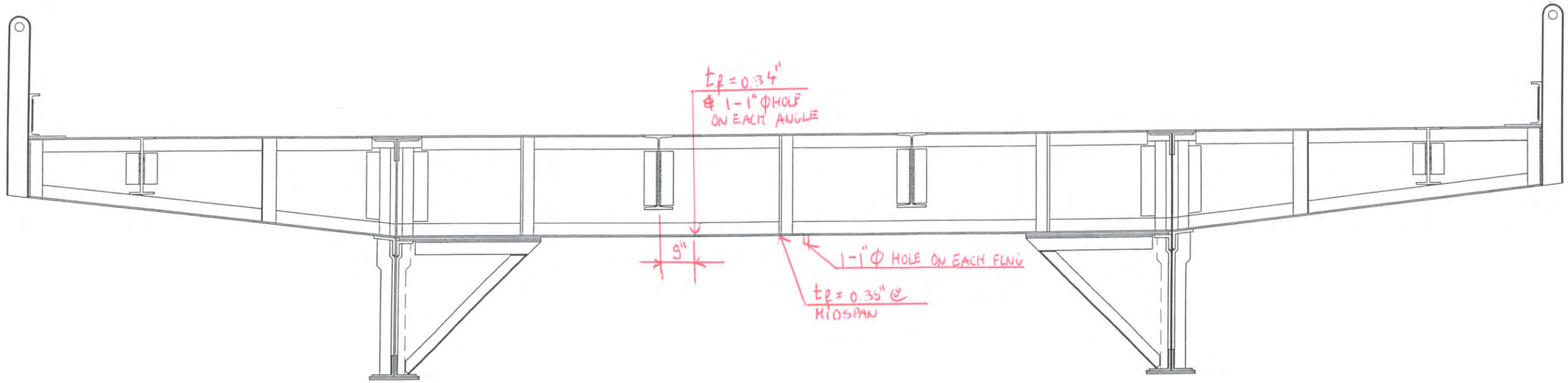

NORTH ELEVATION
(LOOKING SOUTH)

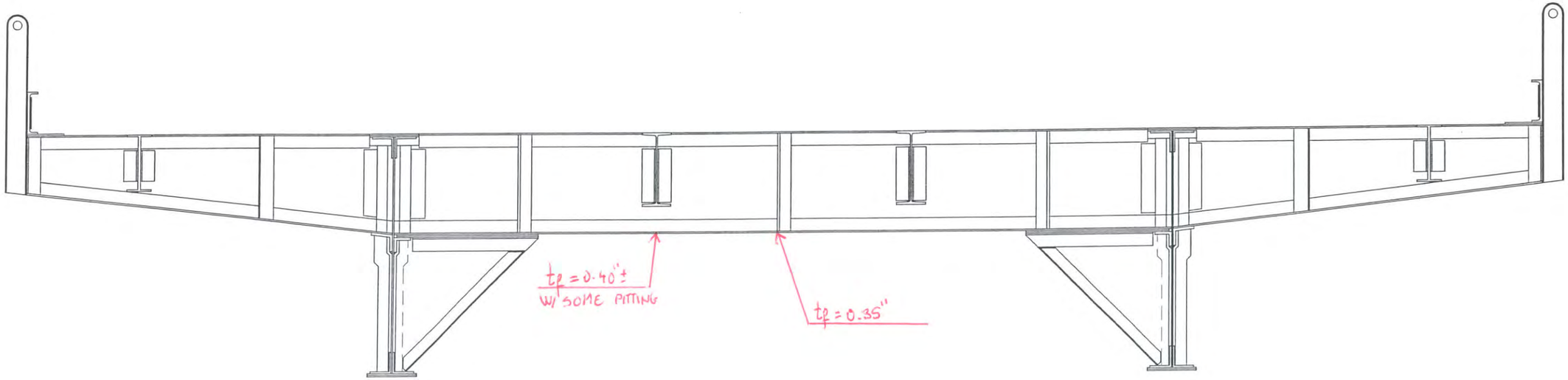

SOUTH ELEVATION
(LOOKING NORTH)

Hoyle, Tanner & Associates, Inc.
Consulting Engineers
150 Dow Street.
Manchester, NH 03101-1227
Tel 603-669-5555, Fax 603-669-4168
Web Page: www.hoyletanner.com
© Copyright 2009

SARAH LONG BRIDGE
SPAN 22 FLOOR BEAM 0

INSPECTED BY: JB & EGW	DATE: 6-6-2009	SCALE: 3/8" = 1'-0"

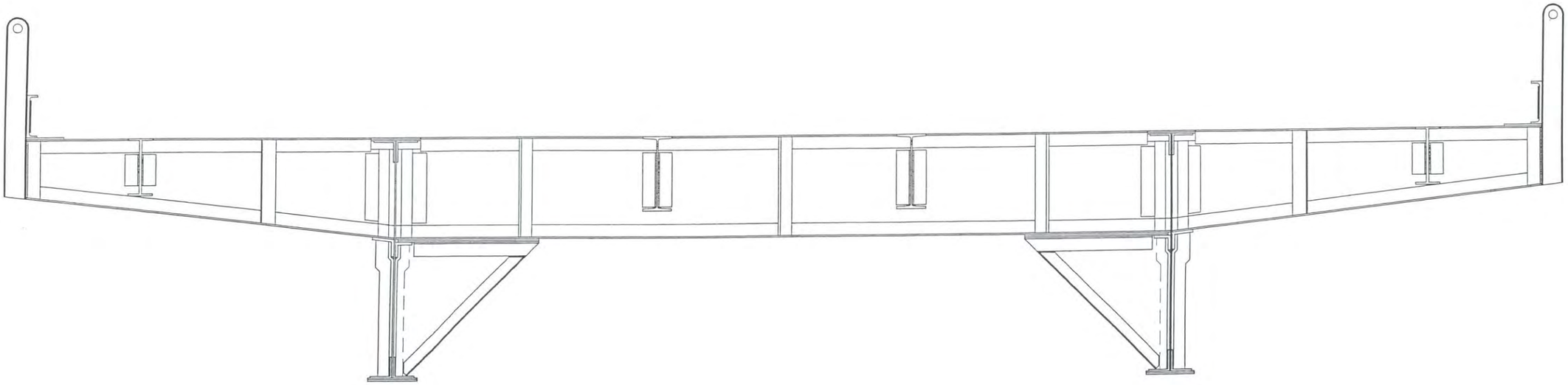

NORTH ELEVATION
(LOOKING SOUTH)

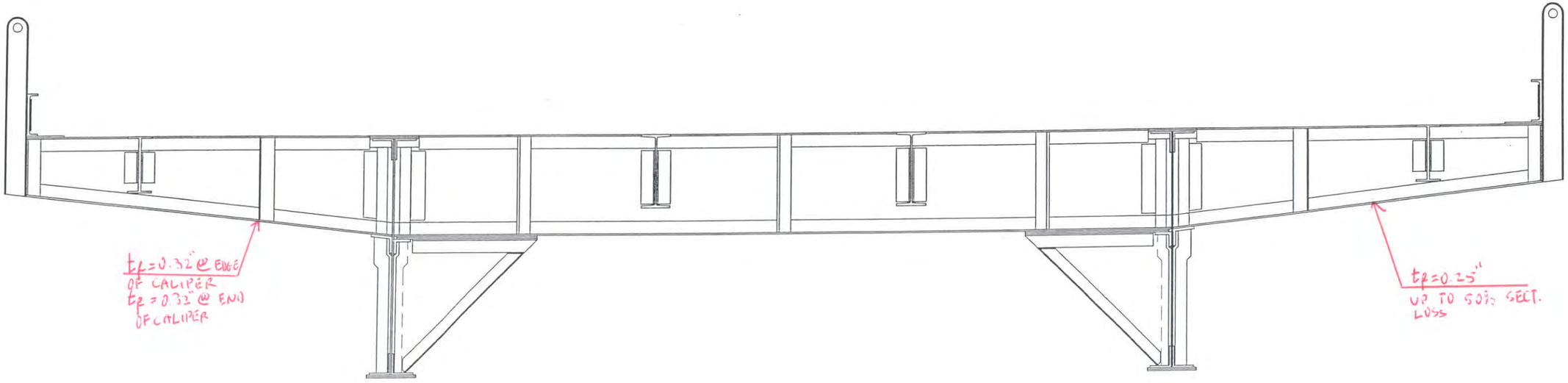

SOUTH ELEVATION
(LOOKING NORTH)

Hoyle, Tanner Associates, Inc.
Consulting Engineers

150 Dow Street,
Manchester, NH 03101-1227
Tel 603-669-5555, Fax 603-669-4168
Web Page: www.hoyletanner.com
© Copyright 2009

SARAH LONG BRIDGE
SPAN 23 FLOOR BEAM 0

INSPECTED BY: JB EGW	DATE: 6-4-2013	SCALE: 3/8" = 1'-0"

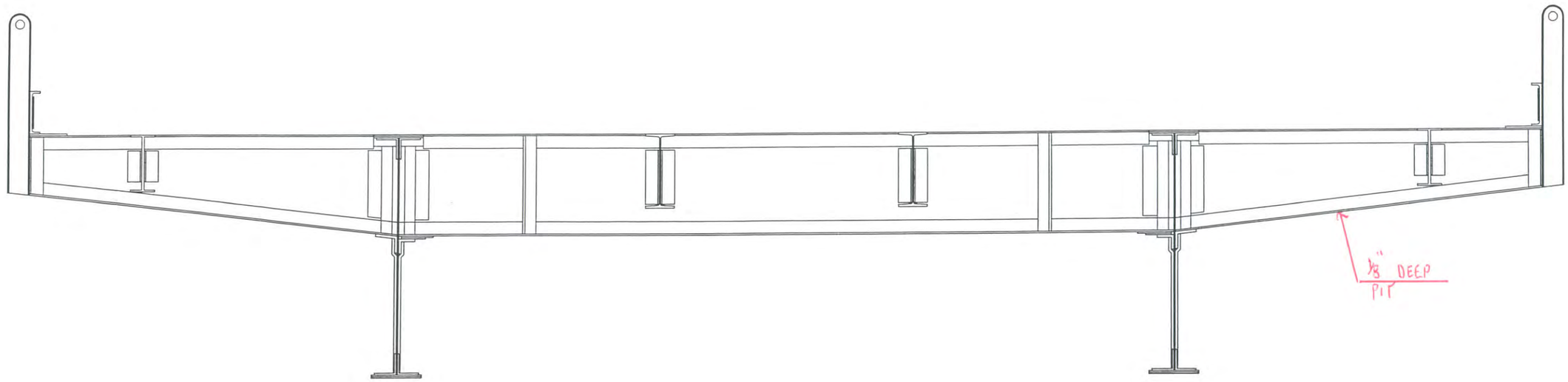

NORTH ELEVATION
(LOOKING SOUTH)

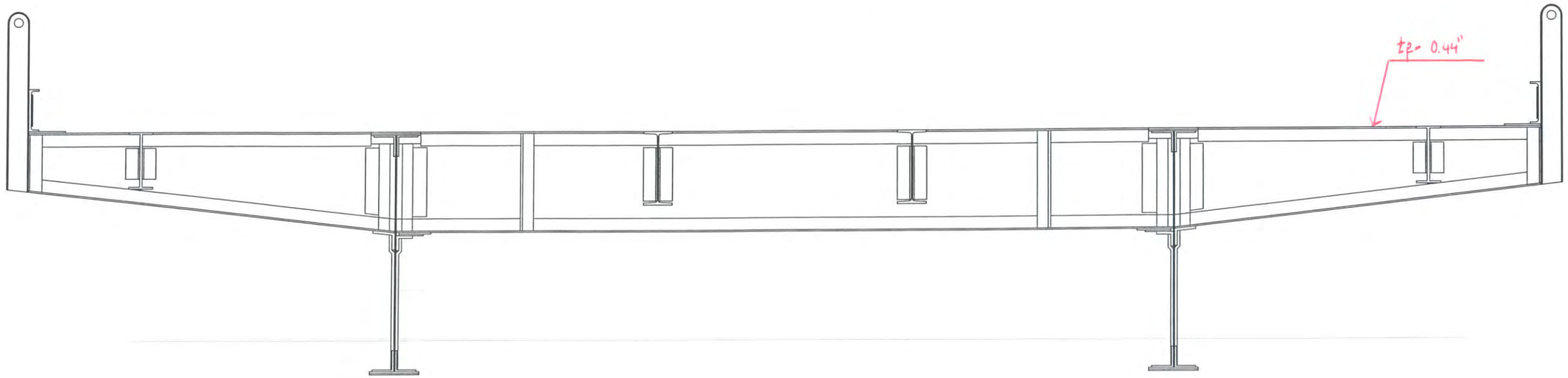

SOUTH ELEVATION
(LOOKING NORTH)

Hoyle, Tanner Associates, Inc.
Consulting Engineers
150 Dow Street.
Manchester, NH 03101-1227
Tel 603-669-5555, Fax 603-669-4168
Web Page: www.hoyletanner.com
© Copyright 2009

SARAH LONG BRIDGE
SPAN 23 FLOOR BEAM 3

INSPECTED BY: JB	DATE: 6-4-2003	SCALE: 3/8" = 1'-0"
& EGW		

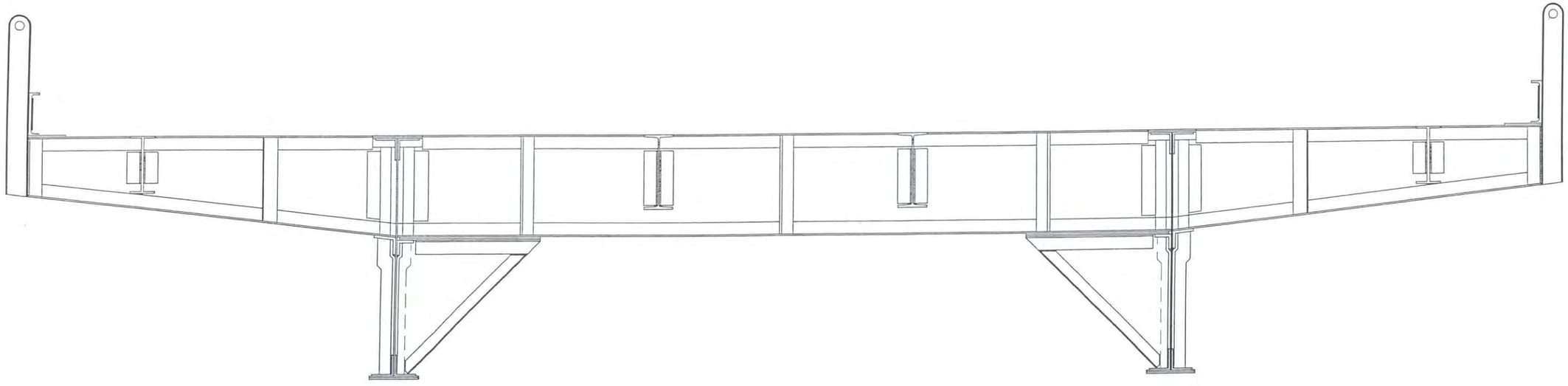

NORTH ELEVATION
(LOOKING SOUTH)

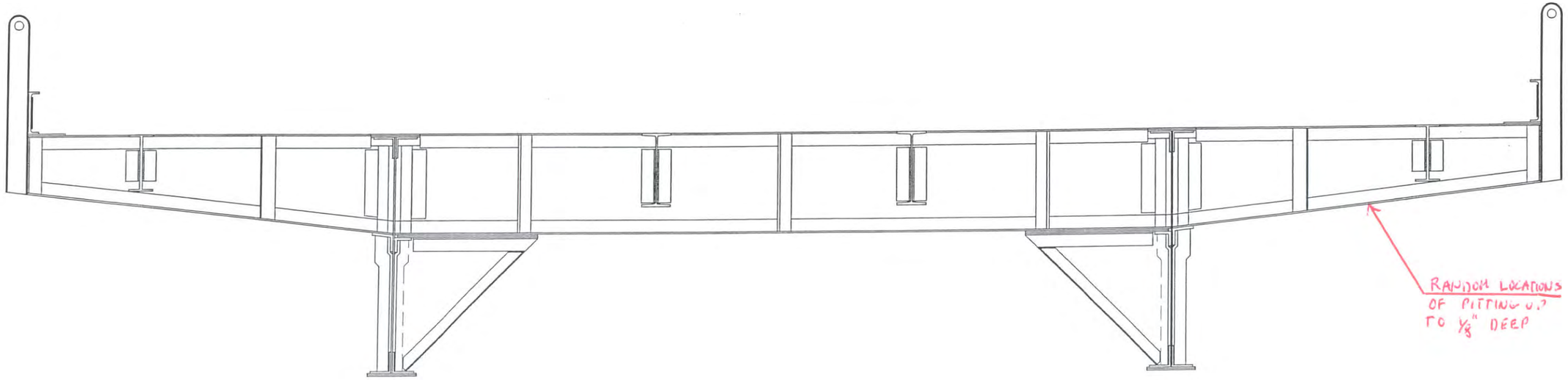

SOUTH ELEVATION
(LOOKING NORTH)

Hoyle, Tanner & Associates, Inc.
Consulting Engineers

150 Dow Street,
Manchester, NH 03101-1227
Tel 603-669-5555, Fax 603-669-4168
Web Page: www.hoyletanner.com
© Copyright 2009

SARAH LONG BRIDGE
SPAN 24 FLOOR BEAM 0

INSPECTED BY: JB & ELW	DATE: 6-6-2004	SCALE: 3/8" = 1'-0"

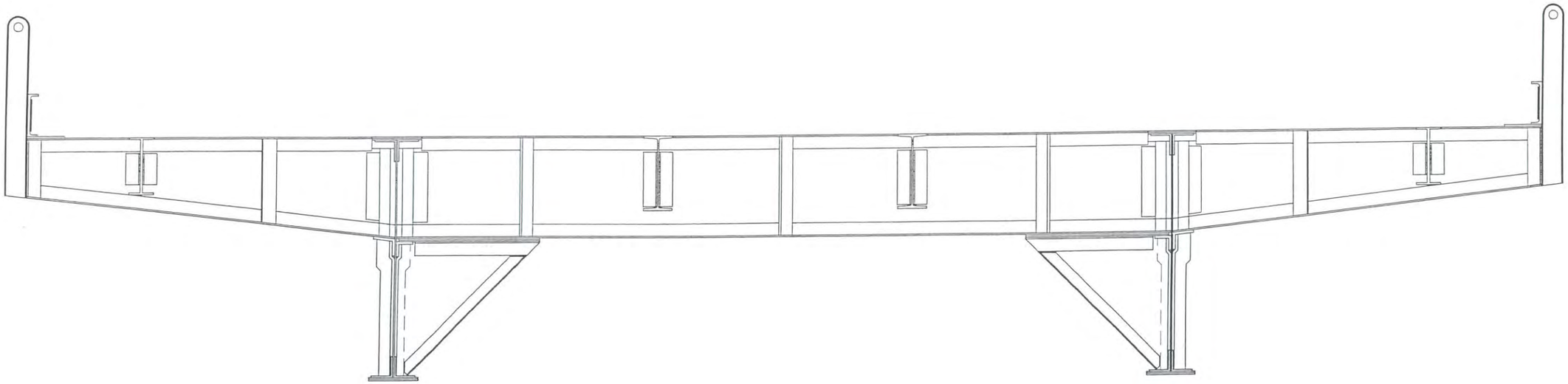

NORTH ELEVATION
(LOOKING SOUTH)

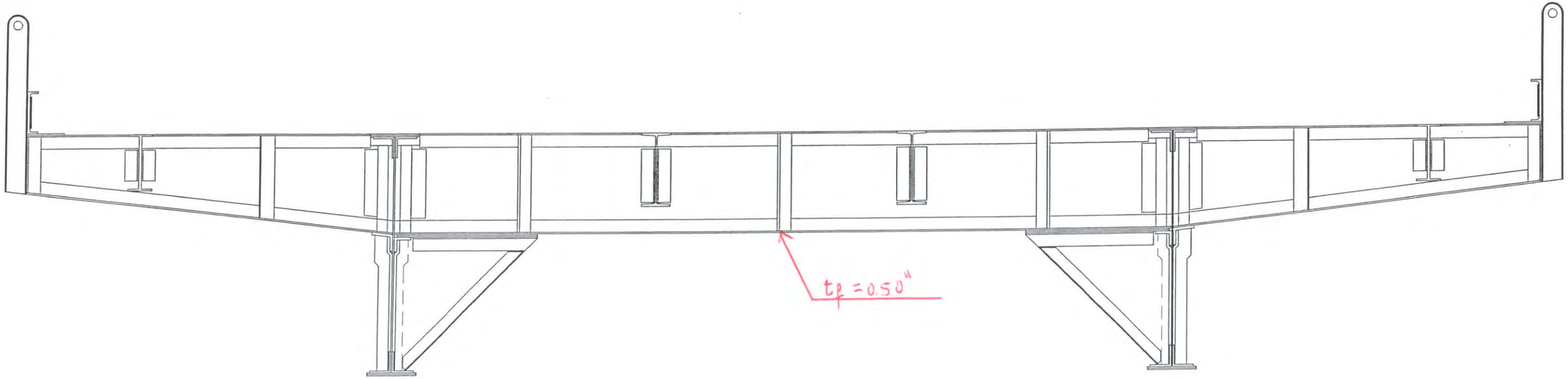

SOUTH ELEVATION
(LOOKING NORTH)

Hoyle, Tanner Associates, Inc.
Consulting Engineers

150 Dow Street,
Manchester, NH 03101-1227
Tel 603-669-5555, Fax 603-669-4168
Web Page: www.hoyletanner.com
© Copyright 2009

SARAH LONG BRIDGE
SPAN 25 FLOOR BEAM 0

INSPECTED BY: JB #EGW	DATE: 6-6-2008	SCALE: 3/8" = 1'-0"

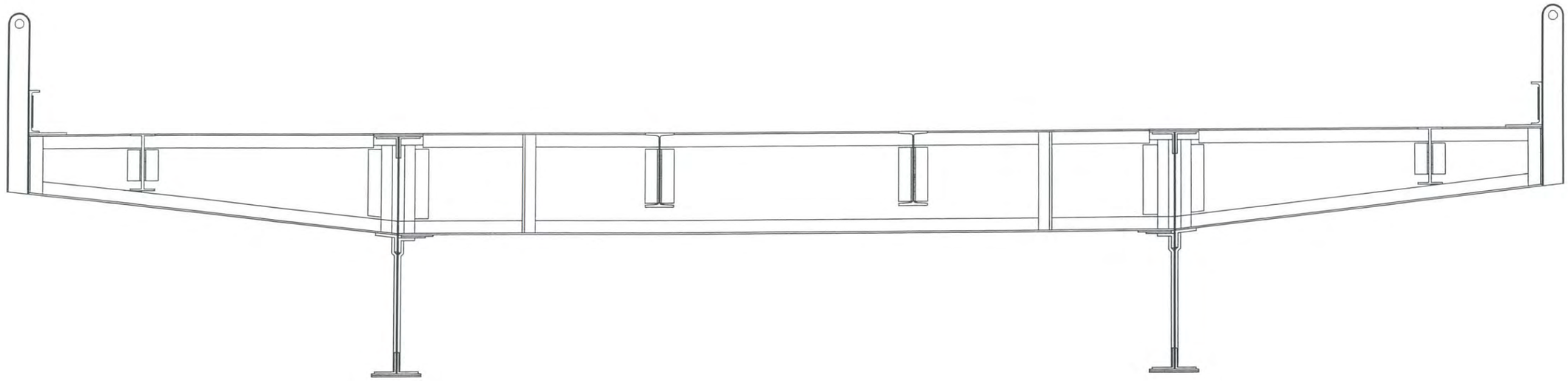

NORTH ELEVATION
(LOOKING SOUTH)

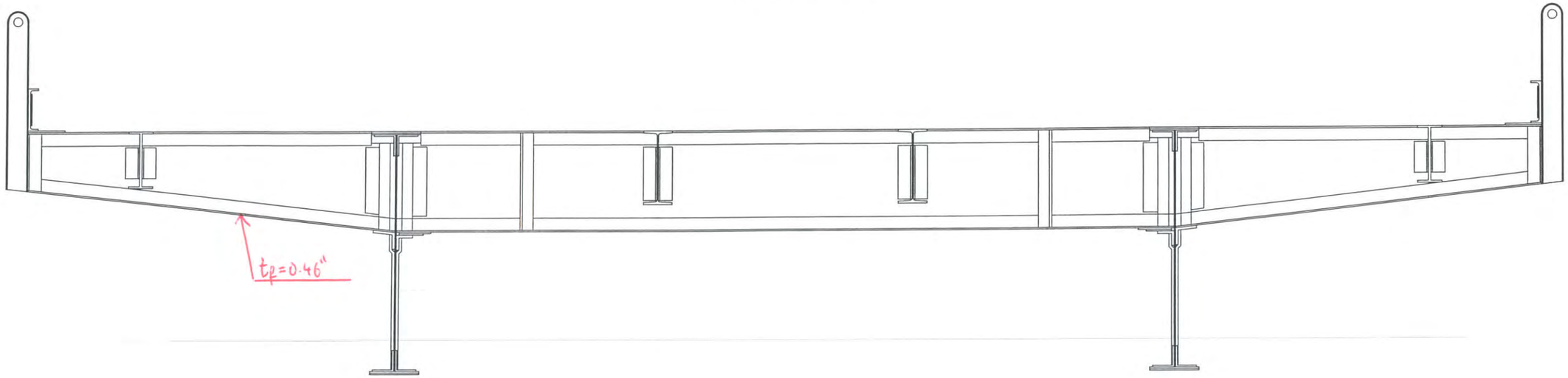

SOUTH ELEVATION
(LOOKING NORTH)

Hoyle, Tanner & Associates, Inc.
Consulting Engineers
150 Dow Street.
Manchester, NH 03101-1227
Tel 603-669-5555, Fax 603-669-4168
Web Page: www.hoyletanner.com
© Copyright 2009

SARAH LONG BRIDGE
SPAN 25 FLOOR BEAM 2

INSPECTED BY: SB & EGW	DATE: 6-6-2009	SCALE: 3/8" = 1'-0"

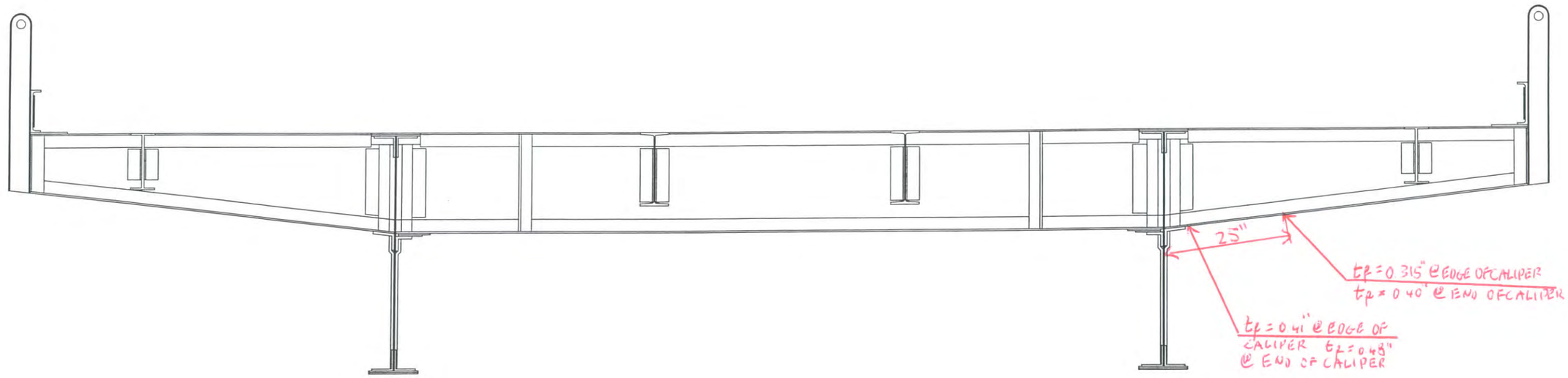

NORTH ELEVATION
(LOOKING SOUTH)

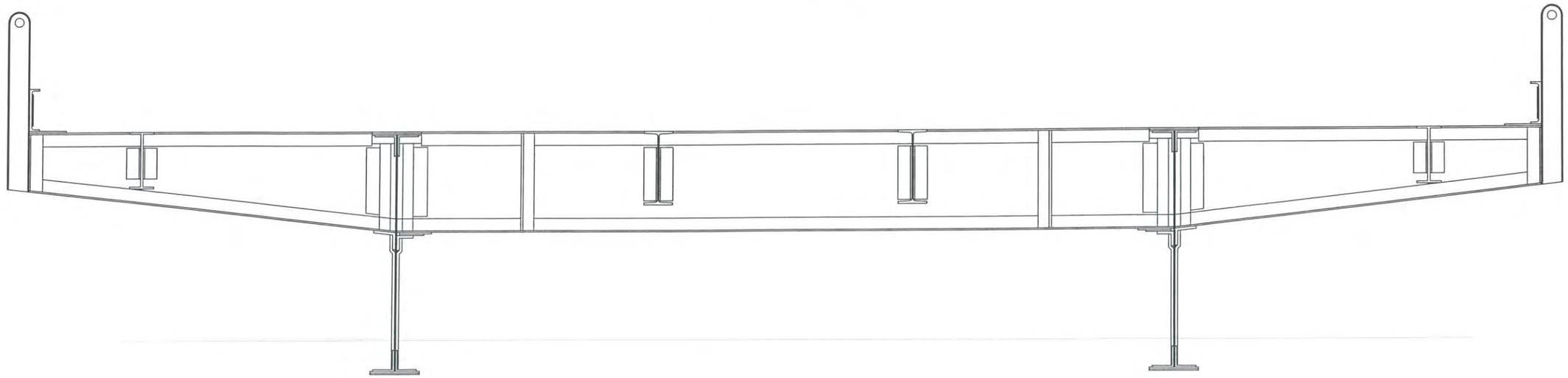

SOUTH ELEVATION
(LOOKING NORTH)

Hoyle, Tanner Associates, Inc.
Consulting Engineers
150 Dow Street.
Manchester, NH 03101-1227
Tel 603-669-5555, Fax 603-669-4168
Web Page: www.hoyletanner.com
© Copyright 2009

SARAH LONG BRIDGE
SPAN 25 FLOOR BEAM 3

INSPECTED BY: JB	DATE: 6-6-2004	SCALE: 3/8" = 1'-0"
A. EGW	6-4-2004	

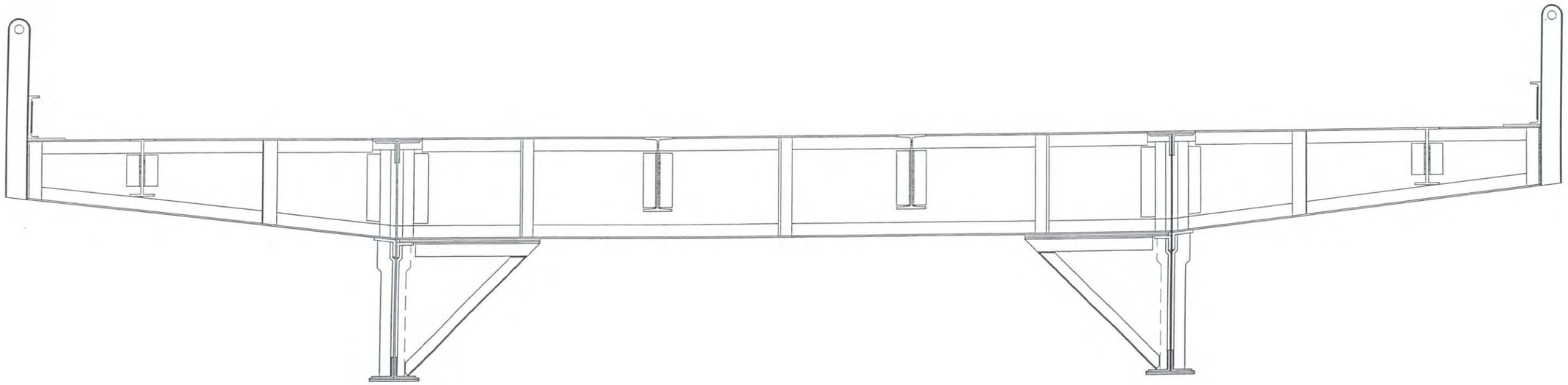

NORTH ELEVATION
(LOOKING SOUTH)

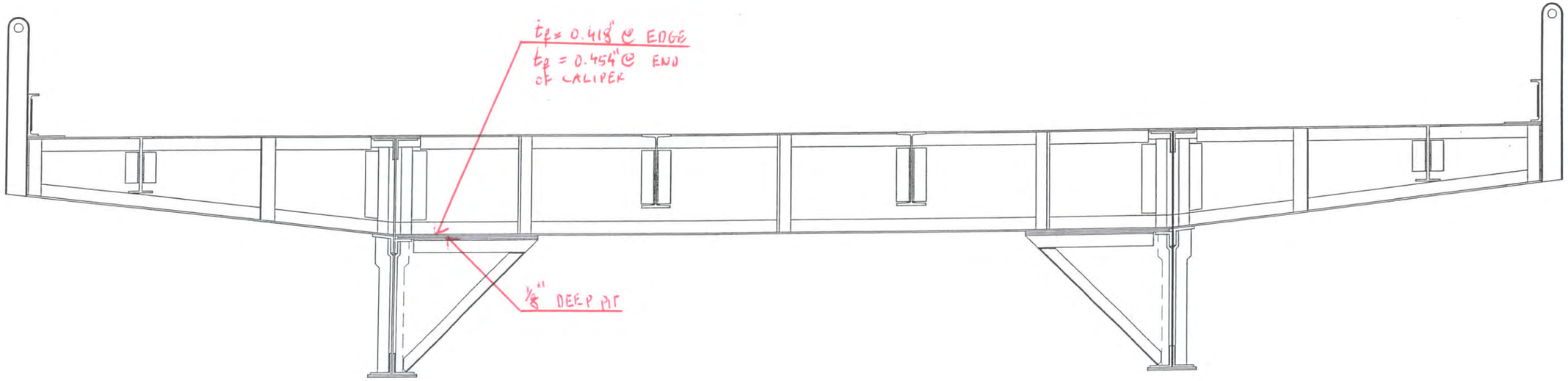

SOUTH ELEVATION
(LOOKING NORTH)

Hoyle, Tanner Associates, Inc.
Consulting Engineers

150 Dow Street
Manchester, NH 03101-1227
Tel 603-669-5555, Fax 603-669-4168
Web Page: www.hoyletanner.com
© Copyright 2009

SARAH LONG BRIDGE
SPAN 27 FLOOR BEAM 0

INSPECTED BY: JB & EGW	DATE:	SCALE: 3/8" = 1'-0"

Section C:

Stringer Condition

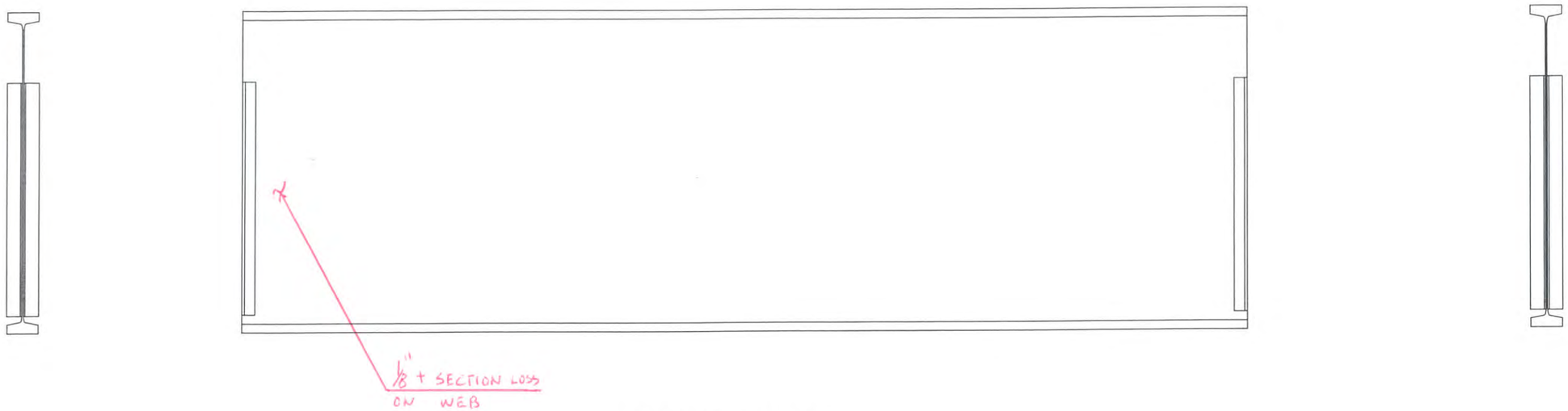

EAST ELEVATION
(LOOKING WEST)

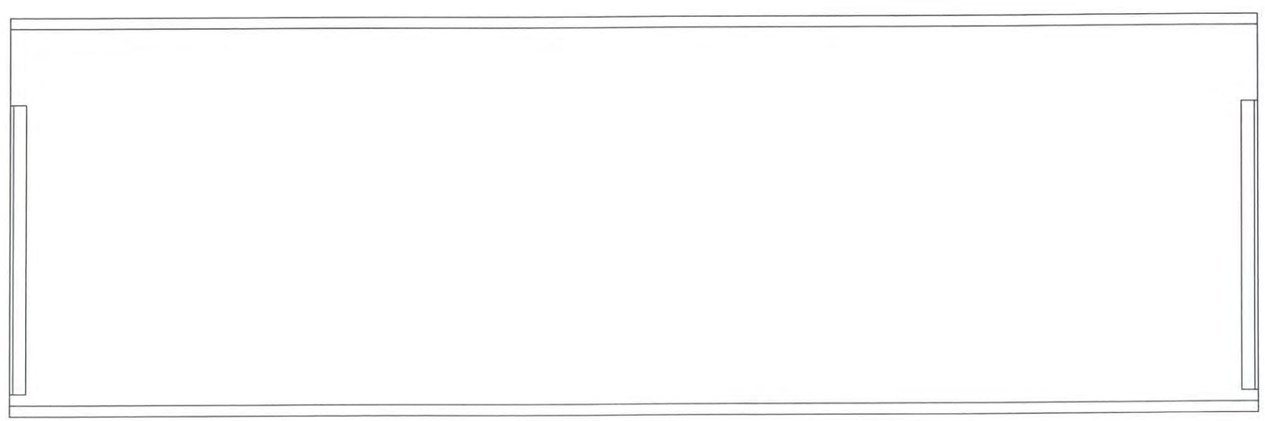

WEST ELEVATION
(LOOKING EAST)

Hoyle, Tanner Associates, Inc.
Consulting Engineers
150 Dow Street.
Manchester, NH 03101-1227
Tel 603-669-5555, Fax 603-669-4168
Web Page: www.hoyletanner.com
© Copyright 2009

SARAH LONG BRIDGE
SPAN 1 S1 CURB STRINGER BAY 1

INSPECTED BY: JB	DATE: 6-5-2009	SCALE: 3/8" = 1'-0" H
& EGW		3/4" = 1'-0" V

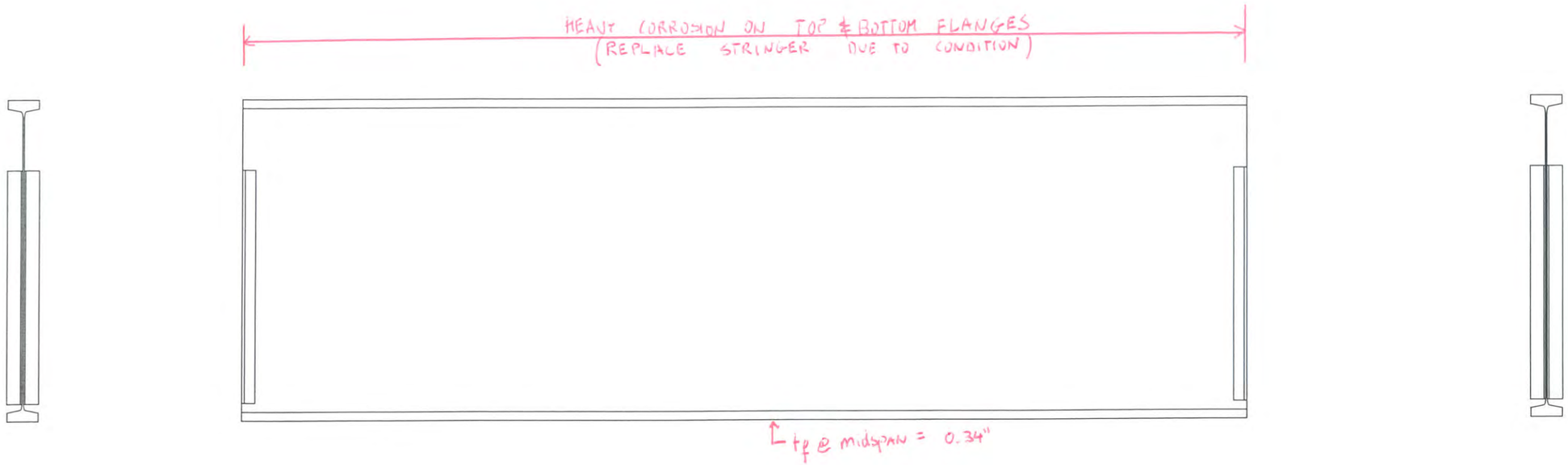

EAST ELEVATION
(LOOKING WEST)

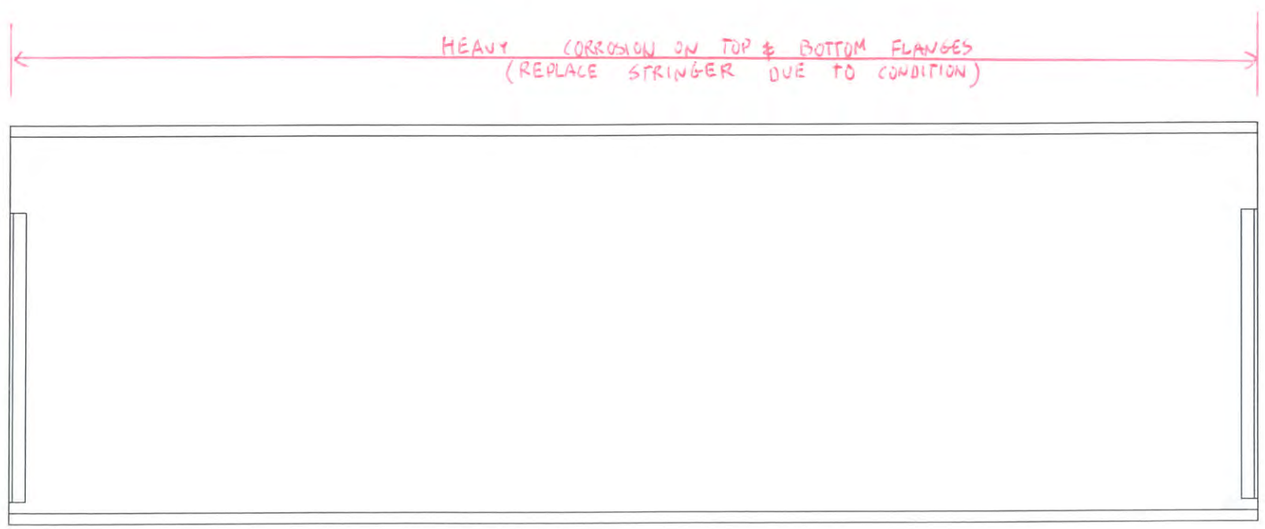

WEST ELEVATION
(LOOKING EAST)

Hoyle, Tanner Associates, Inc.
Consulting Engineers
150 Dow Street
Manchester, NH 03101-1227
Tel 603-669-5555, Fax 603-669-4168
Web Page: www.hoyletanner.com
© Copyright 2009

SARAH LONG BRIDGE
SPAN 1 S1 CURB STRINGER BAY 3

INSPECTED BY: JB & EGW	DATE: 6-5-2009	SCALE: ⅛" = 1'-0" H ¾" = 1'-0" V

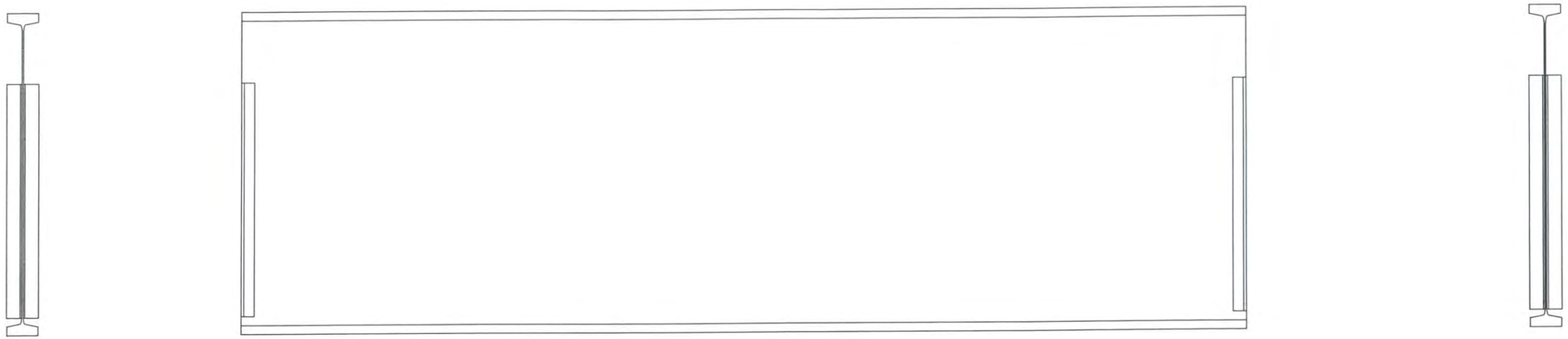

EAST ELEVATION
(LOOKING WEST)

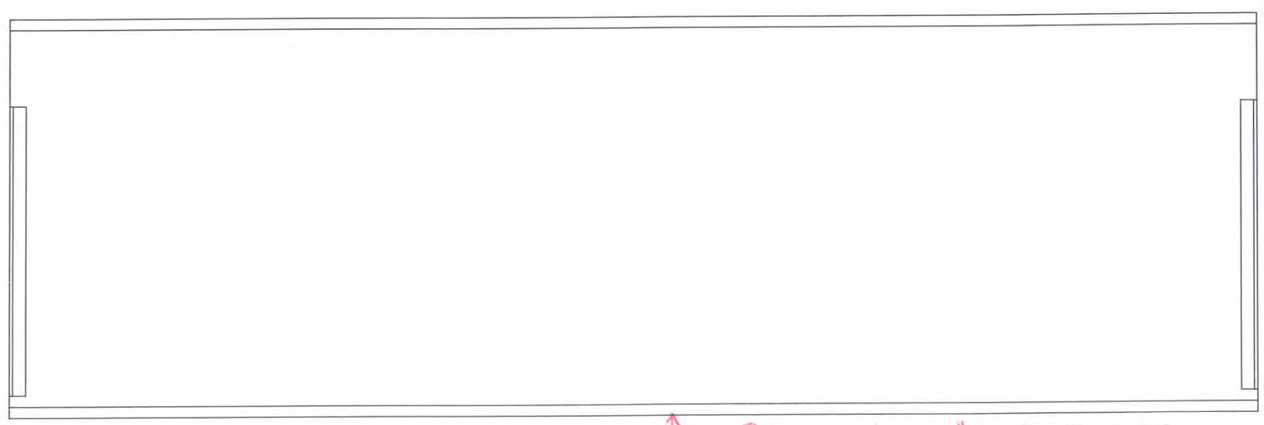

@ MIDSPAN $t_f = 0.40"$ @ TIP OF CALIPER
$t_f = 0.45"$ @ END OF CALIPER

WEST ELEVATION
(LOOKING EAST)

Hoyle, Tanner Associates, Inc.
Consulting Engineers
150 Dow Street.
Manchester, NH 03101-1227
Tel 603-669-5555, Fax 603-669-4168
Web Page: www.hoyletanner.com
© Copyright 2009

SARAH LONG BRIDGE
SPAN 1 S4 CURB STRINGER BAY 1

INSPECTED BY: JB	DATE: 5-29-2009	SCALE: 3/8" = 1'-0" H
@ E&W		3/4" = 1'-0" V

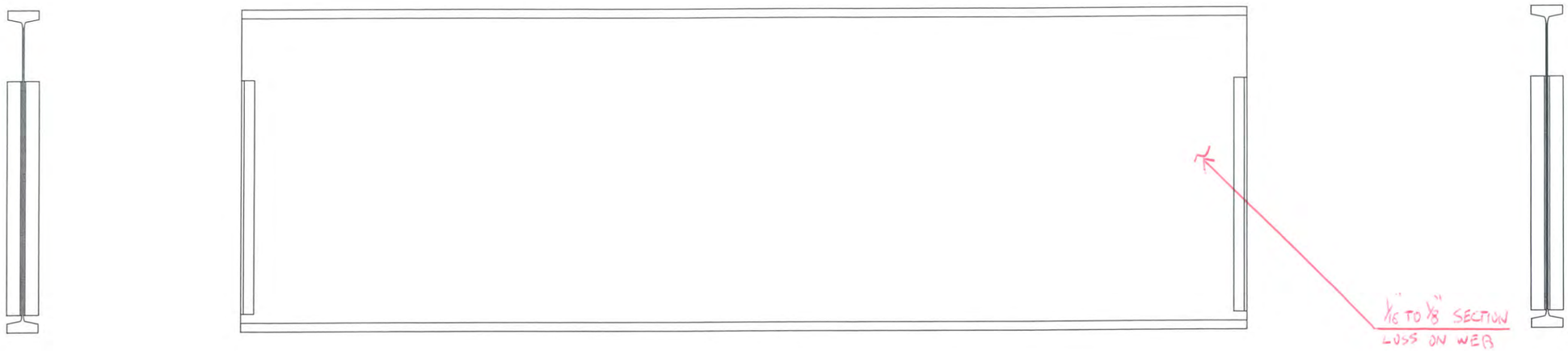

EAST ELEVATION
(LOOKING WEST)

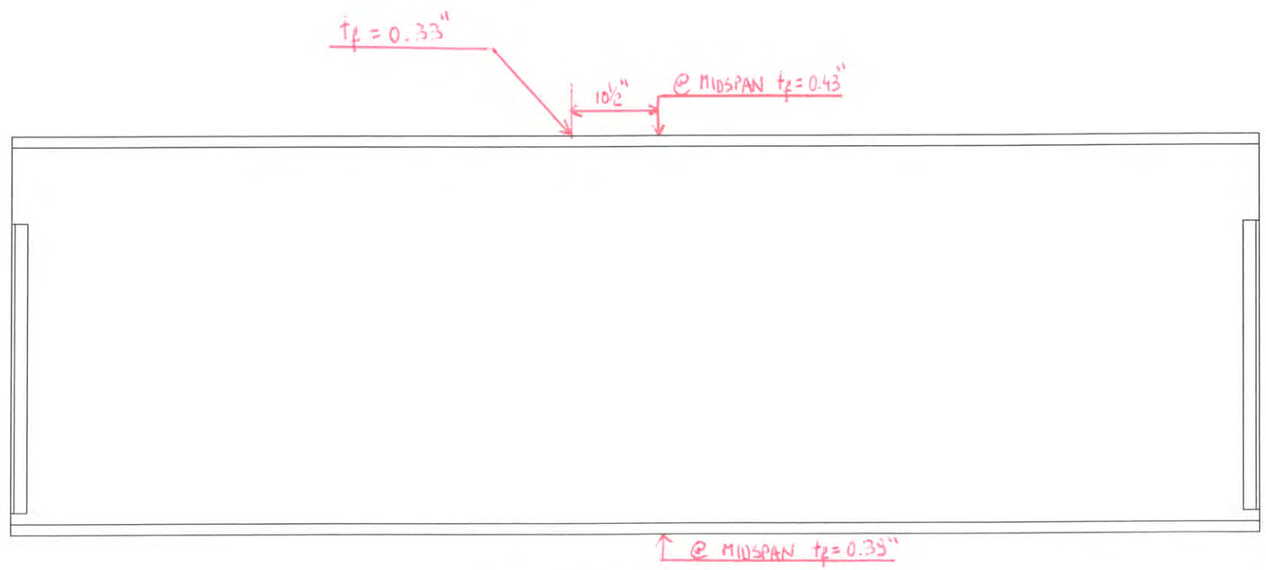

WEST ELEVATION
(LOOKING EAST)

Hoyle, Tanner Associates, Inc.
Consulting Engineers
150 Dow Street
Manchester, NH 03101-1227
Tel 603-669-5555, Fax 603-669-4168
Web Page: www.hoyletanner.com
© Copyright 2009

SARAH LONG BRIDGE
SPAN 2 S1 CURB STRINGER BAY 3

INSPECTED BY: JB & PGW	DATE: 6-5-2009	SCALE: ⅜" = 1'-0" H ¾" = 1'-0" V

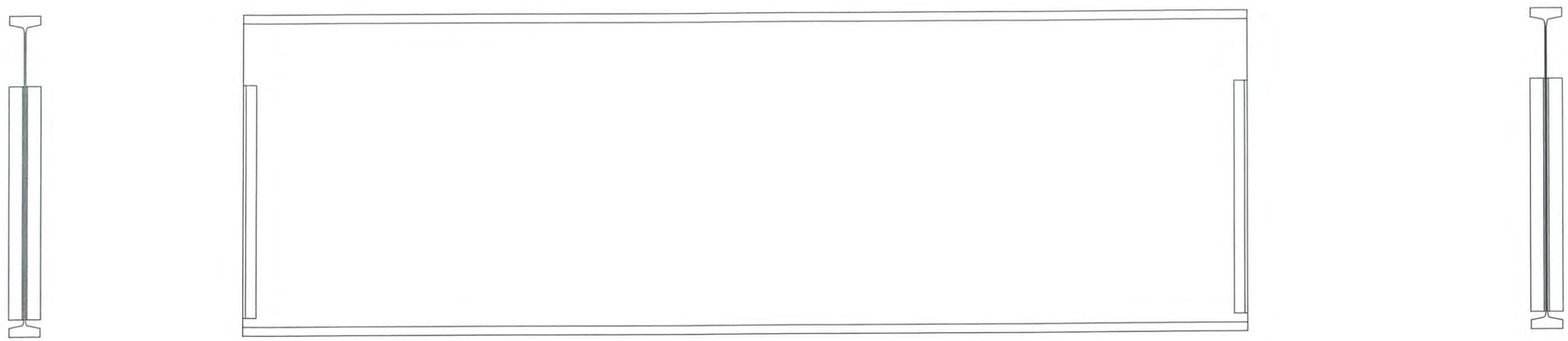

EAST ELEVATION
(LOOKING WEST)

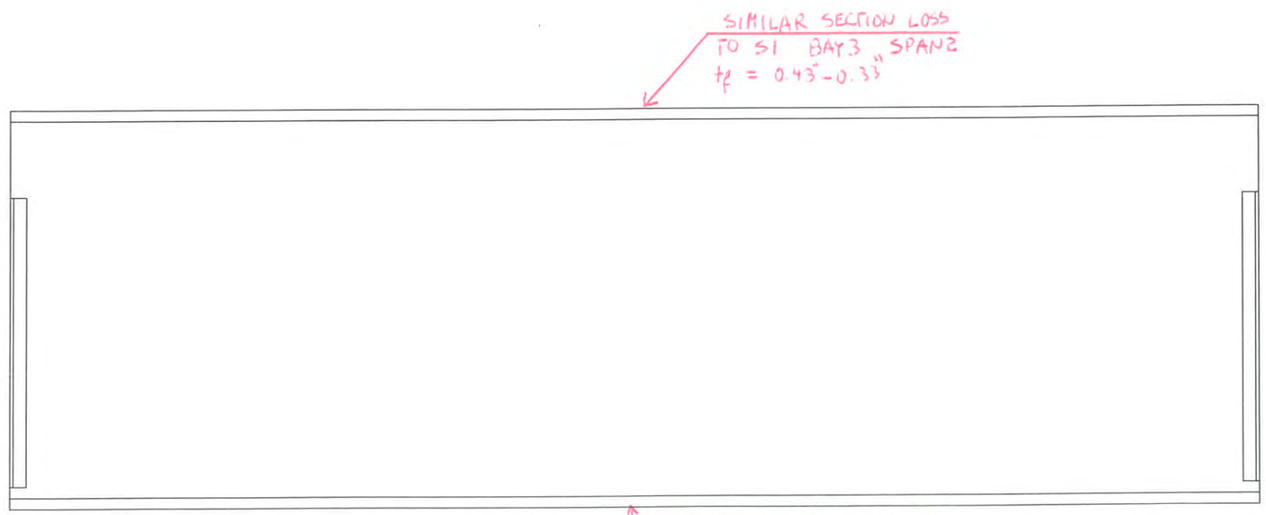

WEST ELEVATION
(LOOKING EAST)

Hoyle, Tanner Associates, Inc.
Consulting Engineers

150 Dow Street.
Manchester, NH 03101-1227
Tel 603-669-5555, Fax 603-669-4168
Web Page: www.hoyletanner.com
© Copyright 2009

SARAH LONG BRIDGE
SPAN 2 S1 CURB STRINGER BAY 2

INSPECTED BY: JB & EGW	DATE: 6-5-2003	SCALE: 3/8" = 1'-0" H 3/4" = 1'-0" V

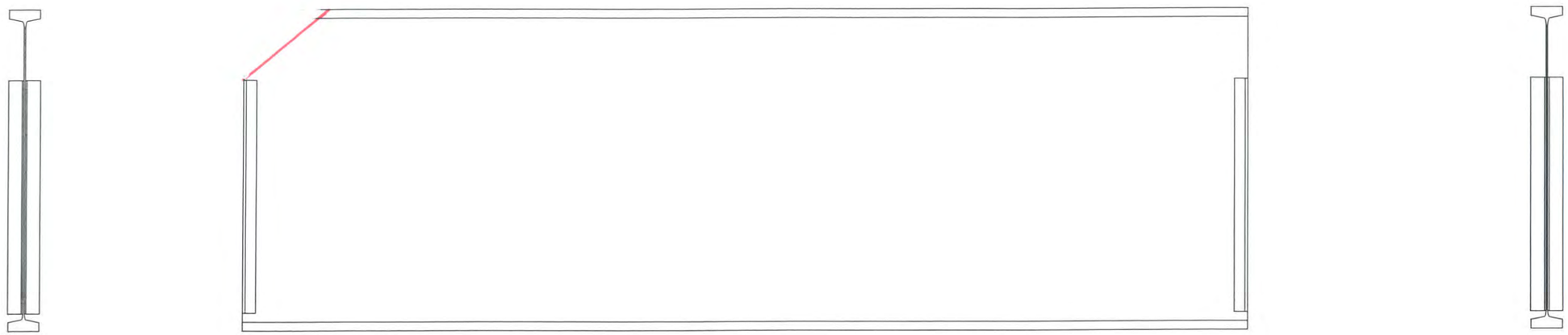

EAST ELEVATION
(LOOKING WEST)

WEST ELEVATION
(LOOKING EAST)

Hoyle, Tanner Associates, Inc.
Consulting Engineers
150 Dow Street.
Manchester, NH 03101–1227
Tel 603–669–5555, Fax 603–669–4168
Web Page: www.hoyletanner.com
© Copyright 2009

SARAH LONG BRIDGE
SPAN 2 S4 CURB STRINGER BAY 1

INSPECTED BY: JU	DATE: 5-29-2009	SCALE: 3/8" = 1'–0" H
℄ EGW		3/4" = 1'–0" V

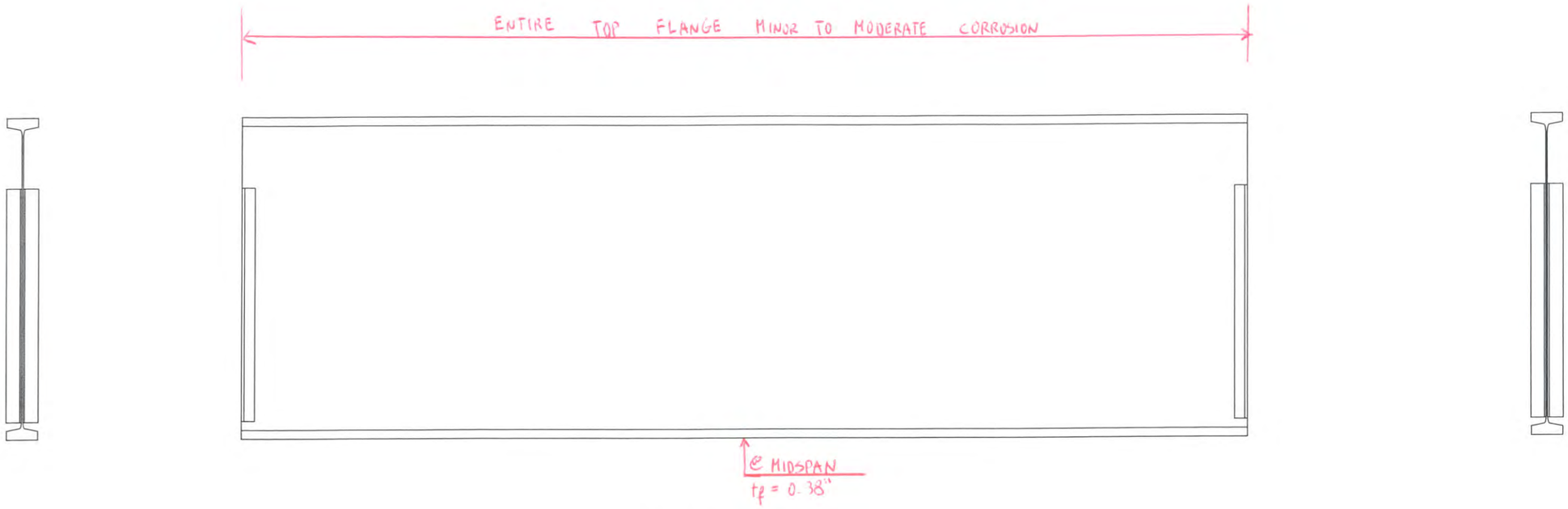

EAST ELEVATION
(LOOKING WEST)

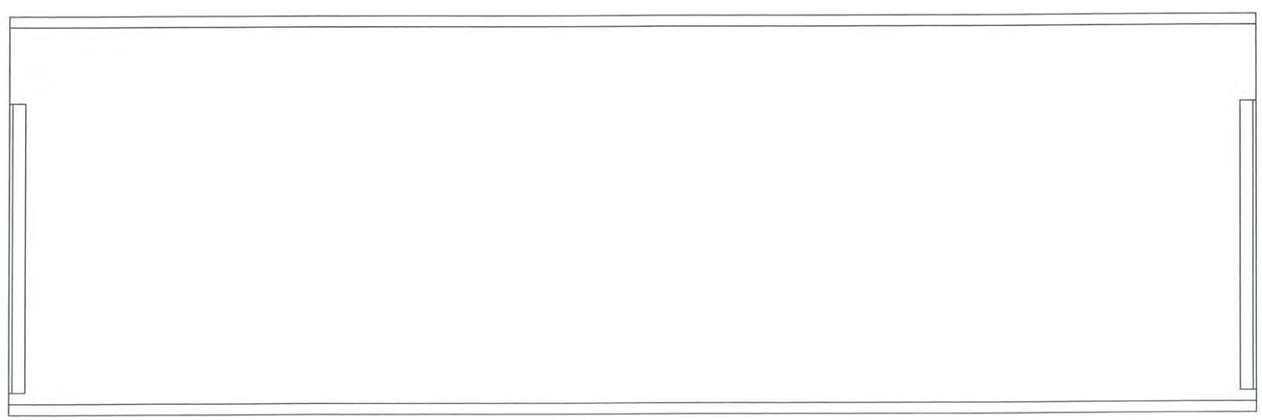

WEST ELEVATION
(LOOKING EAST)

Hoyle, Tanner Associates, Inc.
Consulting Engineers

150 Dow Street.
Manchester, NH 03101–1227
Tel 603–669–5555, Fax 603–669–4168
Web Page: www.hoyletanner.com
© Copyright 2009

SARAH LONG BRIDGE
SPAN 3 S1 CURB STRINGER BAY 1

INSPECTED BY: JB	DATE: 6-5-2009	SCALE: ⅜" = 1'–0" H
& EGW		¾" = 1'–0" V

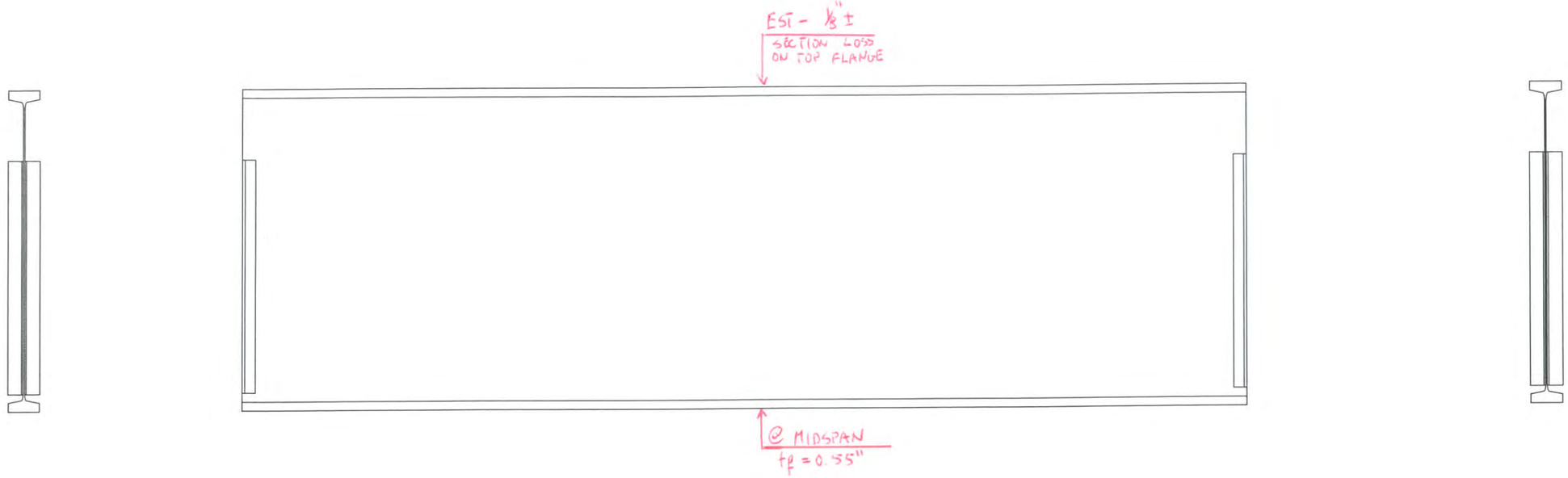

EAST ELEVATION
(LOOKING WEST)

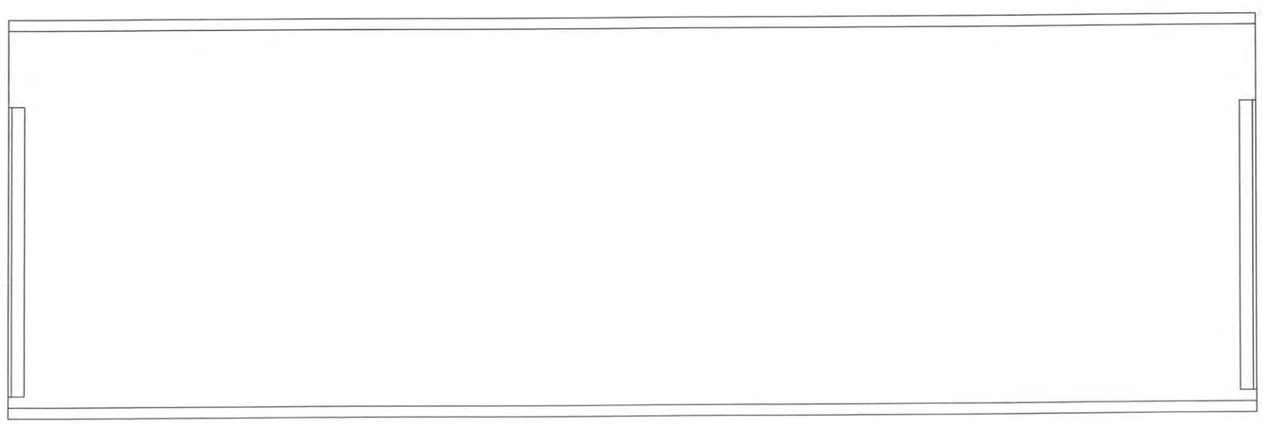

WEST ELEVATION
(LOOKING EAST)

Hoyle, Tanner Associates, Inc.
Consulting Engineers

150 Dow Street.
Manchester, NH 03101-1227
Tel 603-669-5555, Fax 603-669-4168
Web Page: www.hoyletanner.com
© Copyright 2009

SARAH LONG BRIDGE
SPAN 3 S4 CURB STRINGER BAY 3

INSPECTED BY: JB & EGW	DATE: 5-29-2009	SCALE: 3/8" = 1'-0" H 3/4" = 1'-0" V

EAST ELEVATION
(LOOKING WEST)

WEST ELEVATION
(LOOKING EAST)

Hoyle, Tanner Associates, Inc.
Consulting Engineers

150 Dow Street
Manchester, NH 03101-1227
Tel 603-669-5555, Fax 603-669-4168
Web Page: www.hoyletanner.com
© Copyright 2009

SARAH LONG BRIDGE
SPAN 4 S1 CURB STRINGER BAY 3

INSPECTED BY: JB & EGW	DATE: 6-5-2003	SCALE: 3/8" = 1'-0" H 3/4" = 1'-0" V

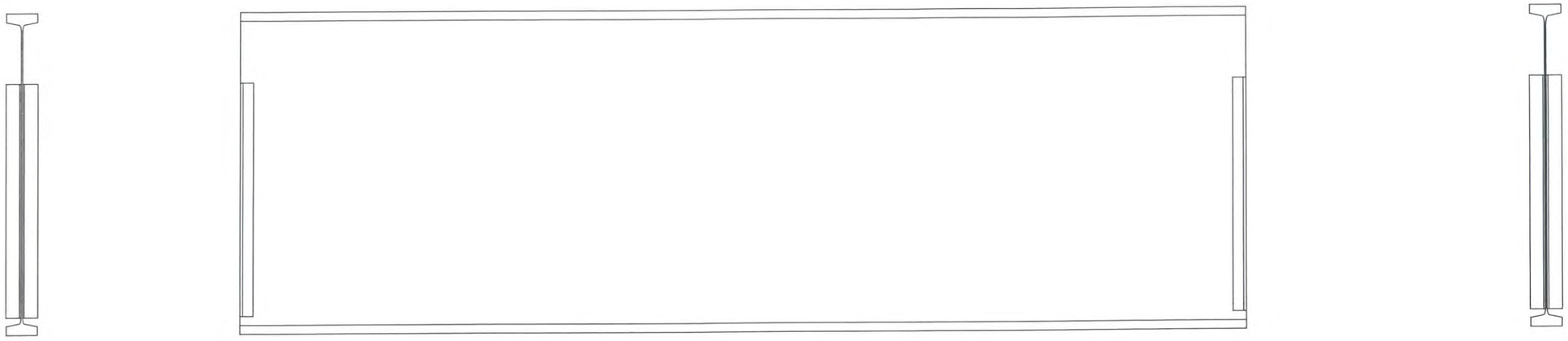

EAST ELEVATION
(LOOKING WEST)

WEST ELEVATION
(LOOKING EAST)

Hoyle, Tanner Associates, Inc.
Consulting Engineers
150 Dow Street.
Manchester, NH 03101-1227
Tel 603-669-5555, Fax 603-669-4168
Web Page: www.hoyletanner.com
© Copyright 2009

SARAH LONG BRIDGE
SPAN 4 S1 CURB STRINGER BAY 1

INSPECTED BY: JB	DATE: 5-29-2009	SCALE: 3/8" = 1'-0" H
& EGW		3/4" = 1'-0" V

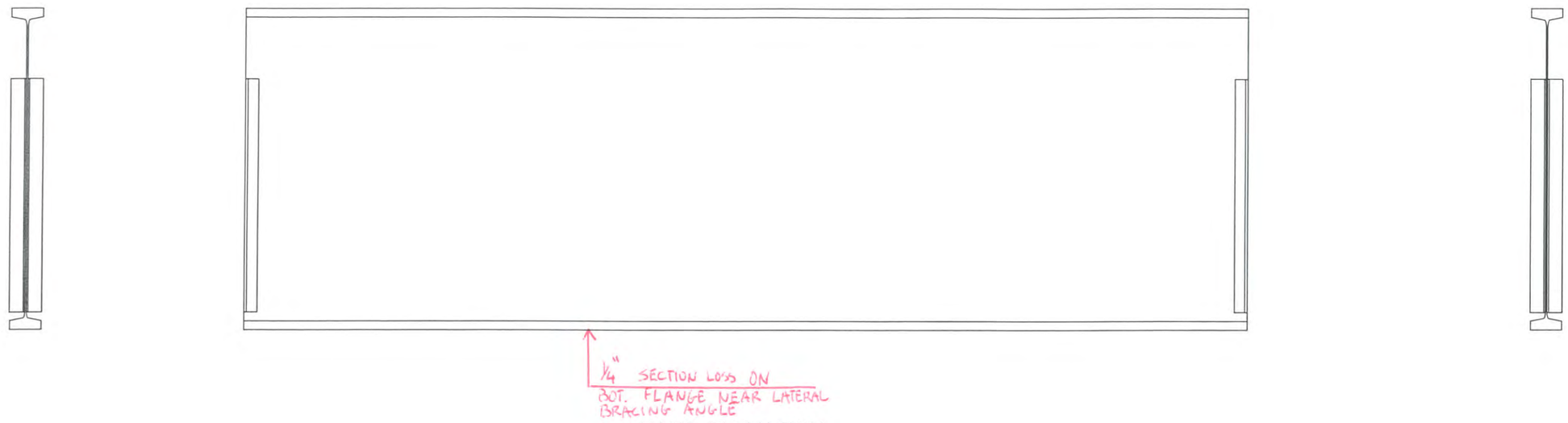

EAST ELEVATION
(LOOKING WEST)

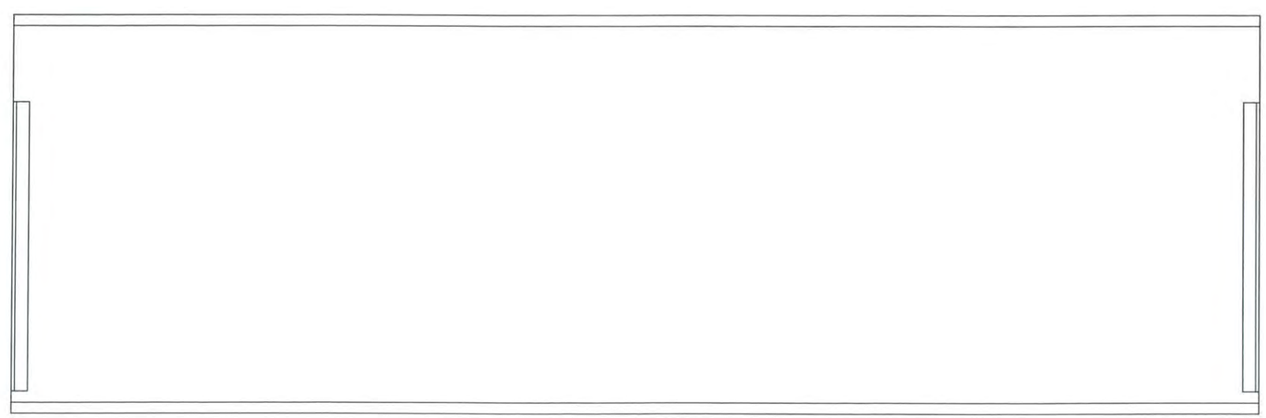

WEST ELEVATION
(LOOKING EAST)

Hoyle, Tanner Associates, Inc.
Consulting Engineers
150 Dow Street.
Manchester, NH 03101-1227
Tel 603-669-5555, Fax 603-669-4168
Web Page: www.hoyletanner.com
© Copyright 2009

SARAH LONG BRIDGE
SPAN 4 S3 ROADWAY STRINGER BAY 3

INSPECTED BY: JB	DATE: 5-29-2009	SCALE: 3/8" = 1'-0" H
& EGW		3/4" = 1'-0" V

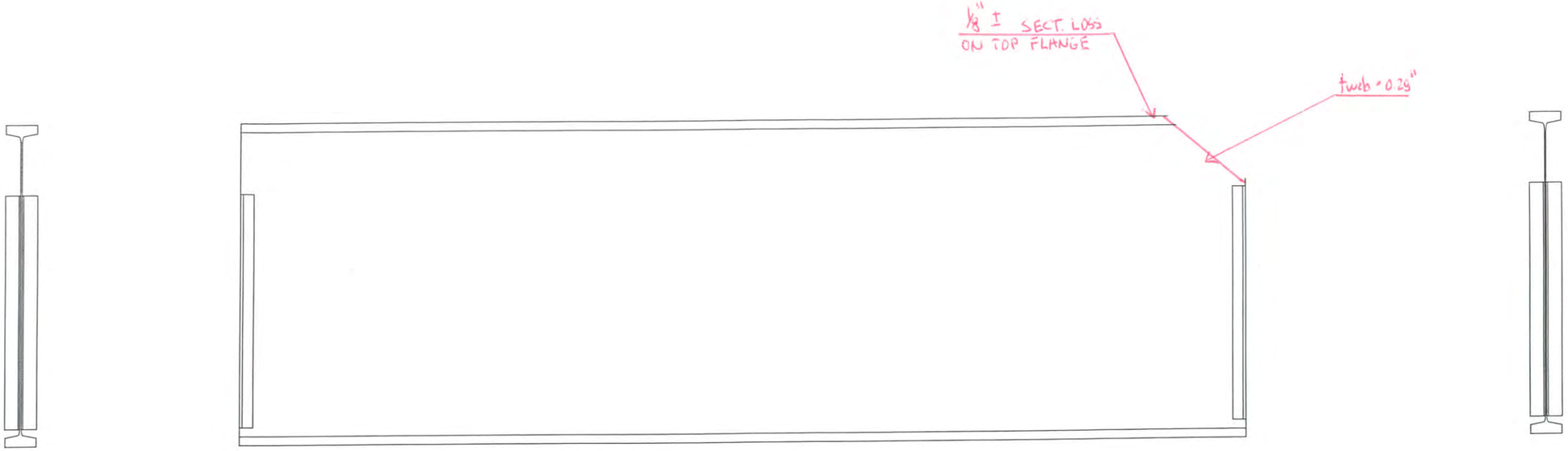

EAST ELEVATION
(LOOKING WEST)

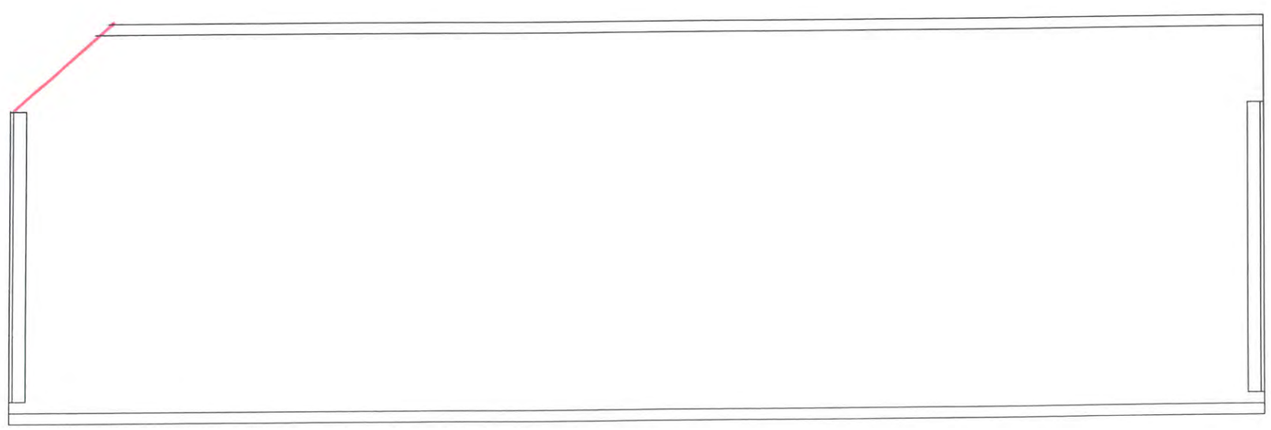

WEST ELEVATION
(LOOKING EAST)

Hoyle, Tanner Associates, Inc.
Consulting Engineers

150 Dow Street,
Manchester, NH 03101-1227
Tel 603-669-5555, Fax 603-669-4168
Web Page: www.hoyletanner.com
© Copyright 2009

SARAH LONG BRIDGE
SPAN 4 S4 CURB STRINGER BAY 1

INSPECTED BY: JAB & EGW	DATE: 5-29-2009	SCALE: 3/8" = 1'-0" H 3/4" = 1'-0" V

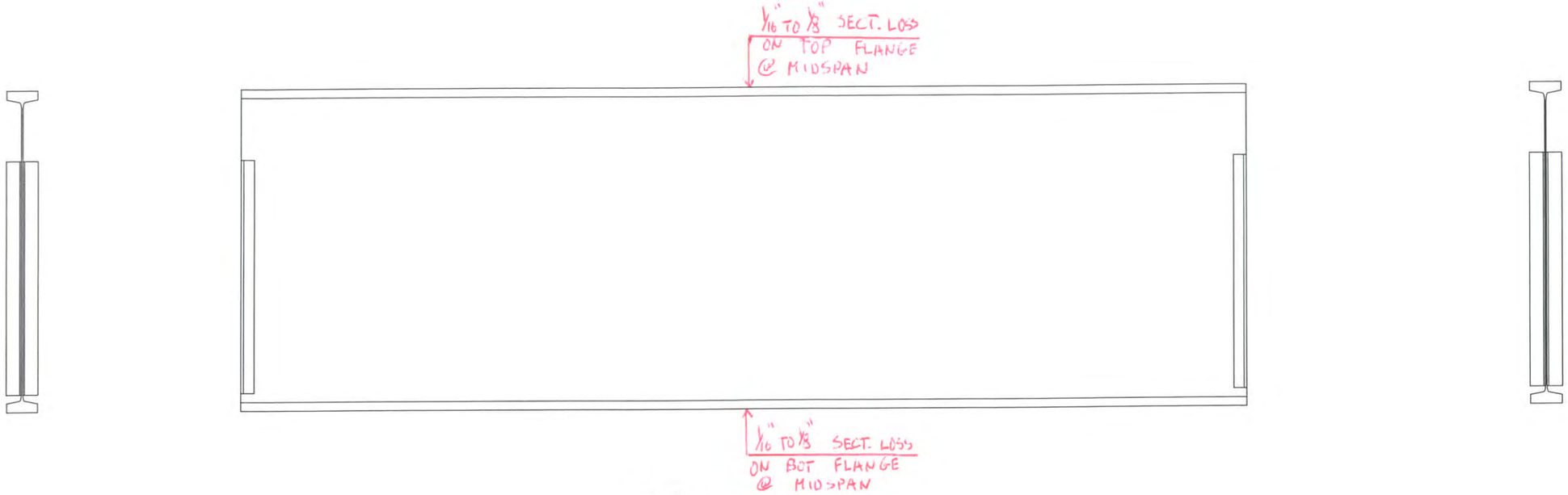

EAST ELEVATION
(LOOKING WEST)

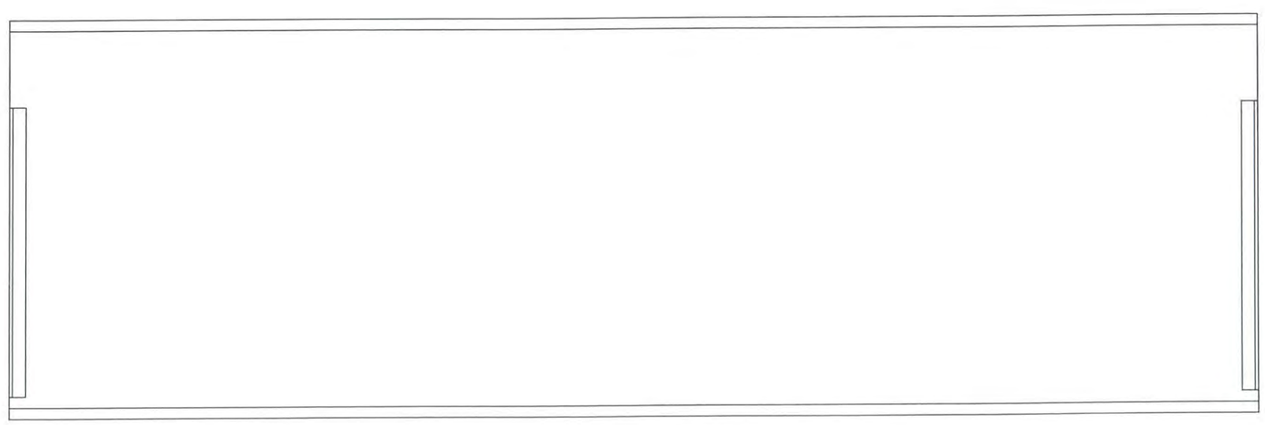

WEST ELEVATION
(LOOKING EAST)

Hoyle, Tanner Associates, Inc.
Consulting Engineers
150 Dow Street.
Manchester, NH 03101-1227
Tel 603-669-5555, Fax 603-669-4168
Web Page: www.hoyletanner.com
© Copyright 2009

SARAH LONG BRIDGE
SPAN 4 S4 CURB STRINGER BAY 3

INSPECTED BY: JB	DATE: 5-29-2009	SCALE: 3/8" = 1'-0" H
& EGW		3/4" = 1'-0" V

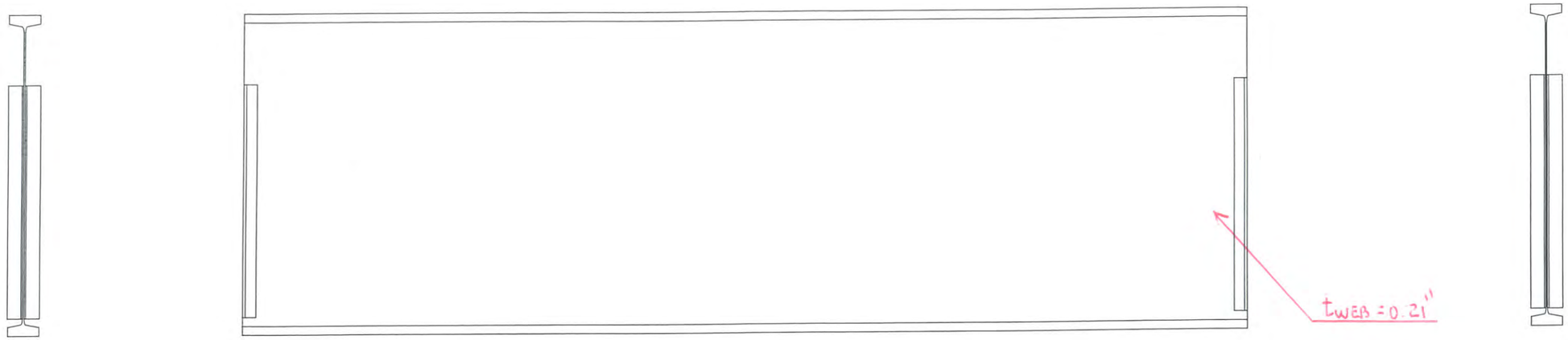

EAST ELEVATION
(LOOKING WEST)

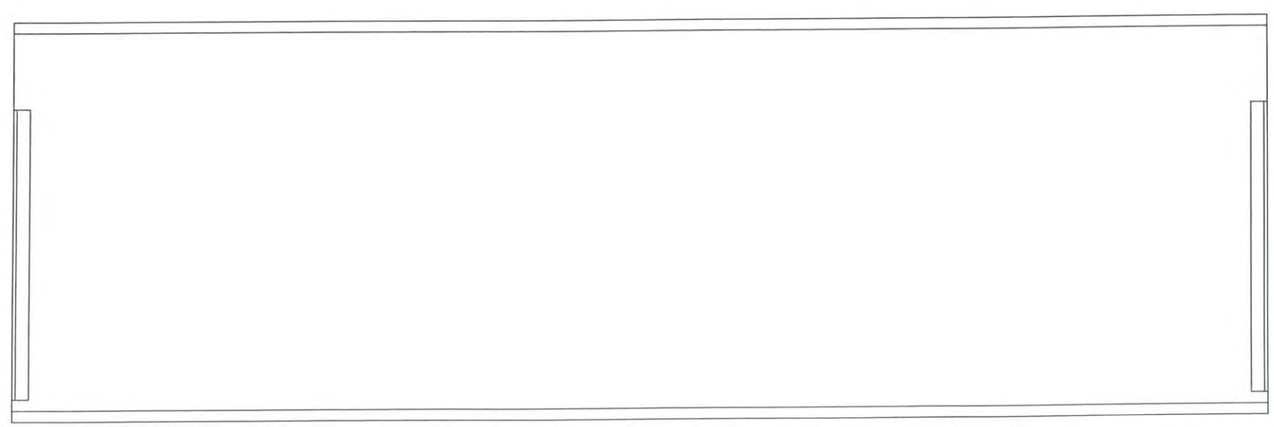

WEST ELEVATION
(LOOKING EAST)

Hoyle, Tanner Associates, Inc.
Consulting Engineers

150 Dow Street.
Manchester, NH 03101-1227
Tel 603-669-5555, Fax 603-669-4168
Web Page: www.hoyletanner.com
© Copyright 2009

SARAH LONG BRIDGE

SPAN ~~5~~ 54 CURB STRINGER BAY 3

INSPECTED BY: JB & EGW	DATE: 5-29-2009	SCALE: ⅜" = 1'-0" H ¾" = 1'-0" V

EAST ELEVATION
(LOOKING WEST)

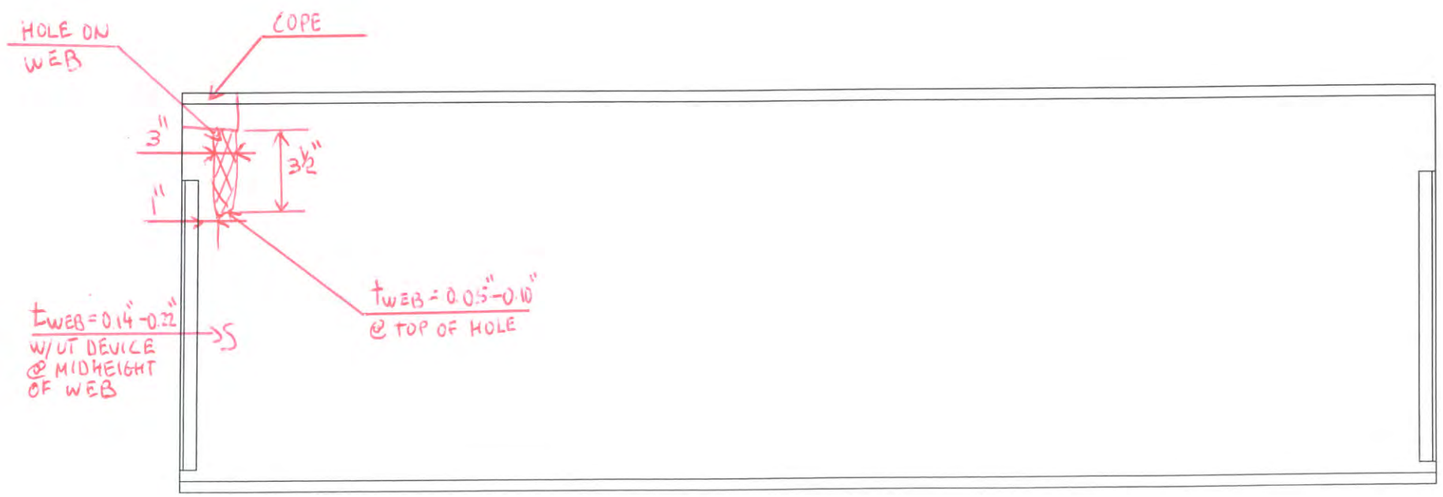

WEST ELEVATION
(LOOKING EAST)

Hoyle, Tanner Associates, Inc.
Consulting Engineers
150 Dow Street,
Manchester, NH 03101–1227
Tel 603–669–5555, Fax 603–669–4168
Web Page: www.hoyletanner.com
© Copyright 2009

SARAH LONG BRIDGE
SPAN 6 S1 CURB STRINGER BAY 3

INSPECTED BY: JTB	DATE:	SCALE: ⅜" = 1'–0" H
‡ EGW		¾" = 1'–0" V

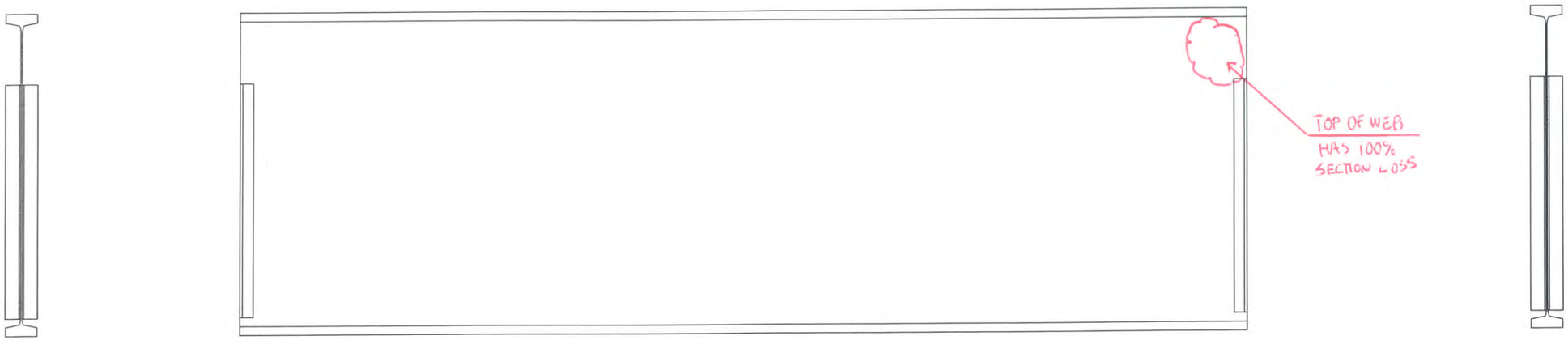

EAST ELEVATION
(LOOKING WEST)

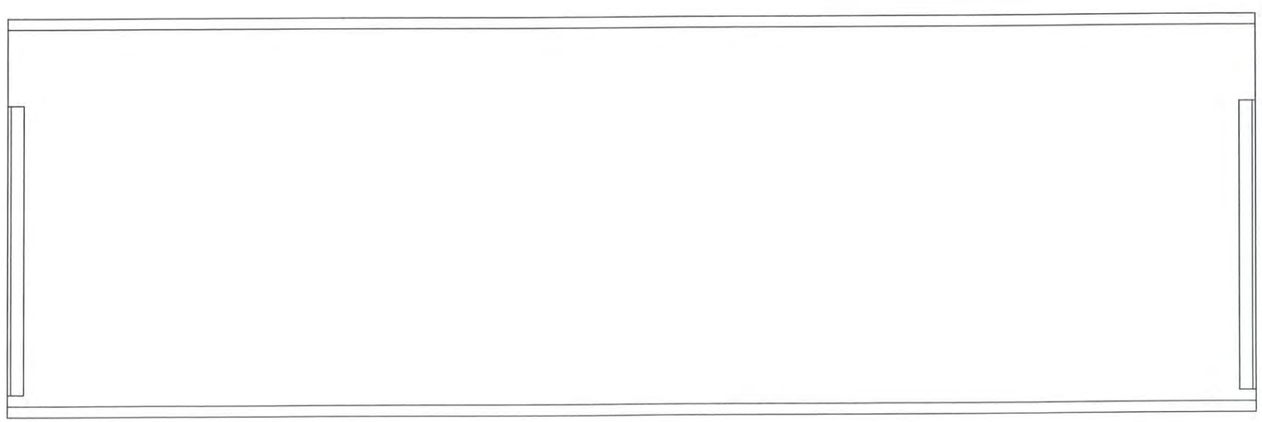

WEST ELEVATION
(LOOKING EAST)

Hoyle, Tanner Associates, Inc.
Consulting Engineers

150 Dow Street.
Manchester, NH 03101-1227
Tel 603-669-5555, Fax 603-669-4168
Web Page: www.hoyletanner.com
© Copyright 2009

SARAH LONG BRIDGE
SPAN 6 S2 ROADWAY STRINGER BAY 3

INSPECTED BY: JB & EGW	DATE: 5-29-2009	SCALE: 3/8" = 1'-0" H 3/4" = 1'-0" V

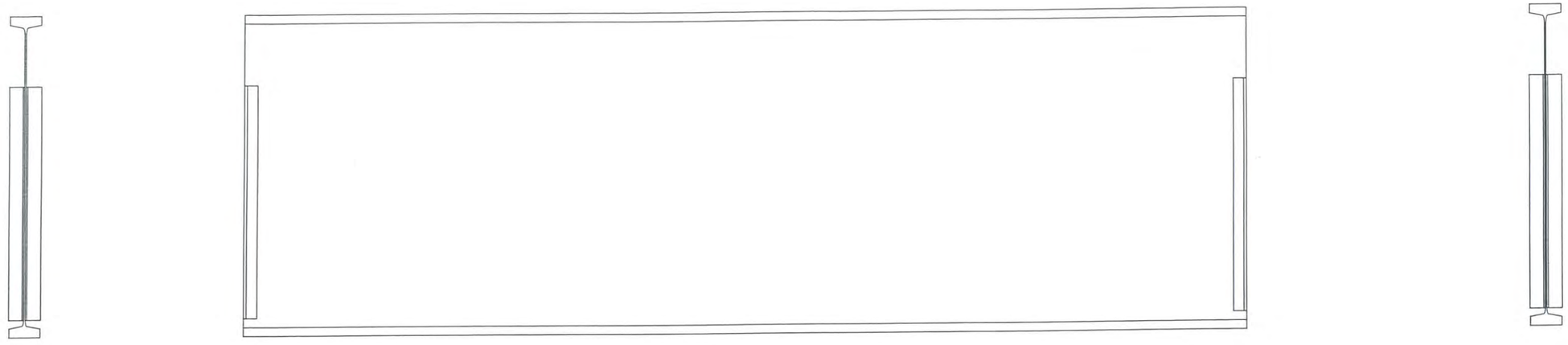

EAST ELEVATION
(LOOKING WEST)

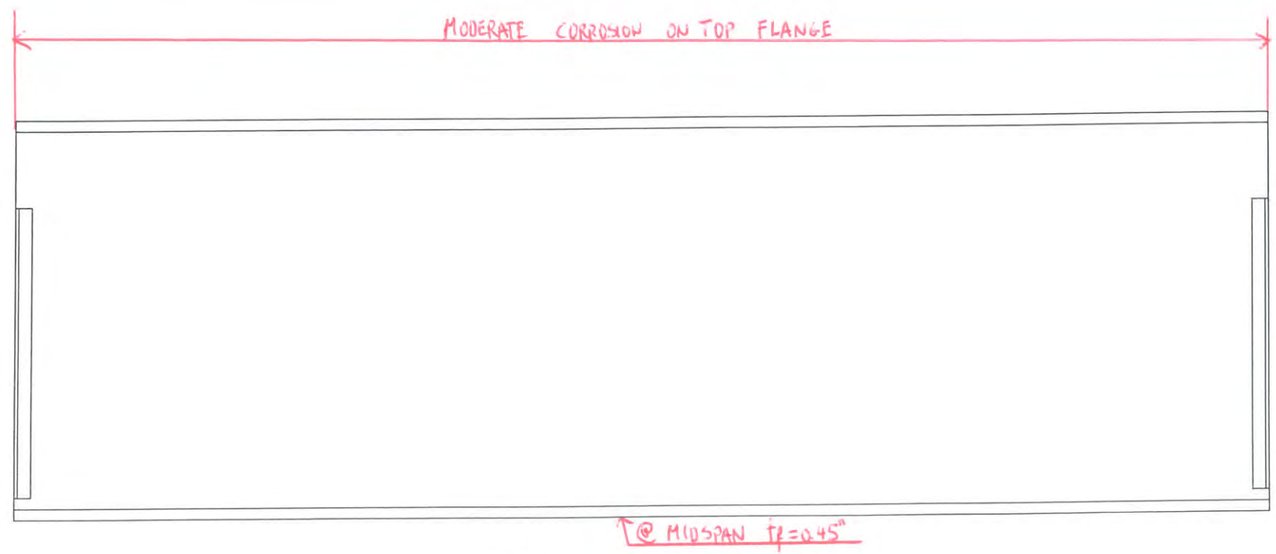

WEST ELEVATION
(LOOKING EAST)

Hoyle, Tanner Associates, Inc.
Consulting Engineers
150 Dow Street.
Manchester, NH 03101-1227
Tel 603-669-5555, Fax 603-669-4168
Web Page: www.hoyletanner.com
© Copyright 2009

SARAH LONG BRIDGE
SPAN 6 S4 CURB STRINGER BAY 2

INSPECTED BY: JB	DATE:	SCALE: 3/8" = 1'-0" H
EGW		3/4" = 1'-0" V

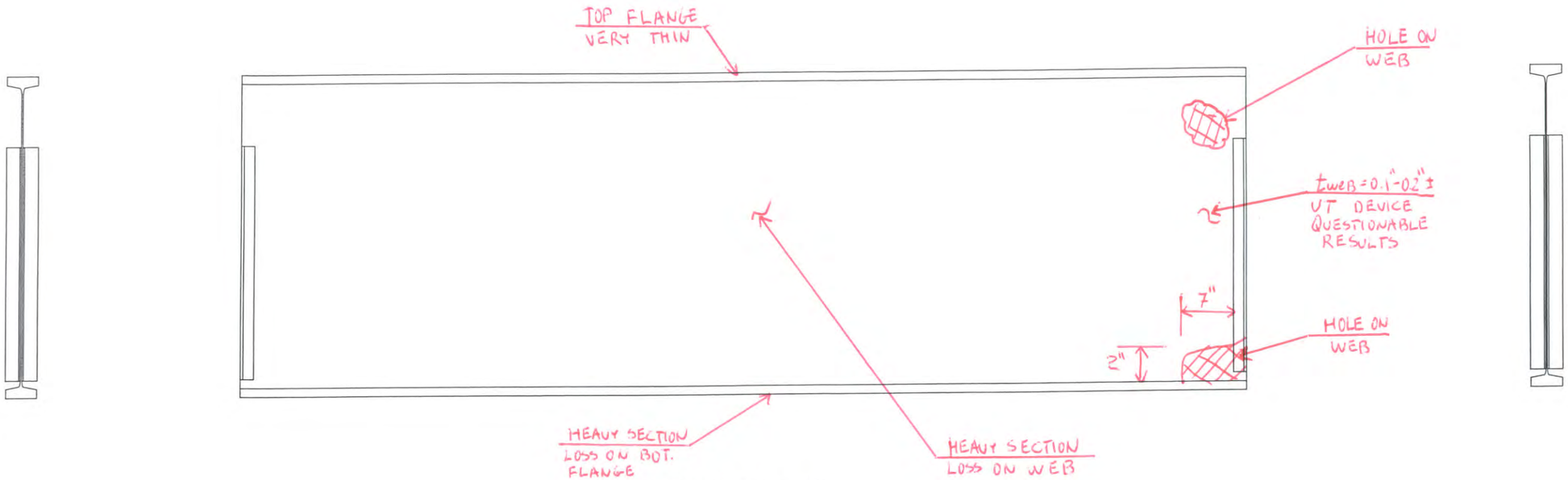

EAST ELEVATION
(LOOKING WEST)

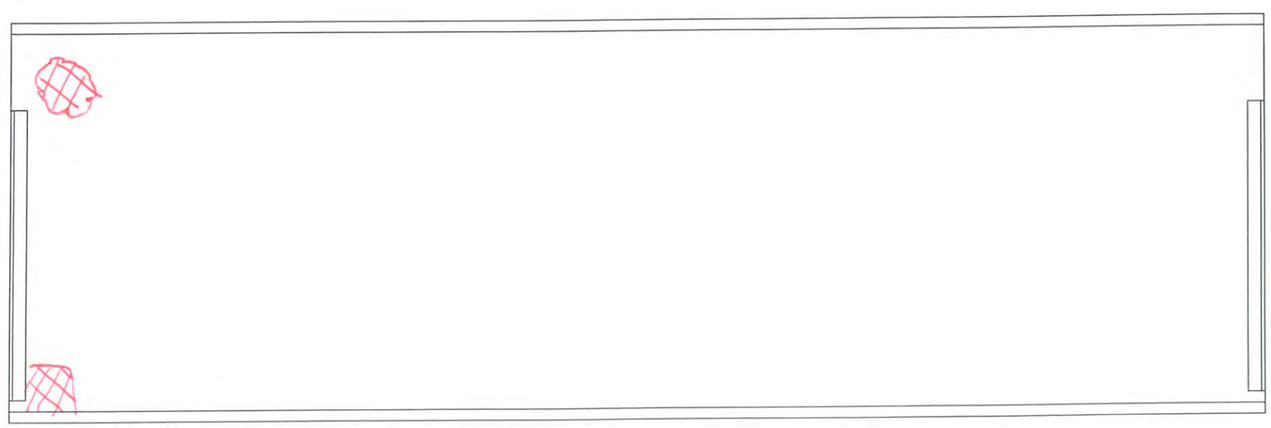

WEST ELEVATION
(LOOKING EAST)

Hoyle, Tanner Associates, Inc.
Consulting Engineers

150 Dow Street
Manchester, NH 03101-1227
Tel 603-669-5555, Fax 603-669-4168
Web Page: www.hoyletanner.com
© Copyright 2009

SARAH LONG BRIDGE
SPAN 6 S4 CURB STRINGER BAY 3

INSPECTED BY: JB & EGW	DATE:	SCALE: 3/8" = 1'-0" H 3/4" = 1'-0" V

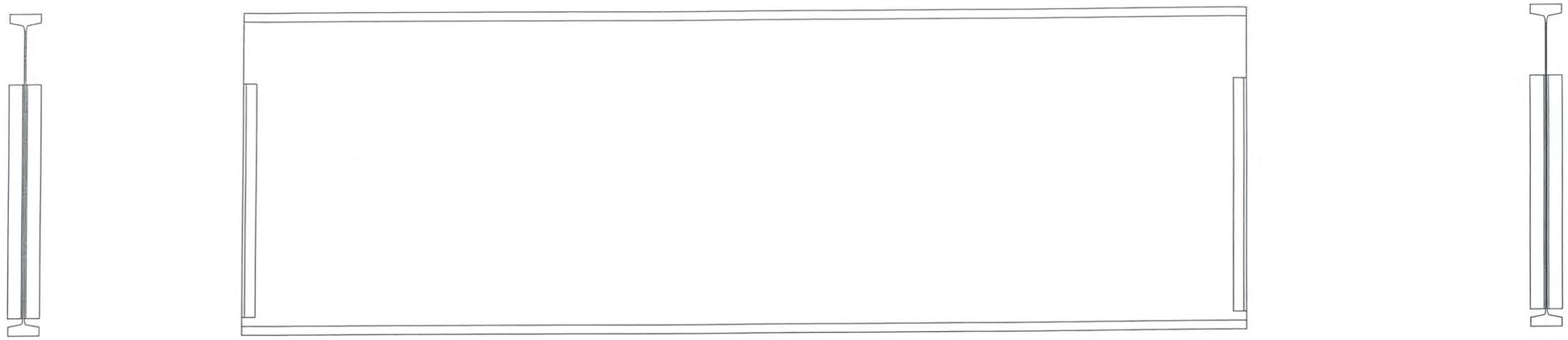

EAST ELEVATION
(LOOKING WEST)

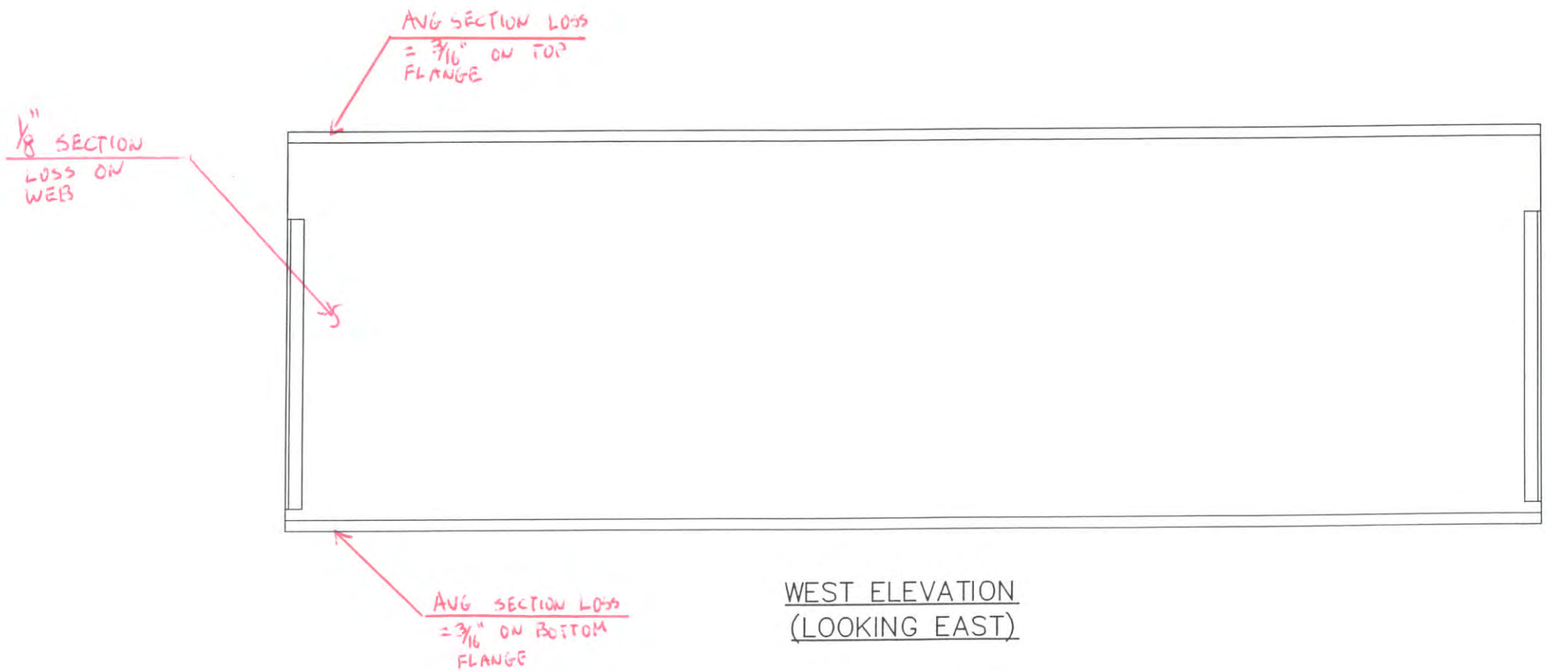

WEST ELEVATION
(LOOKING EAST)

Hoyle, Tanner Associates, Inc.
Consulting Engineers
150 Dow Street.
Manchester, NH 03101-1227
Tel 603-669-5555, Fax 603-669-4168
Web Page: www.hoyletanner.com
© Copyright 2009

SARAH LONG BRIDGE
SPAN 7 S1 CURB STRINGER BAY 3

INSPECTED BY: JB	DATE:	SCALE: 3/8" = 1'-0" H
& EGW		3/4" = 1'-0" V

EAST ELEVATION
(LOOKING WEST)

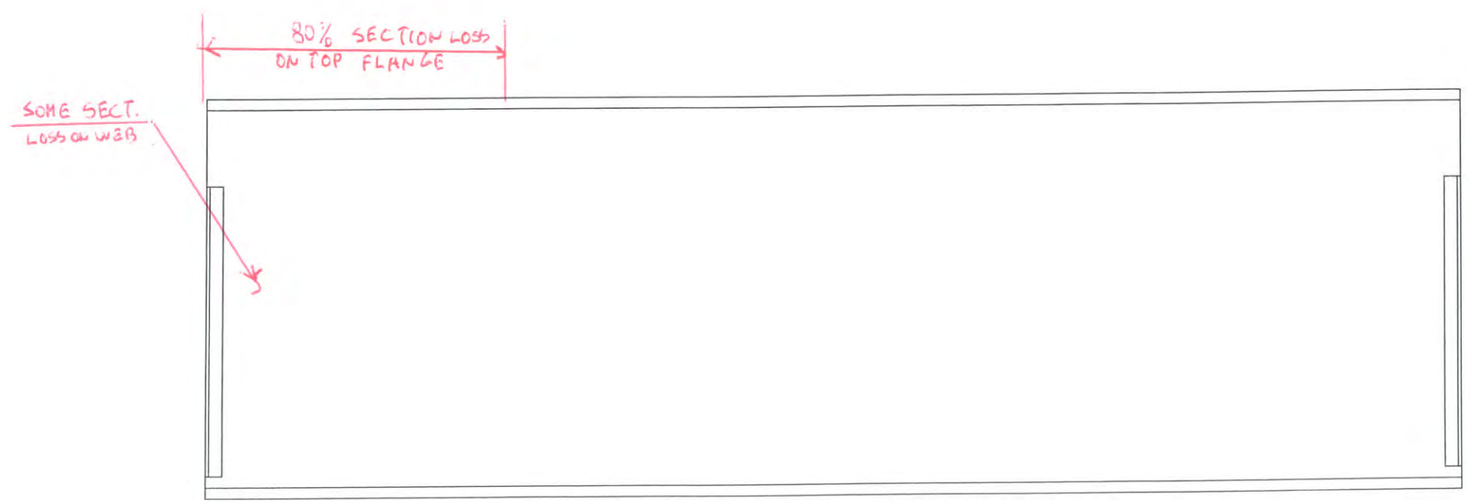

WEST ELEVATION
(LOOKING EAST)

Hoyle, Tanner Associates, Inc.
Consulting Engineers
150 Dow Street.
Manchester, NH 03101-1227
Tel 603-669-5555, Fax 603-669-4168
Web Page: www.hoyletanner.com
© Copyright 2009

SARAH LONG BRIDGE
SPAN 8 S1 CURB STRINGER BAY 3

INSPECTED BY: JB & EGW	DATE: 6-3-2009	SCALE: 3/8" = 1'-0" H 3/4" = 1'-0" V

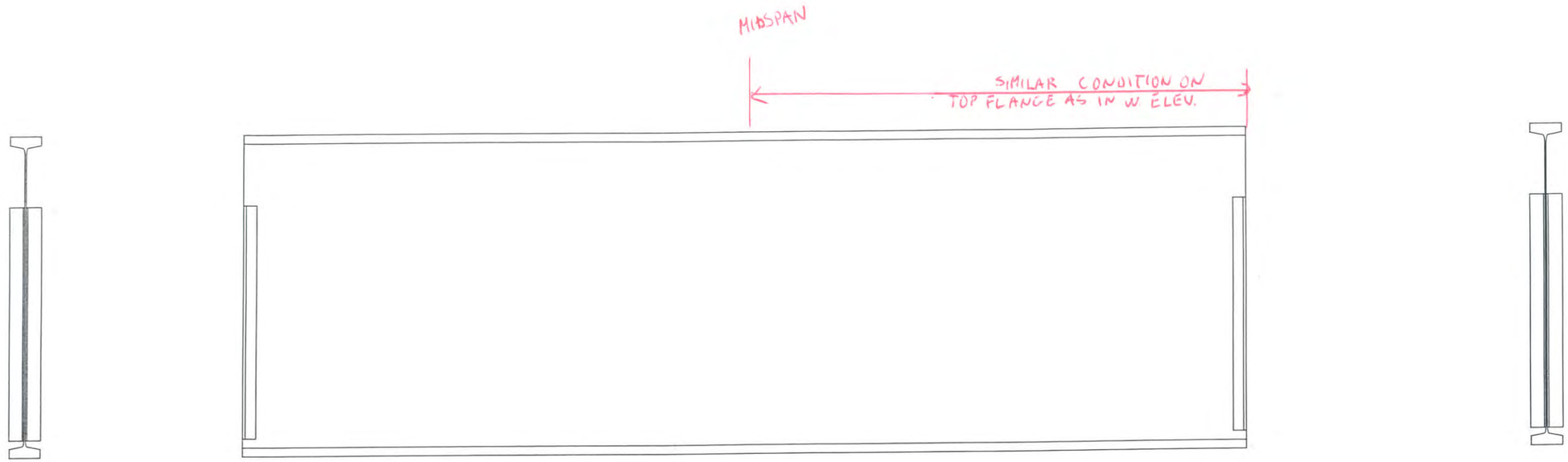

EAST ELEVATION
(LOOKING WEST)

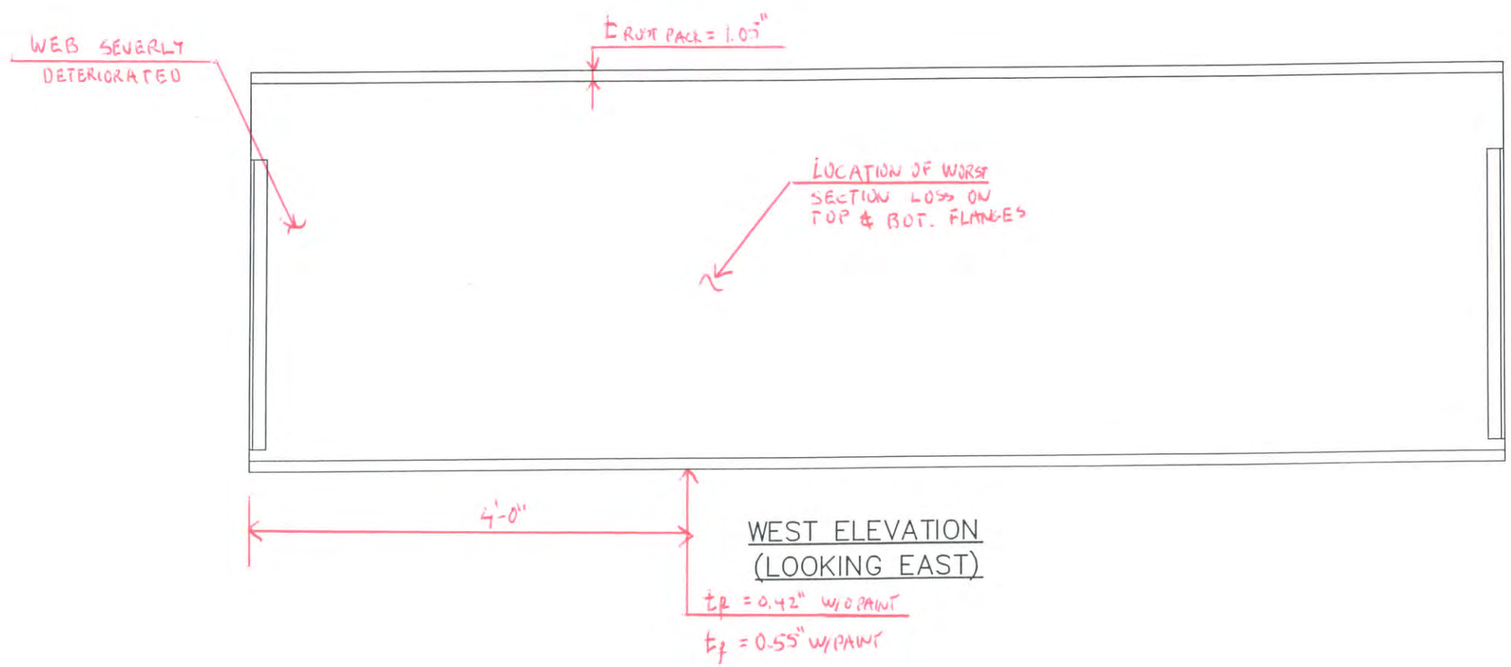

WEST ELEVATION
(LOOKING EAST)

Hoyle, Tanner Associates, Inc.
Consulting Engineers
150 Dow Street,
Manchester, NH 03101-1227
Tel 603-669-5555, Fax 603-669-4168
Web Page: www.hoyletanner.com
© Copyright 2009

SARAH LONG BRIDGE
SPAN 8 S4 CURB STRINGER BAY 3

INSPECTED BY: JB & EGW	DATE: 6-2-2003	SCALE: 3/8" = 1'-0" H 3/4" = 1'-0" V

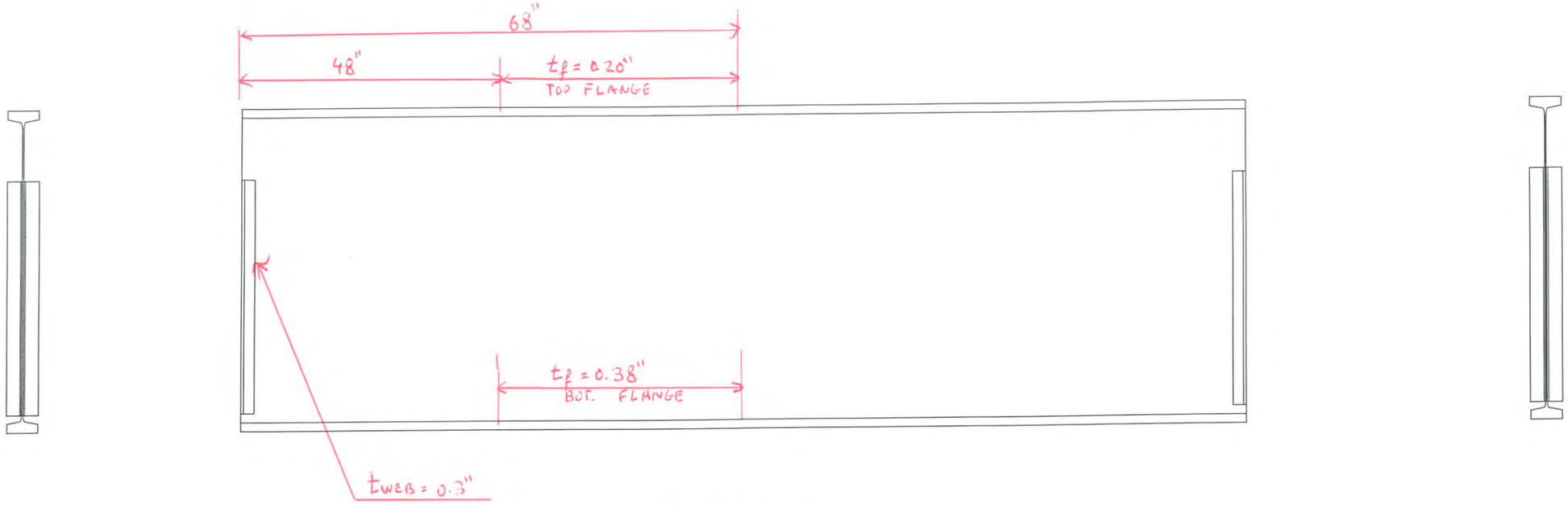

EAST ELEVATION
(LOOKING WEST)

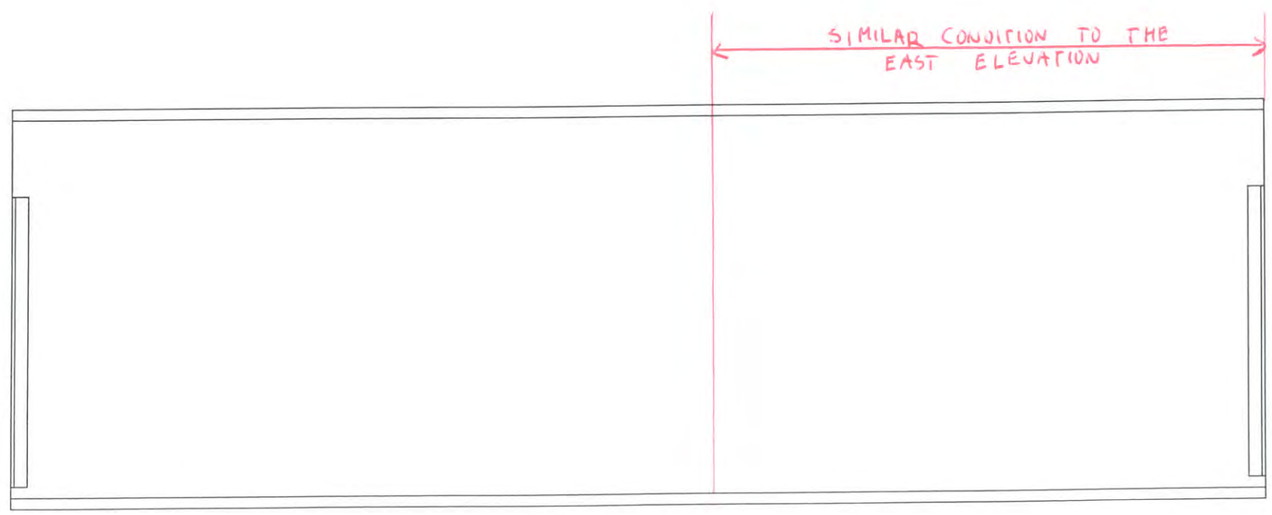

WEST ELEVATION
(LOOKING EAST)

Hoyle, Tanner Associates, Inc.
Consulting Engineers

150 Dow Street.
Manchester, NH 03101-1227
Tel 603-669-5555, Fax 603-669-4168
Web Page: www.hoyletanner.com
© Copyright 2009

SARAH LONG BRIDGE
SPAN 9 S1 CURB STRINGER BAY 1

INSPECTED BY: JB	DATE:	SCALE: 3/8" = 1'-0" H
JEGW		3/4" = 1'-0" V

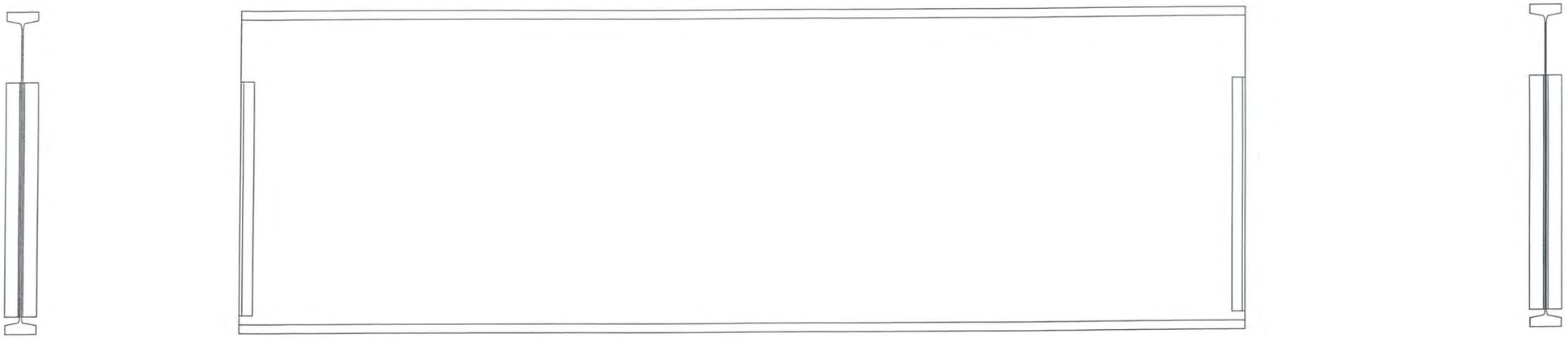

EAST ELEVATION
(LOOKING WEST)

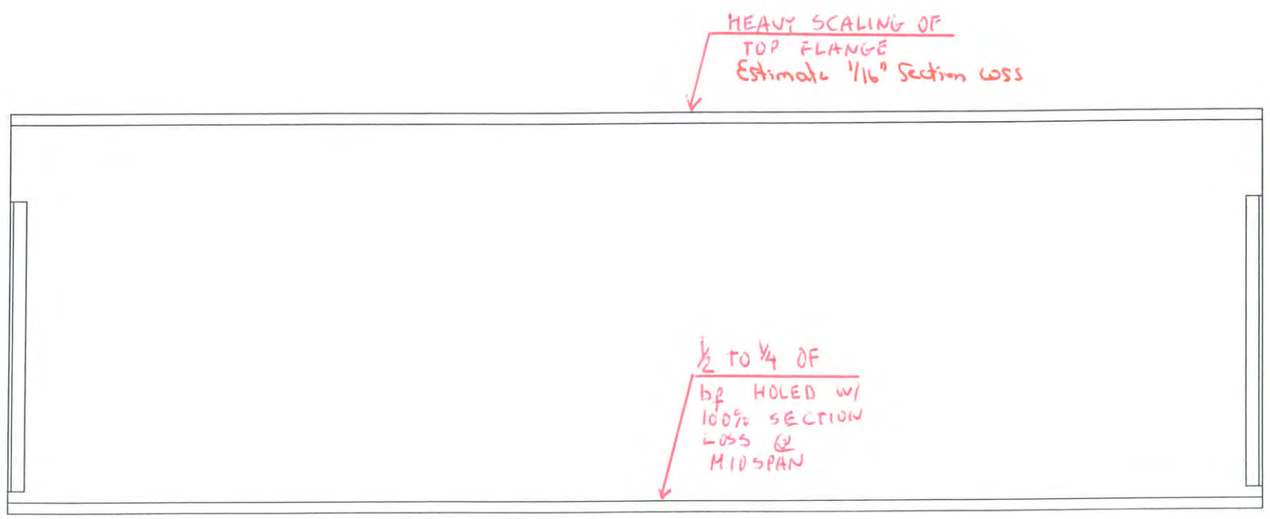

WEST ELEVATION
(LOOKING EAST)

Hoyle, Tanner Associates, Inc.
Consulting Engineers

150 Dow Street.
Manchester, NH 03101-1227
Tel 603-669-5555, Fax 603-669-4168
Web Page: www.hoyletanner.com
© Copyright 2009

SARAH LONG BRIDGE
SPAN 9 S4 CURB STRINGER BAY1

INSPECTED BY: JB & EGW	DATE: 6-1-2009	SCALE: ⅜" = 1'-0" H ¾" = 1'-0" V

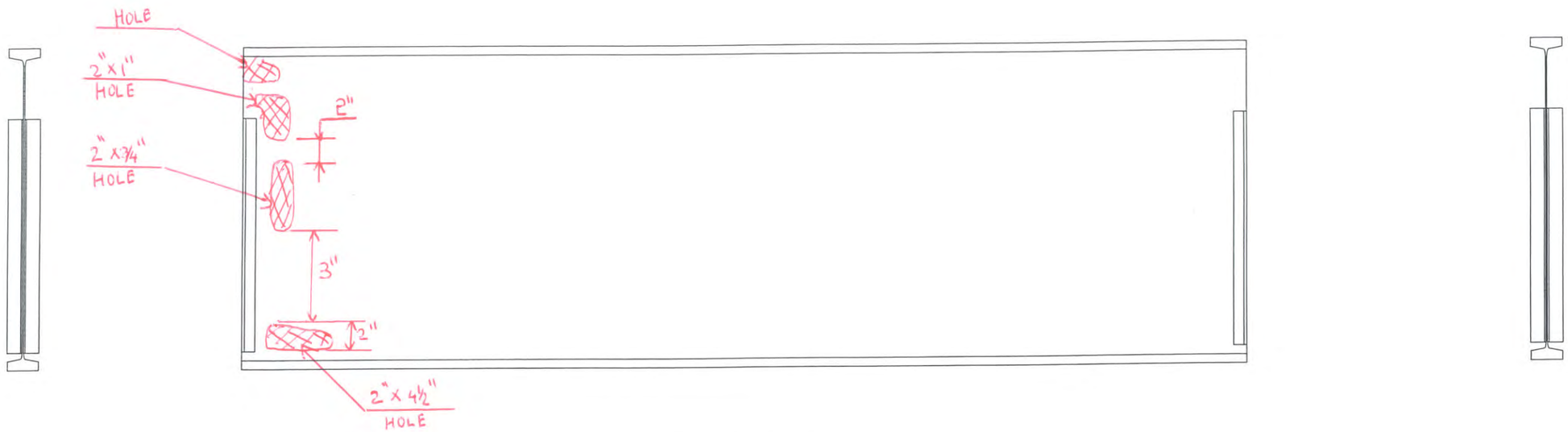

EAST ELEVATION
(LOOKING WEST)

WEST ELEVATION
(LOOKING EAST)

Hoyle, Tanner Associates, Inc.
Consulting Engineers

150 Dow Street.
Manchester, NH 03101-1227
Tel 603-669-5555, Fax 603-669-4168
Web Page: www.hoyletanner.com
© Copyright 2009

SARAH LONG BRIDGE

SPAN 10 SI CURB STRINGER BAY 3

INSPECTED BY: JB & EGW	DATE: 6-3-2009	SCALE: ⅜" = 1'-0" H ¾" = 1'-0" V

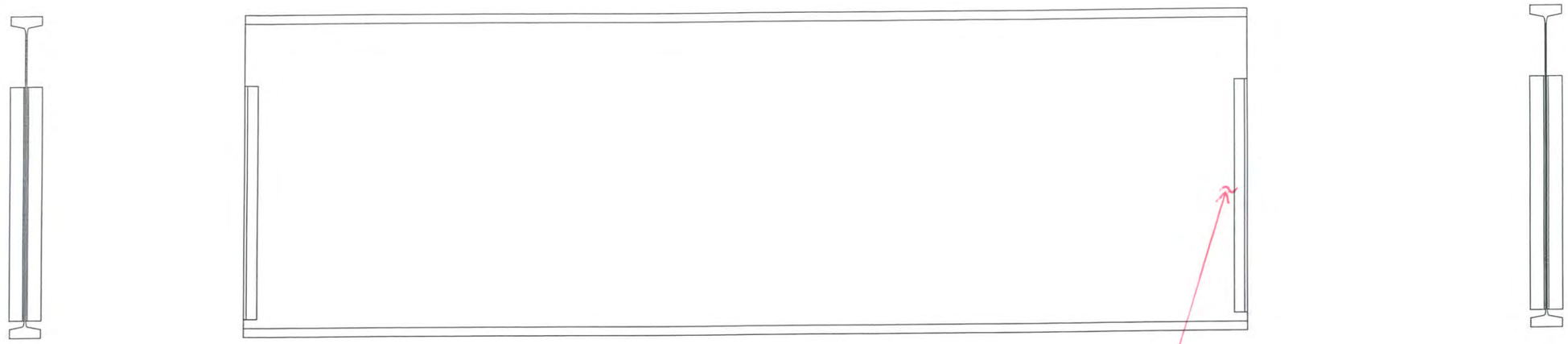

EAST ELEVATION
(LOOKING WEST)

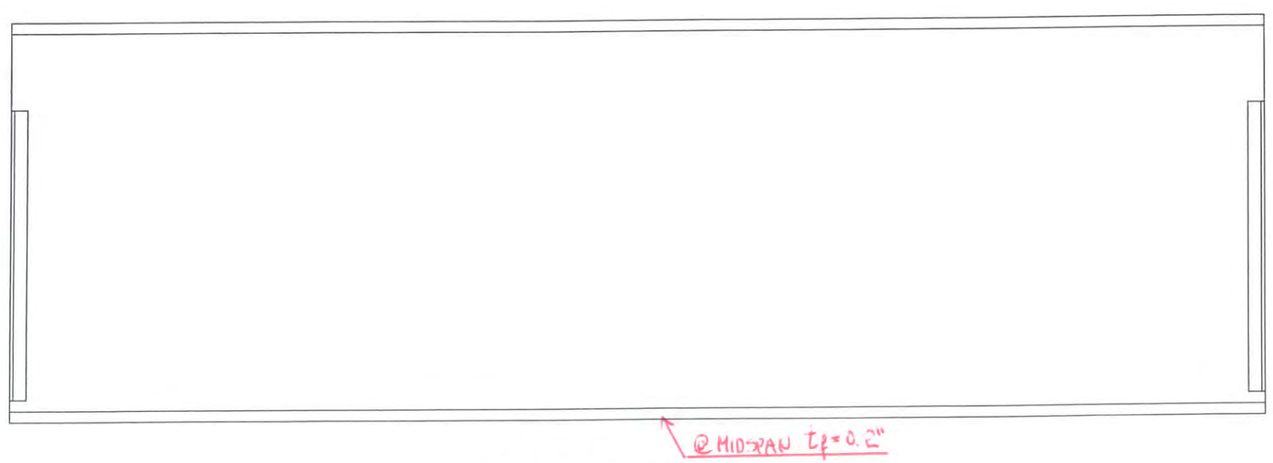

WEST ELEVATION
(LOOKING EAST)

Hoyle, Tanner Associates, Inc.
Consulting Engineers
150 Dow Street.
Manchester, NH 03101-1227
Tel 603-669-5555, Fax 603-669-4168
Web Page: www.hoyletanner.com
© Copyright 2009

SARAH LONG BRIDGE

SPAN 11 S4 CURB STRINGER BAY 3

INSPECTED BY: JB	DATE: 6-1-2004	SCALE: 3/8" = 1'-0" H
& EGW		3/4" = 1'-0" V

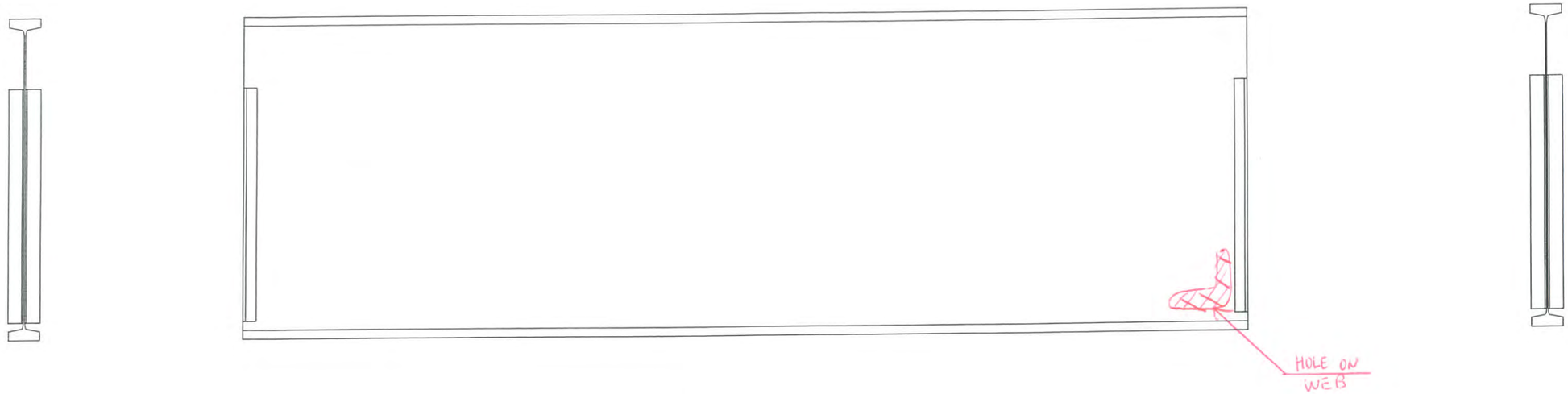

EAST ELEVATION
(LOOKING WEST)

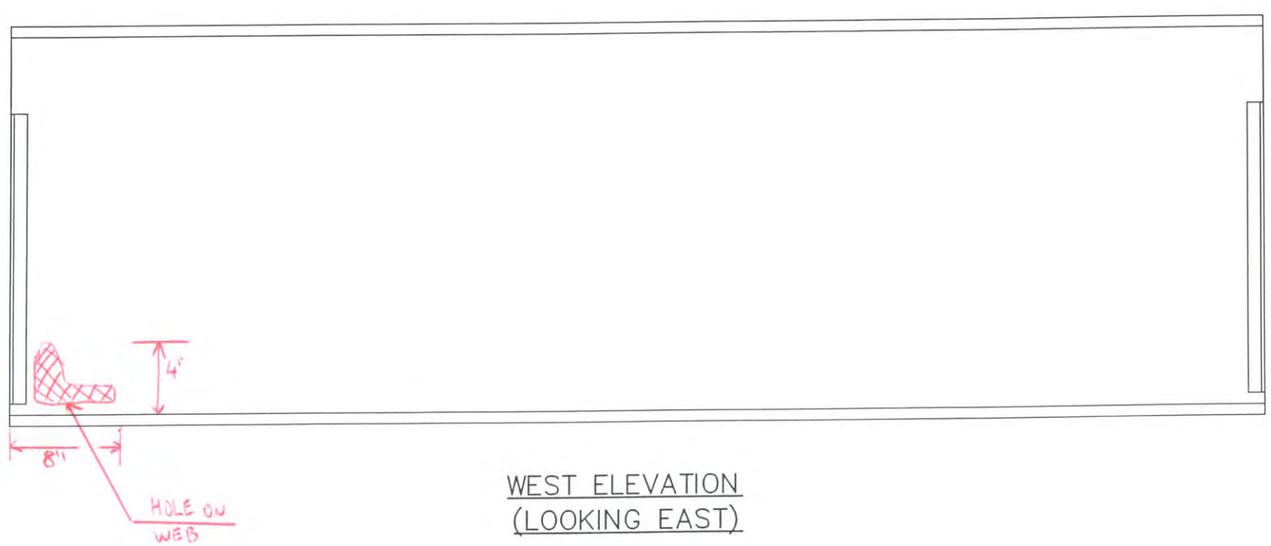

WEST ELEVATION
(LOOKING EAST)

Hoyle, Tanner Associates, Inc.
Consulting Engineers
150 Dow Street.
Manchester, NH 03101-1227
Tel 603-669-5555, Fax 603-669-4168
Web Page: www.hoyletanner.com
© Copyright 2009

SARAH LONG BRIDGE
SPAN 12 S4 CURB STRINGER BAY 3

INSPECTED BY: JB	DATE: 6-1-2004	SCALE: 3/8" = 1'-0" H
J E GW		3/4" = 1'-0" V

EAST ELEVATION
(LOOKING WEST)

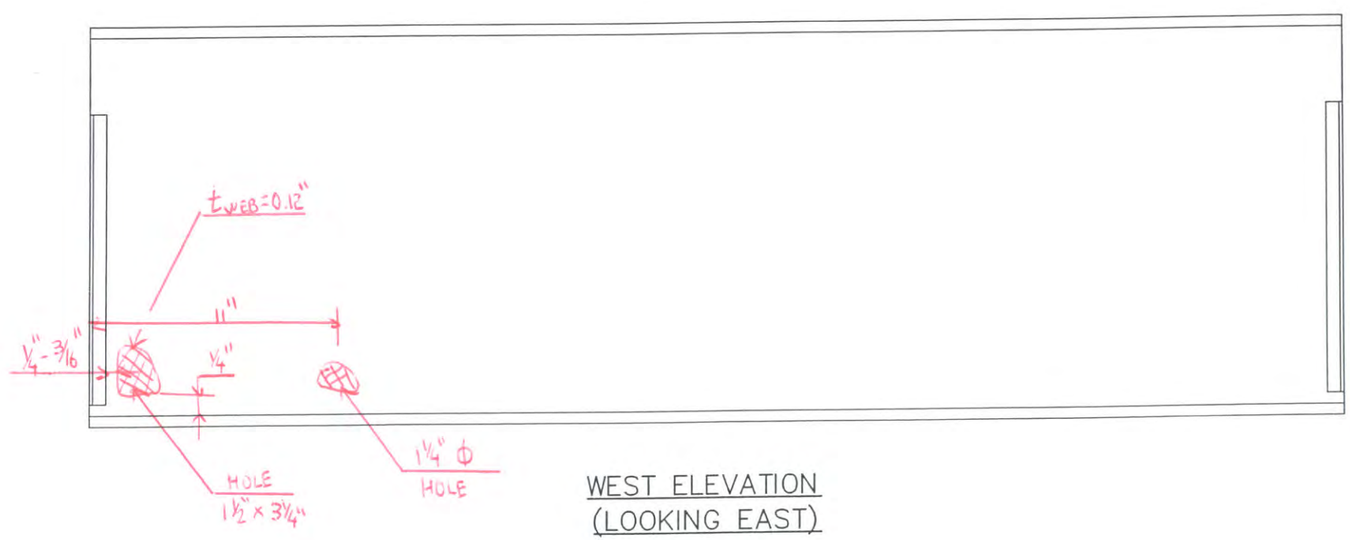

WEST ELEVATION
(LOOKING EAST)

Hoyle, Tanner Associates, Inc.
Consulting Engineers
150 Dow Street.
Manchester, NH 03101-1227
Tel 603-669-5555, Fax 603-669-4168
Web Page: www.hoyletanner.com
© Copyright 2009

SARAH LONG BRIDGE
SPAN 12 S1 CURB STRINGER BAY 3

INSPECTED BY: JB	DATE: 6-3-2009	SCALE: ⅜" = 1'-0" H
# EGW		¾" = 1'-0" V

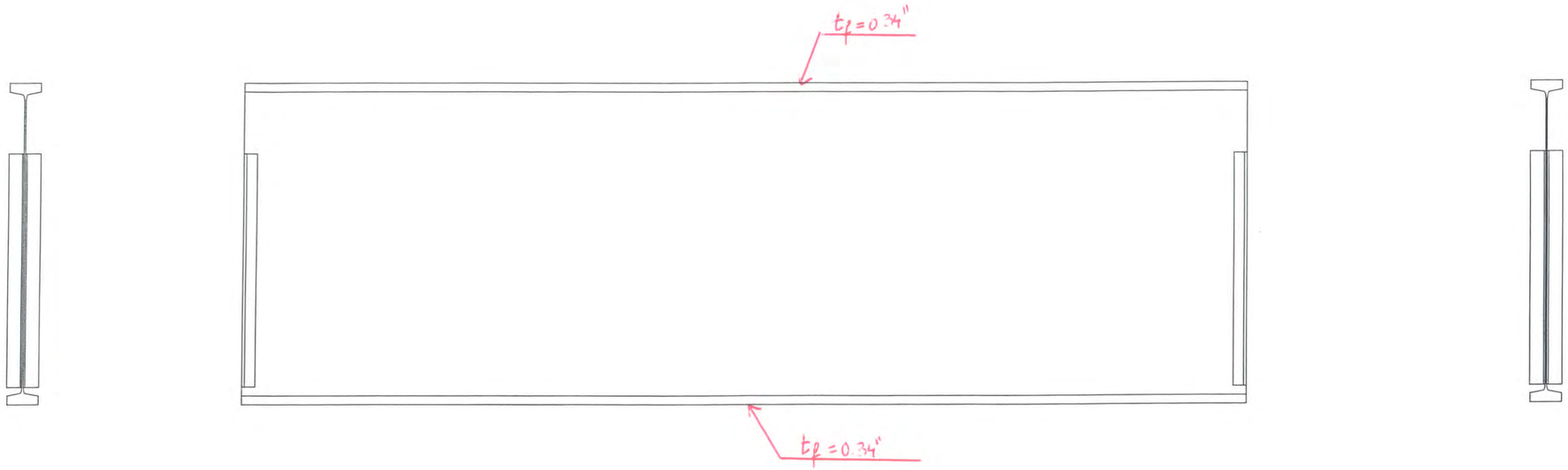

EAST ELEVATION
(LOOKING WEST)

WEST ELEVATION
(LOOKING EAST)

Hoyle, Tanner Associates, Inc.
Consulting Engineers

150 Dow Street.
Manchester, NH 03101–1227
Tel 603–669–5555, Fax 603–669–4168
Web Page: www.hoyletanner.com
© Copyright 2009

SARAH LONG BRIDGE

SPAN B S1 CURB STRINGER BAY 1

INSPECTED BY: JB	DATE: 6-3-2009	SCALE: 3/8" = 1'–0" H
EGW		3/4" = 1'–0" V

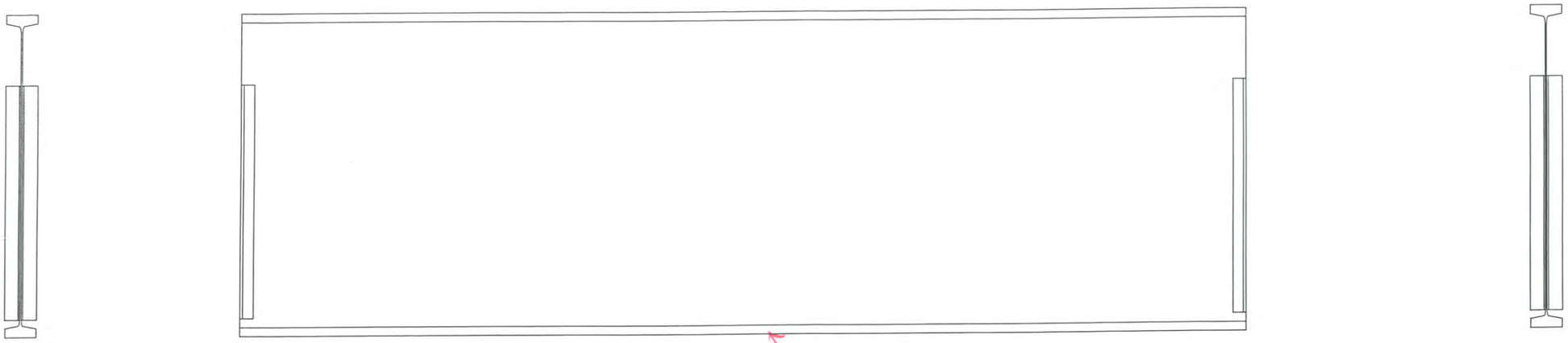

t_f = 0.38" @ EDGE OF CALIPER
t_f = 0.49" @ END OF CALIPER

EAST ELEVATION
(LOOKING WEST)

t_f = 1/4" - 5/16" ±
EXPOSED BELOW DECK
UNCERTAIN ON EMBEDED
THICKNESS IN CONCRETE

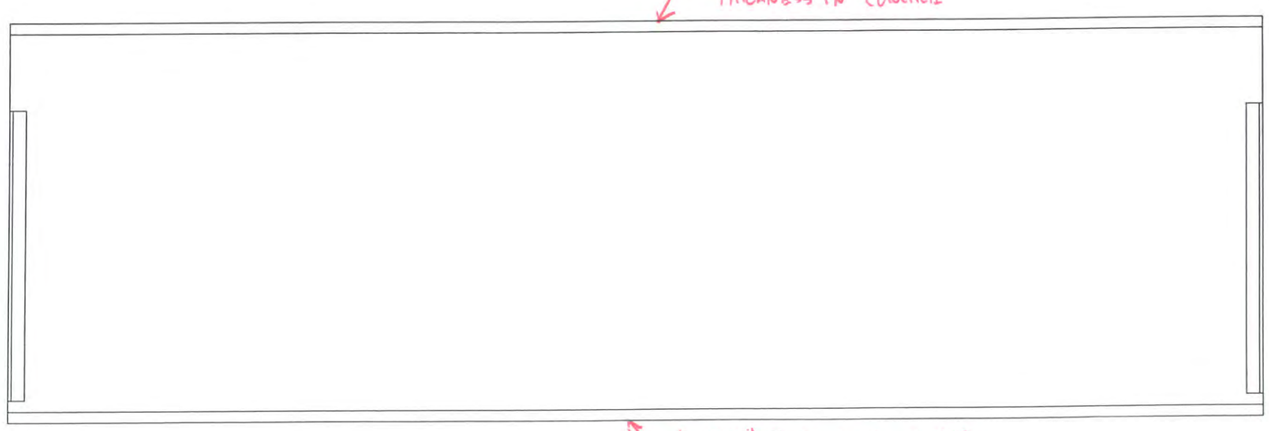

t = 0.20" @ EDGE OF CALIPER
t = 0.34" @ END OF CALIPER

WEST ELEVATION
(LOOKING EAST)

Hoyle, Tanner Associates, Inc.
Consulting Engineers
150 Dow Street,
Manchester, NH 03101-1227
Tel 603-669-5555, Fax 603-669-4168
Web Page: www.hoyletanner.com
© Copyright 2009

SARAH LONG BRIDGE
SPAN 13 S4 CURB STRINGER BAY 1

INSPECTED BY: JB	DATE: 6-1-2009	SCALE: 3/8" = 1'-0" H
& EGW		3/4" = 1'-0" V

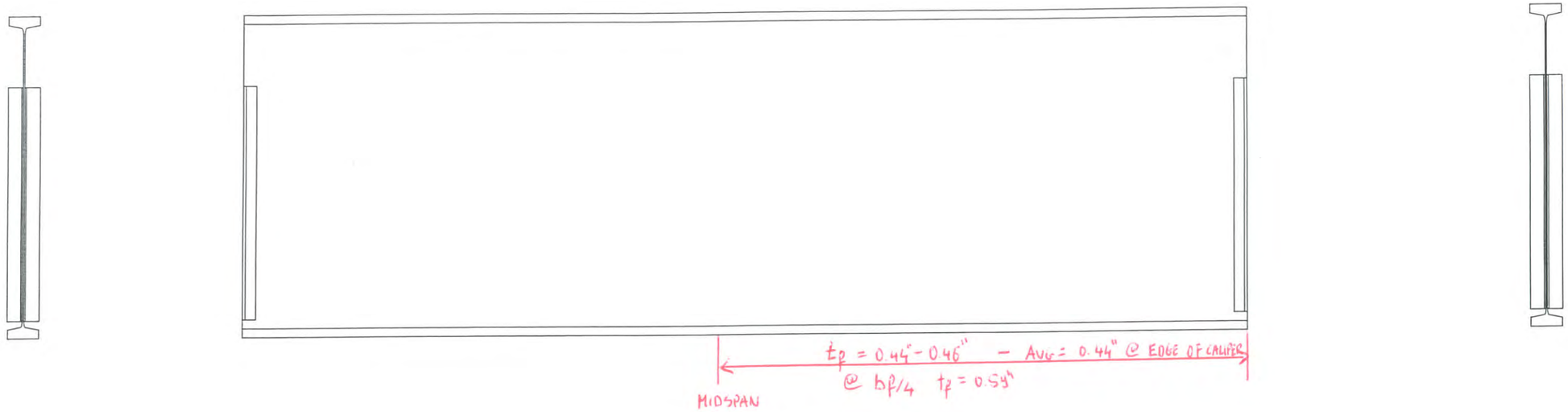

EAST ELEVATION
(LOOKING WEST)

WEST ELEVATION
(LOOKING EAST)

Hoyle, Tanner Associates, Inc.
Consulting Engineers

150 Dow Street.
Manchester, NH 03101-1227
Tel 603-669-5555, Fax 603-669-4168
Web Page: www.hoyletanner.com
© Copyright 2009

SARAH LONG BRIDGE

SPAN 1 & 4 CURB STRINGER BAY 2

INSPECTED BY: JB & EGW	DATE: 5-28-2009	SCALE: ⅜" = 1'-0" H ¾" = 1'-0" V

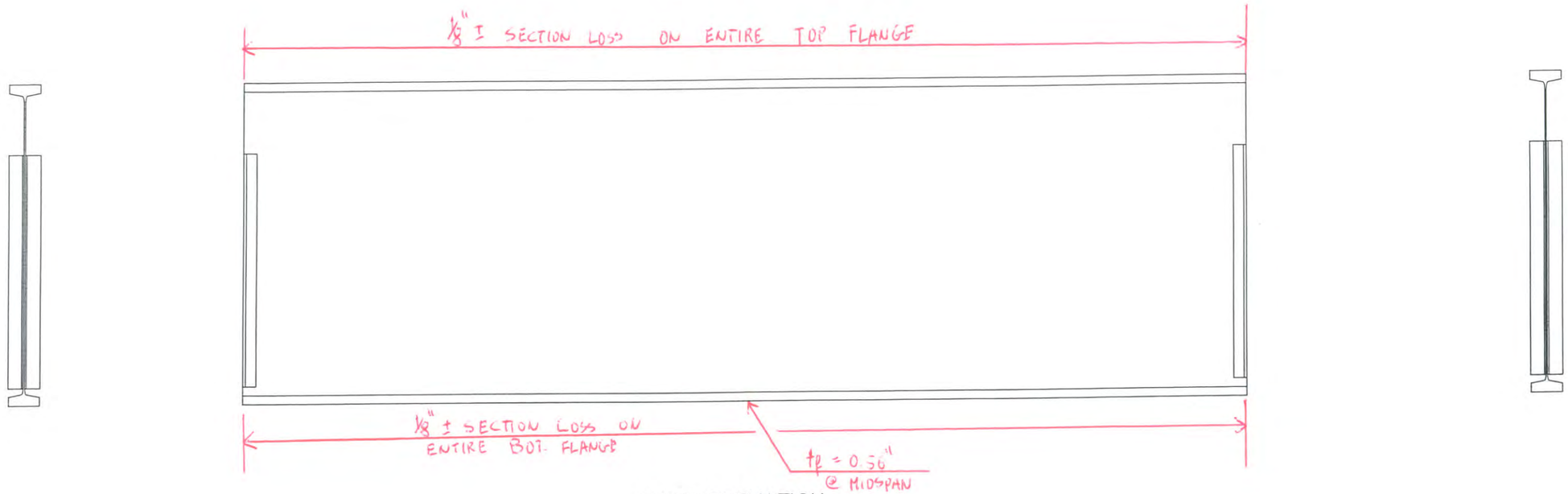

EAST ELEVATION
(LOOKING WEST)

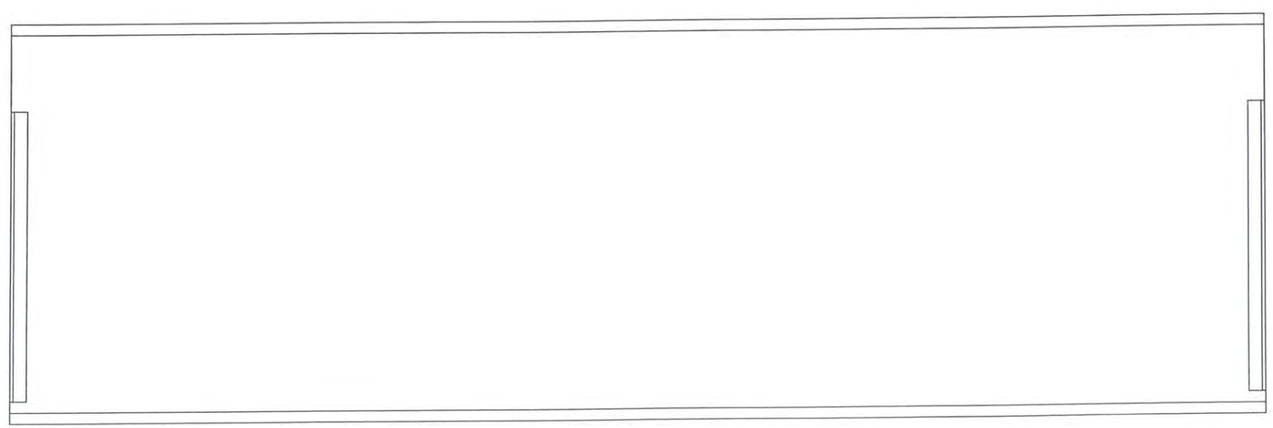

WEST ELEVATION
(LOOKING EAST)

Hoyle, Tanner Associates, Inc.
Consulting Engineers

150 Dow Street,
Manchester, NH 03101-1227
Tel 603-669-5555, Fax 603-669-4168
Web Page: www.hoyletanner.com
© Copyright 2009

SARAH LONG BRIDGE

SPAN 14 S4 CURB STRINGER BAY 3

INSPECTED BY: JB & EGW	DATE: 5-28-2009	SCALE: 3/8" = 1'-0" H 3/4" = 1'-0" V

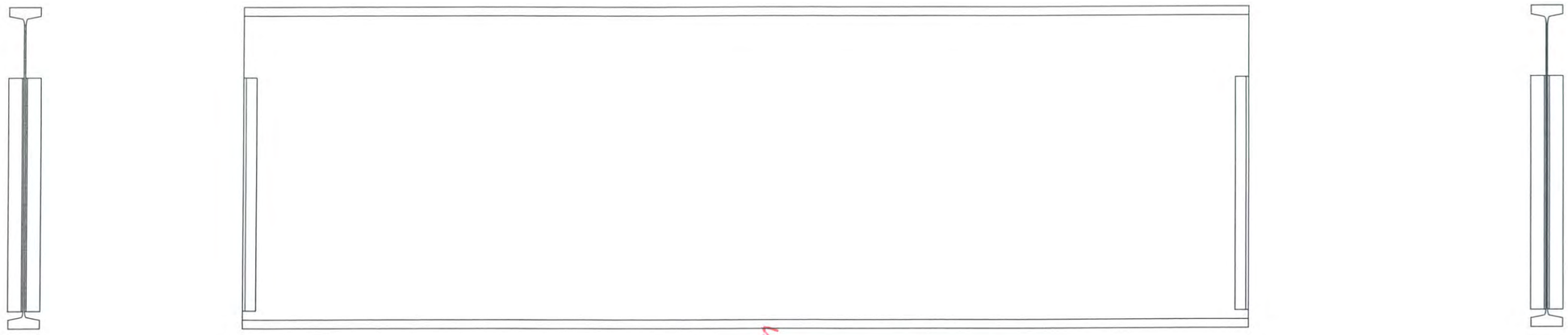

$t_f = 0.27''$ @ EDGE OF CALIPER
$t_f = 0.34''$ @ END OF CALIPER
@ MIDSPAN

EAST ELEVATION
(LOOKING WEST)

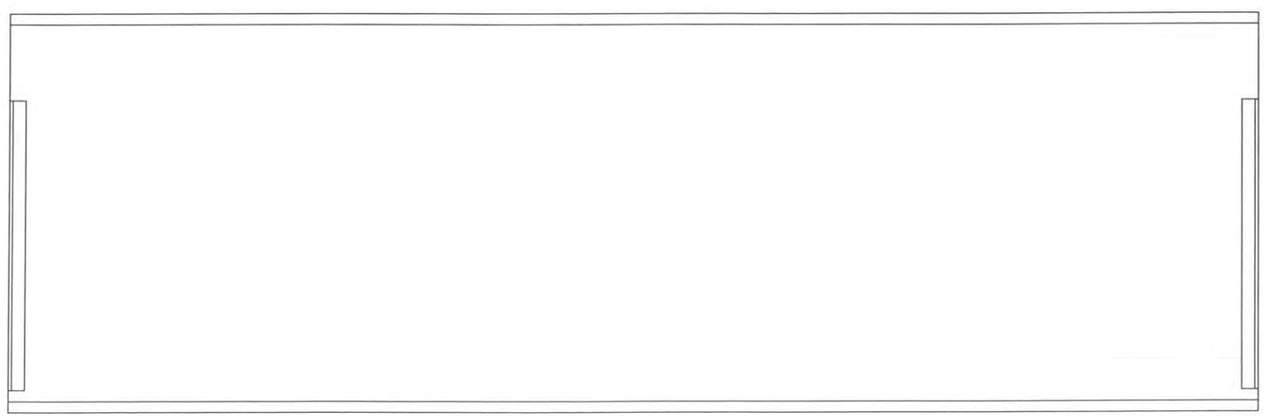

WEST ELEVATION
(LOOKING EAST)

Hoyle, Tanner Associates, Inc.
Consulting Engineers

150 Dow Street.
Manchester, NH 03101–1227
Tel 603–669–5555, Fax 603–669–4168
Web Page: www.hoyletanner.com
© Copyright 2009

SARAH LONG BRIDGE

SPAN 15 S1 CURB STRINGER BAY 1

INSPECTED BY: JB & EGW	DATE: 6-3-2009	SCALE: ⅜" = 1'–0" H ¾" = 1'–0" V

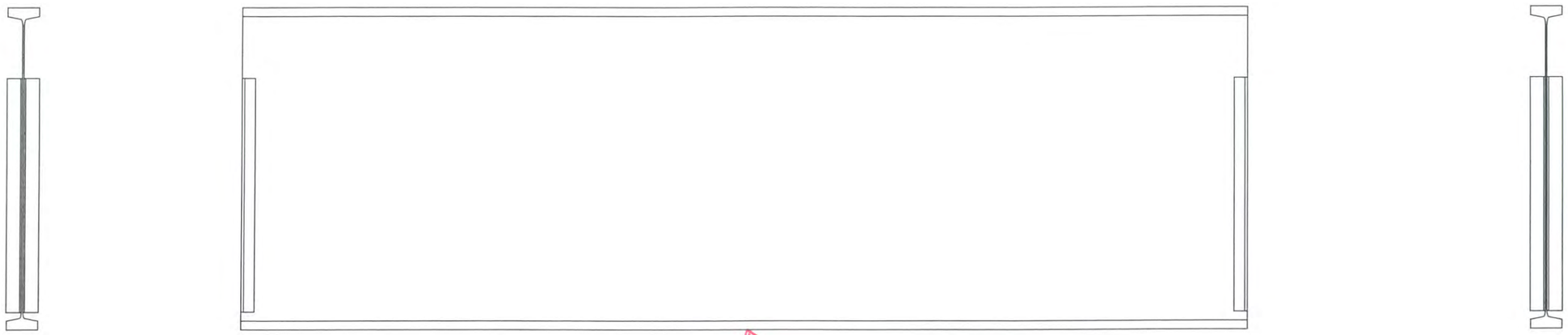

t_f = 0.38" @ EDGE OF CALIPER
t_f = 0.52" @ END OF CALIPER
REPRESENTATIVE OF ENTIRE LENGTH

EAST ELEVATION
(LOOKING WEST)

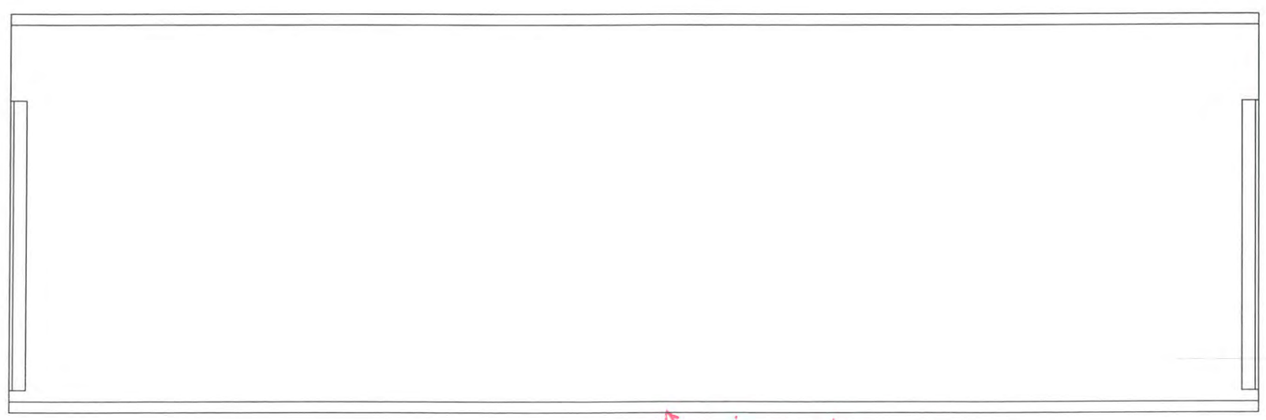

t_f = 0.45" @ EDGE OF CALIPER
t_f = 0.52" @ END OF CALIPER

WEST ELEVATION
(LOOKING EAST)

Hoyle, Tanner Associates, Inc.
Consulting Engineers

150 Dow Street.
Manchester, NH 03101-1227
Tel 603-669-5555, Fax 603-669-4168
Web Page: www.hoyletanner.com
© Copyright 2009

SARAH LONG BRIDGE
SPAN 15 S4 CURB STRINGER BAY 1

INSPECTED BY: JB	DATE: 6-1-2009	SCALE: ⅜" = 1'-0" H
& EGW		¾" = 1'-0" V

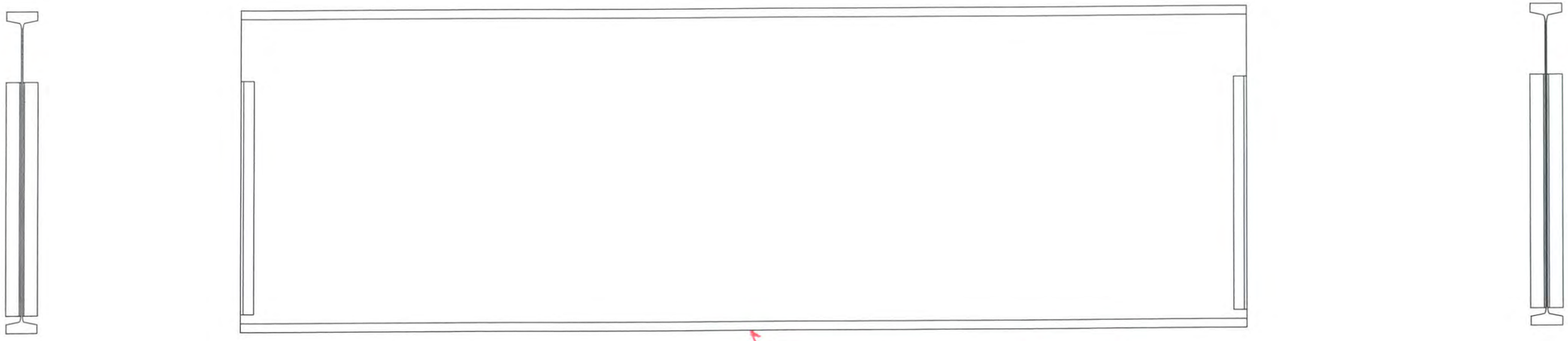

t_f BOTTOM FLANGE = 0.45" to 0.423"
ON AVERAGE = 0.43" ±
@ MIDSPAN

EAST ELEVATION
(LOOKING WEST)

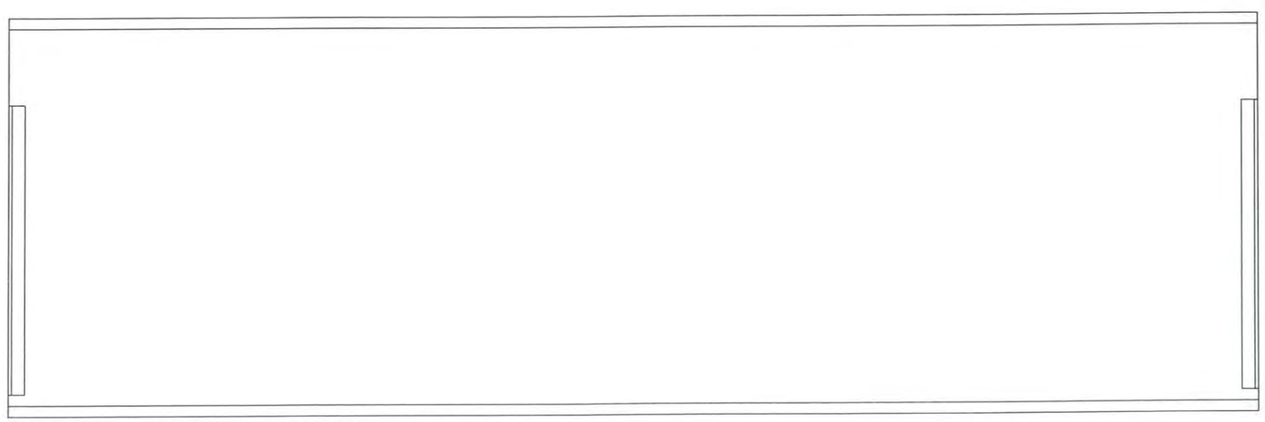

WEST ELEVATION
(LOOKING EAST)

Hoyle, Tanner Associates, Inc.
Consulting Engineers

150 Dow Street,
Manchester, NH 03101-1227
Tel 603-669-5555, Fax 603-669-4168
Web Page: www.hoyletanner.com
© Copyright 2009

SARAH LONG BRIDGE
SPAN 15 S4 CURB STRINGER BAY 3

INSPECTED BY: JB & EGW	DATE: 5-28-09	SCALE: 3/8" = 1'-0" H 3/4" = 1'-0" V

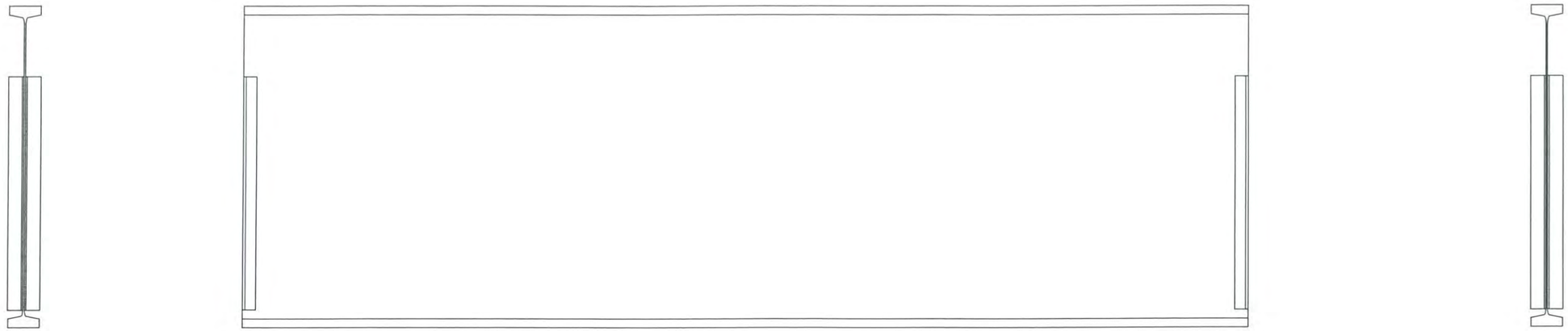

EAST ELEVATION
(LOOKING WEST)

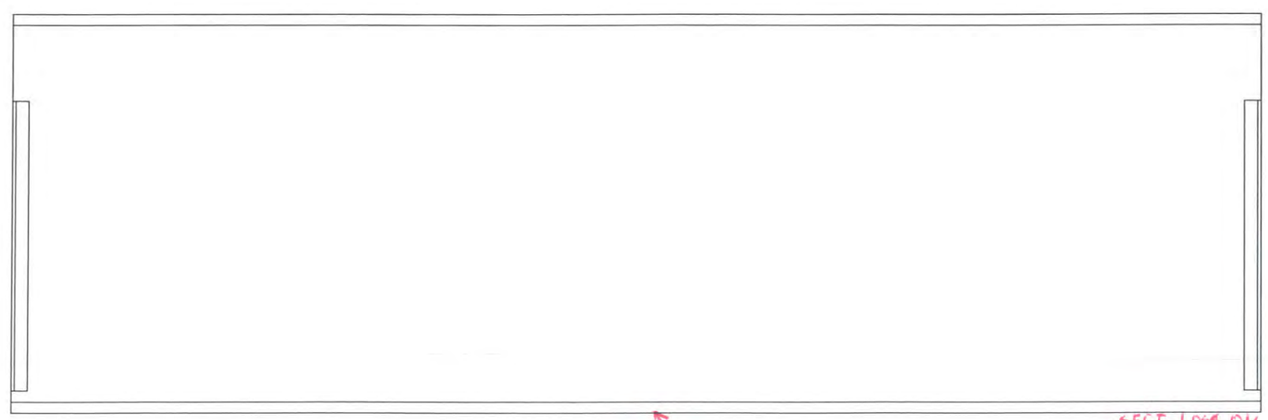

t_f = 0.27" @ EDGE OF CALIPER
t_f = 0.35" @ END OF CALIPER
} ≈ SECT. LOSS ON HALF OF THICKNESS

WEST ELEVATION
(LOOKING EAST)

Hoyle, Tanner Associates, Inc.
Consulting Engineers
150 Dow Street.
Manchester, NH 03101-1227
Tel 603-669-5555, Fax 603-669-4168
Web Page: www.hoyletanner.com

© Copyright 2009

SARAH LONG BRIDGE
SPAN 21 S1 CURB STRINGER BAY 4

INSPECTED BY: JB & EGW	DATE: 6-4-03	SCALE: ⅜" = 1'-0" H ¾" = 1'-0" V

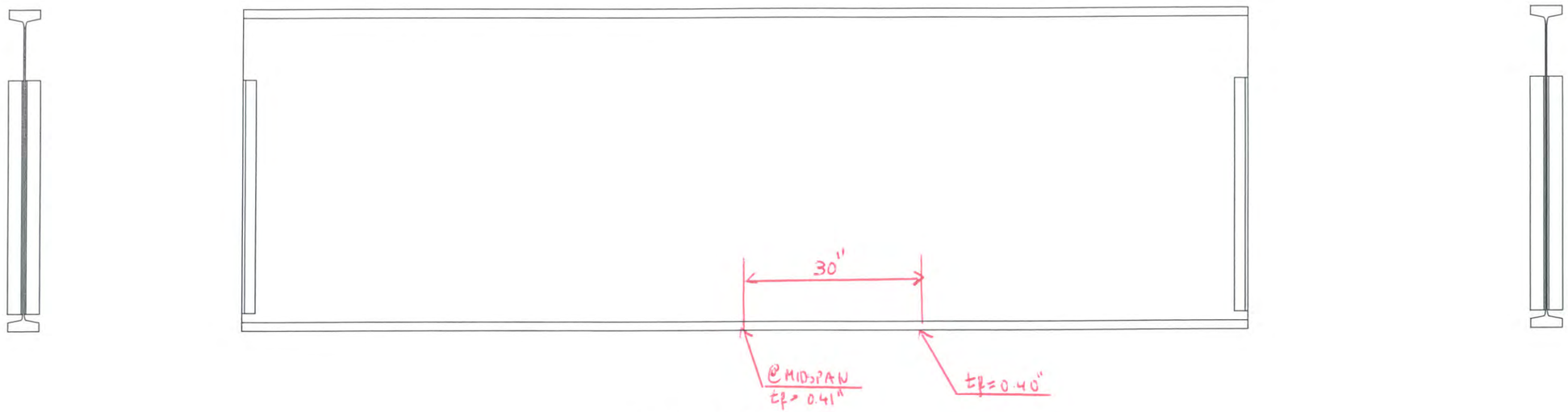

EAST ELEVATION
(LOOKING WEST)

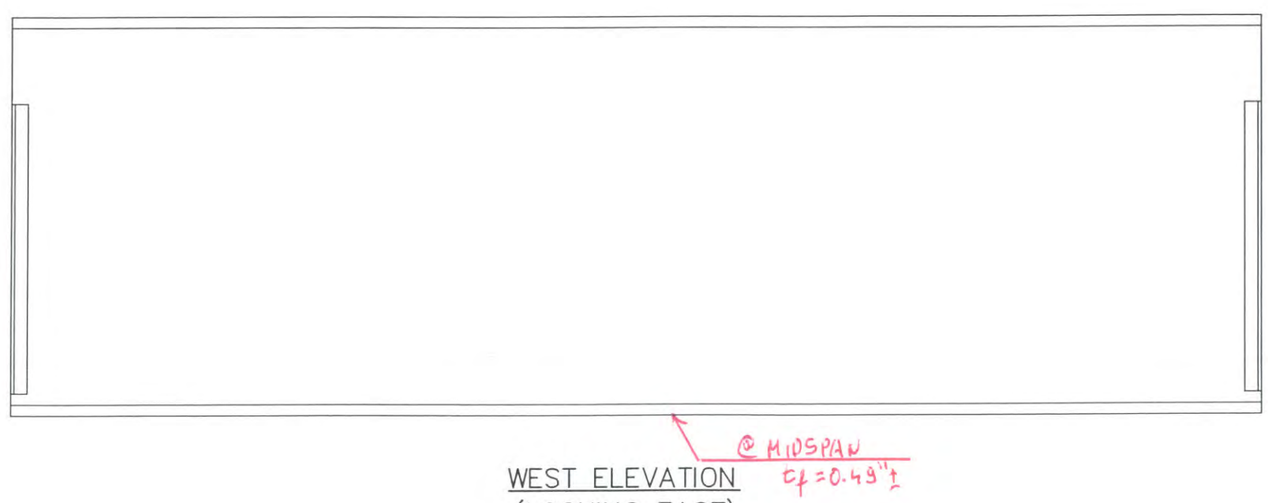

WEST ELEVATION
(LOOKING EAST)

Hoyle, Tanner Associates, Inc.
Consulting Engineers

150 Dow Street.
Manchester, NH 03101-1227
Tel 603-669-5555, Fax 603-669-4168
Web Page: www.hoyletanner.com
© Copyright 2009

SARAH LONG BRIDGE

SPAN 23 S4 CURB STRINGER BAY C

INSPECTED BY: JB	DATE: 6-4-2009	SCALE: ⅜" = 1'-0" H
@ EGW		¾" = 1'-0" V

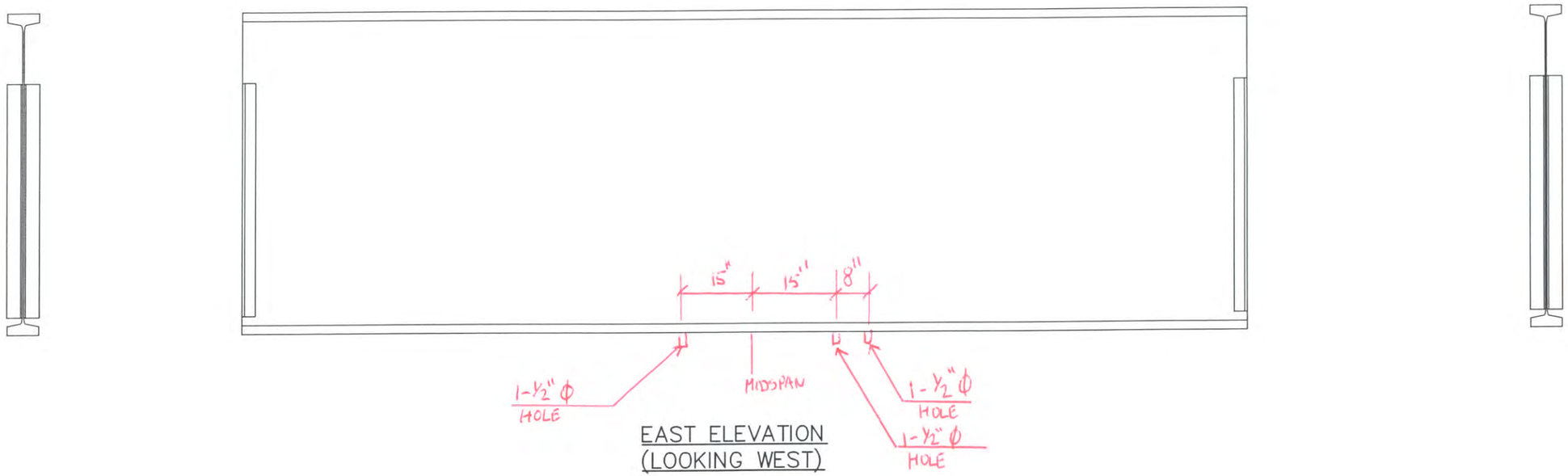

EAST ELEVATION
(LOOKING WEST)

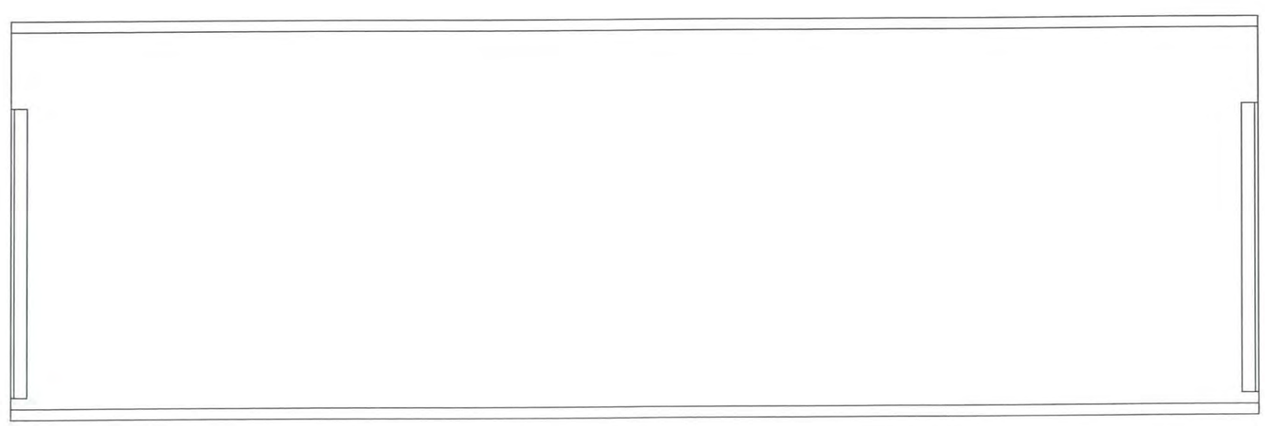

WEST ELEVATION
(LOOKING EAST)

Hoyle, Tanner Associates, Inc.
Consulting Engineers
150 Dow Street.
Manchester, NH 03101-1227
Tel 603-669-5555, Fax 603-669-4168
Web Page: www.hoyletanner.com
© Copyright 2009

SARAH LONG BRIDGE
SPAN 24 S2 ROADWAY STRINGER BAY 2

INSPECTED BY: JB & EGW	DATE:	SCALE: ⅜" = 1'-0" H ¼" = 1'-0" V

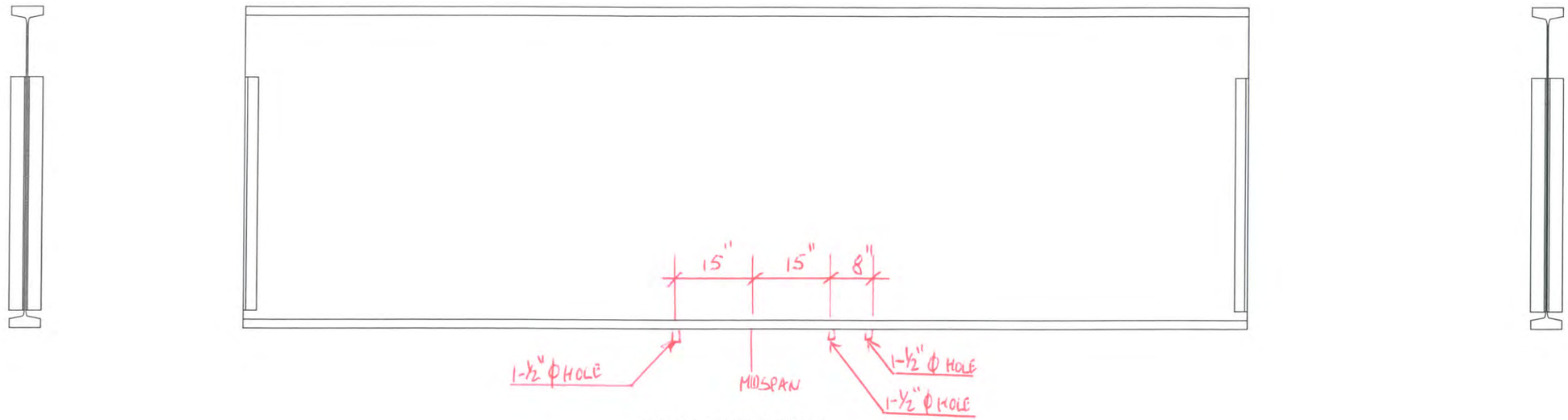

EAST ELEVATION
(LOOKING WEST)

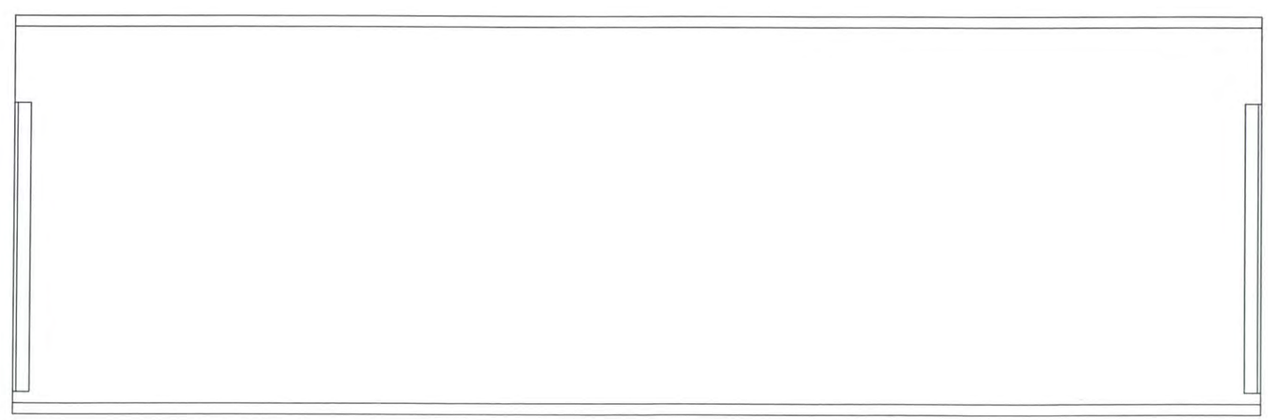

WEST ELEVATION
(LOOKING EAST)

Hoyle, Tanner Associates, Inc.
Consulting Engineers
150 Dow Street.
Manchester, NH 03101-1227
Tel 603-669-5555, Fax 603-669-4168
Web Page: www.hoyletanner.com
© Copyright 2009

SARAH LONG BRIDGE
SPAN 245.3 ROADWAY STRINGER BAT2

INSPECTED BY: JB	DATE:	SCALE: ⅛" = 1'-0" H
EGW		¼" = 1'-0" V

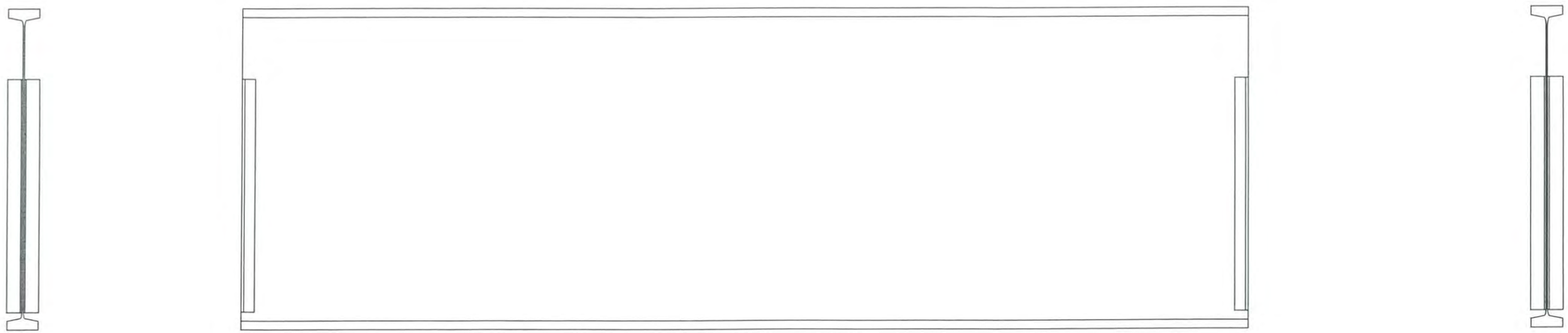

EAST ELEVATION
(LOOKING WEST)

$t_f = 0.21"$ @ MIDSPAN

WEST ELEVATION
(LOOKING EAST)

Hoyle, Tanner Associates, Inc.
Consulting Engineers
150 Dow Street.
Manchester, NH 03101-1227
Tel 603-669-5555, Fax 603-669-4168
Web Page: www.hoyletanner.com
© Copyright 2009

SARAH LONG BRIDGE
SPAN 27 S4 CURB STRINGER BAY 1

INSPECTED BY: JB	DATE: 6-2-09	SCALE: 3/8" = 1'-0" H
℄ EGW		3/4" = 1'-0" V

Section D:

Pier Bents 21-26 Condition

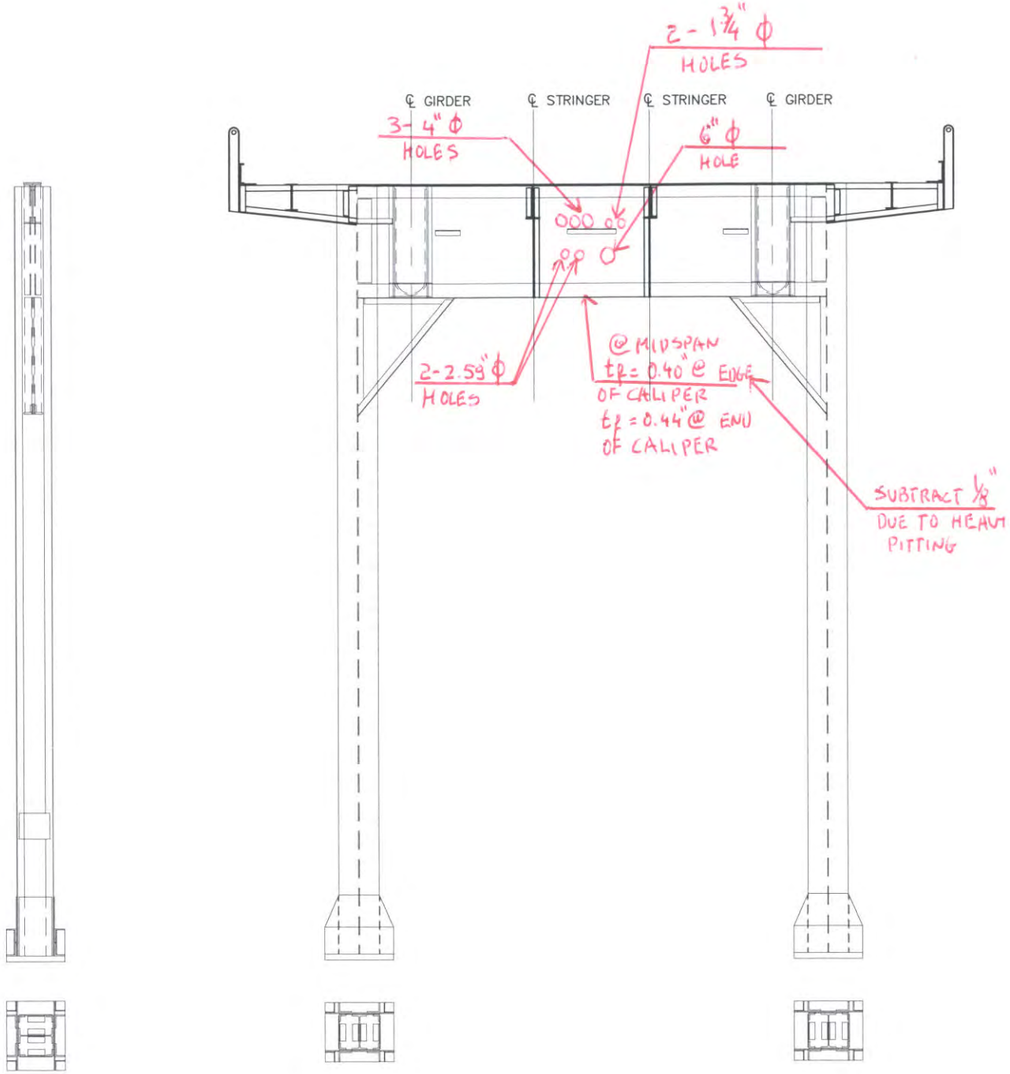

WEST ELEVATION
(LOOKING EAST)

SOUTH ELEVATION
(LOOKING NORTH)

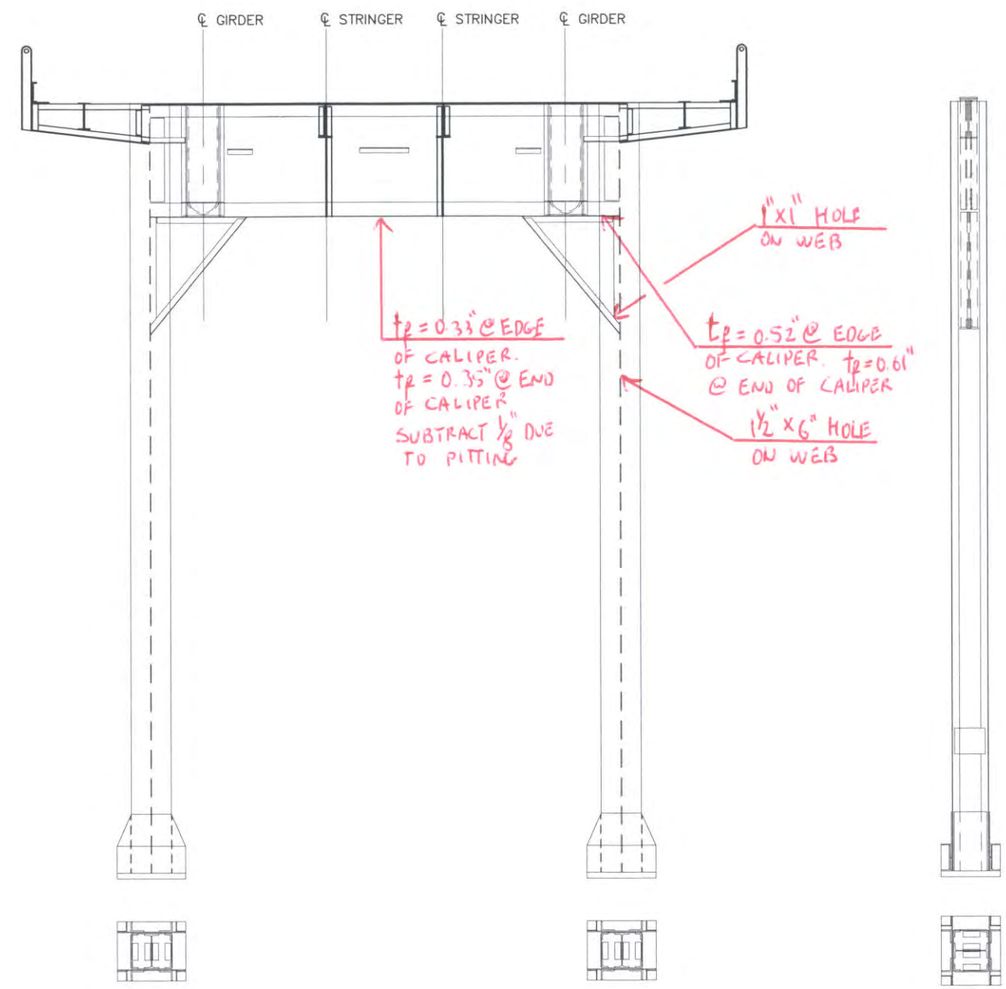

NORTH ELEVATION
(LOOKING SOUTH)

EAST ELEVATION
(LOOKING WEST)

Hoyle, Tanner Associates, Inc.
Consulting Engineers

150 Dow Street.
Manchester, NH 03101-1227
Tel 603-669-5555, Fax 603-669-4168
Web Page: www.hoyletanner.com
© Copyright 2009

SARAH LONG BRIDGE
PIER 21 BENT

INSPECTED BY: JB & EGW	DATE: 6-2-09 6-4-09	SCALE: NTS

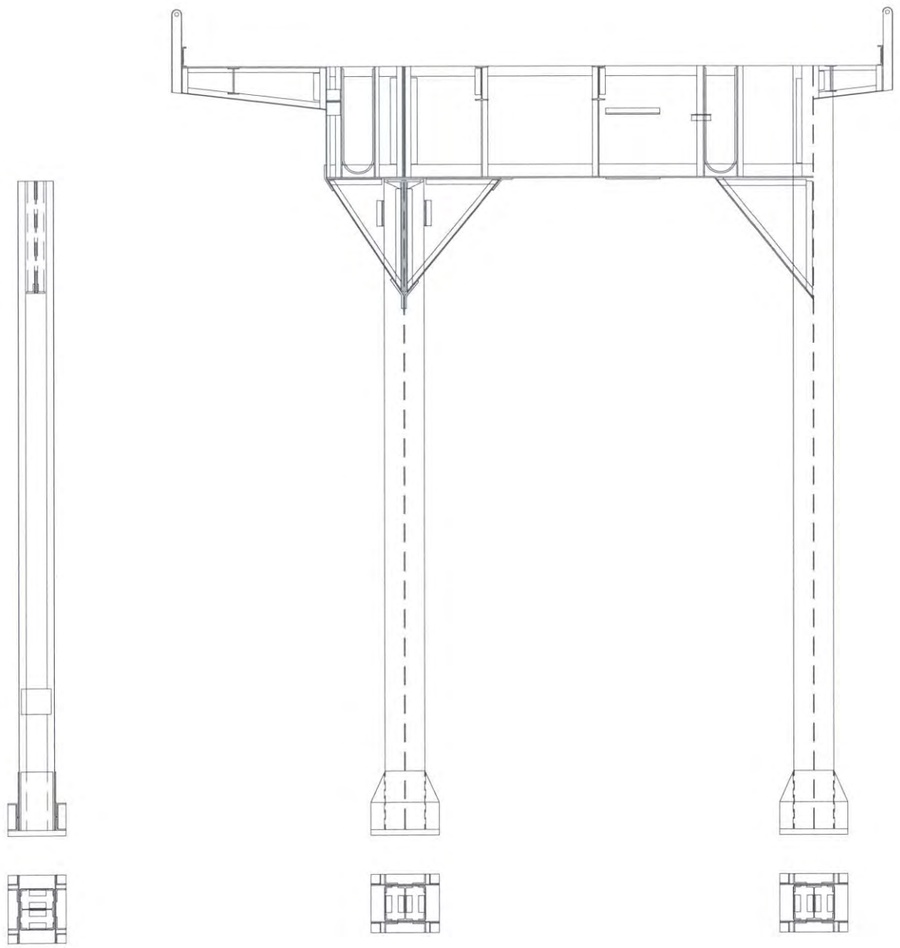

WEST ELEVATION
(LOOKING EAST)

SOUTH ELEVATION
(LOOKING NORTH)

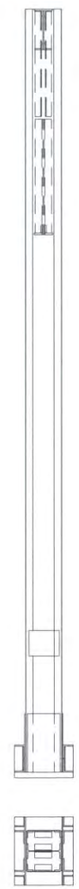

WEST ELEVATION
(LOOKING EAST)

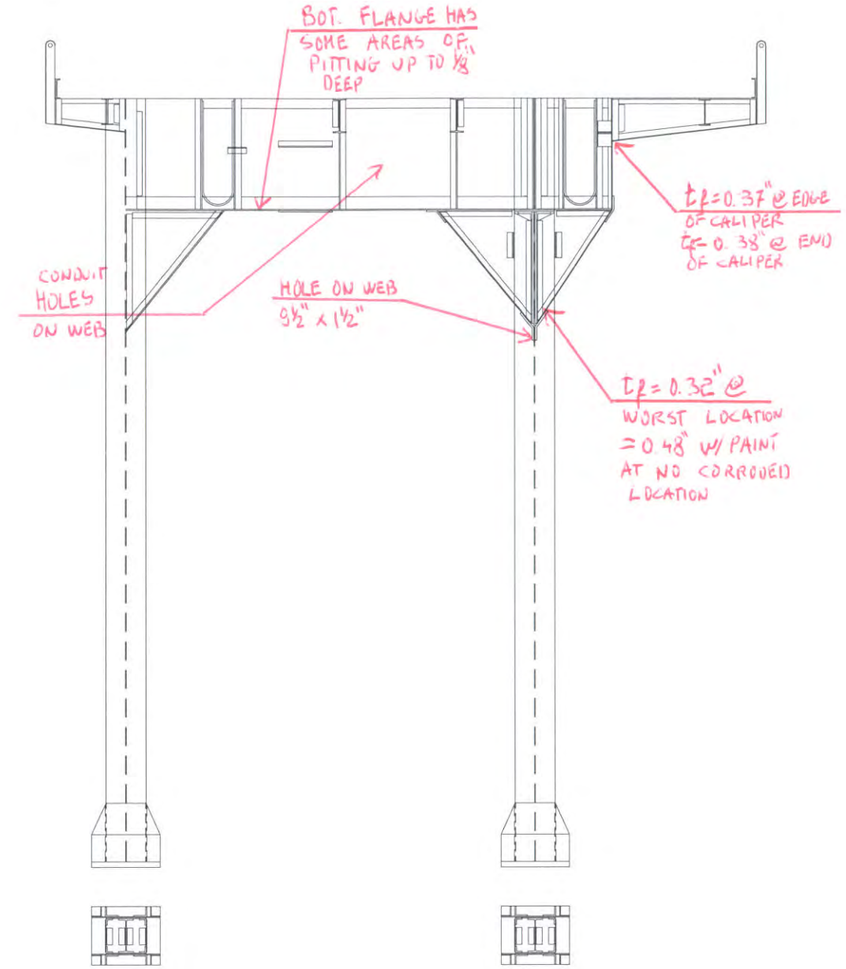

NORTH ELEVATION
(LOOKING SOUTH)

Hoyle, Tanner & Associates, Inc.
Consulting Engineers

150 Dow Street.
Manchester, NH 03101–1227
Tel 603–669–5555, Fax 603–669–4168
Web Page: www.hoyletanner.com
© Copyright 2009

SARAH LONG BRIDGE
PIER 22 BENT

INSPECTED BY: JB & EGW	DATE:	SCALE: NTS

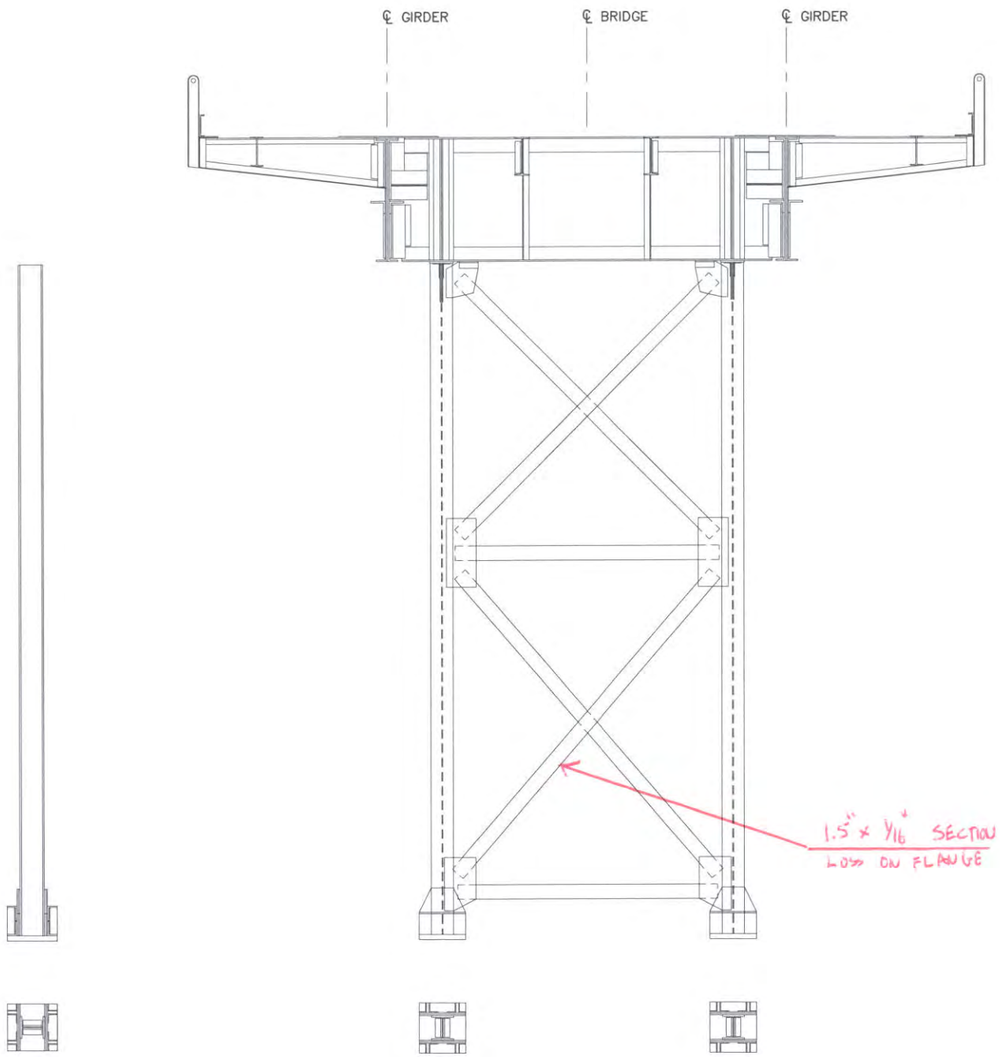

WEST ELEVATION
(LOOKING EAST)

SOUTH ELEVATION
(LOOKING NORTH)

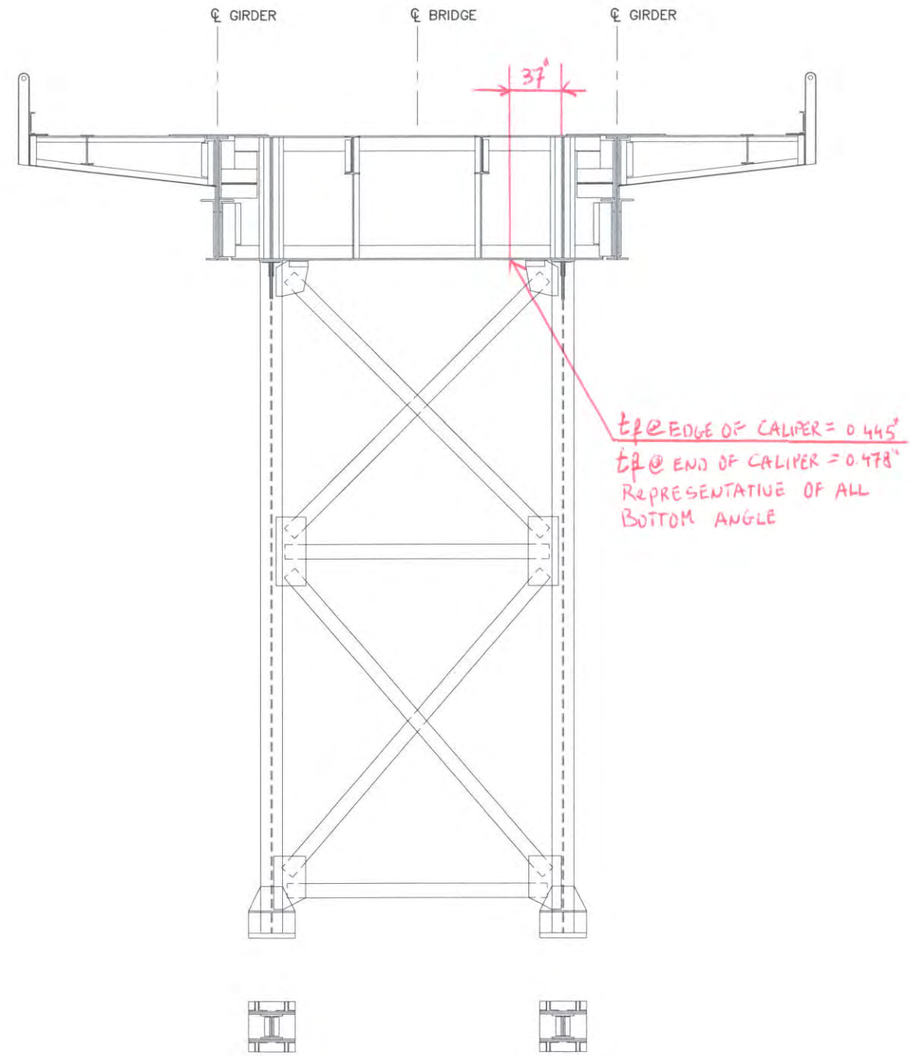

NORTH ELEVATION
(LOOKING SOUTH)

EAST ELEVATION
(LOOKING WEST)

Hoyle, Tanner Associates, Inc.
Consulting Engineers
150 Dow Street.
Manchester, NH 03101-1227
Tel 603-669-5555, Fax 603-669-4168
Web Page: www.hoyletanner.com
© Copyright 2009

SARAH LONG BRIDGE
PIER 23 BENT

INSPECTED BY:	DATE:	SCALE: NTS

WEST ELEVATION
(LOOKING EAST)

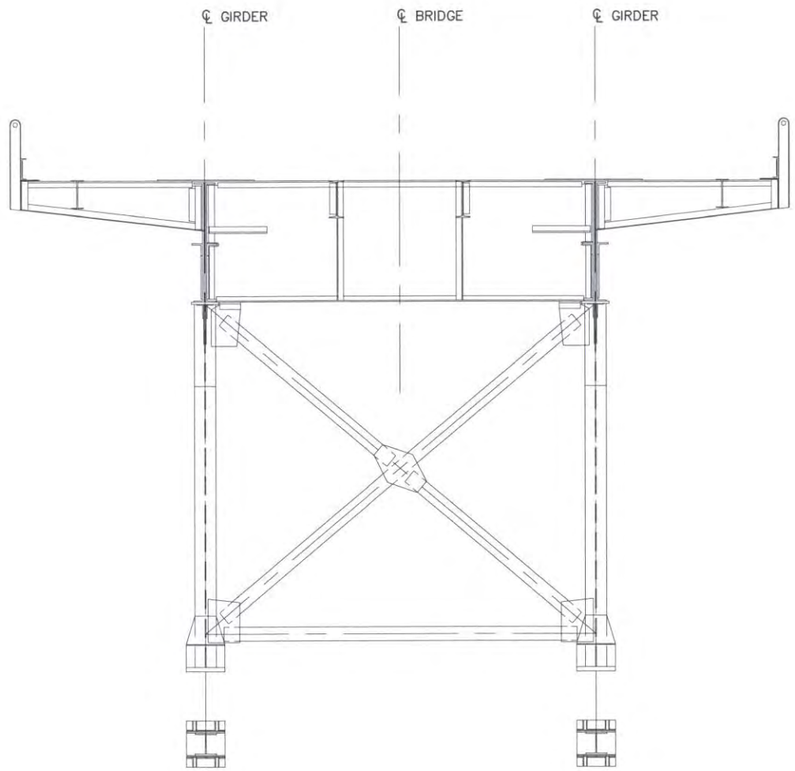

SOUTH ELEVATION
(LOOKING NORTH)

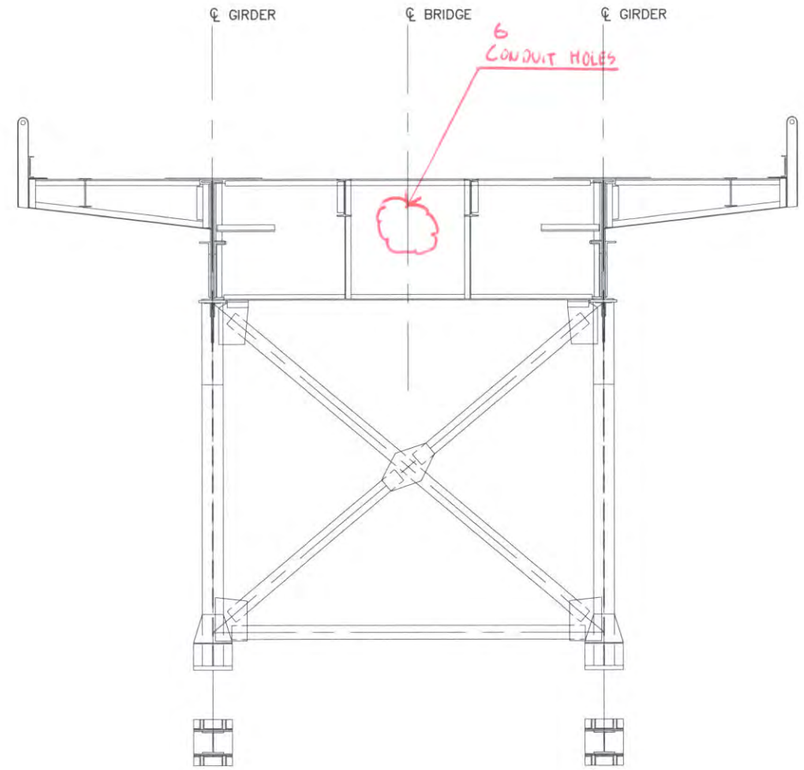

NORTH ELEVATION
(LOOKING SOUTH)

EAST ELEVATION
(LOOKING WEST)

Hoyle, Tanner & Associates, Inc.
Consulting Engineers
150 Dow Street.
Manchester, NH 03101-1227
Tel 603-669-5555, Fax 603-669-4168
Web Page: www.hoyletanner.com
© Copyright 2009

SARAH LONG BRIDGE
PIER 24 BENT

INSPECTED BY: JB & EGW	DATE: 6-6-2004	SCALE: NTS

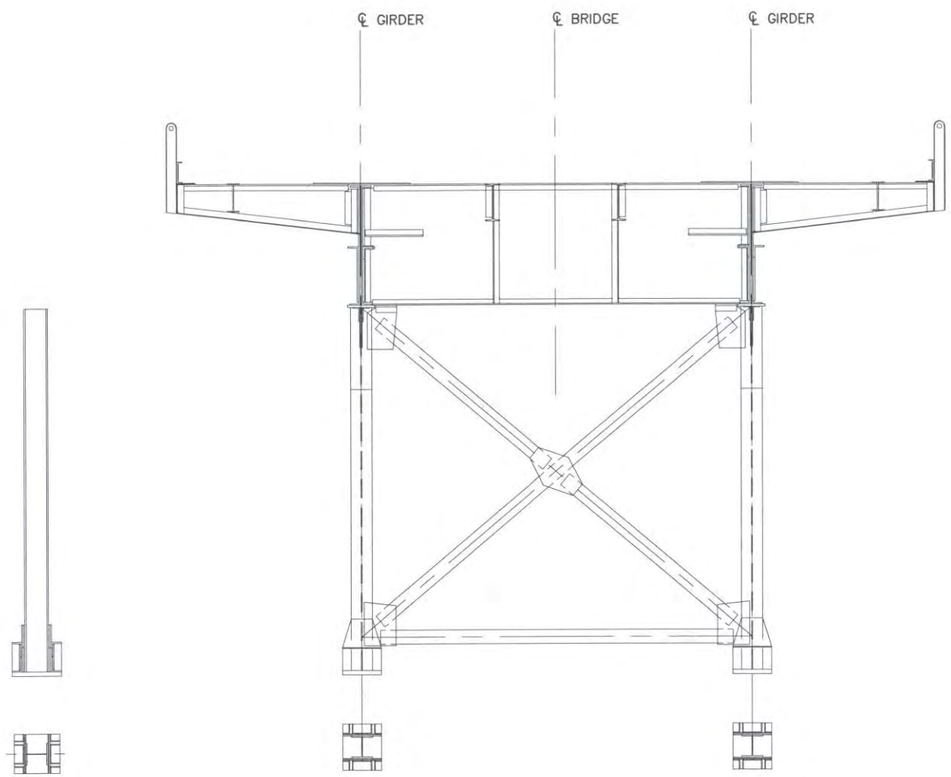

WEST ELEVATION
(LOOKING EAST)

SOUTH ELEVATION
(LOOKING NORTH)

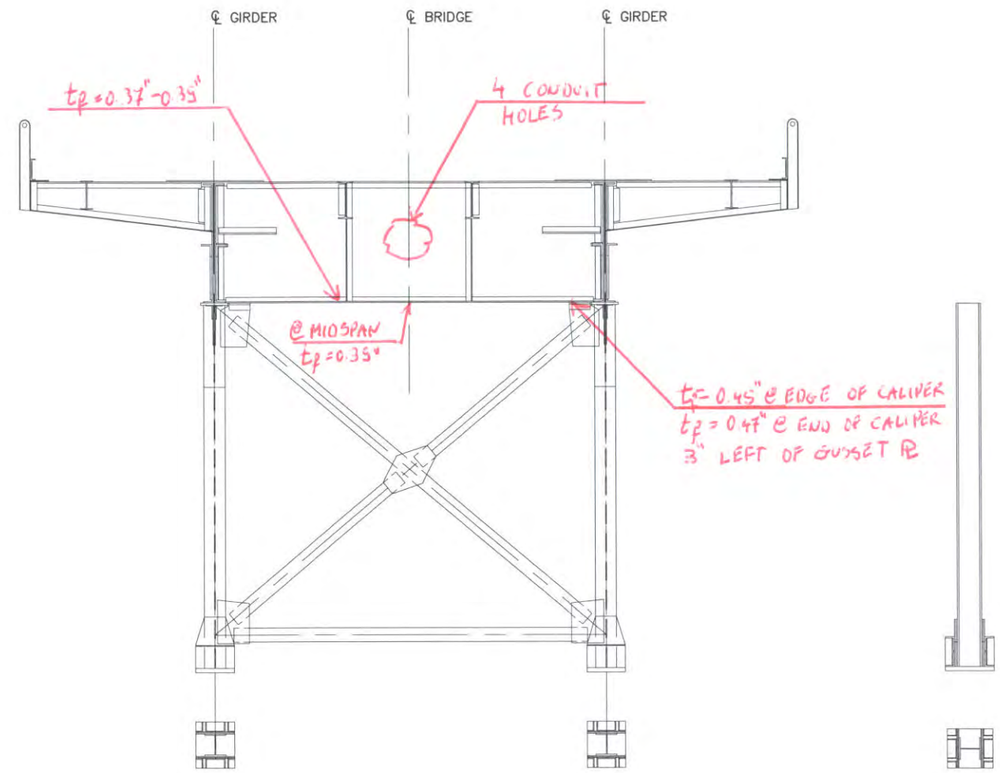

NORTH ELEVATION
(LOOKING SOUTH)

EAST ELEVATION
(LOOKING WEST)

Hoyle, Tanner Associates, Inc.
Consulting Engineers
150 Dow Street.
Manchester, NH 03101-1227
Tel 603-669-5555, Fax 603-669-4168
Web Page: www.hoyletanner.com
© Copyright 2009

SARAH LONG BRIDGE
PIER 25 BENT

INSPECTED BY: JB & EGW	DATE: 6-6-09 6-4-09	SCALE: NTS

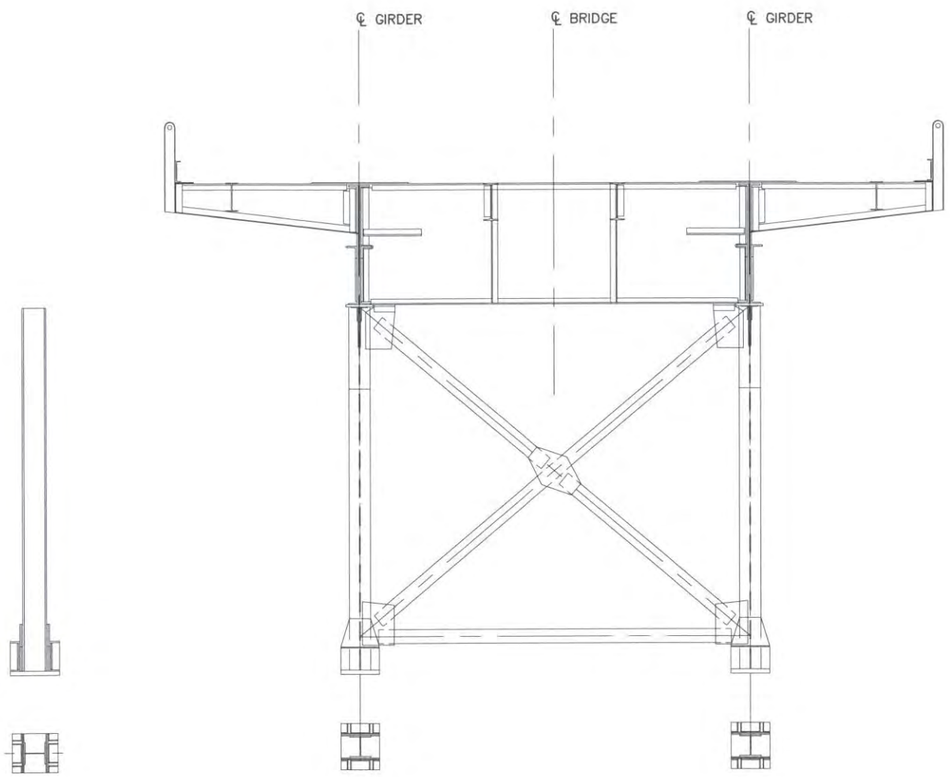

WEST ELEVATION
(LOOKING EAST)

SOUTH ELEVATION
(LOOKING NORTH)

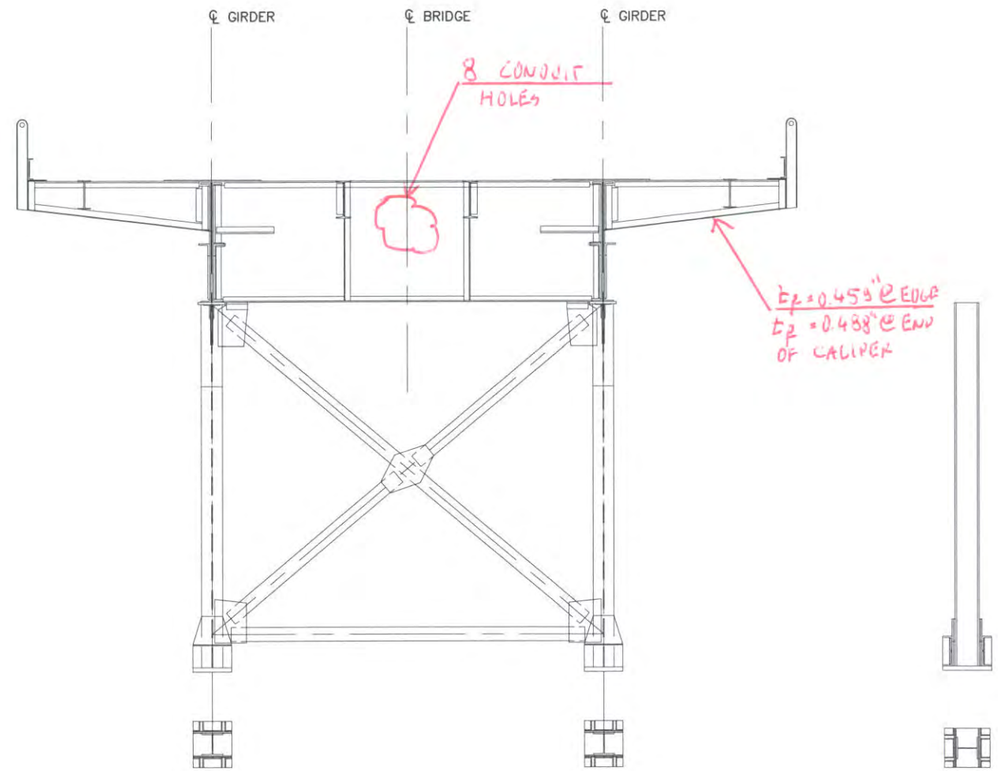

NORTH ELEVATION
(LOOKING SOUTH)

EAST ELEVATION
(LOOKING WEST)

Hoyle, Tanner Associates, Inc.
Consulting Engineers

150 Dow Street.
Manchester, NH 03101–1227
Tel 603–669–5555, Fax 603–669–4168
Web Page: www.hoyletanner.com
© Copyright 2009

SARAH LONG BRIDGE
PIER 26 BENT

INSPECTED BY: JB & EGW	DATE: 6-4-2009	SCALE: NTS