New Castle-Rye 16127
Preliminary Design

New Hampshire DOT
Department of Transportation

New Castle-Rye Bridge
Public Informational Meeting
May 28, 2014

HDR
Hoyle, Tanner & Associates, Inc.

Meeting Agenda

- Welcome & introductions
- Today's presentation – progress update and discussion of fixed bridge
  - Project Background
  - Review of Alternatives
  - Comparison of Alternatives
- Moving Forward

New Hampshire DOT Department of Transportation

Why is the bridge project needed?

- Bridge not designed for today's modern trucks.
  - Designed for "H20" Truck – 20 tons
  - Required to carry "HL93" Loading – a 36 ton truck plus 64 pounds/square foot (roughly 52 tons per span)
- Shoulders, sidewalk and railings do not meet current standards
- Bridge deteriorated due to harsh environment
- Extensive maintenance, rehabilitation and repair work performed since 1994
  - Deck
  - Beams
  - Machinery
  - Piers
- Currently posted at a 15 Ton Weight Limit

New Hampshire DOT Department of Transportation

Structural Condition of the Bridge

- Paint masks current condition of bridge
- Stringers, floorbeams and bascule girders exhibit advanced section loss
- Pier caps and piles exhibit advanced section loss; Some piles are buckled
- Machinery is obsolete

New Hampshire DOT Department of Transportation

Structural Condition of the Bridge

- Analysis determined that virtually all members are inadequate

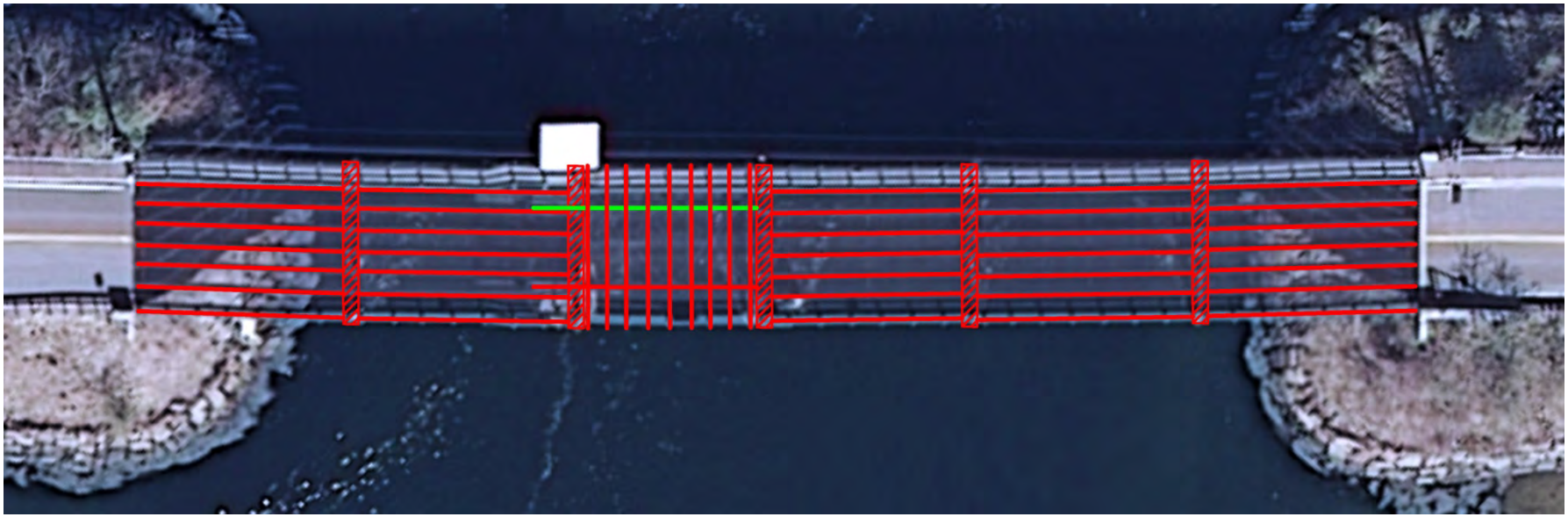

LEGEND:

MEMBER STRENGTH IS SUFFICIENT

MEMBER STRENGTH IS INSUFFICIENT

New Hampshire DOT Department of Transportation

Four Alternatives Initially Considered

- Four alternatives introduced in July 2012
  - Alternative 1 – Major Rehabilitation
  - ~~Alternative 2 – Raised Profile, Replacement with Fixed Bridge~~
  - Alternative 3 – Replacement with Bascule
  - ~~Alternative 4 – Off-line Construction, Replacement with Bascule~~

Two Alternatives Fully Evaluated Fall 2013

- Major Rehabilitation (Formerly “Alternative 1”)
- Replacement with a bascule structure (Formerly “Alternative 3”)

New Hampshire DOT Department of Transportation

Why these two Alternatives?

- Raised Profile and Off-Alignment Alternatives cause unreasonable impacts to environment, surrounding areas and community
- Assumed from previous experience that USCG would require that navigable channel not be restricted
- Prior agreement to preserve existing bridge through Memorandum of Agreement with SHPO
- Prior agreement to preserve moveable bridge through previous bridge permit

Factors Evaluated

- Each Alternative was analyzed for:
  - Environmental and aesthetic impacts
  - Structural design and roadway design
  - Construction feasibility
  - Minimizing traffic disruption
  - Coordination with NH State Historic Preservation Office (SHPO) & other agencies
  - Cost

Bascule Recommended January 2014

- Replacement with bascule would be more cost effective than Rehabilitation, and would require a shorter construction time
- Replacement with bascule provided improved roadway surface and width
- Maintaining a bascule bridge would adhere to Scammel Memorandum of Agreement as much as possible
- Facilitate permitting
  - Would not further restrict navigable clearances

New Hampshire DOT Department of Transportation

Navigable Clearances

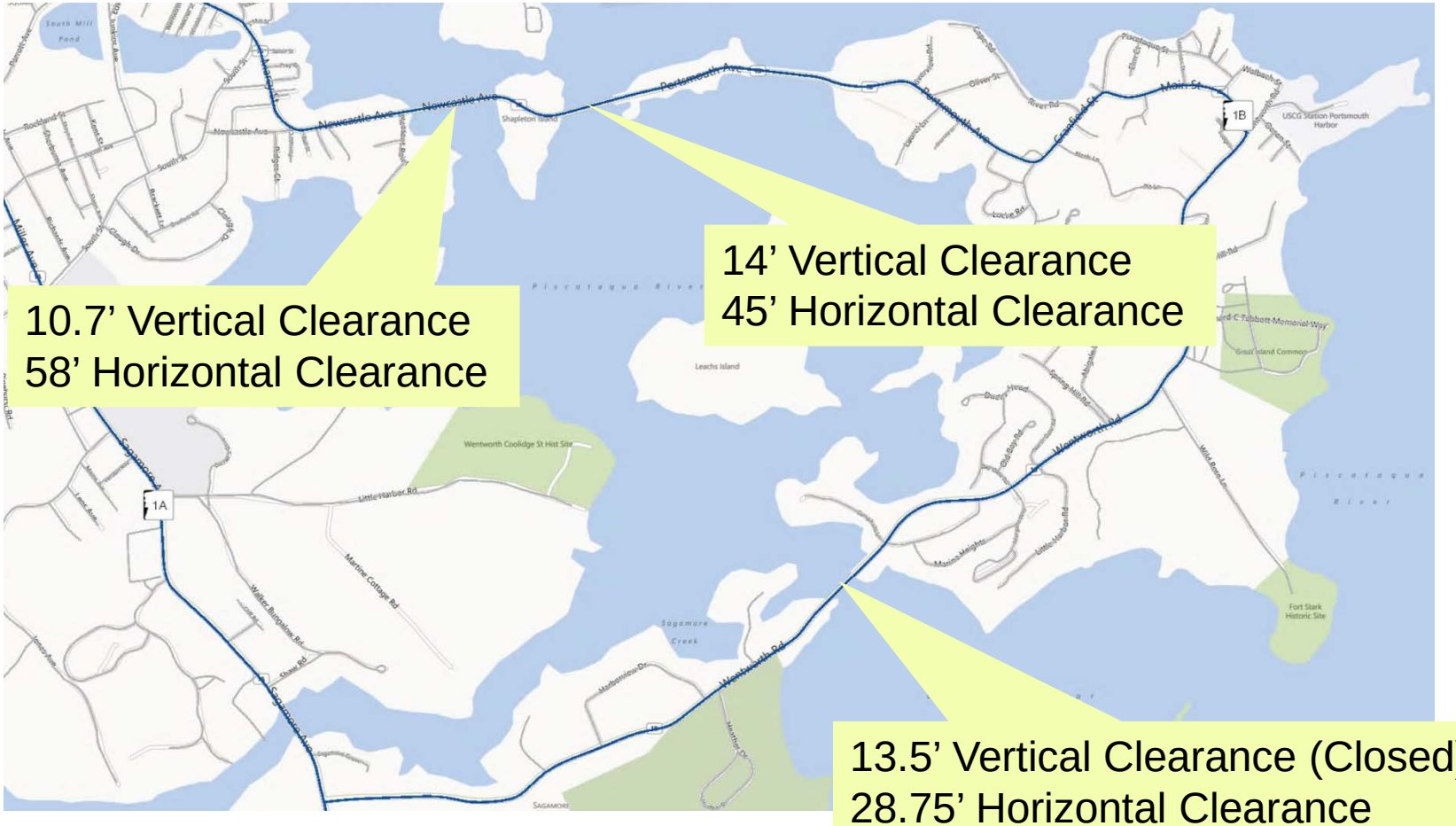

10.7’ Vertical Clearance
58’ Horizontal Clearance

14’ Vertical Clearance
45’ Horizontal Clearance

13.5’ Vertical Clearance (Closed)
28.75’ Horizontal Clearance

New Hampshire DOT Department of Transportation

Review of Fixed Bridge

- Fixed bridge at existing grade not initially considered viable alternative due to anticipated impacts
- Concerns raised about potential cost savings with fixed bridge instead of bascule
- NHDOT has decided to investigate this Alternative
  - Currently few openings (14 from 2010-2013)
  - Cost savings (about $10 million)

New Hampshire DOT Department of Transportation

Review of Fixed Bridge – PAC and Agency Meetings

- Met with USCG, DMTF to discuss Alternatives
  - Fixing bridge would restrict USACE access to the cove and Sagamore Creek
  - Dredging may be impeded, but wider navigable channel is a benefit of both alternatives
  - Impacts to commercial use – due to dredging or restricted clearances – are a concern
  - Public outreach for users of waterway required
- Input from PAC
  - Lower cost of Fixed Alternative is a benefit
  - Potential indirect costs of fixed structure may be a concern

New Hampshire DOT Department of Transportation

Review of Fixed Bridge

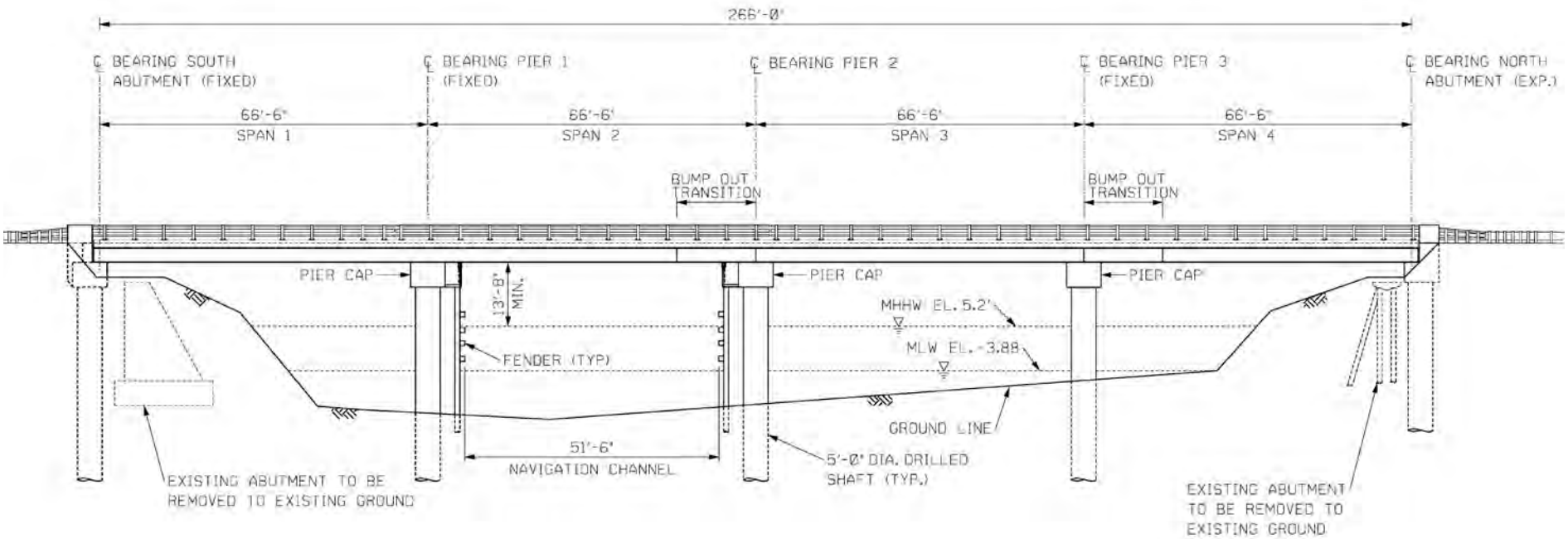

New Hampshire DOT
Department of Transportation

Review of Fixed Bridge

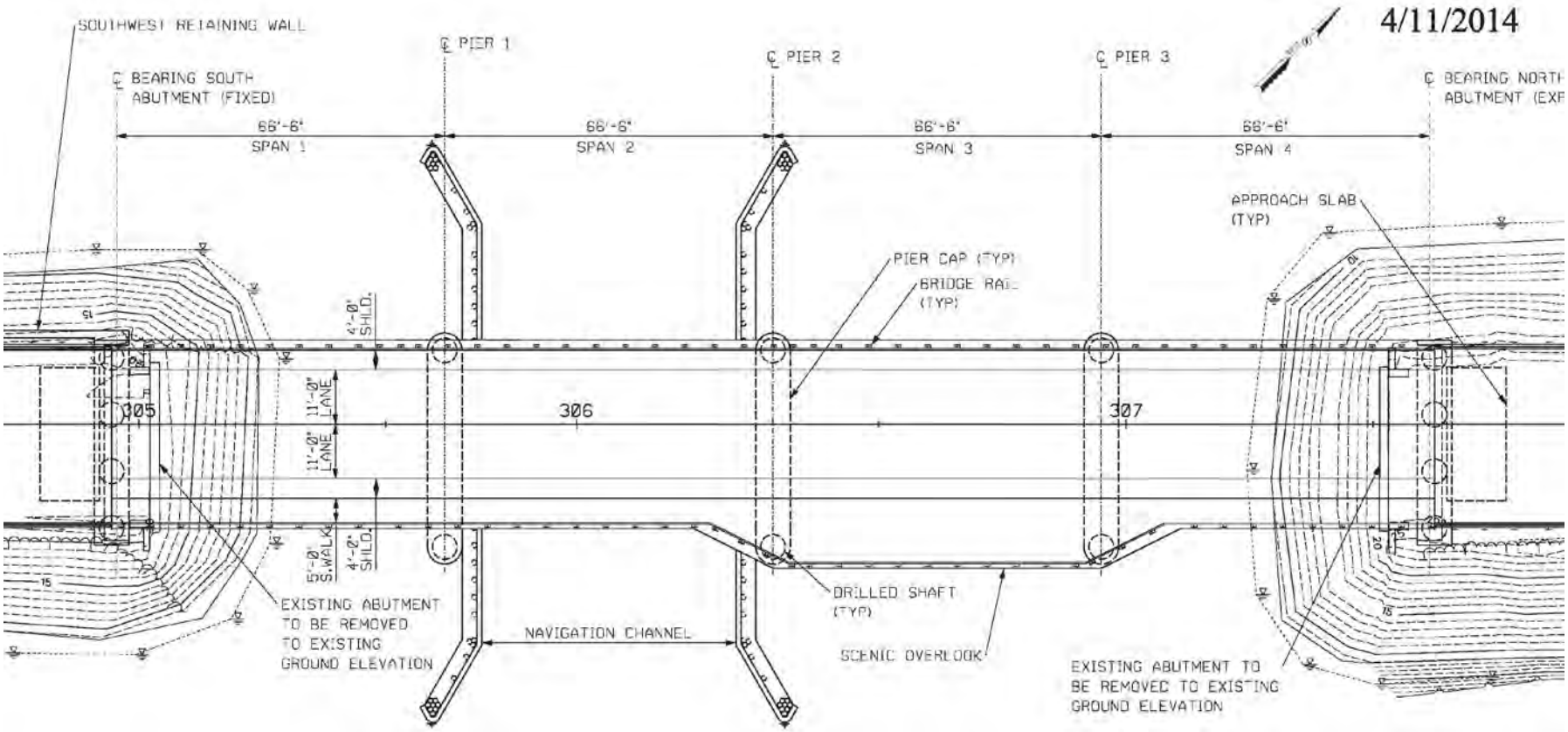

Review of Fixed Bridge

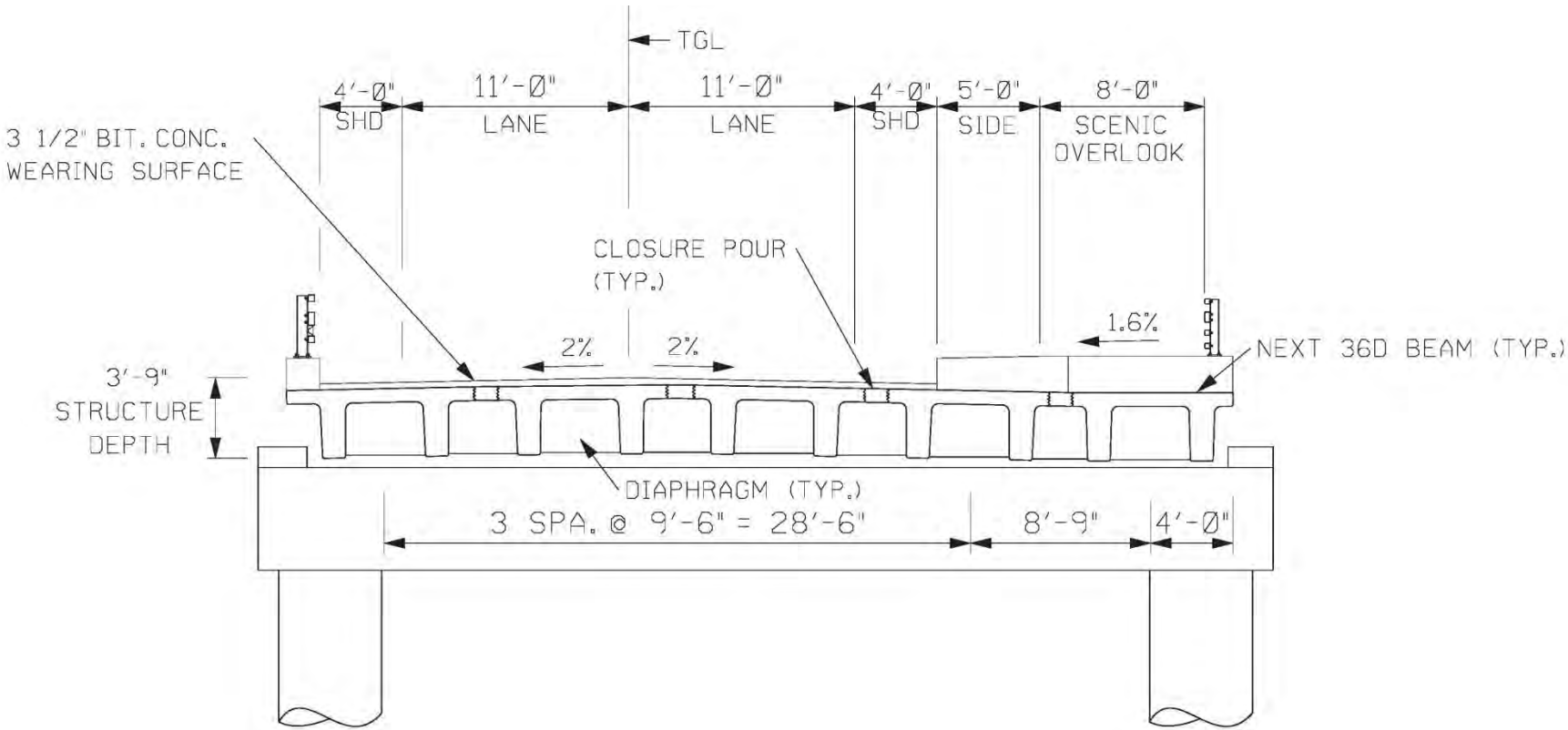

New Hampshire DOT
Department of Transportation

Review of Bascule Bridge

New Castle-Rye 16127
Preliminary Design

New Hampshire DOT
Department of Transportation

HDR Hoyle, Tanner & Associates, Inc.

New Castle-Rye 16127
Preliminary Design

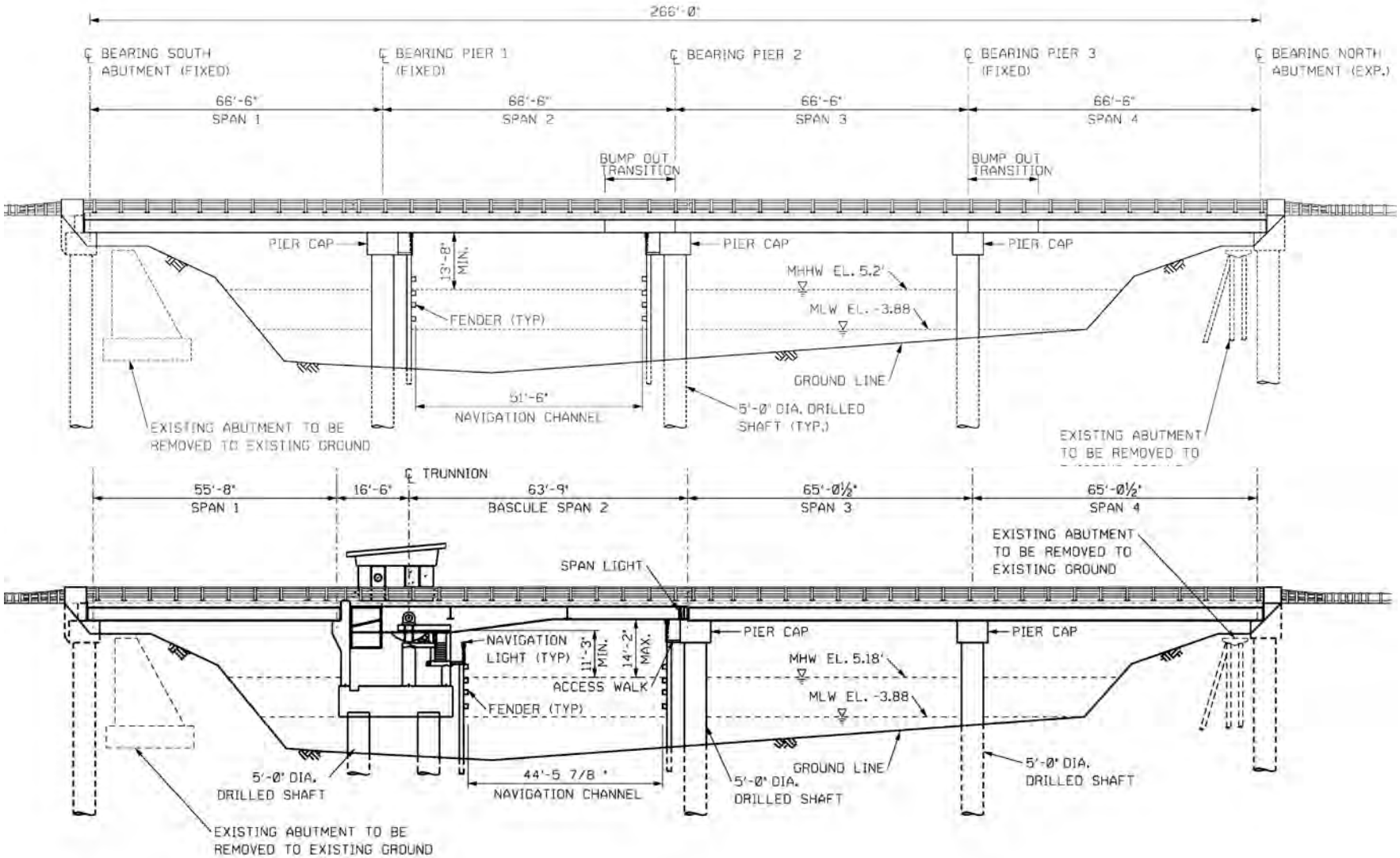

Fixed Bridge

- Pros
  - Lower Costs ($6.6 million capital cost)
  - Wider clearance for navigable channel than existing
- Cons
  - Does not maintain historic bridge type
  - Inconsistent with the USCG Bridge Permit for Goat Island Bridge
  - Restricts types of vessels that could be used for dredging
  - Restricts boat access due to height

Bascule Bridge

- Pros
  - Maintains historic bridge type
  - Consistent with the USCG Bridge Permit for Goat Island Bridge
  - Would not further restrict type of vessels that could be used for dredging
  - Does not further restrict boat access due to height
  - Wider clearance for navigable channel than existing
- Cons
  - Higher Costs ($16.6 million capital cost)

Comparison of Alternatives

Capital Cost comparisons

Alternative	Roadway Cost	Wall Cost	Bridge Cost	Engineering	Total
Bascule Bridge	$482,317	$280,000	$14,590,000	$1,230,000	$16,583,000
Fixed Bridge	$482,317	$280,000	$5,280,000	$528,000	$6,570,000

Moving Forward

- Review input gathered from this meeting
- NHDOT will Select Fixed or Bascule Bridge
- Bring forth to USCG, and submit for Bridge Permit
- Complete historic review process per Section 106
  - Submit Determination of Effect
  - Memorandum of Agreement
- Project advertised in 2017
- Construction to begin late 2017

Thank You