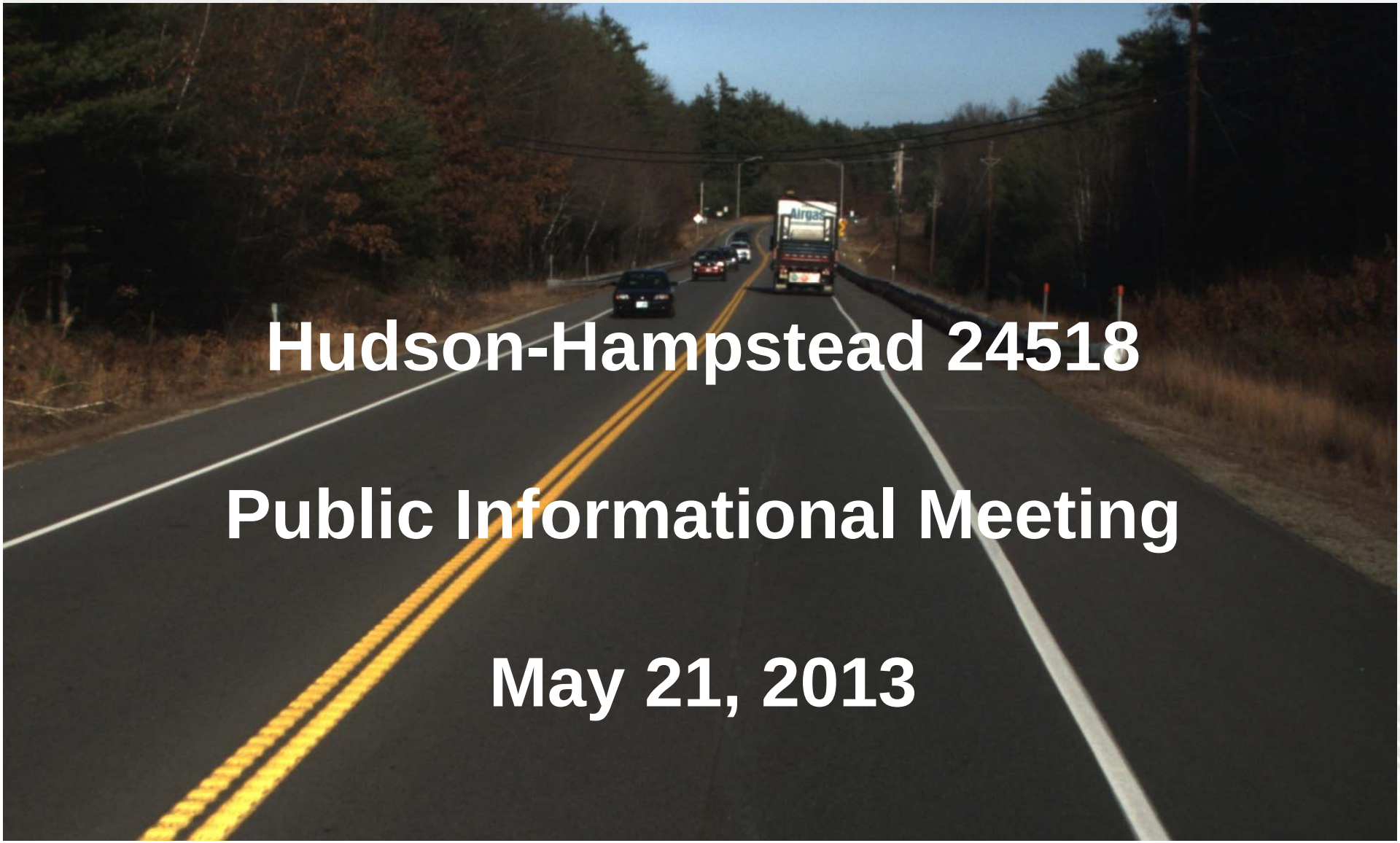

Hudson-Hampstead 24518

Public Informational Meeting

May 21, 2013

NH Route 111 just west of Sullivan Road

New Hampshire DOT Department of Transportation

Highway Safety Improvement Program (HSIP)

- $9.0 Million per year to NH
  - $500,000 set aside for rumble strip installation statewide
    - Mostly to replace existing locations that have been impacted by paving projects
  - Other efforts of this Program include median protection, guardrail replacements/upgrades, intersection improvements, road safety audits & surveillances

New Hampshire DOT Department of Transportation

Highway Safety Improvement Program (HSIP)

- **<u>Rumble Strips</u>** are one of the nine FHWA Proven Safety Countermeasures to address crashes that occur in the focus areas of intersections, pedestrians, and roadway departure

New Hampshire DOT Department of Transportation

Why install rumble strips/stripes?

Run off the road (ROR) crashes and head-on collisions due to fatigued, inattentive, or otherwise impaired drivers are a major contributor to New Hampshire's fatal and injury crashes. Rumble strips are placed as a countermeasure for driver error, rather than roadway deficiencies. Milled shoulder rumble strips/stripes (SRS) and milled centerline rumble stripes (CRS) are a low-cost safety measure that alerts drivers when they drift from their travel lane, providing an opportunity for the driver to maneuver their vehicle out of harms way.

Another recognized benefit of shoulder rumble strips/stripes is that they alert pedestrians and bicyclists of possible danger from errant vehicles approaching from behind that leave the travel way and enter the shoulder area.

New Hampshire DOT Department of Transportation

What does it sound like when rumble strips are driven on?

Passenger car driving over rumble strips

(First from outside the vehicle then inside then outside again)

Car.m4a

Commercial truck driving over rumble strips

(First from outside the vehicle then inside then outside again)

Commercial Truck.m4a

Courtesy FHWA Safety website

New Hampshire DOT Department of Transportation

NH Route 111 Crash Data – 2002 – 2011

Non Intersection Related

SEVERITY	2002	2003	2004	2005	2006	2007	2008	2009	2010	2011	Grand Total
Fatality				2				1	2		5
Incapacitating	1	1	2	1	4	2	1	1	3	1	17
Non-Incapacitating	10	13	14	10	16	9	16	12	13	7	120
Possible	6	6	5	4	4	2	2	5	4	5	43
Unknown	7	1	10	7	6	3	7	11	10	3	65
No Apparent Injury	39	22	12	34	64	61	79	81	99	53	544
Grand Total	63	43	43	58	94	77	105	111	131	69	794

ACD TYPE	2002	2003	2004	2005	2006	2007	2008	2009	2010	2011	Grand Total
Other Motor Vehicle	40	29	27	38	57	50	62	67	78	46	494
Motor Vehicle Crossing Median									1		1
Parked Motor Vehicle	2										2
Bicyclist								1			1
Pedestrian					1				1		2
Animal	5		3	9	10	2	11	14	15	6	75
Thrown or Falling Object	2				1	1	1		2		7
Other Object			1					2	2		5
Fixed Object	10	10	10	5	18	18	26	15	24	17	153
Overturn	1	1	1	3	3	4	3	4	1		21
Spill (2-wheel Vehicle)		1	1	1	2			1			6
Submersion								1			1
Jackknife					1						1
Other	3			2	1	2	2	4	6		20
Unknown		2						2	1		5
Grand Total	63	43	43	58	94	77	105	111	131	69	794

New Hampshire DOT Department of Transportation

NH Route 111 Crash Data
2002 – 2011
Non Intersection Related

OBJECT STRUCK	2002	2003	2004	2005	2006	2007	2008	2009	2010	2011	Grand Total
Sign Post	1	1			1	1	3	1			8
Guard Rail	5	6	4		7	5	9	5	9	8	58
Telephone/Electric Pole		1			1		1		1	1	5
Tree	1	2	2	2	2	3	4	1	5	1	23
Building						1					1
Bridge/Pier					1						1
Median								1		1	2
Barrier/Fence			2		3	1	1	1	3		11
Culvert/Headwall			1								1
Embankment/Ditch/Curb	2		1	2	2	3	4	3	4	1	22
Fire Hydrant/Parking Meter						1					1
Overpass										1	1
Rock/Sideslope	1			1	1		3				6
Other						3	1	3	2	4	13
Grand Total	10	10	10	5	18	18	26	15	24	17	153

New Hampshire DOT Department of Transportation

NH Route 111 Crash Summary 2002 – 2011

Non Intersection Related

- 794 Total Crashes in 10 years - ~8/year
- 5 Fatalities – 0.6%
- 494 Multiple vehicle – 62%
- 153 Run Off Road – 19%
- 250 Injury crashes – 31%

New Hampshire DOT Department of Transportation

Fatal Crash Reporting - DOS

New Hampshire Fatal Crashes 2013

January thru April

Impact Location / Roadway Departure

Case	Date	Vehicles Involved	Fatalities Resulted	Town	Route	FHE (First Harmful Event)
13-001	1/5/2013	1	1	Jaffrey	Fitzwilliam Road (100 ft North of Scott Pond Road)	Right Side Road Departure
13-002	1/12/2013	1	1	Seabrook	Ledge Road (2000 ft. West of London Lane)	Left Side Road Departure
13-003	1/21/2013	2	1	Plainfield	Route 12A (Near intersection of Freemen Road)	Centerline Encroachment (Snow Covered Roadway)
13-004	1/23/2013	2	1	Bristol	Route 104 1000 ft West of Homestead Restaruant	Centerline Encroachment (Solar Glare)
13-005	1/27/2013	2	4	Hillsborough	Route 9 1360 ft East of Route 202	Centerline Encroachment (Cause Unknown)
13-006	1/26/2013	2	1	N. Haverhill	Route 10 125 ft North of Petticoat Lane	Failure to Yield(Left turn from driveway across path)
13-007	2/5/2013	2	2	Alton	Route 28 3000 ft North of Quarry Road	Centerline Encroachment(Alcohol / Drug Related)
13-008	2/8/2013	1	1	Auburn	Route 28 Bypass 1732 ft North of Rattlesnake Hill Rd	Left Side Road Departure
13-009	2/10/2013	1	1	New Ipswich	Route 124 600 ft East of Spindleback Lane	Left Side Road Departure
13-010	2/15/2013	1	1	Portsmouth	Interstate 95 Mile Marker 14.2	Right Side Road Departure
13-011	2/8/2013	1	1	East Kingston	East Road 1 Mile South of Main Street	Left Side Road Departure
13-012	2/23/2013	2	1	Durham	Route 4 4000 Feet East of Main Street	Centerline Encroachment (Unsafe Lane Use)
13-013	2/27/2013	2	1	Milton	Route 125 (1362 White Mtn Highway)	Centerline Encroachment (Cause Unknown)
13-014	2/27/2013	2	1	Gorham	Route 16 1100 Ft North of Southern Cascade Flats	Centerline Encroachment (Possible Medical Event)
13-015	3/11/2013	1	1	Candia	Route 101 300 Feet West of MM 109.2	Left Side Road Departure
13-016	3/16/2013	1	1	Newmarket	North Main Street near intersection of Bay Road	Right Side Road Departure
13-017	3/16/2013	1	1	Raymond	Chester Road Node 0020 250 ft to Node 0021	Left Side Road Departure
13-018	3/24/2013	1	1	Meredith	Route 25 (in front of #182)	Left Side Road Departure
13-019	3/30/2013	1	1	Manchester	Interstate 293 Exit 4 NB	Right Side Road Departure
13-020	4/3/2013	2	1	Milan	Route 110 2500 ft. West of York Pond Road	Centerline Encroachment (Cause Unknown)
13-021	4/5/2013	1	1	Belmont	Route 106 600 ft South of Stone Road	Left Side Road Departure
13-022	4/7/2013	2	1	Claremont	Main Street 800 ft North of North Street	Centerline Encroachment (Alcohol Related)
13-023	4/14/2013	1	1	Jaffrey	Route 202 750 ft North of Childrens Woods	Left Side Road Departure
13-024	4/14/2013	1	1	Farmington	Hornetown Road in front of #289	Left Side Road Departure
13-025	4/19/2013	1	1	Laconia	Messer Street & Opeechee Street	Left Side Road Departure
13-026	4/20/2013	2	2	Amherst	Route 101 & Schoolhouse Road	Centerline Encroachment (turning left)
13-027	4/24/2013	1	1	Winchester	Fullum Pond Road 1000 ft South Old Chesterfield Rd	Left Side Road Departure

Centerline Encroachment = 10/27 = 37%
Left Side Road Departure = 12/27 = 44%

81% of Fatal Crashes Involved Drivers Crossing the Centerline

96% of Fatal Crashes are considered Run-Off-The-Road by FHWA criteria.

New Hampshire DOT Department of Transportation

Established NHDOT Guidelines

- Developed in 2008
  - In response to public comments about installation practices
  - Combined effort:

    Highway Design, Construction, Traffic, Highway Maintenance, Rail & Transit, FHWA, and Environment
  - Guidelines being reevaluated at this time to allow a systemic approach to roadway selection and installation

New Hampshire DOT Department of Transportation

Federal Highway Guidelines

There are two main applications of rumble strips:

- Centerline Rumble Strips − an effective countermeasure to prevent head-on collisions and opposite-direction sideswipes, often referred to as cross-over or cross-centerline crashes. Primarily used to warn drivers whose vehicles are crossing centerlines of two-lane, two-way roadways.

- Shoulder Rumble Strips − an effective means of preventing run-off-the-road crashes. They are primarily used to warn drivers they have drifted from their lane. A variation on this is the edge line rumble stripe, which places the pavement marking within the rumble strip, improving the visibility of the marking.

New Hampshire DOT Department of Transportation

Federal Highway Guidelines

The main cause of roadway departure crashes is driver drowsiness and inattention

- driving too fast
- alcohol and drugs
- cell phones
- other distractions within the vehicle

•Driver fatigue can be induced by highway hypnosis

- occurs when the lines and stripes on long, stretches of highway reduce the driver's concentration.

•Rumble strips are also helpful in alerting drivers to the lane limits where conditions such as rain, fog, snow or dust reduce driver visibility.

New Hampshire DOT Department of Transportation

Federal Highway Guidelines

- Roadway departure fatalities, which include runoff-the-road (ROR) and head-on fatalities, are a serious problem in the United States. In 2003, there were 25,562 roadway departure fatalities, accounting for 55 percent of all roadway fatalities in the United States. That same year:
  - More than 16,700 people died in ROR crashes (39 percent of all roadway fatalities).
  - Head-on crashes 12 percent of all fatal crashes

Source: FHWA website
http://www.fhwa.dot.gov/research/deployment/rumblestrips.cfm

New Hampshire DOT Department of Transportation

Currently in place in NH…

- Shoulders
  - Interstates and Turnpikes
  - US202/NH9 – Henniker & Hopkinton
  - NH 101 – Auburn to Exit 10 in Exeter
- Centerline
  - US202/NH9 – Henniker & Hopkinton.
  - NH 16 – Rochester to Ossipee
  - NH 101 – Milford & Amherst
  - NH 111 – Hudson (will be replaced this Spring)
    - Hudson Park Drive to Sullivan Road (1.7 miles)
    - Originally installed Fall of 2000

New Hampshire DOT Department of Transportation

As a Minimum, the Following Conditions Must Apply…

- Highway segment has a speed limit of 50 MPH or greater with limited or controlled access.
- Highway segment should have a minimum of 4’ wide shoulders
- Highway segment has an accident history (crossing the centerline), greater than the State average.

New Hampshire DOT Department of Transportation

Minimum Conditions… Cont'd

- ADT should be greater than 5000 vpd
- Existing Pavement must be in good condition so that the installation of CRS will not cause future pavement delamination.
- Minimum depth of the existing wearing course should be 1-1/4 inches
- Any highways that do not meet all of the above conditions will require an engineering analysis and Chief Engineer Approval. .

New Hampshire DOT Department of Transportation

Minimum Conditions… Cont'd

And Lastly…

- A public informational meeting will be held and concurrence from the local officials should be obtained.

New Hampshire DOT Department of Transportation

Project Limits

Begin just west of Kimball Hill Road in Hudson and proceed 7.6 miles east to a point just west of Wall Street in Windham (CRS & SRS)

Omit stretch in the vicinity of Exit 3 and the ongoing Interstate 93 construction projects for the time being

Begin 0.4 miles east of the NH Route 28 intersection in Windham and proceed 10.8 miles east to a point just east of Mill Road in Kingston (CRS & SRS)

New Hampshire DOT Department of Transportation

To Be Considered…

- Posted Speed limits – 35 to 50 MPH
- Traffic Volumes – 16,000 VPD
- Passing Zones – 8
- Shoulder Width – Varies - 1 to 8 feet
- Condition & Thickness of Pavement
- Residential Areas
- Bicyclists

New Hampshire DOT Department of Transportation

Design Details

- Centerline 12 inches wide

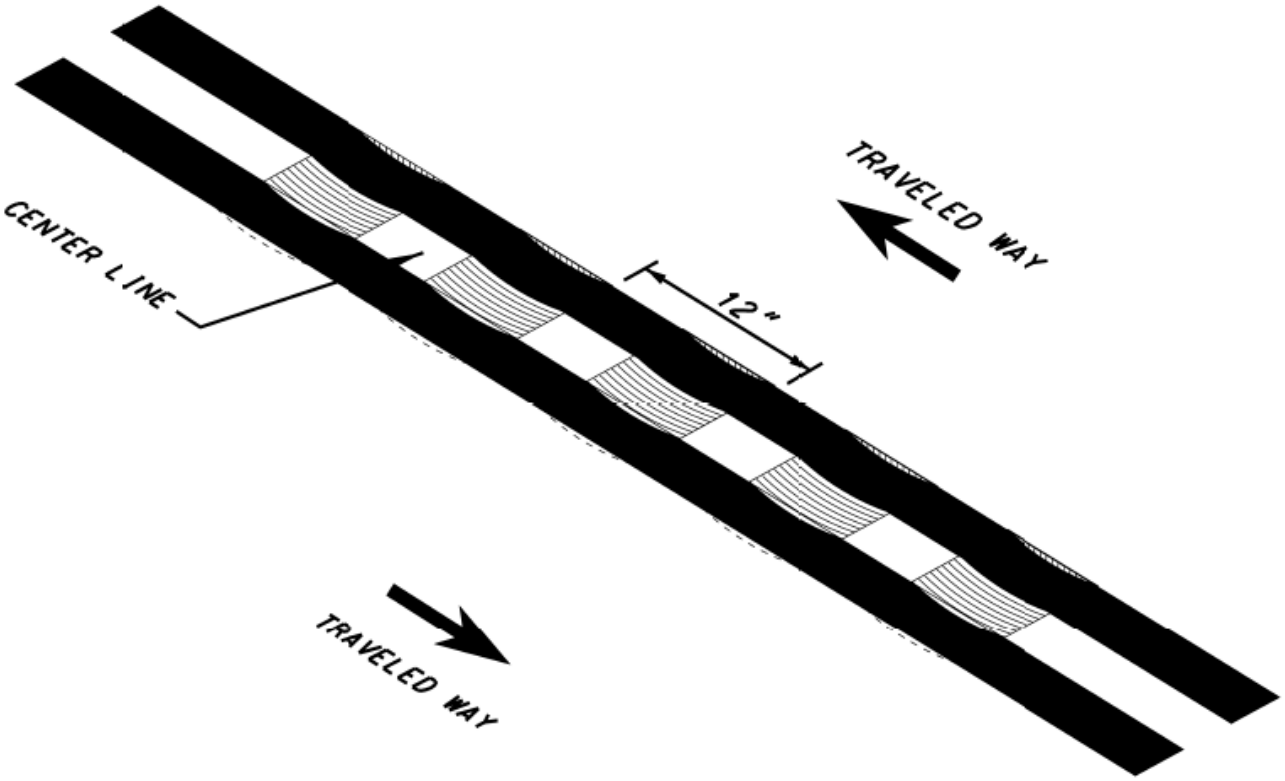

TYPICAL CENTERLINE
INSTALLATION DETAIL

New Hampshire DOT Department of Transportation

Design Details

- Centerline

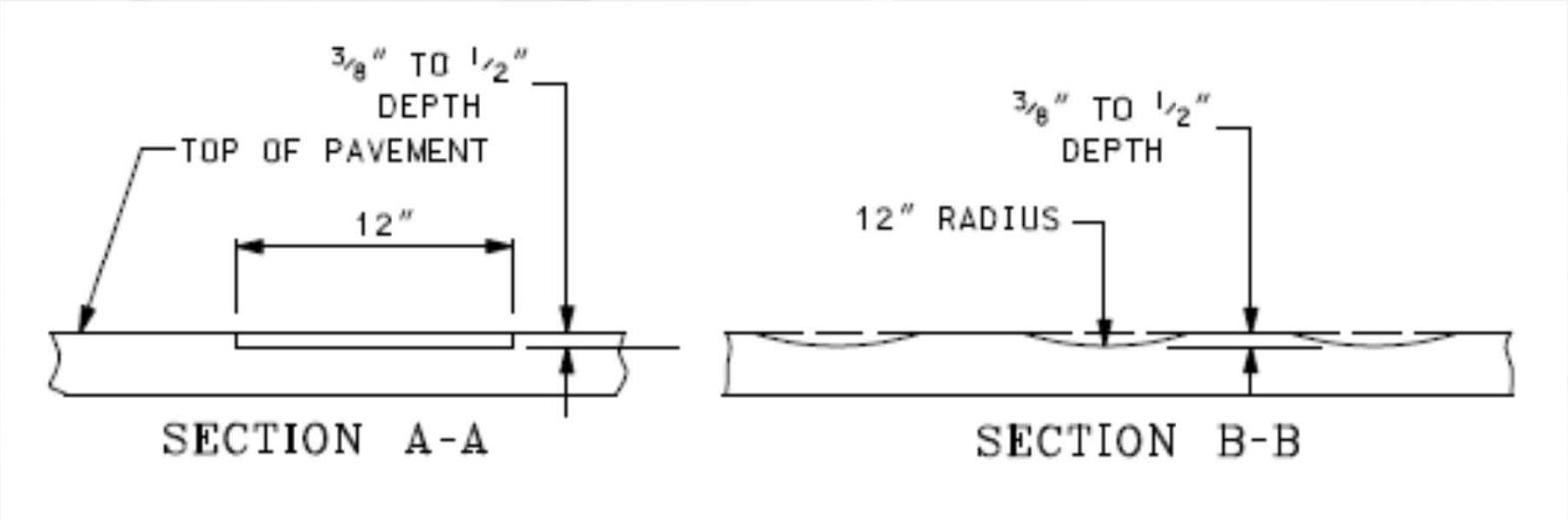

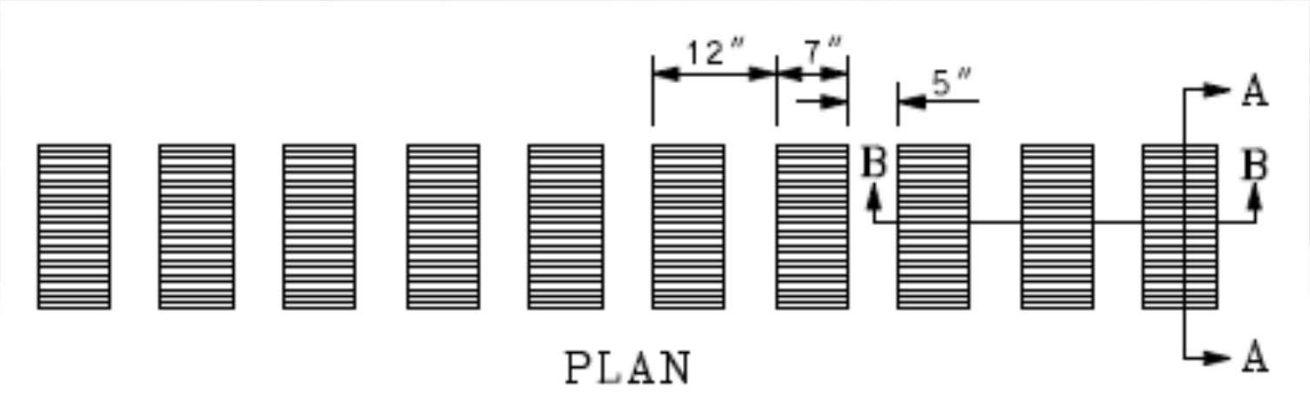

Design Details

- Shoulder 12 inches wide

*16 inches wide on Interstates and Divided Highways

- Rumble Stripes will begin ON the white lane line and the remainder will be within the shoulder

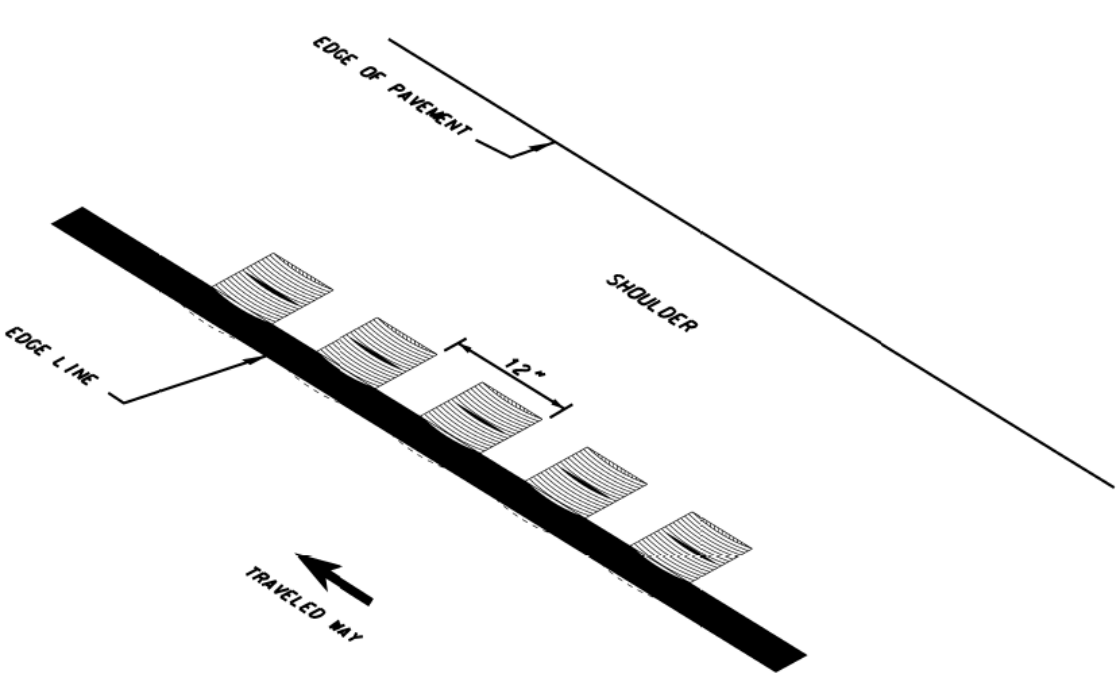

TYPICAL SHOULDER
RUMBLE STRIPE
INSTALLATION DETAIL

New Hampshire DOT
Department of Transportation

Design Details

- Shoulders

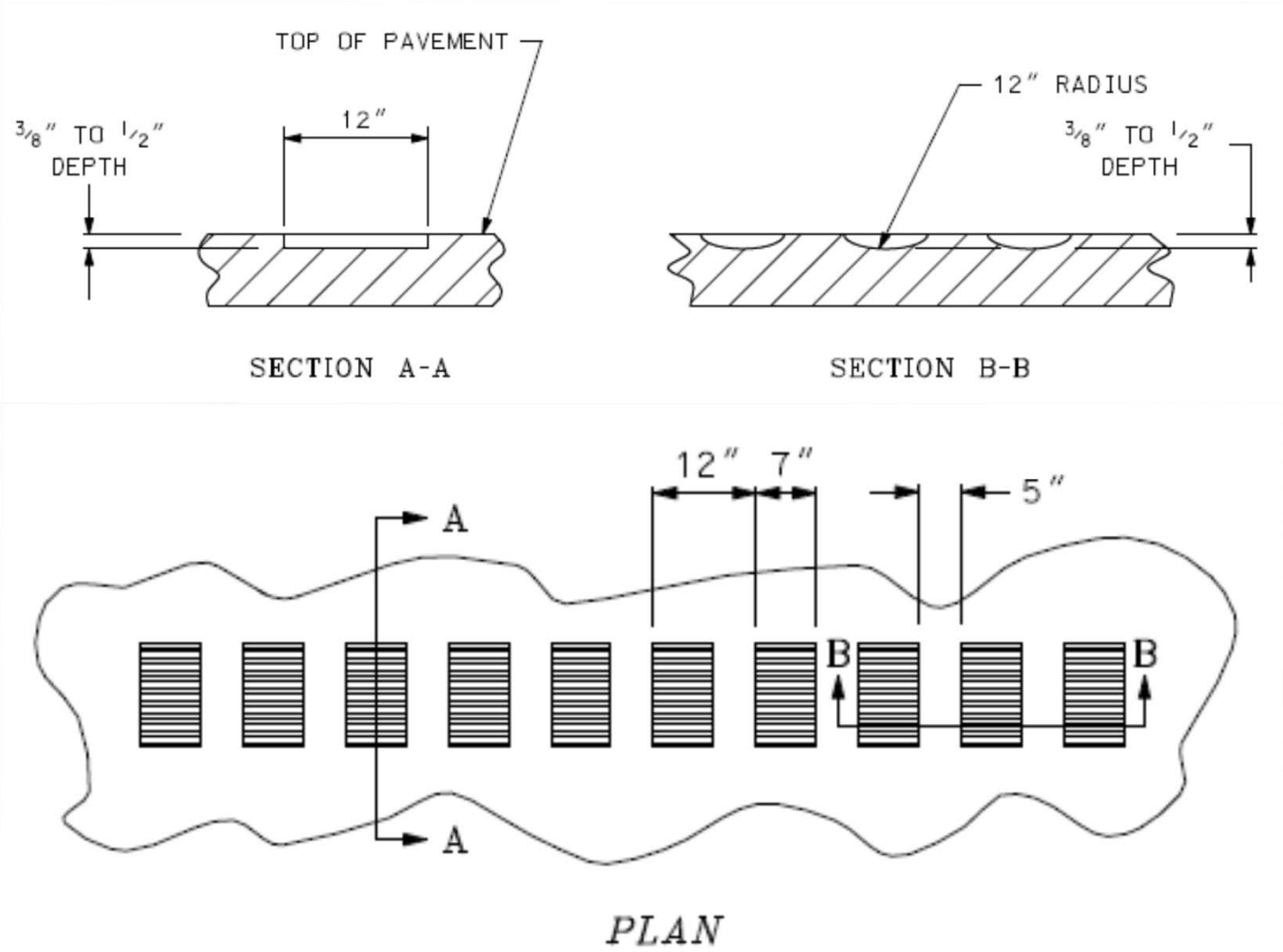

Design Details

- Rumble Stripes will be directly beneath the edge line so that the left edge of the rumble stripe is concurrent with the left edge of the edge line.
- Where bicycle traffic is anticipated;
  - Provide a minimum 4’ clear area from rumble strip/stripe to edge of pavement.
  - Provide a minimum 5’ clear area from rumble strip/stripe to edge of pavement where vertical obstructions are present (guardrail or curbing).
  - Provide gaps of 12’ in the shoulder rumble strips/stripes every 48’ unless other breaks for major drives or sideroads are provided.

New Hampshire DOT Department of Transportation

New Hampshire DOT
Department of Transportation

New Hampshire DOT
Department of Transportation

Benefits to Rumble "Stripes"

- Improved nighttime visibility
- Increased reflectivity under wet road conditions
- Increased longevity of the pavement markings
- Inclement weather navigational aid

- Second location chosen in the State to install shoulder rumble stripes
- First was Franconia Notch Parkway

New Hampshire DOT Department of Transportation

Approximate Costs

- Centerline @ $2,000/mile
- Shoulder @ $1,300/mile

New Hampshire DOT Department of Transportation

Pathways Pavement Van

- Pathways.lnk

Personal Note

My nephew was recently involved in a head-on collision with another vehicle. He and all other parties survived…

In my professional opinion, I believe rumble strips could have prevented this

New Hampshire DOT Department of Transportation

Questions?
New Hampshire
DOT
Department of Transportation