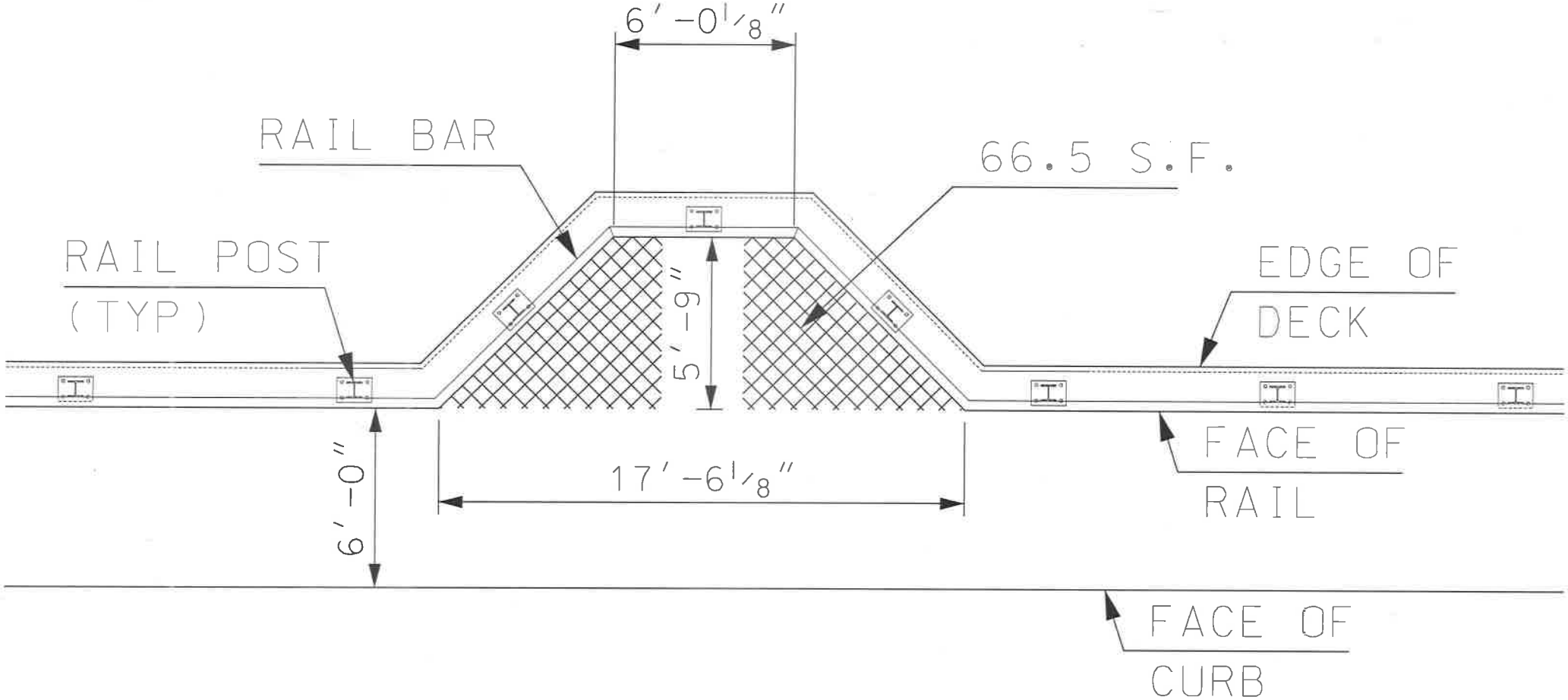

12210Chrd.dgn Default 6/3/2018 11:08:44 AM "n18wpa"