STATE OF NEW HAMPSHIRE
DEPARTMENT OF TRANSPORTATION

CONSTRUCTION PLANS
FEDERAL AID
BRIDGE REPLACEMENT PROJECT

X-A001(202)
N.H. PROJECT NO. 16236
US ROUTE 4 OVER BUNKER CREEK
BRIDGE NO. 145/116

DESIGN DATA

AVERAGE DAILY TRAFFIC 20 -	-
AVERAGE DAILY TRAFFIC 20 -	-
PERCENT OF TRUCKS	-
DESIGN SPEED	45 MPH
LENGTH OF PROJECT	1665 FT

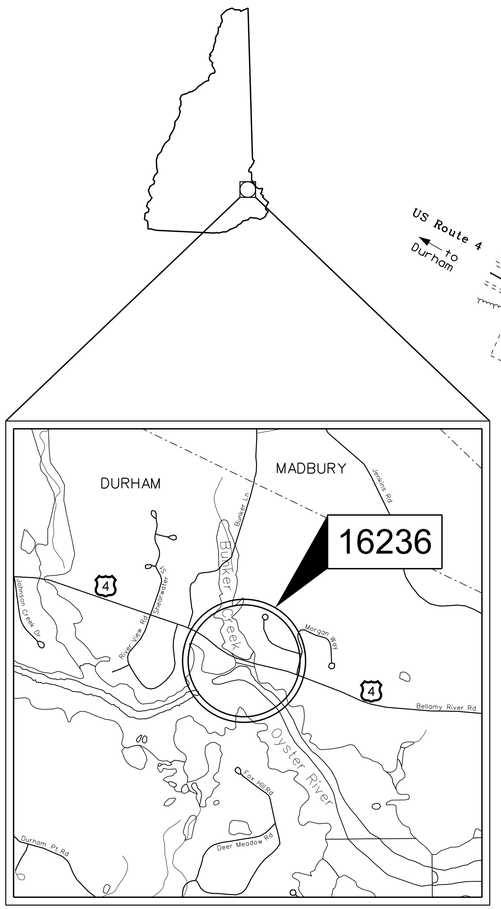

LOCATION MAP

1/2 1/8 0 1/4 1/2 mi.

GRAPHIC SCALE

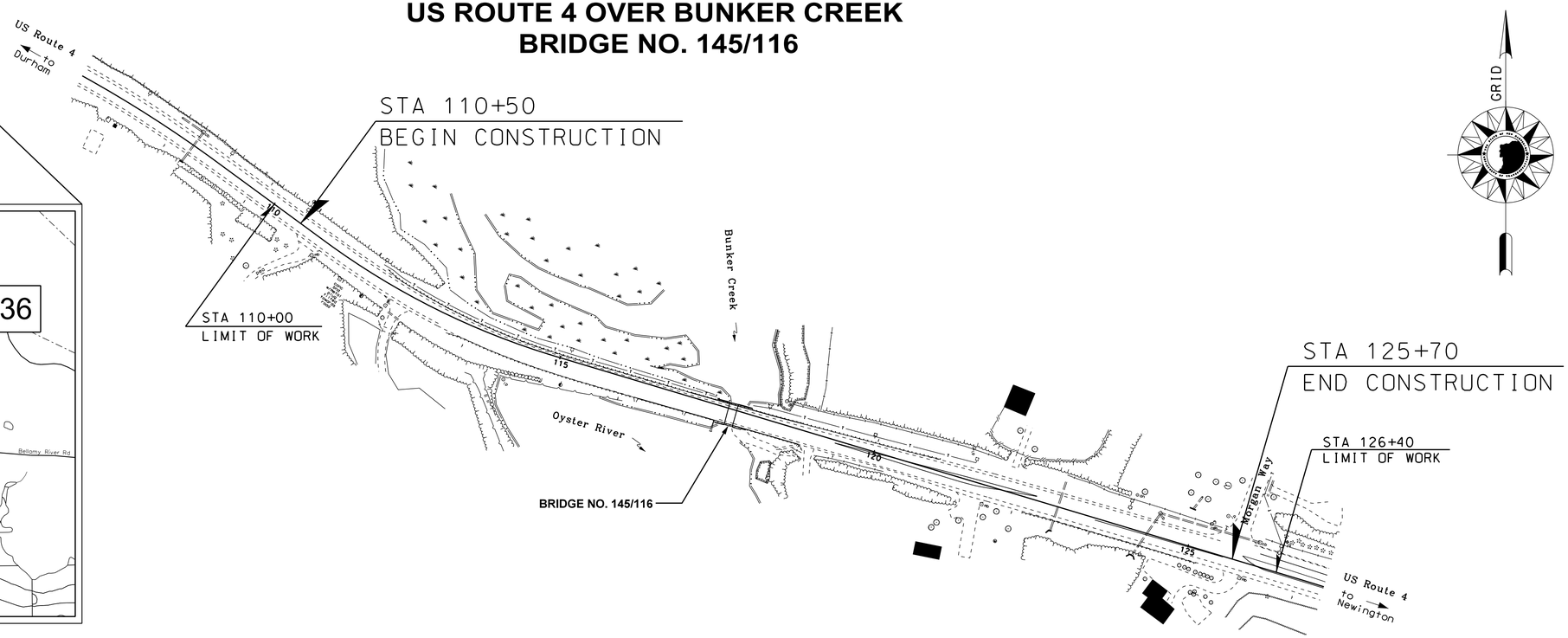

PRELIMINARY SUBMISSION

TOWN OF DURHAM

COUNTY OF STRAFFORD

SCALE: 1" = 100'

PRELIMINARY PLANS
SUBJECT TO CHANGE
DATE 1/29/2018

GM2 Associates, Inc.
197 Loudon Road, Suite 310
Concord, NH 03301

Tel: 603-856-7854
Fax: 603-856-7855

NHDOT THE STATE OF NEW HAMPSHIRE DEPARTMENT OF TRANSPORTATION

RECOMMENDED FOR APPROVAL:

DIRECTOR OF PROJECT DEVELOPMENT — DATE

ADMINISTRATOR, BUREAU OF MUNICIPAL HIGHWAYS — DATE

APPROVED:

ASSISTANT COMMISSIONER AND CHIEF ENGINEER — DATE

U. S. DEPARTMENT OF TRANSPORTATION
FEDERAL HIGHWAY ADMINISTRATION

APPROVED:

DIVISION ADMINISTRATOR — DATE

FEDERAL PROJECT NO.	STATE PROJECT NO.	SHEET NO.	TOTAL SHEETS
X-A001(202)	16236	1	18

DRAWN BY: M. CUMMINGS DATE 09/17

CHECKED BY: J. MERCER DATE 09/17

DESIGN

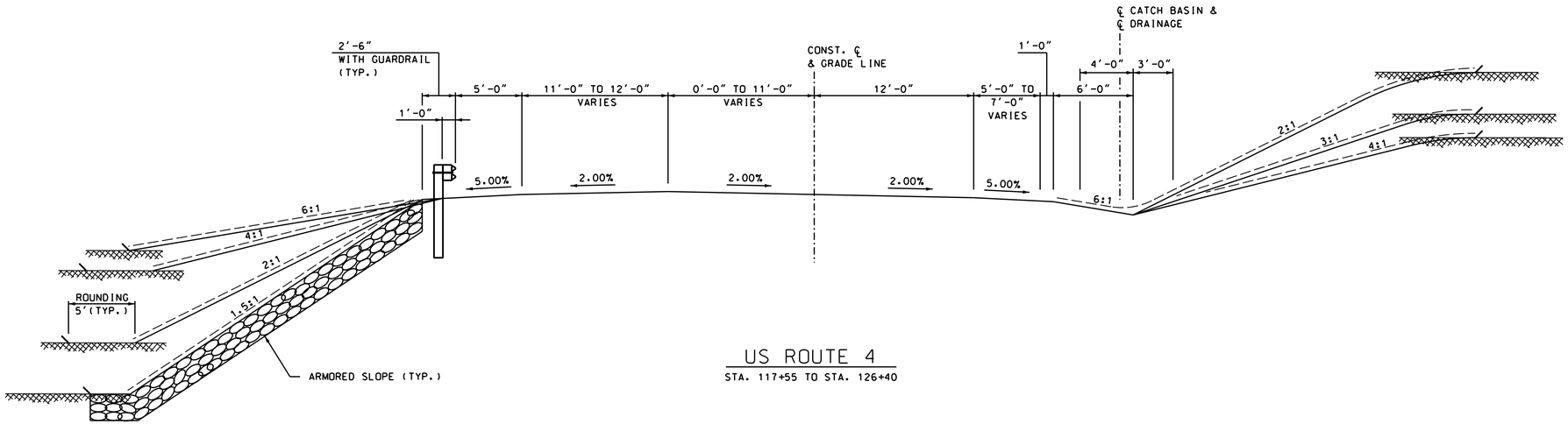

US ROUTE 4

STA. 117+55 TO STA. 126+40

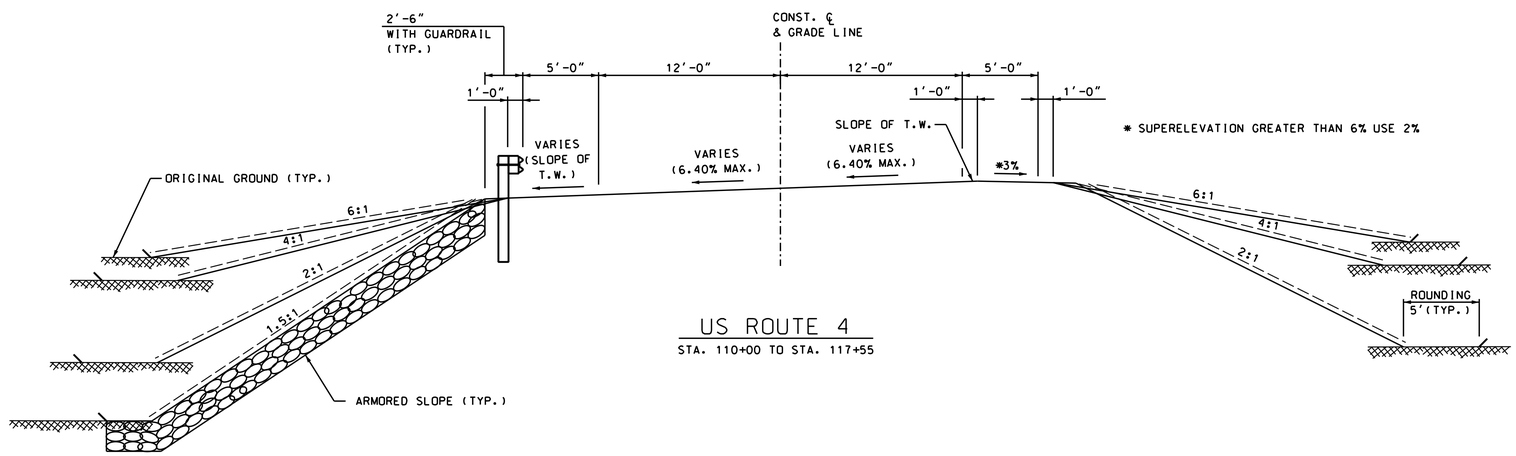

US ROUTE 4

STA. 110+00 TO STA. 117+55

PRELIMINARY PLANS
SUBJECT TO CHANGE
DATE 01/25/2018

GM2 ASSOCIATES

STATE OF NEW HAMPSHIRE

DEPARTMENT OF TRANSPORTATION ∘ BUREAU OF HIGHWAY DESIGN

TYPICAL SECTIONS

DGN	STATE PROJECT NO.	SHEET NO.	TOTAL SHEETS
16236typ01.dgn	16236	2	18

REVISIONS AFTER PROPOSAL

NUMBER	DATE	STATION	STATION	DESCRIPTION

SDR PROCESSED NAME1 DATE DATE1
NEW DESIGN NAME2 DATE DATE2
SHEET CHECKED NAME3 DATE DATE3

AS BUILT DETAILS DATE

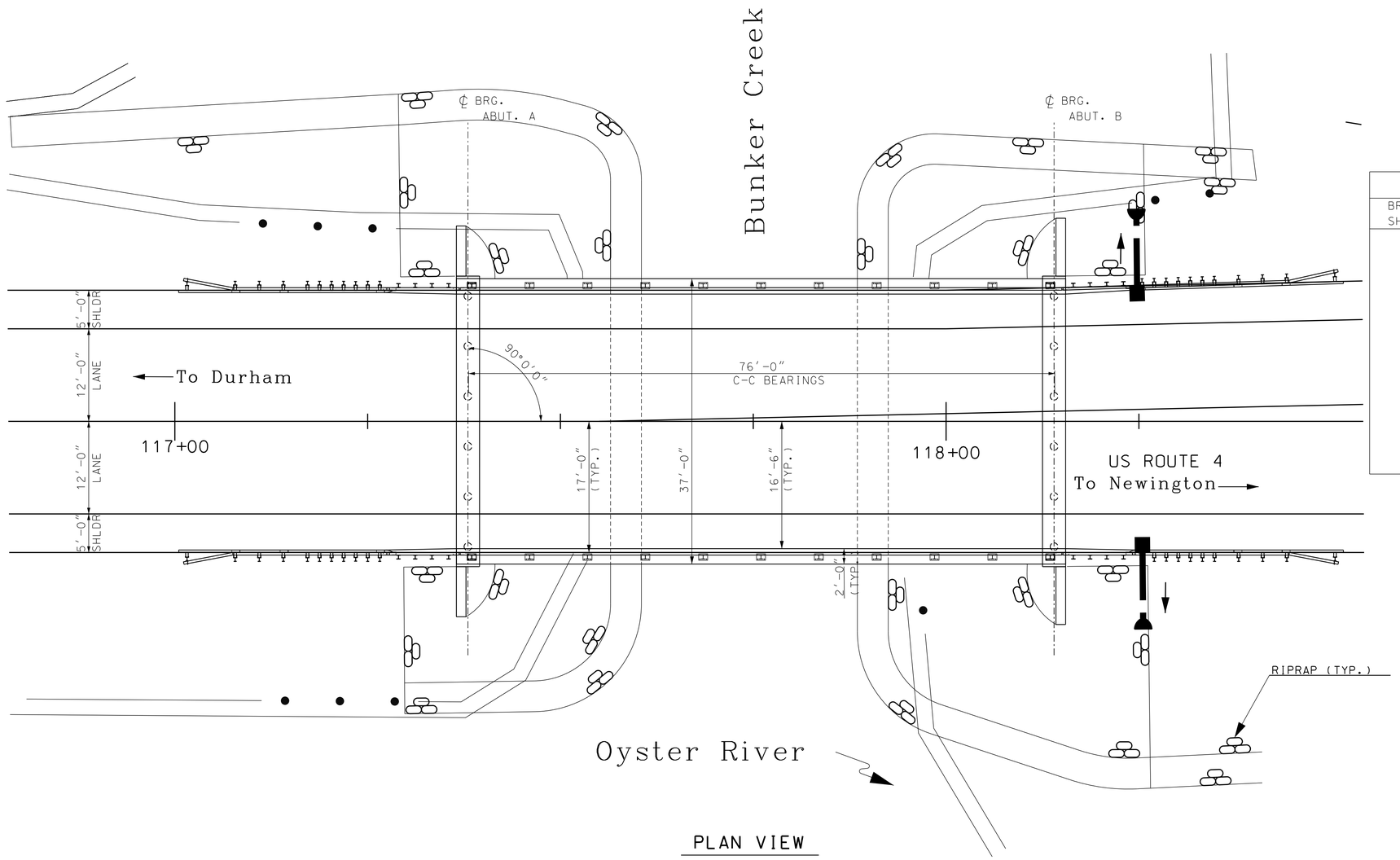

PLAN VIEW

SCALE: 1/8" = 1'-0"

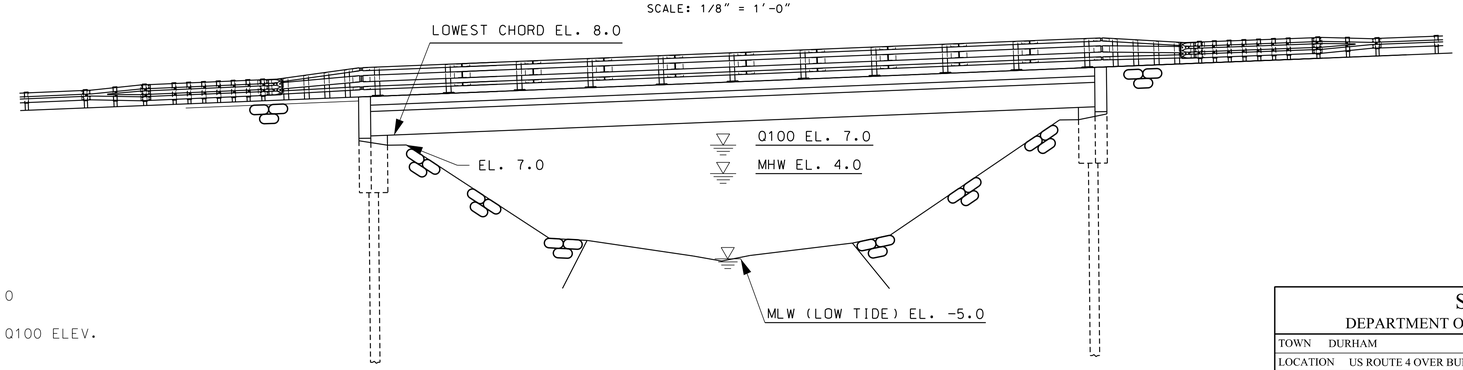

ELEVATION

SCALE: 1/8" = 1'-0"

HYDRAULIC DATA

1.	DRAINAGE AREA:	0.57 SQ. MI.
2.	DESIGN FLOOD:	Q100 = 604 CFS
3.	DESIGN VELOCITY:	5.43 FPS
4.	DESIGN FLOOD ELEVATION:	Q100 ELEV. = 7.0
5.	BRIDGE WATERWAY OPENING:	532.3 SF BELOW Q100 ELEV.

INDEX OF BRIDGE SHEETS

BRIDGE SHEET NO.	DESCRIPTION
1	GENERAL PLAN AND ELEVATION
2	SITE PLAN AND PROFILE
3	BORING LOGS (1 OF 13)
4	BORING LOGS (2 OF 13)
5	BORING LOGS (3 OF 13)
6	BORING LOGS (4 OF 13)
7	BORING LOGS (5 OF 13)
8	BORING LOGS (6 OF 13)
9	BORING LOGS (7 OF 13)
10	BORING LOGS (8 OF 13)
11	BORING LOGS (9 OF 13)
12	BORING LOGS (10 OF 13)
13	BORING LOGS (11 OF 13)
14	BORING LOGS (12 OF 13)
15	BORING LOGS (13 OF 13)
16	ABUTMENT A & TYPICAL BRIDGE SECTION

PRELIMINARY PLANS
SUBJECT TO CHANGE
DATE 1/29/2018

STATE OF NEW HAMPSHIRE
DEPARTMENT OF TRANSPORTATION * BUREAU OF BRIDGE DESIGN

TOWN DURHAM | BRIDGE NO. 145\116 | STATE PROJECT 16236

LOCATION US ROUTE 4 OVER BUNKER CREEK

GENERAL PLAN AND ELEVATION

BRIDGE SHEET 1 OF

FILE NUMBER -

REVISIONS AFTER PROPOSAL		BY	DATE		BY	DATE
	DESIGNED	TPL	07/17	CHECKED	DLB	07/17
	DRAWN	TEM	10/17	CHECKED	TPL	10/17
	QUANTITIES	---	XX/XX	CHECKED	---	XX/XX

GM2 ASSOCIATES

SUBDIRECTORY	.DGN LOCATOR	SHEET SCALE
Prelim	16236GENPLAN	AS NOTED

ISSUE DATE	FEDERAL PROJECT NO.	SHEET NO.	TOTAL SHEETS
REV. DATE	X-A001(202)	3	18

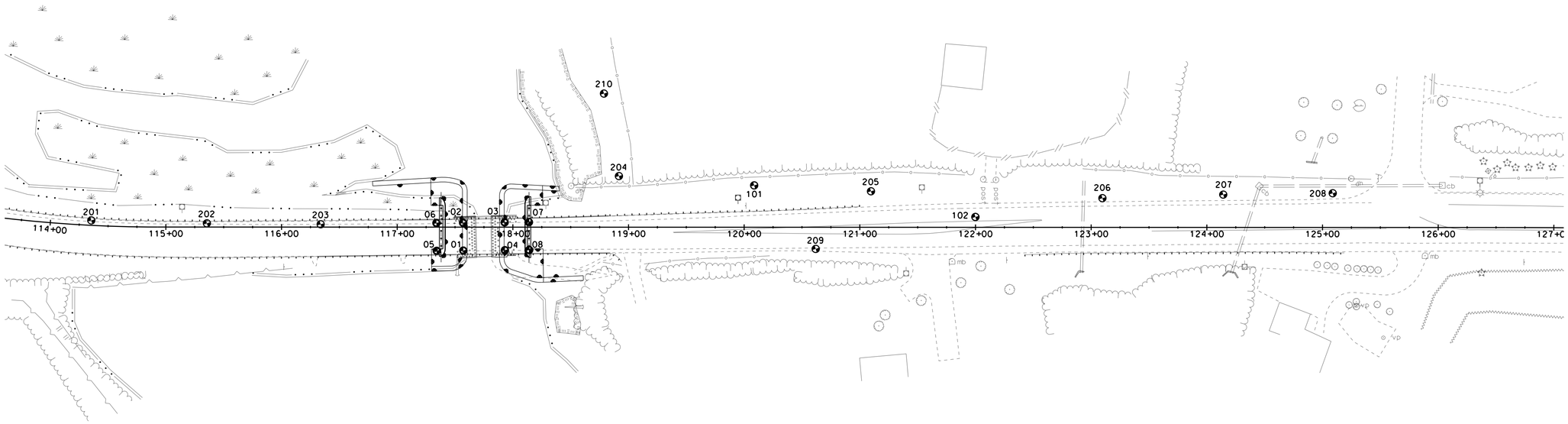

BORING NOTES

(1) BORINGS INDICATED THUS ⊕ WERE DRILLED BY THE NHDOT IN 2014. FIGURES IN THE "BLOWS PER" COLUMN INDICATE THE NUMBER OF BLOWS REQUIRED TO DRIVE A 2" STANDARD SPLIT SPOON SAMPLER 6", USING A 140 LB. WEIGHT FALLING 30 INCHES. GEOTECHNICAL INFORMATION IS AVAILABLE ON-LINE ON THE "INVITATION TO BID" WEB PAGE AT NHDOT.COM IN THE PROJECT'S PROPOSAL PACKAGE.

(2) BORINGS ARE FOR DESIGN PURPOSES SHOWING CONDITIONS AT BORING POINTS ONLY, AND DO NOT NECESSARILY INDICATE MATERIAL TO BE ENCOUNTERED DURING CONSTRUCTION.

(3) THE SOILS REPORT IS AVAILABLE IN THE NHDOT BUREAU OF MATERIALS AND RESEARCH OFFICE. SEE PROSECUTION OF WORK FOR MORE INFORMATION.

(4) THE WATER LEVELS INDICATED WERE MEASURED AT TIME OF EXPLORATION. WATER LEVELS ENCOUNTERED DURING CONSTRUCTION MAY VARY CONSIDERABLY DUE TO PREVAILING CLIMATE, RAINFALL OR OTHER FACTORS.

(5) THE SURFACE ELEVATION ON EACH BORING LOG IS THE ELEVATION OF THE EXISTING GROUND AT THE TIME THE BORING WAS TAKEN.

(6) NORTHING AND EASTING COORDINATES REFERENCE THE NORTH AMERICAN DATUM OF 1983/1986 AND ELEVATIONS REFERENCE THE NATIONAL GEODETIC VERTICAL DATUM OF 1929.

BORING LOCATIONS

NO.	STATION	OFFSET	NORTHING	EASTING
01	117+57	RT 20'	231868	1192590
02	117+57	LT 4'	231891	1192596
03	117+93	LT 4'	231881	1192631
04	117+93	RT 20'	231858	1192624
05	117+34	RT 20'	231874	1192568
06	117+34	LT 4'	231897	1192574
07	118+14	LT 4'	231876	1192651
08	118+14	RT 20'	231852	1192644
101	120+09	LT 36'	231849	1192846
102	122+00	LT 9'	231769	1193022
201	114+35	LT 4'	231985	1192289
202	115+35	LT 3'	231954	1192384
203	116+34	LT 2'	231925	1192478
204	118+92	LT 44'	231891	1192737
205	121+10	LT 31'	231816	1192942
206	123+10	LT 25'	231753	1193132
207	124+14	LT 28'	231726	1193233
208	125+09	LT 30'	231700	1193324
209	120+62	RT 19'	231782	1192882
210	118+79	LT 115'	231963	1192745

PRELIMINARY PLANS
SUBJECT TO CHANGE
DATE 1/29/2018

GM2 ASSOCIATES

SUBDIRECTORY	.DGN LOCATOR	SHEET SCALE
BRD/Details	16236BoringLayout	1" = 50'

STATE OF NEW HAMPSHIRE
DEPARTMENT OF TRANSPORTATION * BUREAU OF BRIDGE DESIGN

TOWN DURHAM BRIDGE NO. 145\116 STATE PROJECT 16236

LOCATION US ROUTE 4 OVER BUNKER CREEK

BORINGS SHEET (1 OF 13)

REVISIONS AFTER PROPOSAL		BY	DATE		BY	DATE
	DESIGNED	BAW	1/15	CHECKED	TPL	5/15
	DRAWN	TEM	10/17	CHECKED	TPL	10/17
	QUANTITIES	---	---	CHECKED	---	---

ISSUE DATE	FEDERAL PROJECT NO.	SHEET NO.
REV. DATE	X-A001(202)	4

BRIDGE SHEET 3 OF
FILE NUMBER -
TOTAL SHEETS 18

TEST BORING REPORT

STATE OF NEW HAMPSHIRE DEPARTMENT OF TRANSPORTATION
MATERIALS & RESEARCH BUREAU - GEOTECHNICAL SECTION

PROJECT NAME **DURHAM 16236** BRIDGE NO. 145/116
DESCRIPTION US Route 4 over Bunker Creek

BORING NO. **B01**
SHEET NO. 1 OF 3
STA. 117+57 OFF. RT 12
BASELINE US Route 4
ELEVATION (ft) 8.0
START/END 8/4/14 / 8/6/14
DRILLER P. Huckins (NHDOT)
INSPECTOR Scott Myers
CLASSIFIER SFM
EAST/NORTH (ft) 1192590/231868

GROUNDWATER					EQUIPMENT	SAMPLER	CASING	CORE
DATE	TIME	DEPTH (ft)	ELEV. (ft)	BOTTOM OF CASING	BOTTOM OF HOLE	TYPE:	S	NW	NX
		Tidal				SIZE I.D. (in):	1.375	3	1.875
						HAMMER WT. (lb):	140	DRILL RIG	
						HAMMER FALL (in):	30	CME 45-B Truck	
						HAMMER TYPE:	Automatic		

DEPTH (ft)	STRATUM CHANGE (ft) DEPTH	ELEVATION	BLOWS PER 0.5 ft	SAMPLE NUMBER	SAMPLER RECOVERY (ft) [%]	DEPTH RANGE (ft)	FIELD CLASSIFICATION AND REMARKS	STRATUM SYMBOL
0							-ASPHALT PAVEMENT-	
	1.0	7.0	11 9 11 9	S1	1.3 [65]	1.0–3.0	Medium dense, black bituminous saturated MEDIUM - FINE SAND, little gravel, trace coarse sand, trace silt to 1.5' then light yellow brown, FINE SAND, some gravel, little coarse - medium sand, trace silt	
			7 6 5 5	S2	1.0 [50]	3.0–5.0	Medium dense, MEDIUM - FINE SAND, little gravel, little coarse - medium sand	
5							-FILL-	
			7 6 4 1	S3	0.4 [20]	5.0–7.0	Loose, light yellow brown, COARSE - FINE SAND, trace gravel	
			WOH WOH WOH 1	S4	1.4 [70]	7.0–9.0	Very soft, dark grayish brown & greenish gray, SILT, little clay, trace organic matter, little fine sand (Mix)	
			WOH 5 12 6	S5	1.3 [65]	9.0–11.0	Medium dense, dark greenish gray, SILT, little clay, trace coarse - fine sand, trace gravel, trace organic matter (Mix), w/ cobbles evident	
10			1 2 1 6	S6	1.0 [50]	11.0–13.0	Very loose, similar colors, mix of SILT, little clay, trace organic matter, little fine sand, trace coarse - medium sand, trace wood, occasional trace gravel	
			1 2 1 1	S7	1.0 [50]	13.0–15.0	Soft, greenish gray w/ dark gray zones, SILT, little clay, little fine sand, trace coarse - medium sand, trace fine gravel	
			2 1 1 2	S8	0.1 [5]	15.0–17.0	Soft, very poor sample, likely similar to above with evidence of SILT, trace organic matter (Mucky) zones & wood	
15			6 4 2 2	S9	0.9 [45]	17.0–19.0	Black & greenish gray, similar to S8	
	18.0	-10.0					Dark olive gray, SILT, little & trace clay, trace organic matter, trace fine sand	
			2 1 1 1	S10	0.4 [20]	19.0–21.0	Soft, dark olive gray, SILT, strong trace clay, trace organic matter, trace fine sand	
20							-TIDAL MARINE DEPOSIT-	
			1 1 1 0	S11	1.1 [55]	21.0–23.0	Soft, dark olive gray, similar to S10	
			1 1 1 1	S12	0.0 [0]	23.0–25.0	Soft, likely similar to S10	
25			1 1 2 5	S13	1.5 [75]	25.0–27.0	Similar to S10	
	26.0	-18.0					Dark gray w/ black stains, SILT, little clay w/ silty CLAY, trace organic matter, trace fine sand, organic fibers/ tissue present, w/ occasional fine sandy seam	
			3 5 6 7	S14	0.0 [0]	27.0–29.0	Stiff, wash indicates soil similar to low end of S13	
							-MARINE DEPOSIT-	

Sampler	Identification
S	Standard Split Spoon
SL	Large Spoon (O.D.= 3 in)
T	Thin Wall Tube
U	Undisturbed Piston
O	Open End Rod
A	Auger Flight
C	Core Barrel
NR	Not Recorded

COHESIVE SOILS Blows/foot (N)	Consistency
0 - 1	Very Soft
2 - 4	Soft
5 - 8	Medium Stiff
9 - 15	Stiff
16 - 30	Very Stiff
> 30	Hard

NON-COHESIVE SOILS Blows/foot (N)	Apparent Density
0 - 4	Very Loose
5 - 10	Loose
11 - 30	Medium Dense
31 - 50	Dense
> 50	Very Dense

WOR - Weight of Rod
WOH - Weight of Hammer

Soil Descriptions	Proportion
Capitalized Soil Name	Major Component
Lower Case Adjective	35% - 50%
Some	20% - 35%
Little	10% - 20%
Trace	1% - 10%

ENGLISH

TB-12 S:\MATERIALS-RESEARCH\GINTV\PROJECTS\DURHAM\16236\16236-BRIDGE TEST BORINGS.GPJ 9/19/2014 2:39:28 PM TB-12

TEST BORING REPORT

STATE OF NEW HAMPSHIRE DEPARTMENT OF TRANSPORTATION
MATERIALS & RESEARCH BUREAU - GEOTECHNICAL SECTION

PROJECT NAME **DURHAM 16236** BRIDGE NO. 145/116
DESCRIPTION US Route 4 over Bunker Creek

BORING NO. **B01**
SHEET NO. 2 OF 3
STA. 117+57 OFF. RT 12
BASELINE US Route 4
ELEVATION (ft) 8.0

DEPTH (ft)	STRATUM CHANGE (ft) DEPTH	ELEVATION	BLOWS PER 0.5 ft	SAMPLE NUMBER	SAMPLER RECOVERY (ft) [%]	DEPTH RANGE (ft)	FIELD CLASSIFICATION AND REMARKS	STRATUM SYMBOL
30			4 5 7 7	S15	1.3 [65]	29.0–31.0	Stiff, greenish gray w/ gray & olive stains, SILT, little clay to silty CLAY	
			2 5 6 7	S16	1.8 [90]	31.0–33.0	Stiff, similar to S15, w/ gray & olive stains, & w/ silty FINE SAND seams, & few organic fragments	
							-MARINE DEPOSIT-	
			3 4 5 6	S17	1.9 [95]	33.0–35.0	Stiff, olive gray w/ dark yellow brown & gray stains, SILT, little clay, w/ silty CLAY zones	
35			2 2 3 4	S18	2.0 [100]	35.5–37.5	Medium stiff, greenish gray, silty CLAY, w/ few yellow brown stains	
			WOH WOH 1 1	S19	2.0 [100]	38.0–40.0	Very soft, greenish gray w/ black stains, silty CLAY	
40			WOH WOH WOH 1	S20	2.0 [100]	40.0–42.0	Very soft, similar to S19	
			WOR WOR WOH WOH	S21	1.5 [75]	42.0–44.0	Very soft, similar to S19, w/ few gray, fine sandy seams	
45			WOR WOR WOH WOH	S22	2.0 [100]	44.0–46.0	Very soft, similar to S19	
			WOR 6 28 26	S23	0.7 [35]	46.0–48.0	Similar to S19	
	46.7	-38.7					Very poor recovery in Glacial Till (only sharp gravel particles)	
							-GLACIAL TILL-	
							Advanced exploration through soil and a boulder from 48.1-49'	
50			16 44 20 22	S24	0.4 [20]	50.3–52.3	Very dense, light olive brown, FINE SAND, some gravel, little silt, little medium sand, trace coarse sand	
			18 18 17 17	S25	0.8 [47]	52.3–54.0	Dense, pale olive, FINE SAND, little silt, little medium sand, trace gravel, trace coarse sand	
			23/0.2 21 25 25	S26	1.0 [50]	54.0–56.0	Dense, pale olive, FINE SAND, little silt, little medium sand, trace gravel, trace coarse sand	
55			18 19 29	S27	0.7 [47]	56.0–57.5	Dense, similar to S26	
	57.5	-49.5					-APPROXIMATE BEDROCK SURFACE-	
60				C1	4.7 [107]	58.0–62.4	Hard, slightly weathered, slightly to moderately fractured, dark gray, coarse - medium grained, DIORITE, w/ few moderately dipping fractures RQD: 2.7 / 4.4 = 61%	
65				C2	4.6 [102]	62.4	Hard, slightly weathered, moderately to slightly fractured, dark gray, coarse - medium grained, DIORITE, w/ traces of calcite and epidote stringers RQD: 3.1 / 4.5 = 69%	

TB-12 S:\MATERIALS-RESEARCH\GINTV\PROJECTS\DURHAM\16236\16236-BRIDGE TEST BORINGS.GPJ 9/19/2014 2:39:28 PM TB-12

TEST BORING REPORT

STATE OF NEW HAMPSHIRE DEPARTMENT OF TRANSPORTATION
MATERIALS & RESEARCH BUREAU - GEOTECHNICAL SECTION

PROJECT NAME **DURHAM 16236** BRIDGE NO. 145/116
DESCRIPTION US Route 4 over Bunker Creek

BORING NO. **B01**
SHEET NO. 3 OF 3
STA. 117+57 OFF. RT 12
BASELINE US Route 4
ELEVATION (ft) 8.0

DEPTH (ft)	STRATUM CHANGE (ft) DEPTH	ELEVATION	BLOWS PER 0.5 ft	SAMPLE NUMBER	SAMPLER RECOVERY (ft) [%]	DEPTH RANGE (ft)	FIELD CLASSIFICATION AND REMARKS	STRATUM SYMBOL
70				C3	4.8 [102]	66.9–71.6	Hard, slightly weathered, slightly fractured w/ two moderately fractured zones, dark gray, mostly coarse grained, DIORITE, w/ few calcite stringers RQD: 4.0 / 4.7 = 85%	
							Bottom of Exploration @ 71.6 ft (El. - 63.6)	
75								
80								
85								
90								
95								
100								

TB-12 S:\MATERIALS-RESEARCH\GINTV\PROJECTS\DURHAM\16236\16236-BRIDGE TEST BORINGS.GPJ 9/19/2014 2:39:28 PM TB-12

PRELIMINARY PLANS
SUBJECT TO CHANGE
DATE 1/29/2018

GM2 ASSOCIATES

SUBDIRECTORY	.DGN LOCATOR	SHEET SCALE
BRD/Details	16236Borings	1"-3'-0"(VERT.)

STATE OF NEW HAMPSHIRE
DEPARTMENT OF TRANSPORTATION * BUREAU OF BRIDGE DESIGN

TOWN DURHAM BRIDGE NO. 145\116 STATE PROJECT 16236
LOCATION US ROUTE 4 OVER BUNKER CREEK

BORINGS SHEET (2 OF 13)

BRIDGE SHEET 4 OF

REVISIONS AFTER PROPOSAL		BY	DATE		BY	DATE
	DESIGNED	BAW	1/15	CHECKED	TPL	5/15
	DRAWN	TEM	10/17	CHECKED	TPL	10/17
	QUANTITIES	---	---	CHECKED	---	---

ISSUE DATE	FEDERAL PROJECT NO.	SHEET NO.	TOTAL SHEETS
REV. DATE	X-A001(202)	5	18

FILE NUMBER -

TEST BORING REPORT

STATE OF NEW HAMPSHIRE DEPARTMENT OF TRANSPORTATION
MATERIALS & RESEARCH BUREAU - GEOTECHNICAL SECTION

PROJECT NAME **DURHAM 16236** BRIDGE NO. 145/116
DESCRIPTION US Route 4 over Bunker Creek

BORING NO. **B02**
SHEET NO. 1 OF 3
STA. 117+57 OFF. LT 12
BASELINE US Route 4
ELEVATION (ft) 8.3
START/END 8/18/14 / 8/22/14
DRILLER C. Cleveland (NHDOT)
INSPECTOR Doug Rogers
CLASSIFIER DRR
EAST/NORTH (ft) 1192596/231891

GROUNDWATER					EQUIPMENT	SAMPLER	CASING	CORE
DATE	TIME	DEPTH (ft)	ELEV. (ft)	BOTTOM OF CASING	BOTTOM OF HOLE	TYPE:	S	NW	NX
		Tidal				SIZE I.D. (in):	1.375	3	1.875
						HAMMER WT. (lb):	140	DRILL RIG	
						HAMMER FALL (in):	30	CME 45-C Trlr	
						HAMMER TYPE:	Automatic		

DEPTH (ft)	STRATUM CHANGE (ft) DEPTH	ELEVATION	BLOWS PER 0.5 ft	SAMPLE NUMBER	SAMPLER RECOVERY (ft) [%]	DEPTH RANGE (ft)	FIELD CLASSIFICATION AND REMARKS	STRATUM SYMBOL
0							-ASPHALT PAVEMENT-	
	1.4	6.9	19 22 22 17	S1	1.2 [60]	1.0–3.0	Dense, yellowish brown, coarse-fine sandy GRAVEL, trace of silt -FILL-	
5			10 10 10 7	S2	1.1 [55]	3.0–5.0	Medium dense, greyish brown to yellowish brown, MEDIUM-FINE SAND, little gravel, little coarse sand, trace silt	
			6 10 8 4	S3	0.4 [20]	5.0–7.0	Medium dense, yellowish brown and dark yellowish brown, gravelly COARSE-FINE SAND, some silt	
0			3 2 5 4	S4	0.8 [40]	7.0–9.0	Medium stiff, grey and dark grey w/ traces of very dark greyish brown, SILT, little clay, occasional small pocket of yellowish brown silty medium-fine sand, little gravel, little coarse sand	
			5 9 12 4	S5	1.0 [50]	9.0–11.0	Very stiff, dark grey and greenish grey, clayey SILT, little gravel, little coarse-medium sand	
−5			11 26 43 19	S6	1.1 [55]	11.0–13.0	Very dense, grey and dark grey, SILT, some gravel, little coarse-medium sand, little clay, isolated root fibers Note: cobble likely as split spoon bent during SPT	
10							Removed bent 3" drill casing; re-entered borehole w/ 4" roller bit; began to cut steady with 700-800 psi downfeed pressure; total loss of washwater return at 16.5'; noted an abundance of wood within washwater from 13.5-16.5' and a sudden drop of drill head at 18.4' (most likely the tidal deposit interface)	
−10	18.4	-10.2					-TIDAL MARINE DEPOSIT-	
	19.0	-10.8	9 8 7 7	S7	1.5 [75]	19.0–21.0	Solid WOOD, emitting a very strong odor (preservative?) Note: an abundance of wood fragments appearing in washwater while advancing hole to 21.0'; outside of split spoon has traces of dark brownish grey silt	
20			9 8 5 3	S8	1.2 [60]	21.0–23.0	Similar to S7	
−15	23.0	-14.8					-TIDAL MARINE DEPOSIT-	
	24.5	-16.3	4 2 2 3	S9	0.0 [0]	23.0–25.0	Soft, outside of split-spoon covered w/ dark grey-greenish grey, SILT	
25			4 5 7 7	S10	0.0 [0]	25.0–27.0	Stiff, outside of split spoon covered w/ grey, SILT -MARINE DEPOSIT-	
−20			4 4 5 5	S11	1.0 [50]	27.0–29.0	Stiff, grey and olive grey, clayey SILT, w/ traces of wood	

Sampler	Identification
S	Standard Split Spoon
SL	Large Spoon (O.D.= 3 in)
T	Thin Wall Tube
U	Undisturbed Piston
O	Open End Rod
A	Auger Flight
C	Core Barrel
NR	Not Recorded

COHESIVE SOILS Blows/foot (N)	Consistency
0 - 1	Very Soft
2 - 4	Soft
5 - 8	Medium Stiff
9 - 15	Stiff
16 - 30	Very Stiff
> 30	Hard

NON-COHESIVE SOILS Blows/foot (N)	Apparent Density
0 - 4	Very Loose
5 - 10	Loose
11 - 30	Medium Dense
31 - 50	Dense
> 50	Very Dense

WOR - Weight of Rod
WOH - Weight of Hammer

Soil Descriptions	Proportion
Capitalized Soil Name	Major Component
Lower Case Adjective	35% - 50%
Some	20% - 35%
Little	10% - 20%
Trace	1% - 10%

ENGLISH

TB-12 S:\MATERIALS-RESEARCH\GINTW\PROJECTS\DURHAM\16236\16236-BRIDGE TEST BORINGS.GPJ 9/19/2014 2:39:30 PM TB-12

TEST BORING REPORT

STATE OF NEW HAMPSHIRE DEPARTMENT OF TRANSPORTATION
MATERIALS & RESEARCH BUREAU - GEOTECHNICAL SECTION

PROJECT NAME **DURHAM 16236** BRIDGE NO. 145/116
DESCRIPTION US Route 4 over Bunker Creek

BORING NO. **B02**
SHEET NO. 2 OF 3
STA. 117+57 OFF. LT 12
BASELINE US Route 4
ELEVATION (ft) 8.3

DEPTH (ft)	STRATUM CHANGE (ft) DEPTH	ELEVATION	BLOWS PER 0.5 ft	SAMPLE NUMBER	SAMPLER RECOVERY (ft) [%]	DEPTH RANGE (ft)	FIELD CLASSIFICATION AND REMARKS	STRATUM SYMBOL
30			3 6 8 8	S12	0.3 [15]	29.0–31.0	Stiff, grey, silty CLAY, trace of wood Note: small amounts of wood contained within washwater while advancing hole to 32.0'	
			4 4 5 5	S13	1.7 [85]	32.0–34.0	Stiff, olive grey and grey, clayey SILT to silty CLAY, isolated strands of wood near 32.7'	
35			2 4 3 4	S14	0.7 [35]	34.0–36.0	Medium stiff, olive grey, clayey SILT, w/ strands of wood throughout the sample -MARINE DEPOSIT-	
40			WOR WOR WOR WOH	S15	1.8 [90]	39.0–41.0	Very soft, grey w/ occasional black streak, silty CLAY	
45			WOR WOR WOH WOH	S16	2.0 [100]	44.0–46.0	Very soft, grey, silty CLAY	
	48.6	-40.4					Noted abrupt material change at 48.6' while advancing 3" drill casing	
50			33 41 38 33	S17	0.6 [30]	49.0–51.0	Very dense, grey and greenish grey w/ traces of light olive brown, coarse-medium fine sandy SILT, some gravel, trace clay, small cobbles likely	
			22 21 21 20	S18	0.0 [0]	51.0–53.0	Dense, no recovery of sample following two attempts	
55			18 16 17 26	S19	0.5 [25]	53.0–55.0	Dense, light olive brown, FINE SAND, some silt, little gravel, little medium sand, little coarse sand	
			16 17 13 12	S20	1.1 [55]	55.0–57.0	Medium dense, light olive brown and yellowish brown, FINE SAND, some silt, trace gravel, trace medium sand, isolated weathered rock fragment -GLACIAL TILL-	
60			11 13 15 15	S21	1.5 [75]	57.0–59.0	Medium dense, light olive brown, FINE SAND, some silt, trace gravel, isolated very severely weathered rock fragment	
			14 17 18 18	S22	1.0 [50]	59.0–61.0	Dense, greyish brown and light olive brown, FINE SAND, some silt, little gravel, little coarse-medium sand, isolated very severely weathered rock fragment	
			15 10 13 16	S23	1.2 [60]	61.0–63.0	Medium dense, light olive brown, FINE SAND, some silt, little gravel, little coarse sand, trace medium sand	
	64.1	-55.9	15 22 20/0.1	S24	0.7 [64]	63.0–64.1	Light olive brown, MEDIUM-FINE SAND, some silt. some gravel, some coarse-medium sand	
65						64.5	-APPROXIMATE BEDROCK SURFACE- Cutting slow and steady w/ 3" roller bit to 69.5' *Description Continues on Next Page*	

TB-12 S:\MATERIALS-RESEARCH\GINTW\PROJECTS\DURHAM\16236\16236-BRIDGE TEST BORINGS.GPJ 9/19/2014 2:39:30 PM TB-12

TEST BORING REPORT

STATE OF NEW HAMPSHIRE DEPARTMENT OF TRANSPORTATION
MATERIALS & RESEARCH BUREAU - GEOTECHNICAL SECTION

PROJECT NAME **DURHAM 16236** BRIDGE NO. 145/116
DESCRIPTION US Route 4 over Bunker Creek

BORING NO. **B02**
SHEET NO. 3 OF 3
STA. 117+57 OFF. LT 12
BASELINE US Route 4
ELEVATION (ft) 8.3

DEPTH (ft)	STRATUM CHANGE (ft) DEPTH	ELEVATION	BLOWS PER 0.5 ft	SAMPLE NUMBER	SAMPLER RECOVERY (ft) [%]	DEPTH RANGE (ft)	FIELD CLASSIFICATION AND REMARKS	STRATUM SYMBOL
70				C1	5.0 [100]	69.5–74.5	Hard, slightly to moderately severely weathered, moderately to extremely fractured, dark grey, coarse-grained, DIORITE. Intruded w/ fine-grained QUARTZITE containing few calcite stringers from 66.7-68.5'. Beyond 68.5' is a finer-grained, extremely fractured METAVOLCANIC ROCK which extends to the end of the run. Joints/fractures are close to moderately closely spaced. Multiple fractures of 80-85° extend from approximately 68.5' to end of run. All other joints/fractures are near-horizontal to shallow dipping. Small zone of moderately severe weathering and extreme fracturing from 65.2-65.4'. RQD: 2.5 / 5.0 = 50%	
75				C2	5.0 [100]	74.5–79.5	Hard to moderately hard, slightly to moderately severely weathered, moderately to extremely fractured, dark grey, coarse-grained, DIORITE. Frequently interbedded w/ METAVOLCANIC ROCK to approximately 72.8'. Few calcite stringers present. Joints/fractures are very close to closely spaced. Many small zones exist that contain multiple high-angle fractures. RQD: 0.5 / 5.0 = 10%	
80				C3	5.0 [100]		Moderately hard to hard, moderately severe to slightly weathered, moderately to slightly fractured, dark grey, coarse-grained, DIORITE. joints/fractures are very close to closely spaced. Rock is extremely fractured from 74.5 to 76.0' with multiple high-angle fractures within this zone. From 76.0' to the end of the run, joints/fractures are near-horizontal to shallow dipping. Few calcite stringers and traces of epidote are present. RQD: 2.3 / 5.0 = 46%	
							Bottom of Exploration @ 79.5 ft (El. - 71.2)	

TB-12 S:\MATERIALS-RESEARCH\GINTW\PROJECTS\DURHAM\16236\16236-BRIDGE TEST BORINGS.GPJ 9/19/2014 2:39:30 PM TB-12

PRELIMINARY PLANS
SUBJECT TO CHANGE
DATE 1/29/2018

GM2 ASSOCIATES

SUBDIRECTORY	.DGN LOCATOR	SHEET SCALE
BRD/Details	16236Borings	1"-3'-0"(VERT.)

STATE OF NEW HAMPSHIRE
DEPARTMENT OF TRANSPORTATION * BUREAU OF BRIDGE DESIGN

TOWN DURHAM BRIDGE NO. 145\116 STATE PROJECT 16236
LOCATION US ROUTE 4 OVER BUNKER CREEK

BORINGS SHEET (3 OF 13)

REVISIONS AFTER PROPOSAL

	BY	DATE		BY	DATE
DESIGNED	BAW	1/15	CHECKED	TPL	5/15
DRAWN	TEM	10/17	CHECKED	TPL	10/17
QUANTITIES	---	---	CHECKED	---	---

ISSUE DATE
REV. DATE
FEDERAL PROJECT NO. X-A001(202)
SHEET NO. 6
TOTAL SHEETS 18
BRIDGE SHEET 5 OF
FILE NUMBER -

TEST BORING REPORT

STATE OF NEW HAMPSHIRE DEPARTMENT OF TRANSPORTATION
MATERIALS & RESEARCH BUREAU - GEOTECHNICAL SECTION

PROJECT NAME **DURHAM 16236** BRIDGE NO. 145/116
DESCRIPTION US Route 4 over Bunker Creek

BORING NO. **B03**
SHEET NO. 1 OF 2
STA. 117+93 OFF. LT 12
BASELINE US Route 4
ELEVATION (ft) 9.6
START/END 8/25/14 / 8/27/14
DRILLER P. Huckins (NHDOT)
INSPECTOR Scott Myers
CLASSIFIER SFM
EAST/NORTH (ft) 1192631/231881

GROUNDWATER					EQUIPMENT	SAMPLER	CASING	CORE
DATE	TIME	DEPTH (ft)	ELEV. (ft)	BOTTOM OF CASING	TYPE:	S	NW	NX
		Tidal			SIZE I.D. (in):	1.375	3	1.875
					HAMMER WT. (lb):	140	DRILL RIG	
					HAMMER FALL (in):	30	CME 45-B Truck	
					HAMMER TYPE:	Automatic		

DEPTH (ft)	STRATUM CHANGE (ft) DEPTH	ELEVATION	BLOWS PER 0.5 ft	SAMPLE NUMBER	SAMPLER RECOVERY (ft) [%]	DEPTH RANGE (ft)	FIELD CLASSIFICATION AND REMARKS
0							-ASPHALT PAVEMENT-
	1.0	8.6	18 15 12 12	S1	1.2 [60]	1.0–3.0	Medium dense, yellow brown, FINE SAND, little gravel, little medium sand, trace coarse sand, trace silt
							-FILL-
			8 9 5 5	S2	0.8 [40]	3.0–5.0	Medium dense, similar to S1. zone of olive gray, SILT, little clay, trace sand, trace gravel
			9 16 9 24	S3	1.1 [55]	5.0–7.0	Medium dense, mix of COARSE SAND & GRAVEL, little silt, trace medium - fine sand, & olive gray, SILT, little clay
							Advanced exploration through cobble
			6 10 33 18	S4	0.8 [40]	7.5–9.5	Dense, very dark gray, (Bony recovery) cobbles & GRAVEL, little coarse - fine sand, trace silt, w/ small silty pockets evident
			3 5 7 4	S5	0.4 [20]	10.0–12.0	Medium dense, SILT, little clay, little gravel, little coarse - fine sand
			1 4 38 30	S6	1.1 [55]	12.0–14.0	Loose, mix of black, silty MUCK, little organic matter, & olive gray, gravelly SILT, little fine sand, trace coarse - medium sand, w/ cobble evident
	14.0	-4.4					-CONCRETE-
							Advanced through concrete with roller bit to 15.9' then cored concrete with NX diamond to 17.8' with 1.9' recovery
	17.8	-8.2	WOH 1 0 1	S7	0.9 [45]	18.0–20.0	Very soft, dark gray, SILT, trace organic matter, trace clay
							-TIDAL MARINE DEPOSIT-
			WOR WOH WOH 1	S8	1.5 [75]	20.0–22.0	Very soft, SILT, little clay, trace organic matter w/ organic fibers
							Similar to S8
	22.5	-12.9	WOH 2 3 4	S9	0.9 [45]	22.0–24.0	Medium stiff, greenish gray, SILT, little clay, trace organic matter, w/ fine sandy partings, trace other granular particles
							-MARINE DEPOSIT-
			1 3 5 6	S10	1.8 [90]	24.0–26.0	Medium stiff, olive gray & greenish gray, SILT, little clay & silty CLAY
			1 6 8 10	S11	2.0 [100]	26.0–28.0	Stiff, similar to S10

Sampler	Identification
S	Standard Split Spoon
SL	Large Spoon (O.D.= 3 in)
T	Thin Wall Tube
U	Undisturbed Piston
O	Open End Rod
A	Auger Flight
C	Core Barrel
NR	Not Recorded

COHESIVE SOILS Blows/foot (N)	Consistency
0 - 1	Very Soft
2 - 4	Soft
5 - 8	Medium Stiff
9 - 15	Stiff
16 - 30	Very Stiff
> 30	Hard

NON-COHESIVE SOILS Blows/foot (N)	Apparent Density
0 - 4	Very Loose
5 - 10	Loose
11 - 30	Medium Dense
31 - 50	Dense
> 50	Very Dense

WOR - Weight of Rod
WOH - Weight of Hammer

Soil Descriptions	Proportion
Capitalized Soil Name	Major Component
Lower Case Adjective	35% - 50%
Some	20% - 35%
Little	10% - 20%
Trace	1% - 10%

ENGLISH

TB-12 S:\MATERIALS-RESEARCH\GINTW\PROJECTS\DURHAM\16236\16236-BRIDGE TEST BORINGS.GPJ 9/19/2014 2:39:32 PM TB-12

TEST BORING REPORT

STATE OF NEW HAMPSHIRE DEPARTMENT OF TRANSPORTATION
MATERIALS & RESEARCH BUREAU - GEOTECHNICAL SECTION

PROJECT NAME **DURHAM 16236** BRIDGE NO. 145/116
DESCRIPTION US Route 4 over Bunker Creek

BORING NO. **B03**
SHEET NO. 2 OF 2
STA. 117+93 OFF. LT 12
BASELINE US Route 4
ELEVATION (ft) 9.6

DEPTH (ft)	STRATUM CHANGE (ft) DEPTH	ELEVATION	BLOWS PER 0.5 ft	SAMPLE NUMBER	SAMPLER RECOVERY (ft) [%]	DEPTH RANGE (ft)	FIELD CLASSIFICATION AND REMARKS
30			3 5 6 6	S12	2.0 [100]	30.0–32.0	Stiff, olive gray w/ gray, silty CLAY, w/ SILT, little clay & occasional olive yellow silty FINE SAND seam
							-MARINE DEPOSIT-
35			WOH WOH WOH WOH	S13	2.0 [100]	35.0–37.0	Very soft, greenish gray, silty CLAY
	38.0	-28.4					-APPROXIMATE BEDROCK SURFACE-
40				C1	4.3 [90]	39.0–43.8	Hard, slightly weathered, moderately - slightly fractured w/ 6 moderately dipping fractures, dark gray, coarse - medium grained, DIORITE, w/ finer grained QUARTZITE intrusion from 41.1-42.5' RQD: 2.2 / 4.8 = 46%
45				C2	3.2 [91]	43.8–47.3	Hard, very slightly weathered, mostly slightly fractured w/ one moderately dipping fracture, dark gray, coarse - medium grained, DIORITE RQD: 2.4 / 3.5 = 69%
50				C3	3.7 [100]	47.3–51.0	Hard, very slightly weathered, sound, dark gray, coarse grained, DIORITE RQD: 3.5 / 3.7 = 95%
				C4	3.8 [127]	51.0–54.0	Hard, very slightly weathered, sound, dark gray, coarse grained, DIORITE, Note: Lag in recovery from C1-C3 runs picked up in C4 RQD: 3.7 / 3.0 = 123%
55							Bottom of Exploration @ 54.0 ft (El. - 44.4)
60							
65							

TB-12 S:\MATERIALS-RESEARCH\GINTW\PROJECTS\DURHAM\16236\16236-BRIDGE TEST BORINGS.GPJ 9/19/2014 2:39:32 PM TB-12

TEST BORING REPORT

STATE OF NEW HAMPSHIRE DEPARTMENT OF TRANSPORTATION
MATERIALS & RESEARCH BUREAU - GEOTECHNICAL SECTION

PROJECT NAME **DURHAM 16236** BRIDGE NO. 145/116
DESCRIPTION US Route 4 over Bunker Creek

BORING NO. **B04**
SHEET NO. 1 OF 2
STA. 117+93 OFF. RT 12
BASELINE US Route 4
ELEVATION (ft) 9.2
START/END 8/4/14 / 8/5/14
DRILLER C. Cleveland (NHDOT)
INSPECTOR Doug Rogers
CLASSIFIER DRR
EAST/NORTH (ft) 1192624/231858

GROUNDWATER					EQUIPMENT	SAMPLER	CASING	CORE
DATE	TIME	DEPTH (ft)	ELEV. (ft)	BOTTOM OF CASING	TYPE:	S	NW	NX
		Tidal			SIZE I.D. (in):	1.375	3	1.875
					HAMMER WT. (lb):	140	DRILL RIG	
					HAMMER FALL (in):	30	CME 45-C Trlr	
					HAMMER TYPE:	Automatic		

DEPTH (ft)	STRATUM CHANGE (ft) DEPTH	ELEVATION	BLOWS PER 0.5 ft	SAMPLE NUMBER	SAMPLER RECOVERY (ft) [%]	DEPTH RANGE (ft)	FIELD CLASSIFICATION AND REMARKS
0							-ASPHALT PAVEMENT-
	1.2	8.0	11 11 10 8	S1	1.3 [65]	1.5–3.5	Medium dense, dark greyish brown and dark yellowish brown, MEDIUM-FINE SAND, some gravel, some coarse sand, little silt, over yellowish brown, MEDIUM-FINE SAND, some coarse sand, little gravel, little silt
							-FILL-
			5 5 3 2	S2	0.8 [40]	4.0–6.0	Loose, dark yellowish brown, MEDIUM-FINE SAND, some gravel, some coarse sand, little silt, over dark grey, clayey SILT, trace fine gravel, isolated sea shell fragment
			3 3 11 27	S3	0.3 [15]	6.0–8.0	Medium dense, grey-dark grey, SILT, some gravel, some coarse-medium sand, little clay
			5 16 7 4	S4	0.8 [40]	8.0–10.0	Medium dense, brownish grey and yellowish brown, MEDIUM-FINE SAND, little coarse sand, little silt, over grey and dark olive grey, SILT, little clay, trace gravel, trace coarse-medium sand, occasional weathered rock fragment
			4 4 5 6	S5	0.6 [30]	10.0–12.0	Loose, grey-dark grey and light olive brown, SILT, some coarse-medium sand, some gravel, occasional very severely weathered rock fragment, trace clay
			5 7 14 69	S6	0.5 [25]	12.0–14.0	Medium dense, olive-olive grey and light olive brown, SILT, some gravel, some coarse-medium sand, w/severely weathered rock fragments throughout
			50/0.3	S7	0.2 [67]	14.0–14.3	Olive-olive grey, coarse-fine sandy SILT, some gravel Advanced hole through cobble (14.3-14.7') utilizing 3" roller bit; drill casing bent after driving to same depth; removed and replaced w/ 3" spin shoe for remainder of boring
			16 24 27 9	S8	0.8 [40]	16.0–18.0	Very dense, grey and olive grey, silty MEDIUM-FINE SAND, little gravel, little coarse sand, w/ occasional very severely weathered rock fragment, over black, coarse-fine sandy GRAVEL
	18.0	-8.8	1 0 1 0	S9	0.7 [35]	18.0–20.0	Very soft, dark grey-dark greenish grey, SILT, trace coarse-medium sand, trace clay, trace organics
			WOH WOH WOH 2	S10	0.8 [40]	20.0–22.0	Very soft, similar to S9
			WOH WOH WOH WOH 1	S11	1.7 [85]	22.0–24.0	Very soft, similar to S9
							-TIDAL MARINE DEPOSIT-
			WOH WOH WOH WOH 1	S12	1.0 [50]	24.0–26.0	Very soft, dark grey-dark greenish grey, SILT, trace organics, trace clay
			WOH 1 5 2 4	S13	1.7 [85]	26.0–28.0	Dark brownish grey and dark greyish brown, SILT, little organics
	27.4	-18.2					Light grey-grey, clayey SILT / silty CLAY -MARINE DEPOSIT-

Sampler	Identification
S	Standard Split Spoon
SL	Large Spoon (O.D.= 3 in)
T	Thin Wall Tube
U	Undisturbed Piston
O	Open End Rod
A	Auger Flight
C	Core Barrel
NR	Not Recorded

COHESIVE SOILS Blows/foot (N)	Consistency
0 - 1	Very Soft
2 - 4	Soft
5 - 8	Medium Stiff
9 - 15	Stiff
16 - 30	Very Stiff
> 30	Hard

NON-COHESIVE SOILS Blows/foot (N)	Apparent Density
0 - 4	Very Loose
5 - 10	Loose
11 - 30	Medium Dense
31 - 50	Dense
> 50	Very Dense

WOR - Weight of Rod
WOH - Weight of Hammer

Soil Descriptions	Proportion
Capitalized Soil Name	Major Component
Lower Case Adjective	35% - 50%
Some	20% - 35%
Little	10% - 20%
Trace	1% - 10%

ENGLISH

TB-12 S:\MATERIALS-RESEARCH\GINTW\PROJECTS\DURHAM\16236\16236-BRIDGE TEST BORINGS.GPJ 9/19/2014 2:39:34 PM TB-12

PRELIMINARY PLANS
SUBJECT TO CHANGE
DATE 1/29/2018

GM2 ASSOCIATES

SUBDIRECTORY	.DGN LOCATOR	SHEET SCALE
BRD/Details	16236Borings	1"=3'-0"(VERT.)

STATE OF NEW HAMPSHIRE
DEPARTMENT OF TRANSPORTATION * BUREAU OF BRIDGE DESIGN

TOWN DURHAM BRIDGE NO. 145\116 STATE PROJECT 16236
LOCATION US ROUTE 4 OVER BUNKER CREEK

BORINGS SHEET (4 OF 13)

REVISIONS AFTER PROPOSAL

	BY	DATE		BY	DATE
DESIGNED	BAW	1/15	CHECKED	TPL	5/15
DRAWN	TEM	10/17	CHECKED	TPL	10/17
QUANTITIES	---	---	CHECKED	---	---

ISSUE DATE
REV. DATE
FEDERAL PROJECT NO. X-A001(202)
SHEET NO. 7
TOTAL SHEETS 18
BRIDGE SHEET 6 OF
FILE NUMBER -

TEST BORING REPORT

STATE OF NEW HAMPSHIRE DEPARTMENT OF TRANSPORTATION
MATERIALS & RESEARCH BUREAU - GEOTECHNICAL SECTION

BORING NO. **B04**
SHEET NO. 2 OF 2
STA. 117+93 OFF. RT 12
BASELINE US Route 4
ELEVATION (ft) 9.2

PROJECT NAME **DURHAM 16236** BRIDGE NO. 145/116
DESCRIPTION US Route 4 over Bunker Creek

DEPTH (ft)	STRATUM CHANGE (ft) DEPTH	STRATUM CHANGE (ft) ELEVATION	BLOWS PER 0.5 ft	SAMPLE NUMBER	SAMPLER RECOVERY (ft) [%]	DEPTH RANGE (ft)	FIELD CLASSIFICATION AND REMARKS	STRATUM SYMBOL
			5 6 3 4 4 5	S14	1.4 [70]	30.0	Stiff, olive grey and grey, silty CLAY and SILT, little clay, w/ an isolated fine sand parting	
			1 2 1 1	S15	0.9 [45]	32.0	Medium stiff, grey and olive grey, SILT, little clay, w/ some silty CLAY -MARINE DEPOSIT-	
			WOH WOH 8	S16	1.8 [90]	34.0	Soft, grey and olive grey, clayey SILT / silty CLAY	
			45/0.3	S17	1.9 [106]	35.8	Grey and olive grey, silty CLAY and clayey SILT	
35.3 35.8	35.3 -26.1 -26.6					35.9	Olive-light olive brown, silty MEDIUM-FINE SAND, some gravel, little coarse sand -GLACIAL TILL- -APPROXIMATE BEDROCK SURFACE-	
				C1	4.8 [100]	40.7	Hard, slightly to moderately weathered, moderately to slightly fractured, dark grey, coarse-grained, DIORITE. Calcite present in thin veins and stringers throughout the run. Joints/fractures are very close to closely spaced and moderately to shallow dipping. Zone of extreme fracturing from 44.0-44.3'. Many joint surfaces are stained/discolored. RQD: 2.3 / 4.8 = 48%	
				C2	5.0 [100]	45.7	Hard, slightly weathered, slightly to moderately fractured, dark grey, coarse-grained, DIORITE. Calcite present in an occasional thin vein and/or stringer. Joints/fractures are closely spaced and most are moderately to shallow dipping w/ exception of near-vertical fracture from 40.7-41.1'. Small zones of extreme fracturing from 44.8-44.9' and 45.4-45.5'. Few joint surfaces are discolored/stained. RQD: 2.3 / 5.0 = 46%	
				C3	4.9 [100]	50.6	Hard, very slightly weathered, slightly to moderately fractured, dark grey, coarse-grained, DIORITE. Occasional thin vein and/or stringer of calcite. Isolated stringer of epidote. Joints/fractures are closely spaced and mostly moderately to shallow dipping. Fractures of 60° at 46.4', 65° at 46.9'. RQD: 3.2 / 4.9 = 65%	
							Bottom of Exploration @ 50.6 ft (El. - 41.4)	

TB-12 S:\MATERIALS-RESEARCH\GINTW\PROJECTS\DURHAM\16236\16236-BRIDGE TEST BORINGS.GPJ 9/19/2014 2:39:34 PM TB-12

TEST BORING REPORT

STATE OF NEW HAMPSHIRE DEPARTMENT OF TRANSPORTATION
MATERIALS & RESEARCH BUREAU - GEOTECHNICAL SECTION

BORING NO. **B05**
SHEET NO. 1 OF 3
STA. 117+34 OFF. RT 12
BASELINE US Route 4
ELEVATION (ft) 7.4
START/END 8/7/14 / 8/15/14
DRILLER P. Huckins (NHDOT)
INSPECTOR Scott Myers
CLASSIFIER SFM
EAST/NORTH (ft) 1192568/231874

PROJECT NAME **DURHAM 16236** BRIDGE NO. 145/116
DESCRIPTION US Route 4 over Bunker Creek

GROUNDWATER

DATE	TIME	DEPTH (ft)	ELEV. (ft)	BOTTOM OF CASING	BOTTOM OF HOLE
		Tidal			

EQUIPMENT	SAMPLER	CASING	CORE
TYPE:	S	NW	NX
SIZE I.D. (in):	1.375	3	1.875
HAMMER WT. (lb):	140	DRILL RIG	
HAMMER FALL (in):	30	CME 45-B Truck	
HAMMER TYPE:	Automatic		

DEPTH (ft)	STRATUM CHANGE (ft) DEPTH	STRATUM CHANGE (ft) ELEVATION	BLOWS PER 0.5 ft	SAMPLE NUMBER	SAMPLER RECOVERY (ft) [%]	DEPTH RANGE (ft)	FIELD CLASSIFICATION AND REMARKS	STRATUM SYMBOL
0							-ASPHALT PAVEMENT-	
	1.0	6.4	14 14 17 15	S1	1.1 [55]	3.0	Dense, initially black, bituminous stained, COARSE - FINE SAND, little gravel, trace silt, over yellow brown, FINE SAND, little medium sand, trace coarse sand, trace gravel -FILL-	
5			13 12 10 12	S2	0.6 [30]	5.0	Medium dense, brown & dark yellow brown, MEDIUM - FINE SAND, little gravel, little coarse sand, trace silt	
			7 3 5 3	S3	0.6 [30]	7.0	Loose, similar to S2, w/ zone of greenish gray, SILT, little clay	
			1 2 1 1	S4	0.5 [25]	9.0	Soft, initially similar to S3, then quickly changed to mix of dark gray & brown, SILT, trace clay, trace organic matter (fibers) & greenish gray, SILT, little clay	
10			WOH WOH 2 2	S5	1.3 [65]	11.0	Soft, olive gray, SILT, little clay & dark gray, SILT, trace organic matter w/ fibers and trace clay, trace fine sand	
							Advanced through cobbles, very stony	
			11 16 75/0.3	S6	0.5 [38]	13.8	Very dense, black & very dark gray stone fragments, w/ little soil of greenish gray, fine sandy SILT, little coarse - medium sand Advanced exploration with roller bit to 14.0' then with NX to 14.9' One large cobble, 0.6', recovered from this stony zone	
15			2 2 2 2	S7	0.2 [10]	17.0	Very loose, gray, FINE SAND, some silt, trace medium sand, organic fibers	
	17.0	-9.6	2 2 2 2	S8	0.0 [0]	19.0	Soft, trace of soil indicates olive gray, SILT, little - trace clay, trace organic matter, trace medium - fine sand	
20			WOH WOH 1 2	S9	2.0 [100]	21.0	Very soft, dark gray, SILT, little clay, trace organic matter w/ woody fibers -TIDAL MARINE DEPOSIT-	
			WOR WOH WOH 1	S10	1.8 [90]	23.0	Very soft, similar to S9, w/o woody fibers, w/ few dark brown, organic fibers	
25			WOH WOH WOH WOH	S11	0.6 [30]	25.0	Very soft, dark gray, SILT, trace clay, trace organic matter, trace fine sand, one gravel particle	
			WOR WOH WOH 1	S12	1.9 [95]	27.0	Very soft, dark gray, SILT, little clay, trace organic matter, trace fine sand	
			WOR WOH WOH WOH	S13	0.7 [35]	29.0	Very soft, similar to S12	

Sampler	Identification
S	Standard Split Spoon
SL	Large Spoon (O.D.= 3 in)
T	Thin Wall Tube
U	Undisturbed Piston
O	Open End Rod
A	Auger Flight
C	Core Barrel
NR	Not Recorded

COHESIVE SOILS Blows/foot (N)	Consistency
0 - 1	Very Soft
2 - 4	Soft
5 - 8	Medium Stiff
9 - 15	Stiff
16 - 30	Very Stiff
> 30	Hard

NON-COHESIVE SOILS Blows/foot (N)	Apparent Density
0 - 4	Very Loose
5 - 10	Loose
11 - 30	Medium Dense
31 - 50	Dense
> 50	Very Dense

WOR - Weight of Rod
WOH - Weight of Hammer

Soil Descriptions	Proportion
Capitalized Soil Name	Major Component
Lower Case Adjective	35% - 50%
Some	20% - 35%
Little	10% - 20%
Trace	1% - 10%

ENGLISH

TB-12 S:\MATERIALS-RESEARCH\GINTW\PROJECTS\DURHAM\16236\16236-BRIDGE TEST BORINGS.GPJ 9/19/2014 2:39:36 PM TB-12

TEST BORING REPORT

STATE OF NEW HAMPSHIRE DEPARTMENT OF TRANSPORTATION
MATERIALS & RESEARCH BUREAU - GEOTECHNICAL SECTION

BORING NO. **B05**
SHEET NO. 2 OF 3
STA. 117+34 OFF. RT 12
BASELINE US Route 4
ELEVATION (ft) 7.4

PROJECT NAME **DURHAM 16236** BRIDGE NO. 145/116
DESCRIPTION US Route 4 over Bunker Creek

DEPTH (ft)	STRATUM CHANGE (ft) DEPTH	STRATUM CHANGE (ft) ELEVATION	BLOWS PER 0.5 ft	SAMPLE NUMBER	SAMPLER RECOVERY (ft) [%]	DEPTH RANGE (ft)	FIELD CLASSIFICATION AND REMARKS	STRATUM SYMBOL
			WOH 1 2 2	S14	0.8 [40]	31.0	Soft, very dark brown & dark gray, SILT, little organic matter w/ fibers, w/ dark gray intermittent zones similar to S12 (Mucky)	
			WOH 1 2 1	S15	0.2 [10]	33.0	Soft, SILT, little organic matter, w/ little clay, trace wood (Mucky) (poor sample) -TIDAL MARINE DEPOSIT-	
			WOH WOH 2 5	S16	1.0 [50]	35.0	Likely similar to S15	
34.0	34.0	-26.6	3 3 4 4	S17	0.3 [15]	37.0	Greenish gray, SILT, little clay, w/ zones dark gray having trace organic matter & trace fine sand Medium stiff, greenish gray, SILT, little clay, trace fine sand -MARINE DEPOSIT-	
			1 3 3 2	S18	1.3 [65]	39.0	Medium stiff, greenish gray, silty CLAY w/ SILT, little clay zones	
			WOR WOR WOR WOH	S19	2.0 [100]	41.0	Very soft, greenish gray w/ black stains, silty CLAY	
			WOR WOR WOR WOH	S20	2.0 [100]	43.0	Very soft, similar to S19	
			WOR WOR WOR WOR	S21	2.0 [100]	45.0	Very soft, similar to S19	
			WOR WOH WOH 1	S22	2.0 [100]	47.0	Very soft, similar to S19	
			WOR WOR WOR WOR	S23	2.0 [100]	49.0	Very soft, similar to S19	
			WOR WOR WOR WOH	S24	2.0 [100]	51.0	Very soft, similar to S19	
			WOR WOR WOR WOR	S25	2.0 [100]	53.0	Very soft, similar to S19	
			WOR WOR WOR WOR	S26	2.0 [100]	55.0	Very soft, similar to S19	
			WOR WOH WOH 1	S27	2.0 [100]	57.5	Very soft, similar to S19 w/ few silty fine sandy seams	
57.8	57.8	-50.4	50 50 47 20	S28	0.8 [40]	60.0	Very dense, gravelly FINE SAND, little silt, trace coarse - medium sand, w/ cobbles likely -GLACIAL TILL-	
			22 24 20 17	S29	0.0 [0]	62.0	Dense, no recovery. Appears to be gray changing to olive fine sandy Till	
			22 16 12 15	S30	0.5 [25]	64.0	Medium dense, pale olive, FINE SAND, little gravel, little silt, trace coarse - medium sand	
			12 25 27	S31	0.6 [30]		Very dense, pale olive, FINE SAND, little silt, trace gravel, trace coarse - medium sand	

TB-12 S:\MATERIALS-RESEARCH\GINTW\PROJECTS\DURHAM\16236\16236-BRIDGE TEST BORINGS.GPJ 9/19/2014 2:39:36 PM TB-12

PRELIMINARY PLANS
SUBJECT TO CHANGE
DATE 1/29/2018

GM2 ASSOCIATES

SUBDIRECTORY	.DGN LOCATOR	SHEET SCALE
BRD/Details	16236Borings	1"=3'-0"(VERT.)

STATE OF NEW HAMPSHIRE
DEPARTMENT OF TRANSPORTATION * BUREAU OF BRIDGE DESIGN

TOWN DURHAM BRIDGE NO. 145\116 STATE PROJECT 16236
LOCATION US ROUTE 4 OVER BUNKER CREEK

BORINGS SHEET (5 OF 13)

BRIDGE SHEET 7 OF

REVISIONS AFTER PROPOSAL

	BY	DATE		BY	DATE
DESIGNED	BAW	1/15	CHECKED	TPL	5/15
DRAWN	TEM	10/17	CHECKED	TPL	10/17
QUANTITIES	---	---	CHECKED	---	---

FILE NUMBER -

ISSUE DATE
REV. DATE
FEDERAL PROJECT NO. X-A001(202)
SHEET NO. 8
TOTAL SHEETS 18

TEST BORING REPORT

STATE OF NEW HAMPSHIRE DEPARTMENT OF TRANSPORTATION
MATERIALS & RESEARCH BUREAU - GEOTECHNICAL SECTION

BORING NO. **B05**
SHEET NO. 3 OF 3
STA. 117+34 OFF. RT 12
BASELINE US Route 4
ELEVATION (ft) 7.4

PROJECT NAME **DURHAM 16236** BRIDGE NO. 145/116
DESCRIPTION US Route 4 over Bunker Creek

DEPTH (ft)	STRATUM CHANGE (ft) DEPTH	STRATUM CHANGE (ft) ELEVATION	BLOWS PER 0.5 ft	SAMPLE NUMBER	SAMPLER RECOVERY (ft) [%]	DEPTH RANGE (ft)	FIELD CLASSIFICATION AND REMARKS	STRATUM SYMBOL
			30 14 18 20 17	S32	0.7 [35]	66.0 – 68.0	Dense, light olive brown, FINE SAND, little gravel, little silt, little - trace medium sand, trace coarse sand -GLACIAL TILL-	
			14 12 11 19	S33	0.8 [40]	68.0 – 70.0	Medium dense, light olive brown, FINE SAND, little gravel, little silt, trace coarse - medium sand	
			27 40 57 70	S34	0.9 [45]	70.5 – 72.5	Very dense, light olive brown & light olive gray, FINE SAND, some gravel, little silt, trace coarse - medium sand, w/ cobble likely	
72.5	-65.1					73.0	-APPROXIMATE BEDROCK SURFACE-	
				C1	5.0 [100]	73.0 – 78.0	Hard, very slightly weathered, mostly sound, dark gray, medium - coarse grained, DIORITE, w/ one moderately dipping fracture approximately 2' into run RQD: 4.5 / 5.0 = 90%	
				C2	5.0 [100]	78.0 – 83.0	Hard, very slightly weathered, slightly fractured to sound (w/ 2 moderately fractured zones), dark gray, medium - coarse grained, DIORITE RQD: 3.8 / 5.0 = 76%	
						83.0	Bottom of Exploration @ 83.0 ft (El. - 75.6)	

TEST BORING REPORT

STATE OF NEW HAMPSHIRE DEPARTMENT OF TRANSPORTATION
MATERIALS & RESEARCH BUREAU - GEOTECHNICAL SECTION

BORING NO. **B06**
SHEET NO. 1 OF 3
STA. 117+34 OFF. LT 12
BASELINE US Route 4
ELEVATION (ft) 7.5
START/END 8/18/14 / 8/22/14
DRILLER P. Huckins (NHDOT)
INSPECTOR Scott Myers
CLASSIFIER SFM
EAST/NORTH (ft) 1192574/231897

PROJECT NAME **DURHAM 16236** BRIDGE NO. 145/116
DESCRIPTION US Route 4 over Bunker Creek

GROUNDWATER				
DATE	TIME	DEPTH (ft)	ELEV. (ft)	BOTTOM OF CASING	BOTTOM OF HOLE
		Tidal			

EQUIPMENT	SAMPLER	CASING	CORE
TYPE:	S	NW	NX
SIZE I.D. (in):	1.375	3	1.875
HAMMER WT. (lb):	140	DRILL RIG	
HAMMER FALL (in):	30	CME 45-B Truck	
HAMMER TYPE:	Automatic		

DEPTH (ft)	STRATUM CHANGE (ft) DEPTH	STRATUM CHANGE (ft) ELEVATION	BLOWS PER 0.5 ft	SAMPLE NUMBER	SAMPLER RECOVERY (ft) [%]	DEPTH RANGE (ft)	FIELD CLASSIFICATION AND REMARKS	STRATUM SYMBOL
0	1.4	6.1					-ASPHALT PAVEMENT-	
			22 19 19 19	S1	1.3 [65]	1.0 – 3.0	Dense, yellow brown, FINE SAND, little gravel, little medium sand, trace silt, trace coarse sand -FILL-	
			14 13 12 6	S2	0.5 [25]	3.0 – 5.0	Medium dense, mix of dark yellow brown, gravelly FINE SAND, little coarse - medium sand, little silt, & pockets of olive gray, SILT, little clay	
			10 16 8 5	S3	0.8 [40]	5.0 – 7.0	Medium dense, mix of dark yellow brown, FINE SAND, little gravel, little medium sand, little silt, trace coarse sand & olive gray, SILT, little clay	
			7 10 11 4	S4	0.1 [5]	7.0 – 9.0	Medium dense, few sharp gravel & coarse sand particles recovered	
			2 8 6 4	S5	0.4 [20]	9.0 – 11.0	Medium dense, gray & dark yellow brown, FINE SAND, little silt, little gravel, little medium sand, trace coarse sand	
			4 8 3 6	S6	0.4 [20]	11.0 – 13.0	Medium dense, gray, silty GRAVEL, little coarse - fine sand, trace clay	
	13.0	-5.5	2 2 2 2	S7	1.1 [55]	13.0 – 15.0	Soft, dark gray, SILT, trace clay, trace organic matter, trace fine sand -TIDAL MARINE DEPOSIT-	
			WOH WOH WOH 1	S8	2.0 [100]	15.0 – 17.0	Very soft, dark gray, SILT, little clay, trace organic matter, w/ occasional sea shell remnant	
			WOH WOH WOH WOH	S9	2.0 [100]	17.0 – 19.0	Very soft, similar to S8	
						19.0	Casing sunk while cleaning it out	
			1 1 1 1	S10	0.0 [0]	20.0 – 22.0	Soft, dark gray wash, likely similar to S8	
			WOH WOH WOH 1	S11	1.8 [90]	22.0 – 24.0	Very soft, similar to S8, w/ little clay	
			WOH WOH WOH WOH	S12	1.8 [90]	24.0 – 26.0	Very soft, similar to S11	
			WOR WOR WOH WOH	S13	1.8 [90]	26.0 – 28.0	Very soft, similar to S11	
			WOR WOH			28.0		

Description Continues on Next Page

Sampler	Identification
S	Standard Split Spoon
SL	Large Spoon (O.D.= 3 in)
T	Thin Wall Tube
U	Undisturbed Piston
O	Open End Rod
A	Auger Flight
C	Core Barrel
NR	Not Recorded

COHESIVE SOILS Blows/foot (N)	Consistency
0 - 1	Very Soft
2 - 4	Soft
5 - 8	Medium Stiff
9 - 15	Stiff
16 - 30	Very Stiff
> 30	Hard

NON-COHESIVE SOILS Blows/foot (N)	Apparent Density
0 - 4	Very Loose
5 - 10	Loose
11 - 30	Medium Dense
31 - 50	Dense
> 50	Very Dense

WOR - Weight of Rod
WOH - Weight of Hammer

Soil Descriptions	Proportion
Capitalized Soil Name	Major Component
Lower Case Adjective	35% - 50%
Some	20% - 35%
Little	10% - 20%
Trace	1% - 10%

ENGLISH

TEST BORING REPORT

STATE OF NEW HAMPSHIRE DEPARTMENT OF TRANSPORTATION
MATERIALS & RESEARCH BUREAU - GEOTECHNICAL SECTION

BORING NO. **B06**
SHEET NO. 2 OF 3
STA. 117+34 OFF. LT 12
BASELINE US Route 4
ELEVATION (ft) 7.5

PROJECT NAME **DURHAM 16236** BRIDGE NO. 145/116
DESCRIPTION US Route 4 over Bunker Creek

DEPTH (ft)	STRATUM CHANGE (ft) DEPTH	STRATUM CHANGE (ft) ELEVATION	BLOWS PER 0.5 ft	SAMPLE NUMBER	SAMPLER RECOVERY (ft) [%]	DEPTH RANGE (ft)	FIELD CLASSIFICATION AND REMARKS	STRATUM SYMBOL
			1 2 3 4 4 3	S14	2.0 [100]	30.0 – 32.0	Very soft, initially similar to S11, over dark grayish brown, silty MUCK, little organic matter including fibers, trace fine sand, trace clay Medium stiff, likely similar to S14, from what is stuck to the outside of spoon & observing the washing out after sample -TIDAL MARINE-	
			WOH WOH WOH 2	S15	0.0 [0]	32.0 – 34.0	Very soft, dark grayish brown, silty ORGANIC MUCK w/ fibers, w/ zones of dark gray, SILT, trace organic matter	
			2 3 3 4	S16	2.0 [100]	34.0 – 36.0	Dark gray, SILT, little clay Medium stiff, greenish gray, silty CLAY, w/ olive stains, few dark brown organic fibers, occasional trace wood	
			WOR WOH WOH WOH	S17	1.8 [90]	36.0 – 38.0	Very soft, greenish gray, silty CLAY -MARINE DEPOSIT-	
33.5	-26.0		WOH WOH WOH 1	S18	2.0 [100]	40.0 – 42.0	Very soft, greenish gray, silty CLAY, w/ few black stains	
			WOR WOR WOR WOH	S19	2.0 [100]	45.0 – 47.0	Very soft, similar to S19	
			WOR WOR WOR WOH	S20	2.0 [100]	50.0 – 52.0	Very soft, similar to S19	
			WOR WOR 30 19	S21	0.8 [40]	55.0 – 57.0	Similar to S19 A few gravel particles, little fine sand, trace of coarse - medium sand recovered Advanced exploration through large cobble with NX diamond with 0.6' recovery.	
56.0	-48.5		16 15 10 8	S22	0.8 [40]	58.0 – 60.0	Medium dense, appears to be a light olive gray to light olive brown sandy Till -GLACIAL TILL-	
			10 11 15 14	S23	0.0 [0]	60.0 – 62.0	Medium dense, gray w/ pale olive zones, FINE SAND, little silt, little gravel, little coarse - medium sand	
			42 30 24 32	S24	0.6 [30]	62.0 – 64.0	Very dense, light yellow brown & olive gray, FINE SAND, little gravel, little silt, little coarse - medium sand, w/ cobble likely	
			19 19 16	S25	0.6 [30]	64.0	Dense, light olive brown, FINE SAND, little silt, little gravel, trace coarse - medium sand	
				S26	0.4 [20]			

PRELIMINARY PLANS
SUBJECT TO CHANGE
DATE 1/29/2018

GM2 ASSOCIATES

SUBDIRECTORY	.DGN LOCATOR	SHEET SCALE
BRD/Details	16236Borings	1"=3'-0"(VERT.)

STATE OF NEW HAMPSHIRE
DEPARTMENT OF TRANSPORTATION * BUREAU OF BRIDGE DESIGN

TOWN DURHAM BRIDGE NO. 145\116 STATE PROJECT 16236
LOCATION US ROUTE 4 OVER BUNKER CREEK

BORINGS SHEET (6 OF 13)

REVISIONS AFTER PROPOSAL

	BY	DATE		BY	DATE
DESIGNED	BAW	1/15	CHECKED	TPL	5/15
DRAWN	TEM	10/17	CHECKED	TPL	10/17
QUANTITIES	---	---	CHECKED	---	---

ISSUE DATE
REV. DATE

FEDERAL PROJECT NO. X-A001(202)

BRIDGE SHEET 8 OF 9
FILE NUMBER -
TOTAL SHEETS 18

TB-12 S:\MATERIALS-RESEARCH\GINTW\PROJECTS\DURHAM\16236\16236-BRIDGE TEST BORINGS.GPJ 9/19/2014 2:39:38 PM TB-12

TEST BORING REPORT

STATE OF NEW HAMPSHIRE DEPARTMENT OF TRANSPORTATION
MATERIALS & RESEARCH BUREAU - GEOTECHNICAL SECTION

BORING NO. **B06**
SHEET NO. 3 OF 3
STA. 117+34 OFF. LT 12
BASELINE US Route 4
ELEVATION (ft) 7.5

PROJECT NAME **DURHAM 16236** BRIDGE NO. 145/116
DESCRIPTION US Route 4 over Bunker Creek

DEPTH (ft)	STRATUM CHANGE (ft) DEPTH	STRATUM CHANGE (ft) ELEVATION	BLOWS PER 0.5 ft	SAMPLE NUMBER	SAMPLER RECOVERY (ft) [%]	DEPTH RANGE (ft)	FIELD CLASSIFICATION AND REMARKS	STRATUM SYMBOL
			12			66.0		
			8 8 8 8	S27	0.9 [45]	68.0	Medium dense, light olive brown, FINE SAND, little silt, little medium sand, trace gravel, trace coarse sand -GLACIAL TILL-	
			9 9 9 15/0.1	S28	0.6 [38]	69.6	Medium dense, similar to S27	
69.6	-62.1					70.0	-APPROXIMATE BEDROCK SURFACE-	
				C1	4.8 [100]	74.8	Hard, slightly weathered, slightly to moderately fractured w/ two high angle fractures & two moderate angle fractures, dark gray, coarse - medium grained, DIORITE RQD: 3.2 / 4.8 = 67%	
				C2	4.9 [98]	79.8	Hard, slightly weathered, moderately - slightly fractured w couple of moderately dipping fractures, dark gray, coarse - medium grained, DIORITE RQD: 2.1 / 5.0 = 42%	
							Bottom of Exploration @ 79.8 ft (El. - 72.3)	

TB-12 S:\MATERIALS-RESEARCH\GINTW\PROJECTS\DURHAM\16236\16236-BRIDGE TEST BORINGS.GPJ 9/19/2014 2:39:38 PM TB-12

TEST BORING REPORT

STATE OF NEW HAMPSHIRE DEPARTMENT OF TRANSPORTATION
MATERIALS & RESEARCH BUREAU - GEOTECHNICAL SECTION

BORING NO. **B07**
SHEET NO. 1 OF 2
STA. 118+14 OFF. LT 12
BASELINE US Route 4
ELEVATION (ft) 10.4
START/END 8/25/14 / 8/26/14
DRILLER C. Cleveland (NHDOT)
INSPECTOR Doug Rogers
CLASSIFIER DRR
EAST/NORTH (ft) 1192651/231876

PROJECT NAME **DURHAM 16236** BRIDGE NO. 145/116
DESCRIPTION US Route 4 over Bunker Creek

GROUNDWATER					EQUIPMENT	SAMPLER	CASING	CORE
DATE	TIME	DEPTH (ft)	ELEV. (ft)	BOTTOM OF CASING	BOTTOM OF HOLE	TYPE:	S	NW	NX
						SIZE I.D. (in):	1.375	3	1.875
		Tidal				HAMMER WT. (lb):	140	DRILL RIG	
						HAMMER FALL (in):	30	CME 45-C Trlr	
						HAMMER TYPE:	Automatic		

DEPTH (ft)	STRATUM CHANGE (ft) DEPTH	STRATUM CHANGE (ft) ELEVATION	BLOWS PER 0.5 ft	SAMPLE NUMBER	SAMPLER RECOVERY (ft) [%]	DEPTH RANGE (ft)	FIELD CLASSIFICATION AND REMARKS	STRATUM SYMBOL
0							-ASPHALT PAVEMENT-	
	1.4	9.0	31 32 30 19	S1	1.4 [70]	1.0	Very dense, yellowish brown and dark yellowish brown, MEDIUM-FINE SAND, some gravel, some coarse sand, trace silt -FILL-	
			11 8 6 9	S2	0.7 [35]	3.0	Medium dense, greyish brown and yellowish brown, MEDIUM-FINE SAND, some gravel, little coarse sand, little silt, over olive grey and olive, clayey SILT, w/ occasional thin layer yellowish brown medium-fine sand	
5			5 4 4 3	S3	1.0 [50]	5.0	Loose, olive and light olive brown, SILT, little clay, mixed w/ greyish brown, COARSE-FINE SAND, little gravel	
			3 4 25/0.1	S4	0.4 [36]	7.0	Olive, clayey SILT, little coarse-medium sand, trace fine gravel, isolated weathered stone in end of split spoon tip	
						8.1	Advanced hole to 10.0' through cobble (8.1-8.6') w/ 3" roller bit; removed 3" casing drive shoe and replaced w/ spin shoe; re-advanced to 10.0'	
10			13 50	S5	0.6 [60]	10.0 11.0	Grey, coarse-fine sandy GRAVEL, some silt, small cobble from 11.0-11.3'	
			2 11 7 5	S6	0.6 [30]	12.0 14.0	Medium dense, grey and dark grey, gravelly COARSE-FINE SAND, little silt, occasional solid wood fragment (treated-w/ strong odor, as part of past construction)	
	14.0	-3.6	3 21 14 8	S7	0.9 [45]	14.0 16.0	Dense, solid WOOD, w/ strong odor	
15	16.0	-5.6	3 2 2 3	S8	0.0 [0]	16.0 18.0	Soft, dark grey and greenish grey, SILT Note: dark grey and dark brownish grey washwater observed while advancing to 18.0'; outside of split spoon covered w/ dark grey and greenish grey, SILT following SPT	
			2 2 2 2	S9	1.3 [65]	18.0 20.0	Soft, dark grey and greenish grey, SILT, little clay, few wood fragments, isolated tiny sea-shell fragments -TIDAL MARINE DEPOSIT-	
20			1 2 2 2	S10	0.7 [35]	20.0 22.0	Soft, dark grey to dark greyish brown, SILT, trace organic	
	22.0	-11.6	WOH 1 3 5	S11	1.6 [80]	22.0 24.0	Dark brown, mucky PEAT -ORGANIC DEPOSIT- Grey, clayey SILT to silty CLAY	
	23.0	-12.6	3 7 9 11	S12	1.5 [75]	24.0 26.0	Very stiff, grey and olive grey, silty CLAY -MARINE DEPOSIT-	
25	26.5	-16.1	4 40/0.2	S13	0.7 [100]	26.0 26.7 26.8	Grey and olive grey, clayey SILT -APPROXIMATE BEDROCK SURFACE- Very severely to completely weathered, ROCK (26.5-26.7')	
							Hard, very slightly weathered, moderately to slightly fractured, dark grey,	

Sampler	Identification
S	Standard Split Spoon
SL	Large Spoon (O.D.= 3 in)
T	Thin Wall Tube
U	Undisturbed Piston
O	Open End Rod
A	Auger Flight
C	Core Barrel
NR	Not Recorded

COHESIVE SOILS Blows/foot (N)	Consistency
0 - 1	Very Soft
2 - 4	Soft
5 - 8	Medium Stiff
9 - 15	Stiff
16 - 30	Very Stiff
> 30	Hard

NON-COHESIVE SOILS Blows/foot (N)	Apparent Density
0 - 4	Very Loose
5 - 10	Loose
11 - 30	Medium Dense
31 - 50	Dense
> 50	Very Dense

WOR - Weight of Rod
WOH - Weight of Hammer

Soil Descriptions	Proportion
Capitalized Soil Name	Major Component
Lower Case Adjective	35% - 50%
Some	20% - 35%
Little	10% - 20%
Trace	1% - 10%

ENGLISH

TB-12 S:\MATERIALS-RESEARCH\GINTW\PROJECTS\DURHAM\16236\16236-BRIDGE TEST BORINGS.GPJ 9/19/2014 2:39:40 PM TB-12

TEST BORING REPORT

STATE OF NEW HAMPSHIRE DEPARTMENT OF TRANSPORTATION
MATERIALS & RESEARCH BUREAU - GEOTECHNICAL SECTION

BORING NO. **B07**
SHEET NO. 2 OF 2
STA. 118+14 OFF. LT 12
BASELINE US Route 4
ELEVATION (ft) 10.4

PROJECT NAME **DURHAM 16236** BRIDGE NO. 145/116
DESCRIPTION US Route 4 over Bunker Creek

DEPTH (ft)	STRATUM CHANGE (ft) DEPTH	STRATUM CHANGE (ft) ELEVATION	BLOWS PER 0.5 ft	SAMPLE NUMBER	SAMPLER RECOVERY (ft) [%]	DEPTH RANGE (ft)	FIELD CLASSIFICATION AND REMARKS	STRATUM SYMBOL
				C1	4.8 [98]	31.7	coarse-grained, DIORITE. Joints/fractures are closely spaced and shallow to moderately dipping w/ exception of 65° fracture at 30.6'. Most joint surfaces are stained and/or discolored. RQD: 3.6 / 4.9 = 73%	
				C2	4.9 [98]	36.7	Hard, slightly to very slightly weathered, moderately to slightly fractured, dark grey, coarse-grained, DIORITE. Joints/fractures are closely spaced w/ exception of extremely fractured zone from 32.0-32.3'. Most joints/fractures are near-horizontal to shallow dipping w/ exception of 60° fracture at 32.7'. Most all joint surfaces are stained and/or discolored. RQD: 3.4 / 5.0 = 68%	
							Bottom of Exploration @ 36.7 ft (El. - 26.3)	

TB-12 S:\MATERIALS-RESEARCH\GINTW\PROJECTS\DURHAM\16236\16236-BRIDGE TEST BORINGS.GPJ 9/19/2014 2:39:40 PM TB-12

PRELIMINARY PLANS
SUBJECT TO CHANGE
DATE 1/29/2018

GM2 ASSOCIATES

SUBDIRECTORY	.DGN LOCATOR	SHEET SCALE
BRD/Details	16236Borings	1"=3'-0"(VERT.)

STATE OF NEW HAMPSHIRE
DEPARTMENT OF TRANSPORTATION * BUREAU OF BRIDGE DESIGN

TOWN DURHAM BRIDGE NO. 145\116 STATE PROJECT 16236
LOCATION US ROUTE 4 OVER BUNKER CREEK

BORINGS SHEET (7 OF 13)

BRIDGE SHEET 9 OF

REVISIONS AFTER PROPOSAL		BY	DATE		BY	DATE
	DESIGNED	BAW	1/15	CHECKED	TPL	5/15
	DRAWN	TEM	10/17	CHECKED	TPL	10/17
	QUANTITIES	---	---	CHECKED	---	---

FILE NUMBER -

ISSUE DATE	FEDERAL PROJECT NO.	SHEET NO.	TOTAL SHEETS
REV. DATE	X-A001(202)	10	18

TEST BORING REPORT

STATE OF NEW HAMPSHIRE DEPARTMENT OF TRANSPORTATION
MATERIALS & RESEARCH BUREAU - GEOTECHNICAL SECTION

PROJECT NAME **DURHAM 16236** BRIDGE NO. 145/116
DESCRIPTION US Route 4 over Bunker Creek

BORING NO. **B08**
SHEET NO. 1 OF 2
STA. 118+14 OFF. RT 12
BASELINE US Route 4
ELEVATION (ft) 10.0
START/END 8/6/14 / 8/7/14
DRILLER C. Cleveland (NHDOT)
INSPECTOR Doug Rogers
CLASSIFIER DRR
EAST/NORTH (ft) 1192644/231852

GROUNDWATER					EQUIPMENT	SAMPLER	CASING	CORE
DATE	TIME	DEPTH (ft)	ELEV. (ft)	BOTTOM OF CASING	TYPE:	S	NW	NX
		Tidal			SIZE I.D. (in):	1.375	3	1.875
					HAMMER WT. (lb):	140	DRILL RIG	
					HAMMER FALL (in):	30	CME 45-C Trlr	
					HAMMER TYPE:	Automatic		

DEPTH (ft)	STRATUM CHANGE (ft) DEPTH	ELEVATION	BLOWS PER 0.5 ft	SAMPLE NUMBER	SAMPLER RECOVERY (ft) [%]	DEPTH RANGE (ft)	FIELD CLASSIFICATION AND REMARKS
0							-ASPHALT PAVEMENT-
	0.9	9.1	15 13 11 10	S1	1.0 [50]	1.0 – 3.0	Medium dense, dark greyish brown and dark yellowish brown, gravelly COARSE-FINE SAND, some silt, over greyish brown and yellowish brown, MEDIUM-FINE SAND, little coarse sand, little fine gravel, little silt
			6 6 6 7	S2	0.5 [25]	3.0 – 5.0	Medium dense, dark yellowish brown, MEDIUM-FINE SAND, some coarse sand, little fine gravel, little silt
5							-FILL-
			11 12 5 4	S3	0.6 [30]	5.0 – 7.0	Medium dense, dark yellowish brown, silty COARSE-FINE SAND, some gravel, w/ pockets of olive and olive grey clayey silt, over dark grey, silty CLAY, trace fine gravel, trace coarse-medium sand
			1 0 3 2	S4	0.1 [5]	7.0 – 9.0	Very loose, dark yellowish brown, COARSE-FINE SAND (most likely wash material while advancing to 7.0')
10			2 2 11 12	S5	0.7 [35]	9.0 – 11.0	Medium dense, grey and dark grey, SILT, little clay, mixed w/ gravelly COARSE-FINE SAND
			17 18 7 20/0.2	S6	0.9 [53]	11.0 – 12.7	Medium dense, grey and dark grey, SILT, little clay, mixed w/ gravelly COARSE-FINE SAND, isolated 1" wood fragment, cobble from 12.7-12.9'
			1 3 6 12	S7	0.4 [20]	13.0 – 15.0	Loose, grey, gravelly COARSE-FINE SAND, mixed w/ SILT, little clay
15	15.7	-5.7	8 3 2 3	S8	1.1 [55]	15.0 – 17.0	Grey-greenish grey, gravelly COARSE-FINE SAND, some silt Medium stiff, grey-greenish grey, SILT, trace clay, isolated reed, isolated small sea shell fragment
			1 1 2 1	S9	1.4 [70]	17.0 – 19.0	Soft, similar to S8
							-TIDAL MARINE DEPOSIT-
			2 3 4 3	S10	0.3 [15]	19.0 – 21.0	Medium stiff, green-greenish grey, SILT, trace of medium sand, isolated reed, isolated small sea shell fragments
20							
	23.7	-13.7	2 2 2 9	S11	1.2 [60]	22.0 – 24.0	Soft, dark grey-greenish grey, SILT, trace medium sand, trace clay, occasional reed, isolated wood fibers
							-GLACIAL TILL-
25			4 9 12 14	S12	0.6 [30]	24.5 – 26.5	Medium dense, grey-dark grey, fine sandy SILT, some gravel, little coarse-medium sand, trace clay
	26.7	-16.7				27.0	-APPROXIMATE BEDROCK SURFACE- Hard, slightly to very slightly weathered, moderately fractured to sound, dark grey, coarse-grained, DIORITE. Isolated stringers of calcite are present.

Sampler	Identification
S	Standard Split Spoon
SL	Large Spoon (O.D.= 3 in)
T	Thin Wall Tube
U	Undisturbed Piston
O	Open End Rod
A	Auger Flight
C	Core Barrel
NR	Not Recorded

COHESIVE SOILS Blows/foot (N)	Consistency
0 - 1	Very Soft
2 - 4	Soft
5 - 8	Medium Stiff
9 - 15	Stiff
16 - 30	Very Stiff
> 30	Hard

NON-COHESIVE SOILS Blows/foot (N)	Apparent Density
0 - 4	Very Loose
5 - 10	Loose
11 - 30	Medium Dense
31 - 50	Dense
> 50	Very Dense

WOR - Weight of Rod
WOH - Weight of Hammer

Soil Descriptions	Proportion
Capitalized Soil Name	Major Component
Lower Case Adjective	35% - 50%
Some	20% - 35%
Little	10% - 20%
Trace	1% - 10%

ENGLISH

TB-12 S:\MATERIALS-RESEARCH\GINTW\PROJECTS\DURHAM\16236\16236-BRIDGE TEST BORINGS.GPJ 9/19/2014 2:39:41 PM TB-12

TEST BORING REPORT

STATE OF NEW HAMPSHIRE DEPARTMENT OF TRANSPORTATION
MATERIALS & RESEARCH BUREAU - GEOTECHNICAL SECTION

PROJECT NAME **DURHAM 16236** BRIDGE NO. 145/116
DESCRIPTION US Route 4 over Bunker Creek

BORING NO. **B08**
SHEET NO. 2 OF 2
STA. 118+14 OFF. RT 12
BASELINE US Route 4
ELEVATION (ft) 10.0

DEPTH (ft)	STRATUM CHANGE (ft) DEPTH	ELEVATION	BLOWS PER 0.5 ft	SAMPLE NUMBER	SAMPLER RECOVERY (ft) [%]	DEPTH RANGE (ft)	FIELD CLASSIFICATION AND REMARKS
30				C1	5.0 [100]	32.0	Joints/fractures are close to moderately closely spaced, near-horizontal to shallow dipping w/ exception of high-angle (near-vertical) fracture extending from 28.4 to 29.8'. The fracture is partially infilled w/ epidote from 29.0-29.6'. Small zone of moderately severe weathering exists from 28.7-28.8'. Few joint surfaces are discolored/stained. RQD: 4.1 / 5.0 = 82%
35				C2	4.4 [88]	37.0	Hard, slightly to very slightly weathered, moderately to slightly fractured, dark grey, coarse-grained, DIORITE. Stringers of calcite and epidote are present throughout the run. Joints/fractures are close to very closely spaced and near-horizontal to shallow dipping with exception of high-angle fracture extending from 35.3-35.9'. Moderate weathering and extreme fracturing within this zone. Isolated minor pitting of core surface exists. Approximately 0.6' of core was left in hole, unable to retrieve. RQD: 2.7 / 5.0 = 54%
40							
45							Bottom of Exploration @ 37.0 ft (El. - 27.0)
50							
55							
60							
65							

TB-12 S:\MATERIALS-RESEARCH\GINTW\PROJECTS\DURHAM\16236\16236-BRIDGE TEST BORINGS.GPJ 9/19/2014 2:39:41 PM TB-12

TEST BORING REPORT

STATE OF NEW HAMPSHIRE DEPARTMENT OF TRANSPORTATION
MATERIALS & RESEARCH BUREAU - GEOTECHNICAL SECTION

PROJECT NAME **DURHAM 16236** BRIDGE NO. N/A
DESCRIPTION US Route 4 Roadway

BORING NO. **B101**
SHEET NO. 1 OF 2
STA. 120+09 OFF. LT 42
BASELINE US Route 4
ELEVATION (ft) 20.3
START/END 8/8/14 / 8/11/14
DRILLER Cleveland/Woodward
INSPECTOR Doug Rogers
CLASSIFIER DRR
EAST/NORTH (ft) 1192846/231849

GROUNDWATER					EQUIPMENT	SAMPLER	CASING	CORE
DATE	TIME	DEPTH (ft)	ELEV. (ft)	BOTTOM OF CASING	TYPE:	S	NW	NX
8/11/14	8:05 am	9.4	10.9	23.0	SIZE I.D. (in):	1.375	3	1.875
					HAMMER WT. (lb):	140	DRILL RIG	
					HAMMER FALL (in):	30	CME 45-C Track rig	
					HAMMER TYPE:	Automatic		

DEPTH (ft)	STRATUM CHANGE (ft) DEPTH	ELEVATION	BLOWS PER 0.5 ft	SAMPLE NUMBER	SAMPLER RECOVERY (ft) [%]	DEPTH RANGE (ft)	FIELD CLASSIFICATION AND REMARKS
0	0.7	19.6				0.0	Dark brown, sandy LOAM (TOPSOIL)
			1 1 1 3	S1	1.4 [70]	2.0	Grey and olive grey, SILT to clayey SILT ("blocky" structure from 1.1') -MARINE DEPOSIT-
			3 5 11 14	S2	1.7 [85]	4.0	Very stiff, olive grey, clayey SILT, few very dark reddish brown mottles
5			3 7 8 10	S3	1.7 [85]	6.0	Stiff, olive-olive grey and grey, clayey SILT/silty CLAY, w/ very dark reddish brown mottles throughout (manganese)
			3 6 6 6	S4	1.8 [90]	8.0	Stiff, olive grey-olive, silty CLAY, w/ isolated very dark reddish brown mottle
			3 4 6 6	S5	1.9 [95]	10.0	Stiff, olive-olive grey and grey, silty CLAY, isolated very dark reddish brown mottle
10			3 4 4 5	S6	2.0 [100]	12.0	Stiff, olive grey w/ traces of yellowish brown, silty CLAY
			2 1 1 0	S7	2.0 [100]	17.0	Very soft, grey, silty CLAY
			WOH WOH WOH WOH	S8	2.0 [100]	20.0	Very soft, grey, silty CLAY to clayey SILT
15	21.8	-1.5					Advanced hole to 23.0'; noted occasional stone from 21.8'
			10 3 4 3	S9	1.0 [50]	25.0	Olive brown, silty MEDIUM-FINE SAND, somee gravel, little coarse sand over medium stiff, grey, clayey SILT w/ yellowish brown fine sand layer
20			5 15 23 23	S10	1.2 [60]	27.0	Dense, light olive brown-olive brown, silty FINE SAND, little gravel, some coarse-medium sand, occasional very severely weathered rock fragment -GLACIAL TILL-

Sampler	Identification
S	Standard Split Spoon
SL	Large Spoon (O.D.= 3 in)
T	Thin Wall Tube
U	Undisturbed Piston
O	Open End Rod
A	Auger Flight
C	Core Barrel
NR	Not Recorded

COHESIVE SOILS Blows/foot (N)	Consistency
0 - 1	Very Soft
2 - 4	Soft
5 - 8	Medium Stiff
9 - 15	Stiff
16 - 30	Very Stiff
> 30	Hard

NON-COHESIVE SOILS Blows/foot (N)	Apparent Density
0 - 4	Very Loose
5 - 10	Loose
11 - 30	Medium Dense
31 - 50	Dense
> 50	Very Dense

WOR - Weight of Rod
WOH - Weight of Hammer

Soil Descriptions	Proportion
Capitalized Soil Name	Major Component
Lower Case Adjective	35% - 50%
Some	20% - 35%
Little	10% - 20%
Trace	1% - 10%

ENGLISH

TB-12 S:\MATERIALS-RESEARCH\GINTW\PROJECTS\DURHAM\16236\16236-801-TEST BORINGS.GPJ 9/19/2014 2:40:50 PM TB-12

PRELIMINARY PLANS
SUBJECT TO CHANGE
DATE 1/29/2018

GM2 ASSOCIATES

SUBDIRECTORY	.DGN LOCATOR	SHEET SCALE
BRD/Details	16236Borings	1"-3'-0"(VERT.)

STATE OF NEW HAMPSHIRE
DEPARTMENT OF TRANSPORTATION * BUREAU OF BRIDGE DESIGN

TOWN DURHAM BRIDGE NO. 145\116 STATE PROJECT 16236
LOCATION US ROUTE 4 OVER BUNKER CREEK

BORINGS SHEET (8 OF 13)

REVISIONS AFTER PROPOSAL

	BY	DATE		BY	DATE
DESIGNED	BAW	1/15	CHECKED	TPL	5/15
DRAWN	TEM	10/17	CHECKED	TPL	10/17
QUANTITIES	---	---	CHECKED	---	---

ISSUE DATE
REV. DATE

FEDERAL PROJECT NO. X-A001(202)
SHEET NO. 11
TOTAL SHEETS 18
BRIDGE SHEET 10 OF
FILE NUMBER -

TEST BORING REPORT

STATE OF NEW HAMPSHIRE DEPARTMENT OF TRANSPORTATION
MATERIALS & RESEARCH BUREAU - GEOTECHNICAL SECTION

PROJECT NAME **DURHAM 16236** BRIDGE NO. N/A
DESCRIPTION US Route 4 Roadway

BORING NO. **B101**
SHEET NO. 2 OF 2
STA. 120+09 OFF. LT 42
BASELINE US Route 4
ELEVATION (ft) 20.3

DEPTH (ft)	STRATUM CHANGE (ft) DEPTH	ELEVATION	BLOWS PER 0.5 ft	SAMPLE NUMBER	SAMPLER RECOVERY (ft) [%]	DEPTH RANGE (ft)	FIELD CLASSIFICATION AND REMARKS	STRATUM SYMBOL
30						30.3	Advanced hole to 30.3' w/ roller bit; cutting steady (boulder) from 30.0'	
							-GLACIAL TILL-	
				C1	0.9 [53]	32.0	Cored through remainder of boulder (30.0-31.2') and into glacial till soil	
35			28 25/0.2	S11	0.6 [86]	32.7	Light olive brown-olive, silty MEDIUM-FINE SAND, some coarse sand, little gravel, w/ occasional very severely weathered rock fragment, split-spoon refusal at 32.7'	
							Bottom of Exploration @ 32.7 ft (El. - 12.4)	

TB-12 S:\MATERIALS-RESEARCH\GINTW\PROJECTS\DURHAM\16236\16236-801-TEST BORINGS.GPJ 9/19/2014 2:40:50 PM TB-12

TEST BORING REPORT

STATE OF NEW HAMPSHIRE DEPARTMENT OF TRANSPORTATION
MATERIALS & RESEARCH BUREAU - GEOTECHNICAL SECTION

PROJECT NAME **DURHAM 16236** BRIDGE NO. N/A
DESCRIPTION US Route 4 Roadway

BORING NO. **B102**
SHEET NO. 1 OF 1
STA. 122+00 OFF. LT 13
BASELINE US Route 4
ELEVATION (ft) 34.8
START/END 8/27/14 / 8/27/14
DRILLER C. Cleveland (NHDOT)
INSPECTOR Scott Myers
CLASSIFIER SFM
EAST/NORTH (ft) 1193022/231769

GROUNDWATER DATE	TIME	DEPTH (ft)	ELEV. (ft)	BOTTOM OF CASING	BOTTOM OF HOLE
8/27/14	11:00 am	14.0	20.8	4	14.8

EQUIPMENT	SAMPLER	CASING	CORE
TYPE:	S	NW	NX
SIZE I.D. (in):	1.375	3	1.875
HAMMER WT. (lb):	140	DRILL RIG	
HAMMER FALL (in):	30	CME 45-C Trlr	
HAMMER TYPE:	Automatic		

DEPTH (ft)	STRATUM CHANGE (ft) DEPTH	ELEVATION	BLOWS PER 0.5 ft	SAMPLE NUMBER	SAMPLER RECOVERY (ft) [%]	DEPTH RANGE (ft)	FIELD CLASSIFICATION AND REMARKS	STRATU SYMBO
0							-ASPHALT PAVEMENT-	
	1.5	33.3	39 38 31 24	S1	1.3 [65]	1.5–3.5	Very dense, dark brown to yellow brown, gravelly FINE SAND, little medium sand, trace coarse sand, trace silt	
							-FILL-	
	4.0	30.8	13 25 92	S2	1.1 [65]	4.0–5.7	Light olive brown, FINE SAND, some silt, little gravel, trace coarse - medium sand, w/ cobbles likely -GLACIAL TILL-	
5	5.0	29.8					Pulverized Rock in spoon -APPROXIMATE BEDROCK SURFACE-	
				C1	1.6 [94]	5.7–7.4	Hard, very slightly weathered, dark gray, coarse grained, DIORITE RQD = 1.5/1.7 = 88%	
			56/0.4	S3	0.4 [100]	7.4–7.8	Pulverized Bedrock in spoon	
10				C2	3.5 [88]	7.8–11.8	Most of run: Hard, very slightly weathered, slightly fractured, dark gray, coarse grained, DIORITE From 9.7-10.2' and from 11.0-11.8': Moderately hard, severely weathered, extremely fractured, brownish gray, coarse grained, DIORITE RQD = 2.2/4.0 = 55%	
15				C3	3.0 [100]	11.8–14.8	Hard, very slightly weathered, slightly fractured to sound, dark gray, coarse grained, DIORITE RQD = 2.9/3.0 = 97%	
							Bottom of Exploration @ 14.8 ft (El. 20.0)	

TB-12 S:\MATERIALS-RESEARCH\GINTW\PROJECTS\DURHAM\16236\16236-801-TEST BORINGS.GPJ 9/19/2014 2:40:51 PM TB-12

TEST BORING REPORT

STATE OF NEW HAMPSHIRE DEPARTMENT OF TRANSPORTATION
MATERIALS & RESEARCH BUREAU - GEOTECHNICAL SECTION

PROJECT **DURHAM** BRIDGE NO.
DESCRIPTION US Route 4 over Bunker Creek

BORING NO. **B201**
SHEET NO. 1 OF 2
STA. OFF.
BASELINE US Route 4
ELEVATION (ft) 8.6
START/END 4/25/2017 / 4/25/2017
DRILLER C. Cleveland (NHDOT)
INSPECTOR Doug Rogers
CLASSIFIER DRR
NORTH/EAST 231985 / 1192289

GROUNDWATER DATE	TIME	DEPTH (ft)	ELEVATION (ft)	BOTTOM OF CASING	BOTTOM OF HOLE
4/25/2017		Tidal	0.0		

EQUIPMENT	SAMPLER	CASING	CORE
TYPE:	S	NW	
SIZE I.D. (in):	1.375	3	
HAMMER WT. (lb):	140	DRILL RIG	
HAMMER FALL (in):	30	CME 45-C Trlr	
HAMMER TYPE:			

DEPTH (ft)	STRATA CHANGE (ft)	BOUNDARY ELEVATION (ft)	BLOWS PER 0.5 ft	SAMPLE NUMBER	SAMPLER RECOVERY (ft) [%]	DEPTH RANGE (ft)	FIELD CLASSIFICATION AND REMARKS	STRATA SYMBOL
0							-BITUMINOUS PAVEMENT- Advanced hole utilizing 4" roller bit through asphalt	
	1.3	7.3	16 17 23 13	S1	1.2 [60]	1.5–3.5	Medium dense, yellowish brown w/ traces of greyish brown, gravelly MEDIUM-FINE SAND, little-trace coarse sand, little silt	
							-FILL-	
5			8 8 6 6	S2	0.5 [25]	4.0–6.0	Medium dense, olive-light olive brown, silty FINE SAND, some gravel to "gravelly", little coarse-medium sand	
			6 6 3 3	S3	0.5 [25]	6.0–8.0	Loose, grey, angular gravel-sized rock fragments, trace coarse-medium sand	
			2 2 2 1	S4	0.7 [35]	8.0–10.0	Very loose, grey and light grey, clayey SILT, trace fine gravel, isolated root fiber	
10	11.0	-2.5	1 2 2 3	S5	0.8 [40]	10.0–12.0	Grey and dark grey, SILT and clayey SILT, trace gravel, isolated wood fragment	
			3 2 4 4	S6	1.8 [90]	13.0–15.0	Medium stiff, grey-olive grey, clayey SILT, w/ occasional very thin yellowish brown silt partings	
15			3 3 5 4	S7	1.7 [85]	15.0–17.0	Medium stiff, similar to S6	
							-MARINE DEPOSIT-	
20			WOH WOH WOH 1	S8	2.0 [100]	20.0–22.0	Very soft, olive and olive grey, clayey SILT to silty CLAY	
25			WOH WOH WOH WOH	S9	2.0 [100]	25.0–27.0	Very soft, grey, clayey SILT/silty CLAY	

TB-01 S:\MATERIALS-RESEARCH\GINTW\PROJECTS\DURHAM\16236\16236-BRIDGE TEST BORINGS.GPJ 5/2/2017 7:20:40 AM TB-01

Sampler	Identification
S	Standard Split Spoon
SL	Large Spoon (O.D.= 3 in)
T	Thin Wall Tube
U	Undisturbed Piston
O	Open End Rod
A	Auger Flight
C	Core Barrel
NR	Not Recorded

COHESIVE SOILS Blows/foot (N)	Consistency
0 - 1	Very Soft
2 - 4	Soft
5 - 8	Medium Stiff
9 - 15	Stiff
16 - 30	Very Stiff
> 30	Hard

NON-COHESIVE SOILS Blows/foot (N)	Apparent Density
0 - 4	Very Loose
5 - 10	Loose
11 - 30	Medium Dense
31 - 50	Dense
> 50	Very Dense

WOR - Weight of Rod
WOH - Weight of Hammer

Soil Descriptions	Proportion
Capitalized Soil Name	Major Component
Lower Case Adjective	35% - 50%
Some	20% - 35%
Little	10% - 20%
Trace	1% - 10%

ENGLISH

Sampler	Identification
S	Split Spoon
T	Thin Wall Tube
U	Undisturbed Piston
O	Open End Rod
A	Auger Flight
C	Core Barrel

COHESIVE SOILS Blows/foot	Consistency
0 - 1	Very Soft
2 - 4	Soft
5 - 8	Medium Stiff
9 - 15	Stiff
16 - 30	Very Stiff
31 - 60	Hard
> 60	Very Hard

NON-COHESIVE SOILS Blows/foot	Density
0 - 4	Very Loose
5 - 10	Loose
11 - 24	Medium Dense
25 - 50	Dense
> 50	Very Dense

WOR - Weight of Rod
WOH - Weight of Hammer

Soil Descriptions	Proportion
Capitalized Soil Name	Major Component
Lower Case Adjective	35% - 50%
Some	20% - 35%
Little	10% - 20%
Trace	1% - 10%

ENGLISH

PRELIMINARY PLANS
SUBJECT TO CHANGE
DATE 1/29/2018

GM2 ASSOCIATES

SUBDIRECTORY	.DGN LOCATOR	SHEET SCALE
BRD/Details	16236Borings	1"=3'-0"(VERT.)

STATE OF NEW HAMPSHIRE
DEPARTMENT OF TRANSPORTATION * BUREAU OF BRIDGE DESIGN

TOWN DURHAM BRIDGE NO. 145\116 STATE PROJECT 16236
LOCATION US ROUTE 4 OVER BUNKER CREEK

BORINGS SHEET (9 OF 13)

REVISIONS AFTER PROPOSAL		BY	DATE		BY	DATE
	DESIGNED	BAW	1/15	CHECKED	TPL	5/15
	DRAWN	TEM	10/17	CHECKED	TPL	10/17
	QUANTITIES	---	---	CHECKED	---	---

ISSUE DATE	FEDERAL PROJECT NO.	SHEET NO.	TOTAL SHEETS
REV. DATE	X-A001(202)	12	18

BRIDGE SHEET 11 OF
FILE NUMBER -

TEST BORING REPORT

STATE OF NEW HAMPSHIRE DEPARTMENT OF TRANSPORTATION
MATERIALS & RESEARCH BUREAU - GEOTECHNICAL SECTION

PROJECT **DURHAM** BRIDGE NO. _____
DESCRIPTION US Route 4 over Bunker Creek

BORING NO. **B201**
SHEET NO. 2 OF 2
STA. _____ OFF. _____
BASELINE US Route 4
ELEVATION (ft) 8.6

DEPTH (ft)	STRATA CHANGE (ft)	BOUNDARY ELEVATION (ft)	BLOWS PER 0.5 ft	SAMPLE NUMBER	SAMPLER RECOVERY (ft) [%]	DEPTH RANGE (ft)	FIELD CLASSIFICATION AND REMARKS	STRATA SYMBOL
30			WOR WOH WOH 1	S10	2.0 [100]	30.0 – 32.0	Very soft, grey, clayey SILT	
35			WOR WOR WOH WOH	S11	2.0 [100]	35.0 – 37.0	Very soft, grey, clayey SILT	
40							Advanced hole to 45.0' utilizing 3" roller bit; no obstruction was observed during the advancement; return washwater remained grey in color and the end of the roller bit was covered with silt at 45.0'	
45							Bottom of Exploration @ 45.0 ft (EL. -36.5 ft)	

TEST BORING REPORT

STATE OF NEW HAMPSHIRE DEPARTMENT OF TRANSPORTATION
MATERIALS & RESEARCH BUREAU - GEOTECHNICAL SECTION

PROJECT **DURHAM** BRIDGE NO. _____
DESCRIPTION US Route 4 over Bunker Creek

BORING NO. **B202**
SHEET NO. 1 OF 1
STA. _____ OFF. _____
BASELINE US Route 4
ELEVATION (ft) 7.3
START/END 4/24/2017 / 4/24/2017
DRILLER C. Cleveland (NHDOT)
INSPECTOR Doug Rogers
CLASSIFIER DRR
NORTH/EAST 231954 / 1192384

GROUNDWATER					
DATE	TIME	DEPTH (ft)	ELEVATION (ft)	BOTTOM OF CASING	BOTTOM OF HOLE
4/24/2017		Tidal	0.0		

EQUIPMENT	SAMPLER	CASING	CORE
TYPE:	S	NW	
SIZE I.D. (in):	1.375	3	
HAMMER WT. (lb):	140	DRILL RIG	
HAMMER FALL (in):	30	CME 45-C Trlr	
HAMMER TYPE:			

DEPTH (ft)	STRATA CHANGE (ft)	BOUNDARY ELEVATION (ft)	BLOWS PER 0.5 ft	SAMPLE NUMBER	SAMPLER RECOVERY (ft) [%]	DEPTH RANGE (ft)	FIELD CLASSIFICATION AND REMARKS	STRATA SYMBOL
0							-BITUMINOUS PAVEMENT- Advanced hole utilizing 4" roller bit through asphalt	
	1.3	6.0	15 23 29 13	S1	1.4 [70]	1.5 – 3.5	Very dense, yellowish brown and dark yellowish brown, gravelly COARSE-FINE SAND, little silt	
							-FILL-	
5			10 8 5 5	S2	0.7 [35]	4.0 – 6.0	Medium dense, olive grey and light olive brown, SILT, little gravel, little-trace coarse-medium sand, over dark yellowish brown, COARSE-FINE SAND, some gravel, trace silt	
			5 3 2 1	S3	0.4 [20]	6.0 – 8.0	Loose, yellowish brown, MEDIUM-FINE SAND, little fine gravel, little coarse sand, little-trace silt	
			2 1 4 6	S4	0.5 [25]	8.0 – 10.0	Loose, grey and greenish grey, SILT, trace clay, mixed w/ yellowish brown, MEDIUM-FINE SAND, trace gravel, trace coarse sand	
10	9.5	-2.2	7 3 3 3	S5	0.8 [40]	10.0 – 12.0	Grey-greenish grey, silty COARSE-FINE SAND, over medium stiff, dark greenish grey, silty MUCK, occasional sea shell fragment	
							-MARINE DEPOSIT- (Tidal)	
15			WOH WOH WOH WOH	S6	1.8 [90]	15.0 – 17.0	Very soft, greenish grey-dark grey, silty MUCK, occasional sea shell fragment	
	17.5	-10.2					Noted washwater change to grey-light grey at approximately 17.5'	
20			2 4 5 5	S7	1.0 [50]	20.0 – 22.0	Stiff, grey, silty CLAY/clayey SILT	
							Bottom of Exploration @ 22.0 ft (EL. -14.7 ft)	

Sampler	Identification
S	Split Spoon
T	Thin Wall Tube
U	Undisturbed Piston
O	Open End Rod
A	Auger Flight
C	Core Barrel

COHESIVE SOILS Blows/foot	Consistency
0 - 1	Very Soft
2 - 4	Soft
5 - 8	Medium Stiff
9 - 15	Stiff
16 - 30	Very Stiff
31 - 60	Hard
> 60	Very Hard

NON-COHESIVE SOILS Blows/foot	Density
0 - 4	Very Loose
5 - 10	Loose
11 - 24	Medium Dense
25 - 50	Dense
> 50	Very Dense

WOR - Weight of Rod
WOH - Weight of Hammer

Soil Descriptions	Proportion
Capitalized Soil Name	Major Component
Lower Case Adjective	35% - 50%
Some	20% - 35%
Little	10% - 20%
Trace	1% - 10%

ENGLISH

TEST BORING REPORT

STATE OF NEW HAMPSHIRE DEPARTMENT OF TRANSPORTATION
MATERIALS & RESEARCH BUREAU - GEOTECHNICAL SECTION

PROJECT **DURHAM** BRIDGE NO. _____
DESCRIPTION US Route 4 over Bunker Creek

BORING NO. **B203**
SHEET NO. 1 OF 1
STA. _____ OFF. _____
BASELINE US Route 4
ELEVATION (ft) 6.4
START/END 4/24/2017 / 4/24/2017
DRILLER C. Cleveland (NHDOT)
INSPECTOR Doug Rogers
CLASSIFIER DRR
NORTH/EAST 231925 / 1192478

GROUNDWATER					
DATE	TIME	DEPTH (ft)	ELEVATION (ft)	BOTTOM OF CASING	BOTTOM OF HOLE
4/24/2017		Tidal	0.0		

EQUIPMENT	SAMPLER	CASING	CORE
TYPE:	S	NW	NX
SIZE I.D. (in):	1.375	3	1.875
HAMMER WT. (lb):	140	DRILL RIG	
HAMMER FALL (in):	30	CME 45-C Trlr	
HAMMER TYPE:			

DEPTH (ft)	STRATA CHANGE (ft)	BOUNDARY ELEVATION (ft)	BLOWS PER 0.5 ft	SAMPLE NUMBER	SAMPLER RECOVERY (ft) [%]	DEPTH RANGE (ft)	FIELD CLASSIFICATION AND REMARKS	STRATA SYMBOL
0							-BITUMINOUS PAVEMENT- Advanced to 1.0' w/ 4" roller bit through asphalt	
	1.0	5.4	15 27 26 17	S1	0.9 [45]	1.0 – 3.0	Very dense, dark greyish brown to dark yellowish brown, gravelly COARSE-FINE SAND, little-trace silt	
			11 23 16 9	S2	0.6 [30]	3.0 – 5.0	Dense, dark yellowish brown, MEDIUM-FINE SAND, some gravel, little coarse sand, little silt	
							-FILL-	
5			7 6 3 4	S3	0.4 [20]	5.0 – 7.0	Loose, yellowish brown, medium-fine sandy GRAVEL, little-trace silt	
			21 6 16/0.3	S4	0.5 [38]	7.0 – 8.3	Dark greyish brown and dark yellowish brown, medium-fine sandy GRAVEL, mixed w/ dark greenish grey, silty MUCK (tidal), refusal at 8.3' on boulder; advanced to 8.5' w/ 3" roller bit	
				C1	1.3 [76]	8.5 – 10.2	Advanced w/ Nx core barrel through remainder of boulder (8.3-9.7')	
10	10.0	-3.6	1 2 3 11	S5	1.3 [65]	10.2 – 12.2	Loose, greyish brown, MEDIUM-FINE SAND, slight trace of silt	
							-MARINE DEPOSIT-	
							Bottom of Exploration @ 12.2 ft (EL. -5.8 ft)	

Sampler	Identification
S	Split Spoon
T	Thin Wall Tube
U	Undisturbed Piston
O	Open End Rod
A	Auger Flight
C	Core Barrel

COHESIVE SOILS Blows/foot	Consistency
0 - 1	Very Soft
2 - 4	Soft
5 - 8	Medium Stiff
9 - 15	Stiff
16 - 30	Very Stiff
31 - 60	Hard
> 60	Very Hard

NON-COHESIVE SOILS Blows/foot	Density
0 - 4	Very Loose
5 - 10	Loose
11 - 24	Medium Dense
25 - 50	Dense
> 50	Very Dense

WOR - Weight of Rod
WOH - Weight of Hammer

Soil Descriptions	Proportion
Capitalized Soil Name	Major Component
Lower Case Adjective	35% - 50%
Some	20% - 35%
Little	10% - 20%
Trace	1% - 10%

ENGLISH

PRELIMINARY PLANS
SUBJECT TO CHANGE
DATE 1/29/2018

GM2 ASSOCIATES

SUBDIRECTORY	.DGN LOCATOR	SHEET SCALE
BRD/Details	16236Borings	1"-3'-0"(VERT.)

STATE OF NEW HAMPSHIRE
DEPARTMENT OF TRANSPORTATION * BUREAU OF BRIDGE DESIGN

TOWN DURHAM BRIDGE NO. 145\116 STATE PROJECT 16236
LOCATION US ROUTE 4 OVER BUNKER CREEK

BORINGS SHEET (10 OF 13)

REVISIONS AFTER PROPOSAL		BY	DATE		BY	DATE
	DESIGNED	BAW	1/15	CHECKED	TPL	5/15
	DRAWN	TEM	10/17	CHECKED	TPL	10/17
	QUANTITIES	---	---	CHECKED	---	---

ISSUE DATE	FEDERAL PROJECT NO.	SHEET NO.	TOTAL SHEETS
REV. DATE	X-A001(202)	13	18

BRIDGE SHEET 12 OF
FILE NUMBER -

TB-01 S:\MATERIALS-RESEARCH\GINTW\PROJECTS\DURHAM\16236\16236-BRIDGE TEST BORINGS.GPJ 5/2/2017 7:20:40 AM TB-01

TB-01 S:\MATERIALS-RESEARCH\GINTW\PROJECTS\DURHAM\16236\16236-BRIDGE TEST BORINGS.GPJ 5/2/2017 7:20:41 AM TB-01

TB-01 S:\MATERIALS-RESEARCH\GINTW\PROJECTS\DURHAM\16236\16236-BRIDGE TEST BORINGS.GPJ 5/2/2017 7:20:42 AM TB-01

TEST BORING REPORT

STATE OF NEW HAMPSHIRE DEPARTMENT OF TRANSPORTATION
MATERIALS & RESEARCH BUREAU - GEOTECHNICAL SECTION

PROJECT **DURHAM** BRIDGE NO. _____
DESCRIPTION US Route 4 over Bunker Creek

BORING NO. **B204**
SHEET NO. 1 OF 1
STA. _____ OFF. _____
BASELINE US Route 4
ELEVATION (ft) 15.6
START/END 4/27/2017 / 4/27/2017
DRILLER J. Kibbee (NHDOT)
INSPECTOR Doug Rogers
CLASSIFIER DRR
NORTH/EAST 231891 / 1192737

GROUNDWATER						EQUIPMENT	SAMPLER	CASING	CORE
DATE	TIME	DEPTH (ft)	ELEVATION (ft)	BOTTOM OF CASING	BOTTOM OF HOLE	TYPE:	S	NW	NX
						SIZE I.D. (in):	1.375	3	1.875
4/27/2017	11:00 am	4.0	11.6	4.0	9.0	HAMMER WT. (lb):	140	DRILL RIG	
4/27/2017	11:15 am	3.7	11.9	4	9	HAMMER FALL (in):	30	CME 45-C Track rig	
4/27/2017	11:20 am	3.6	12.0	4	9	HAMMER TYPE:			

DEPTH (ft)	STRATA CHANGE (ft)	BOUNDARY ELEVATION (ft)	BLOWS PER 0.5 ft	SAMPLE NUMBER	SAMPLER RECOVERY (ft) [%]	DEPTH RANGE (ft)	FIELD CLASSIFICATION AND REMARKS	STRATA SYMBOL
0			WOH 3/0.1	S1	0.4 [67]	0.0–0.6	Dark brown, loamy TOPSOIL, refusal on boulder at 0.6' -FILL- Advanced hole by spinning 3" drill casing to 4.0'; encountered small boulder and small cobbles to 2.9', then cutting steady from approximately 2.9' to 4.0' utilizing 3" roller bit	
	2.9	12.7					-APPROXIMATE BEDROCK SURFACE-	
5				C1	4.9 [98]	4.0–9.0	Hard, very slightly weathered to fresh, sound to moderately fractured, grey and black, coarse-medium grained, DIORITE. Joints are shallow dipping w/ exception of moderately dipping silt-coated joint surface at 6.1'.	

Bottom of Exploration @ 9.0 ft (EL. 6.6 ft)

Sampler	Identification
S	Split Spoon
T	Thin Wall Tube
U	Undisturbed Piston
O	Open End Rod
A	Auger Flight
C	Core Barrel

COHESIVE SOILS Blows/foot	Consistency
0 - 1	Very Soft
2 - 4	Soft
5 - 8	Medium Stiff
9 - 15	Stiff
16 - 30	Very Stiff
31 - 60	Hard
> 60	Very Hard

NON-COHESIVE SOILS Blows/foot	Density
0 - 4	Very Loose
5 - 10	Loose
11 - 24	Medium Dense
25 - 50	Dense
> 50	Very Dense

WOR - Weight of Rod
WOH - Weight of Hammer

Soil Descriptions	Proportion
Capitalized Soil Name	Major Component
Lower Case Adjective	35% - 50%
Some	20% - 35%
Little	10% - 20%
Trace	1% - 10%

ENGLISH

TB-01 S:\MATERIALS-RESEARCH\GINTW\PROJECTS\DURHAM\16236\16236-BRIDGE TEST BORINGS.GPJ 5/2/2017 7:20:43 AM TB-01

TEST BORING REPORT

STATE OF NEW HAMPSHIRE DEPARTMENT OF TRANSPORTATION
MATERIALS & RESEARCH BUREAU - GEOTECHNICAL SECTION

PROJECT **DURHAM** BRIDGE NO. _____
DESCRIPTION US Route 4 over Bunker Creek

BORING NO. **B205**
SHEET NO. 1 OF 1
STA. _____ OFF. _____
BASELINE US Route 4
ELEVATION (ft) 28.3
START/END 4/27/2017 / 4/27/2017
DRILLER J. Kibbee (NHDOT)
INSPECTOR Doug Rogers
CLASSIFIER DRR
NORTH/EAST 231816 / 1192942

GROUNDWATER						EQUIPMENT	SAMPLER	CASING	CORE
DATE	TIME	DEPTH (ft)	ELEVATION (ft)	BOTTOM OF CASING	BOTTOM OF HOLE	TYPE:	S	NW	
						SIZE I.D. (in):	1.375	3	
4/27/2017	12:50 pm	0.9	27.4	N/A	9.0	HAMMER WT. (lb):	140	DRILL RIG	
4/27/2017	1:30 pm	0.9	27.4	N/A	9	HAMMER FALL (in):	30	CME 45-C Track rig	
						HAMMER TYPE:			

DEPTH (ft)	STRATA CHANGE (ft)	BOUNDARY ELEVATION (ft)	BLOWS PER 0.5 ft	SAMPLE NUMBER	SAMPLER RECOVERY (ft) [%]	DEPTH RANGE (ft)	FIELD CLASSIFICATION AND REMARKS	STRATA SYMBOL
0	0.6	27.7	WOH 1 5 5	S1	0.8 [40]	0.0–2.0	Dark brown, loamy TOPSOIL Loose, dark greyish brown, SILT, little gravel, little-trace coarse-medium sand, trace clay -FILL-	
	2.0	26.3	3 4 6 9	S2	1.4 [70]	2.0–4.0	Stiff, olive-olive grey, SILT, little clay to "clayey", w/ frequent very dark reddish brown mottles (manganese precipitate)	
5			5 6 8 9	S3	1.9 [95]	4.0–5.0 5.0–7.0	-MARINE DEPOSIT- Stiff, olive-olive grey, clayey SILT	
			4 6 7 9	S4	1.7 [85]	7.0–9.0	Stiff, similar to S3, yellowish brown silty fine sand in end of spoon tip	

Bottom of Exploration @ 9.0 ft (EL. 19.3 ft)

Sampler	Identification
S	Split Spoon
T	Thin Wall Tube
U	Undisturbed Piston
O	Open End Rod
A	Auger Flight
C	Core Barrel

COHESIVE SOILS Blows/foot	Consistency
0 - 1	Very Soft
2 - 4	Soft
5 - 8	Medium Stiff
9 - 15	Stiff
16 - 30	Very Stiff
31 - 60	Hard
> 60	Very Hard

NON-COHESIVE SOILS Blows/foot	Density
0 - 4	Very Loose
5 - 10	Loose
11 - 24	Medium Dense
25 - 50	Dense
> 50	Very Dense

WOR - Weight of Rod
WOH - Weight of Hammer

Soil Descriptions	Proportion
Capitalized Soil Name	Major Component
Lower Case Adjective	35% - 50%
Some	20% - 35%
Little	10% - 20%
Trace	1% - 10%

ENGLISH

TB-01 S:\MATERIALS-RESEARCH\GINTW\PROJECTS\DURHAM\16236\16236-BRIDGE TEST BORINGS.GPJ 5/2/2017 7:20:43 AM TB-01

TEST BORING REPORT

STATE OF NEW HAMPSHIRE DEPARTMENT OF TRANSPORTATION
MATERIALS & RESEARCH BUREAU - GEOTECHNICAL SECTION

PROJECT **DURHAM** BRIDGE NO. _____
DESCRIPTION US Route 4 over Bunker Creek

BORING NO. **B206**
SHEET NO. 1 OF 1
STA. _____ OFF. _____
BASELINE US Route 4
ELEVATION (ft) 38.1
START/END 4/12/2017 / 4/12/2017
DRILLER C. Cleveland (NHDOT)
INSPECTOR Doug Rogers
CLASSIFIER DRR
NORTH/EAST 231753 / 1193132

GROUNDWATER						EQUIPMENT	SAMPLER	CASING	CORE
DATE	TIME	DEPTH (ft)	ELEVATION (ft)	BOTTOM OF CASING	BOTTOM OF HOLE	TYPE:	S	NW	
						SIZE I.D. (in):	1.375	3	
4/12/2017	12:55 pm	3.7	34.4	8.0	10.0	HAMMER WT. (lb):	140	DRILL RIG	
4/12/2017	1:15 pm	3.7	34.4	8.0	10.0	HAMMER FALL (in):	30	CME 45-C Trlr	
4/13/2017	9:00 am	3.6	34.5	N/A	3.9	HAMMER TYPE:			

DEPTH (ft)	STRATA CHANGE (ft)	BOUNDARY ELEVATION (ft)	BLOWS PER 0.5 ft	SAMPLE NUMBER	SAMPLER RECOVERY (ft) [%]	DEPTH RANGE (ft)	FIELD CLASSIFICATION AND REMARKS	STRATA SYMBOL
0			2 6 7 10	S1	0.7 [35]	0.0–2.0	Medium dense, some-little gravel, some-little medium sand, little-trace silt, trace coarse sand	
			8 8 3 3	S2	0.9 [45]	2.0–4.0	Medium dense, yellowish brown-dark yellowish brown, MEDIUM-FINE SAND, some-little gravel, little coarse sand, little silt, over olive grey, clayey SILT w/ piece of 3/4" bituminous pavement wedged in end of spoon tip	
5	6.0	32.1	3 2 2 2	S3	0.3 [15]	4.0–6.0	Very loose, olive, SILT, some coarse-medium sand, little-trace clay, isolated twig -FILL-	
			5 12 12 13	S4	0.6 [30]	6.0–8.0	Very stiff, olive and olive grey, SILT, little clay to "clayey", slight trace coarse-medium sand -MARINE DEPOSIT-	
			5 8 11 12	S5	2.0 [100]	8.0–10.0	Very stiff, olive and olive grey, clayey SILT, w/ occasional very dark reddish brown mottle (manganese precipitate)	

Bottom of Exploration @ 10.0 ft (EL. 28.1 ft)

Sampler	Identification
S	Split Spoon
T	Thin Wall Tube
U	Undisturbed Piston
O	Open End Rod
A	Auger Flight
C	Core Barrel

COHESIVE SOILS Blows/foot	Consistency
0 - 1	Very Soft
2 - 4	Soft
5 - 8	Medium Stiff
9 - 15	Stiff
16 - 30	Very Stiff
31 - 60	Hard
> 60	Very Hard

NON-COHESIVE SOILS Blows/foot	Density
0 - 4	Very Loose
5 - 10	Loose
11 - 24	Medium Dense
25 - 50	Dense
> 50	Very Dense

WOR - Weight of Rod
WOH - Weight of Hammer

Soil Descriptions	Proportion
Capitalized Soil Name	Major Component
Lower Case Adjective	35% - 50%
Some	20% - 35%
Little	10% - 20%
Trace	1% - 10%

ENGLISH

TB-01 S:\MATERIALS-RESEARCH\GINTW\PROJECTS\DURHAM\16236\16236-BRIDGE TEST BORINGS.GPJ 5/2/2017 7:20:44 AM TB-01

PRELIMINARY PLANS
SUBJECT TO CHANGE
DATE 1/29/2018

GM2 ASSOCIATES

SUBDIRECTORY	.DGN LOCATOR	SHEET SCALE
BRD/Details	16236Borings	1"-3'-0"(VERT.)

STATE OF NEW HAMPSHIRE
DEPARTMENT OF TRANSPORTATION * BUREAU OF BRIDGE DESIGN

TOWN DURHAM BRIDGE NO. 145\116 STATE PROJECT 16236
LOCATION US ROUTE 4 OVER BUNKER CREEK

BORINGS SHEET (11 OF 13)

REVISIONS AFTER PROPOSAL		BY	DATE		BY	DATE
	DESIGNED	BAW	1/15	CHECKED	TPL	5/15
	DRAWN	TEM	10/17	CHECKED	TPL	10/17
	QUANTITIES	---	---	CHECKED	---	---

ISSUE DATE
REV. DATE

FEDERAL PROJECT NO. X-A001(202)
SHEET NO. 14
TOTAL SHEETS 18
BRIDGE SHEET 13 OF
FILE NUMBER -

TEST BORING REPORT

STATE OF NEW HAMPSHIRE DEPARTMENT OF TRANSPORTATION
MATERIALS & RESEARCH BUREAU - GEOTECHNICAL SECTION

PROJECT **DURHAM** BRIDGE NO. _____
DESCRIPTION US Route 4 over Bunker Creek

BORING NO. **B207**
SHEET NO. 1 OF 1
STA. _____ OFF. _____
BASELINE US Route 4
ELEVATION (ft) 39.9
START/END 4/12/2017 / 4/12/2017
DRILLER C. Cleveland (NHDOT)
INSPECTOR Doug Rogers
CLASSIFIER DRR
NORTH/EAST 231726 / 1193233

GROUNDWATER						EQUIPMENT	SAMPLER	CASING	CORE
DATE	TIME	DEPTH (ft)	ELEVATION (ft)	BOTTOM OF CASING	BOTTOM OF HOLE	TYPE:	S	NW	
						SIZE I.D. (in):	1.375	3	
4/12/2017	11:20 am	4.6	35.3	8.0	10.0	HAMMER WT. (lb):	140	DRILL RIG	
4/12/2017	11:40 am	4.2	35.7	8	10	HAMMER FALL (in):	30	CME 45-C Trlr	
						HAMMER TYPE:			

DEPTH (ft)	STRATA CHANGE (ft)	BOUNDARY ELEVATION (ft)	BLOWS PER 0.5 ft	SAMPLE NUMBER	SAMPLER RECOVERY (ft) [%]	DEPTH RANGE (ft)	FIELD CLASSIFICATION AND REMARKS	STRATA SYMBOL
0	0.3	39.6	2 9 11 11	S1	0.6 [30]	0.0 – 2.0	Dark greyish brown, medium-fine sandy TOPSOIL Medium dense, dark yellowish brown, MEDIUM-FINE SAND, some-little gravel, little coarse sand, little silt, w/ isolated small pocket of dark brown silty fine sand	
			11 12 10 7	S2	0.7 [35]	2.0 – 4.0	Medium dense, yellowish brown-dark yellowish brown, MEDIUM-FINE SAND, some-little silt, little gravel, little coarse sand -FILL-	
5			5 3 2 8	S3	0.6 [30]	4.0 – 6.0	Loose, dark yellowish brown and dark greyish brown w/ traces of dark brown, silty MEDIUM-FINE SAND, little gravel, little coarse sand	
	6.3	33.6	4 1 2 2	S4	0.7 [35]	6.0 – 8.0	Dark greyish brown, silty COARSE-FINE SAND, little fine gravel Soft, olive grey, SILT, isolated coarse-medium sand grain, isolated fiber, slight trace of clay -MARINE DEPOSIT-	
10			6 9 13 11	S5	0.5 [25]	8.0 – 10.0	Medium dense, olive-olive grey, SILT, some-little coarse-medium sand, little-trace clay, trace gravel, w/ 2" layer of greyish brown coarse-medium sand	

Bottom of Exploration @ 10.0 ft (EL. 29.9 ft)

Sampler	Identification
S	Split Spoon
T	Thin Wall Tube
U	Undisturbed Piston
O	Open End Rod
A	Auger Flight
C	Core Barrel

COHESIVE SOILS Blows/foot	Consistency
0 - 1	Very Soft
2 - 4	Soft
5 - 8	Medium Stiff
9 - 15	Stiff
16 - 30	Very Stiff
31 - 60	Hard
> 60	Very Hard

NON-COHESIVE SOILS Blows/foot	Density
0 - 4	Very Loose
5 - 10	Loose
11 - 24	Medium Dense
25 - 50	Dense
> 50	Very Dense
WOR - Weight of Rod	
WOH - Weight of Hammer	

Soil Descriptions	Proportion
Capitalized Soil Name	Major Component
Lower Case Adjective	35% - 50%
Some	20% - 35%
Little	10% - 20%
Trace	1% - 10%

ENGLISH

TB-01 S:\MATERIALS-RESEARCH\GINTW\PROJECTS\DURHAM\16236\16236-BRIDGE TEST BORINGS.GPJ 5/2/2017 7:20:45 AM TB-01

TEST BORING REPORT

STATE OF NEW HAMPSHIRE DEPARTMENT OF TRANSPORTATION
MATERIALS & RESEARCH BUREAU - GEOTECHNICAL SECTION

PROJECT **DURHAM** BRIDGE NO. _____
DESCRIPTION US Route 4 over Bunker Creek

BORING NO. **B208**
SHEET NO. 1 OF 1
STA. _____ OFF. _____
BASELINE US Route 4
ELEVATION (ft) 40.5
START/END 4/11/2017 / 4/11/2017
DRILLER C. Cleveland (NHDOT)
INSPECTOR Doug Rogers
CLASSIFIER DRR
NORTH/EAST 231700 / 1193324

GROUNDWATER						EQUIPMENT	SAMPLER	CASING	CORE
DATE	TIME	DEPTH (ft)	ELEVATION (ft)	BOTTOM OF CASING	BOTTOM OF HOLE	TYPE:	S	NW	NX
						SIZE I.D. (in):	1.375	3	1.875
4/11/2017	11:50 am	4.4	36.1	6.5	9.8	HAMMER WT. (lb):	140	DRILL RIG	
4/11/2017	12:30 pm	4.4	36.1	6.5	9.8	HAMMER FALL (in):	30	CME 45-C Trlr	
4/12/2017	9:00 am	4.5	36.0	6.5	9.8	HAMMER TYPE:			

DEPTH (ft)	STRATA CHANGE (ft)	BOUNDARY ELEVATION (ft)	BLOWS PER 0.5 ft	SAMPLE NUMBER	SAMPLER RECOVERY (ft) [%]	DEPTH RANGE (ft)	FIELD CLASSIFICATION AND REMARKS	STRATA SYMBOL
0	0.2	40.3	2 6 9 15	S1	1.1 [55]	0.0 – 2.0	Dark greyish brown, medium-fine sandy TOPSOIL Medium dense, dark yellowish brown, MEDIUM-FINE SAND, some gravel, some-little silt, little-trace coarse sand	
			9 9 10 11	S2	1.2 [60]	2.0 – 4.0	Medium dense, yellowish brown, FINE SAND, some silt, trace coarse sand -FILL-	
5	4.5	36.0	17 15 7 7	S3	0.8 [40]	4.0 – 6.0	Yellowish brown, FINE SAND, some silt Medium dense, olive grey, SILT, little medium sand, little-trace coarse sand, trace gravel, w/ weathered rock fragments throughout -GLACIAL TILL-	
	7.1	33.4	10 25/0.1	S4	0.3 [50]	6.5 – 7.1	Olive-light olive brown, fine sandy SILT, some-little fine gravel, little coarse sand, trace medium sand, w/ weathered rock fragments -APPROXIMATE BEDROCK SURFACE-	
10				C1	4.8 [98]	7.1 – 12.0	Hard, moderately to slightly weathered, extremely fractured to sound, off-white and black, coarse-medium grained, DIORITE. Most all joint surfaces are stained. From approximately 9.9', core is misshaped due to re-entering hole in attempt to retrieve core that was lost during initial entry. RQD: 1.6 / 4.9 = 33%	

Bottom of Exploration @ 12.0 ft (EL. 28.5 ft)

Sampler	Identification
S	Split Spoon
T	Thin Wall Tube
U	Undisturbed Piston
O	Open End Rod
A	Auger Flight
C	Core Barrel

COHESIVE SOILS Blows/foot	Consistency
0 - 1	Very Soft
2 - 4	Soft
5 - 8	Medium Stiff
9 - 15	Stiff
16 - 30	Very Stiff
31 - 60	Hard
> 60	Very Hard

NON-COHESIVE SOILS Blows/foot	Density
0 - 4	Very Loose
5 - 10	Loose
11 - 24	Medium Dense
25 - 50	Dense
> 50	Very Dense
WOR - Weight of Rod	
WOH - Weight of Hammer	

Soil Descriptions	Proportion
Capitalized Soil Name	Major Component
Lower Case Adjective	35% - 50%
Some	20% - 35%
Little	10% - 20%
Trace	1% - 10%

ENGLISH

TB-01 S:\MATERIALS-RESEARCH\GINTW\PROJECTS\DURHAM\16236\16236-BRIDGE TEST BORINGS.GPJ 5/2/2017 7:20:46 AM TB-01

TEST BORING REPORT

STATE OF NEW HAMPSHIRE DEPARTMENT OF TRANSPORTATION
MATERIALS & RESEARCH BUREAU - GEOTECHNICAL SECTION

PROJECT **DURHAM** BRIDGE NO. _____
DESCRIPTION US Route 4 over Bunker Creek

BORING NO. **B209**
SHEET NO. 1 OF 1
STA. _____ OFF. _____
BASELINE US Route 4
ELEVATION (ft) 26.0
START/END 4/13/2017 / 4/13/2017
DRILLER C. Cleveland (NHDOT)
INSPECTOR Doug Rogers
CLASSIFIER DRR
NORTH/EAST 231782 / 1192882

GROUNDWATER						EQUIPMENT	SAMPLER	CASING	CORE
DATE	TIME	DEPTH (ft)	ELEVATION (ft)	BOTTOM OF CASING	BOTTOM OF HOLE	TYPE:	S	NW	
						SIZE I.D. (in):	1.375	3	
4/13/2017	11:30 am	3.2	22.8	6.0	8.0	HAMMER WT. (lb):	140	DRILL RIG	
4/13/2017	11:50 am	3.1	22.9	6.0	8.0	HAMMER FALL (in):	30	CME 45-C Trlr	
						HAMMER TYPE:			

DEPTH (ft)	STRATA CHANGE (ft)	BOUNDARY ELEVATION (ft)	BLOWS PER 0.5 ft	SAMPLE NUMBER	SAMPLER RECOVERY (ft) [%]	DEPTH RANGE (ft)	FIELD CLASSIFICATION AND REMARKS	STRATA SYMBOL
0			2 6 4 4	S1	1.1 [55]	0.0 – 2.0	Loose, yellowish brown and greyish brown, gravelly MEDIUM-FINE SAND, some-little silt, little coarse sand, over dark brown and very dark greyish brown, MEDIUM-FINE SAND, some silt, little fine gravel, little coarse sand -FILL-	
			8 7 5 5	S2	0.9 [45]	2.0 – 4.0	Medium dense, olive-olive grey, SILT, little-trace gravel, trace coarse-medium sand, trace clay, over olive and olive grey, SILT, little-trace clay	
5	4.0	22.0	13 13 10 14	S3	1.2 [60]	4.0 – 6.0	Very stiff, olive-light olive brown, SILT, little clay to "clayey", w/ very dark reddish brown mottles -MARINE DEPOSIT-	
	6.8	19.2	8 10 16 31	S4	1.6 [80]	6.0 – 8.0	Olive-olive grey, clayey SILT, w/ occasional very dark reddish brown mottle Light olive brown, SILT, little-trace clay, trace fine gravel, trace coarse-medium sand, w/ few very severely weathered rock fragments, completely weathered stone in end of spoon tip -GLACIAL TILL-	

Bottom of Exploration @ 8.0 ft (EL. 18.0 ft)

Sampler	Identification
S	Split Spoon
T	Thin Wall Tube
U	Undisturbed Piston
O	Open End Rod
A	Auger Flight
C	Core Barrel

COHESIVE SOILS Blows/foot	Consistency
0 - 1	Very Soft
2 - 4	Soft
5 - 8	Medium Stiff
9 - 15	Stiff
16 - 30	Very Stiff
31 - 60	Hard
> 60	Very Hard

NON-COHESIVE SOILS Blows/foot	Density
0 - 4	Very Loose
5 - 10	Loose
11 - 24	Medium Dense
25 - 50	Dense
> 50	Very Dense
WOR - Weight of Rod	
WOH - Weight of Hammer	

Soil Descriptions	Proportion
Capitalized Soil Name	Major Component
Lower Case Adjective	35% - 50%
Some	20% - 35%
Little	10% - 20%
Trace	1% - 10%

ENGLISH

TB-01 S:\MATERIALS-RESEARCH\GINTW\PROJECTS\DURHAM\16236\16236-BRIDGE TEST BORINGS.GPJ 5/2/2017 7:20:47 AM TB-01

PRELIMINARY PLANS
SUBJECT TO CHANGE
DATE 1/29/2018

GM2 ASSOCIATES

SUBDIRECTORY	.DGN LOCATOR	SHEET SCALE
BRD/Details	16236Borings	1"-3'-0"(VERT.)

STATE OF NEW HAMPSHIRE
DEPARTMENT OF TRANSPORTATION * BUREAU OF BRIDGE DESIGN

TOWN DURHAM BRIDGE NO. 145\116 STATE PROJECT 16236
LOCATION US ROUTE 4 OVER BUNKER CREEK

BORINGS SHEET (12 OF 13)

REVISIONS AFTER PROPOSAL		BY	DATE		BY	DATE
	DESIGNED	BAW	1/15	CHECKED	TPL	5/15
	DRAWN	TEM	10/17	CHECKED	TPL	10/17
	QUANTITIES	---	---	CHECKED	---	---
	ISSUE DATE					
	REV. DATE					

FEDERAL PROJECT NO. X-A001(202)
SHEET NO. 15
TOTAL SHEETS 18
BRIDGE SHEET 14 OF
FILE NUMBER -

TEST BORING REPORT

STATE OF NEW HAMPSHIRE DEPARTMENT OF TRANSPORTATION
MATERIALS & RESEARCH BUREAU - GEOTECHNICAL SECTION

PROJECT **DURHAM** BRIDGE NO. _____
DESCRIPTION US Route 4 over Bunker Creek

BORING NO. **B210**
SHEET NO. 1 OF 1
STA. _____ OFF. _____
BASELINE US Route 4
ELEVATION (ft) 18.6
START/END 4/25/2017 / 4/25/2017
DRILLER J. Kibbee (NHDOT)
INSPECTOR John Woodward
CLASSIFIER DRR
NORTH/EAST 231963 / 1192745

GROUNDWATER						EQUIPMENT	SAMPLER	CASING	CORE
DATE	TIME	DEPTH (ft)	ELEVATION (ft)	BOTTOM OF CASING	BOTTOM OF HOLE	TYPE:	S	NW	NX
4/27/2017	NR					SIZE I.D. (in):	1.375	3	1.875
						HAMMER WT. (lb):	140	DRILL RIG	
						HAMMER FALL (in):	30	CME 45-C Track rig	
						HAMMER TYPE:			

DEPTH (ft)	STRATA CHANGE (ft)	BOUNDARY ELEVATION (ft)	BLOWS PER 0.5 ft	SAMPLE NUMBER	SAMPLER RECOVERY (ft) [%]	DEPTH RANGE (ft)	FIELD CLASSIFICATION AND REMARKS	STRATA SYMBOL
0			WOH WOH 1 2	S1	0.8 [40]	0.0 – 2.0	Very soft, olive-light olive brown, SILT, occasional fiber	
			4 50/0.2	S2	0.5 [71]	2.0 – 2.7	Olive-olive grey, SILT, few fibers, trace clay	
						2.7	Advanced hole w/ Nx wireline through boulder, small cobble, few gravel-sized rock fragments -FILL-	
5				C1	2.1 [33]			
	8.0	10.6					-MARINE DEPOSIT-	
	9.3	9.3	50/0.3	S3	0.2 [67]	9.0 – 9.3	Greyish brown, MEDIUM-FINE SAND	
10						9.3	-APPROXIMATE BEDROCK SURFACE-	
				C2	4.7 [94]	9.3 – 14.3	Hard, very slightly to moderately weathered, moderately fractured to sound, grey and black, coarse-medium grained, DIORITE. Most joint surfaces are discolored, few are silt-coated. RQD: 2.0 / 5.0 = 40%	
						14.3	Bottom of Exploration @ 14.3 ft (EL. 4.3 ft)	

15 10 5 0 -5 -10

TB-01 S:\MATERIALS-RESEARCH\GINTW\PROJECTS\DURHAM\16236\16236-BRIDGE TEST BORINGS.GPJ 5/2/2017 7:20:47 AM TB-01

Sampler	Identification
S	Split Spoon
T	Thin Wall Tube
U	Undisturbed Piston
O	Open End Rod
A	Auger Flight
C	Core Barrel

COHESIVE SOILS Blows/foot	Consistency
0 - 1	Very Soft
2 - 4	Soft
5 - 8	Medium Stiff
9 - 15	Stiff
16 - 30	Very Stiff
31 - 60	Hard
> 60	Very Hard

NON-COHESIVE SOILS Blows/foot	Density
0 - 4	Very Loose
5 - 10	Loose
11 - 24	Medium Dense
25 - 50	Dense
> 50	Very Dense

WOR - Weight of Rod
WOH - Weight of Hammer

Soil Descriptions	Proportion
Capitalized Soil Name	Major Component
Lower Case Adjective	35% - 50%
Some	20% - 35%
Little	10% - 20%
Trace	1% - 10%

ENGLISH

PRELIMINARY PLANS
SUBJECT TO CHANGE
DATE 1/29/2018

GM2 ASSOCIATES

SUBDIRECTORY	.DGN LOCATOR	SHEET SCALE
BRD/Details	16236Borings	1"-3'-0"(VERT.)

STATE OF NEW HAMPSHIRE
DEPARTMENT OF TRANSPORTATION * BUREAU OF BRIDGE DESIGN

TOWN DURHAM BRIDGE NO. 145\116 STATE PROJECT 16236
LOCATION US ROUTE 4 OVER BUNKER CREEK

BORINGS SHEET (13 OF 13)

REVISIONS AFTER PROPOSAL		BY	DATE		BY	DATE
	DESIGNED	BAW	1/15	CHECKED	TPL	5/15
	DRAWN	TEM	10/17	CHECKED	TPL	10/17
	QUANTITIES	---	---	CHECKED	---	---

ISSUE DATE
REV. DATE

FEDERAL PROJECT NO. X-A001(202)
SHEET NO. 16
TOTAL SHEETS 18
BRIDGE SHEET 15 OF
FILE NUMBER -

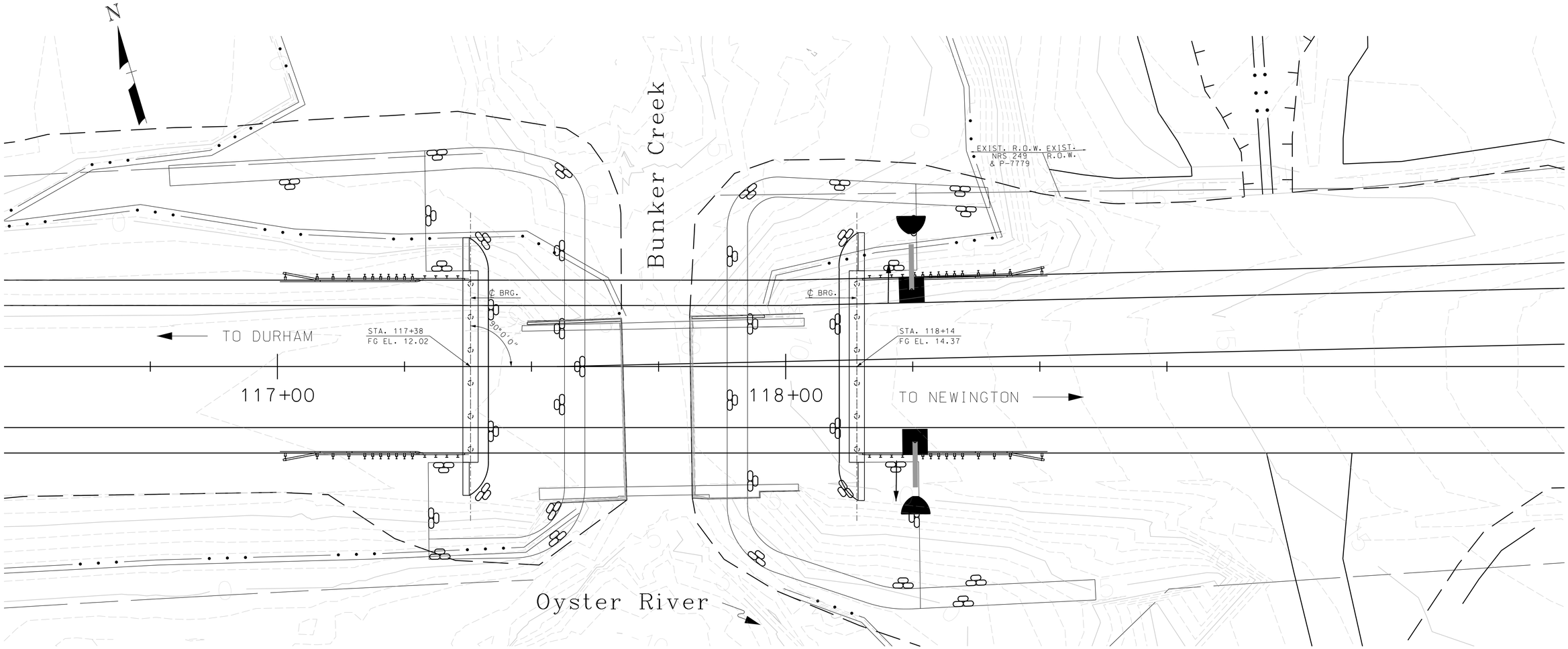

PLAN

SCALE: 1" = 10'-0"

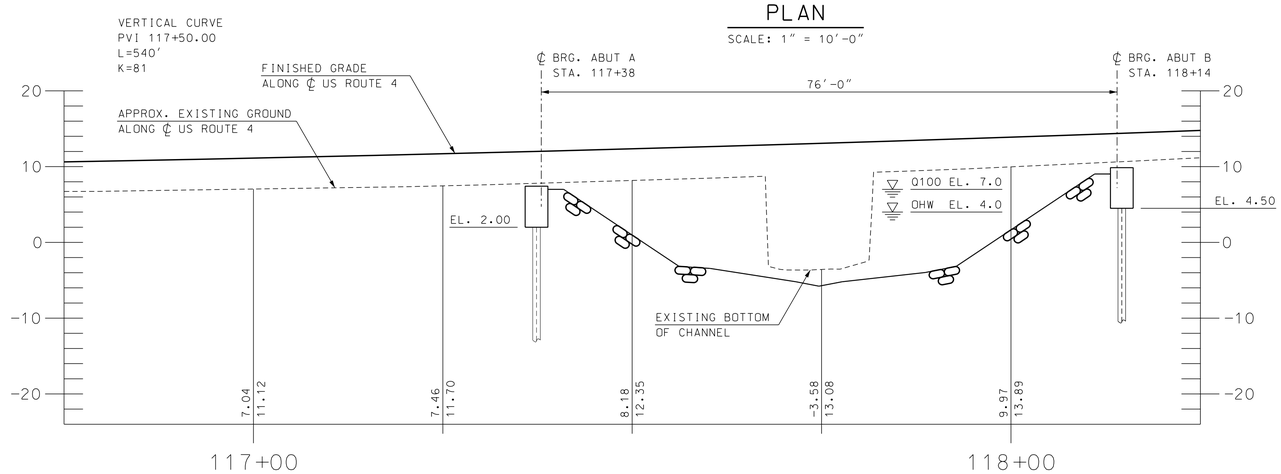

PROFILE - US ROUTE 4

SCALE: 1" = 10'-0"

PRELIMINARY PLANS
SUBJECT TO CHANGE
DATE 1/29/2018

GM2 ASSOCIATES

SUBDIRECTORY	.DGN LOCATOR	SHEET SCALE
Prelim	16236_SitePlan	AS NOTED

STATE OF NEW HAMPSHIRE
DEPARTMENT OF TRANSPORTATION * BUREAU OF BRIDGE DESIGN

TOWN DURHAM BRIDGE NO. 145\116 STATE PROJECT 16236

LOCATION US ROUTE 4 OVER BUNKER CREEK

SITE PLAN AND PROFILE

REVISIONS AFTER PROPOSAL		BY	DATE		BY	DATE
	DESIGNED	BAW	9/17	CHECKED	TPL	9/17
	DRAWN	BAW	9/17	CHECKED	TPL	9/17
	QUANTITIES	BAW	9/17	CHECKED	TPL	9/17

ISSUE DATE	FEDERAL PROJECT NO.	SHEET NO.	TOTAL SHEETS
REV. DATE	X-A001(202)	17	18

BRIDGE SHEET 2 OF

FILE NUMBER -

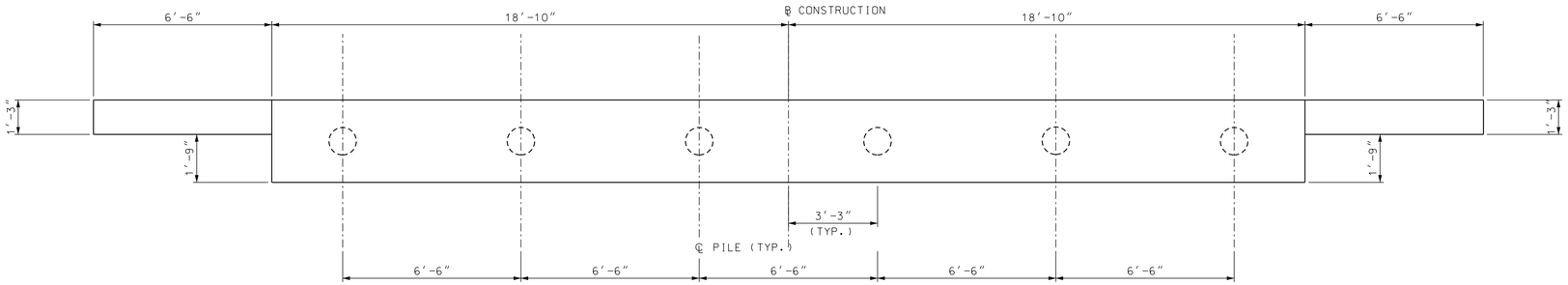

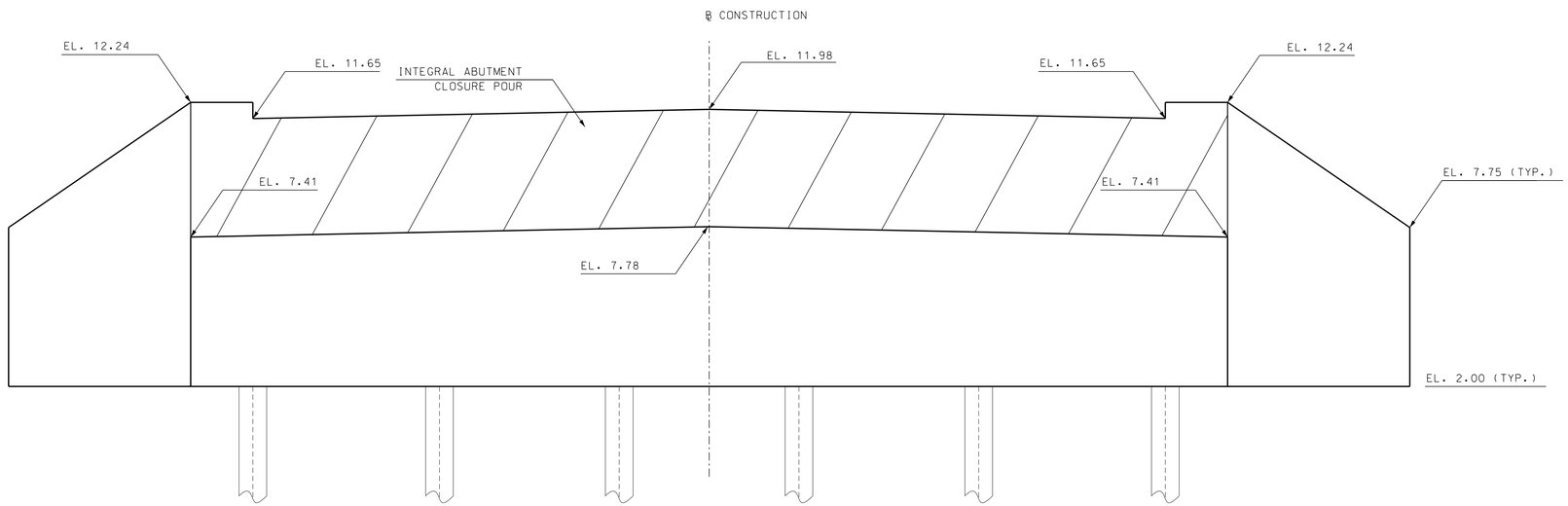

ABUTMENT A ELEVATION

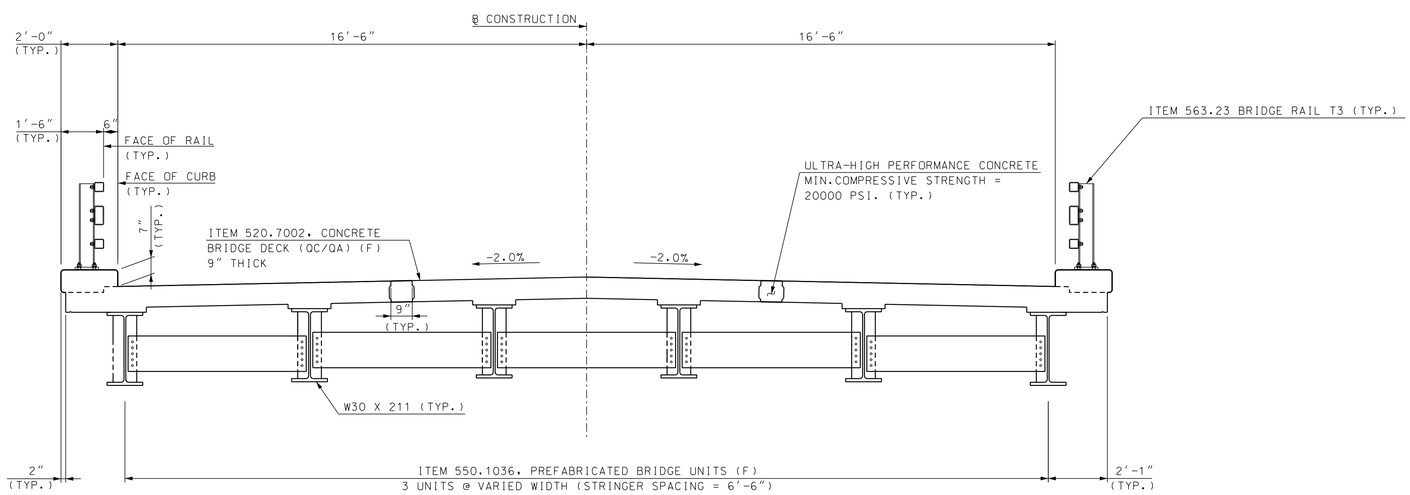

TYPICAL BRIDGE SECTION

PRELIMINARY PLANS
SUBJECT TO CHANGE
DATE 1/29/2018

STATE OF NEW HAMPSHIRE
DEPARTMENT OF TRANSPORTATION * BUREAU OF BRIDGE DESIGN

TOWN DURHAM | BRIDGE NO. 145\116 | STATE PROJECT 16236

LOCATION US ROUTE 4 OVER BUNKER CREEK

ABUTMENT A AND TYPICAL BRIDGE SECTION

BRIDGE SHEET 16 OF

FILE NUMBER -

REVISIONS AFTER PROPOSAL		BY	DATE		BY	DATE
	DESIGNED	TPL	07/17	CHECKED	BAW	07/17
	DRAWN	TEM	09/17	CHECKED	TPL	10/17
	QUANTITIES	---	XX/XX	CHECKED	---	XX/XX

GM2 ASSOCIATES

SUBDIRECTORY	.DGN LOCATOR	SHEET SCALE
Prelim	Durham_16236_Abutment_AB	3/8" = 1'

ISSUE DATE		FEDERAL PROJECT NO.	SHEET NO.	TOTAL SHEETS
REV. DATE		----------	18	18