Bedford-Manchester 40731

Ward 8/ Ward 9 Meeting

Bridge Preservation of I-293 and NH 101 bridges over Merrimack River

May 10, 2018

New Hampshire DOT Department of Transportation

Introductions

- Jason Tremblay, PE
  - NHDOT Bureau of Bridge Design
    - Senior Project Engineer
- Joseph Johnson, PE, PTOE
  - Greenman-Pedersen, Inc.
    - Project Consultant

Bedford-Manchester 40731

Bridge Preservation of I-293 and NH 101 bridges over Merrimack River

New Hampshire DOT Department of Transportation

Project Purpose

- Bridge Maintenance and Preservation
  - Extends the useful life of the bridges
  - Remove EB bridge from State's Red List
    - Piers are in poor condition

Project Need

- Leaking Expansion Joints

New Hampshire DOT Department of Transportation

Project Need

- Deteriorated Bridge Piers

Project Need

- Cracked Pavement and Joints

Project Scope

- Replace bridge expansion joints
- Repair bridge piers
- Replace pavement and membrane
- Patch deck

Bedford-Manchester 40731

Bridge Cross Section

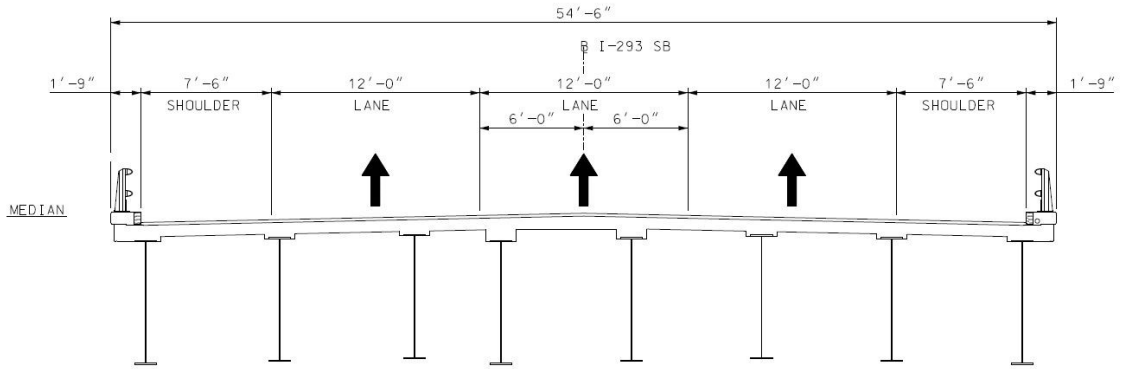

EXISTING CROSS SECTION

(SOUTHBOUND BRIDGE - LOOKING EAST)

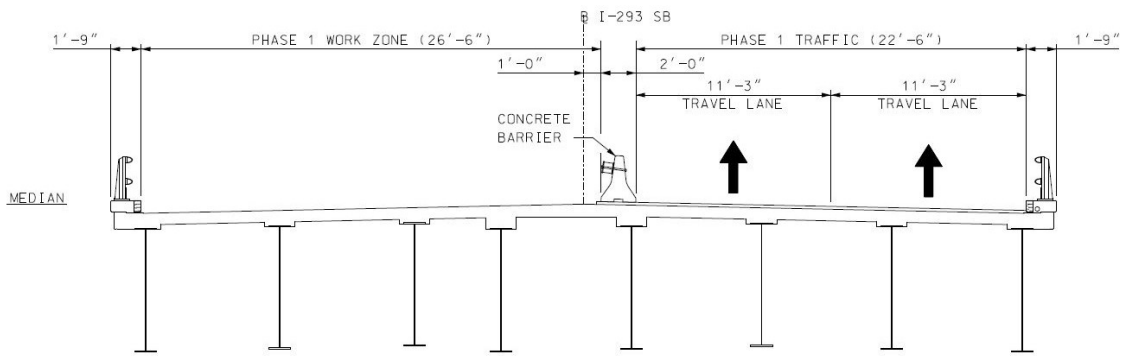

PHASE 1 CONSTRUCTION

(SOUTHBOUND BRIDGE - LOOKING EAST)

Bridge Preservation of I-293 and NH 101 bridges over Merrimack River

New Hampshire DOT Department of Transportation

Bedford-Manchester 40731

Bridge Cross Section

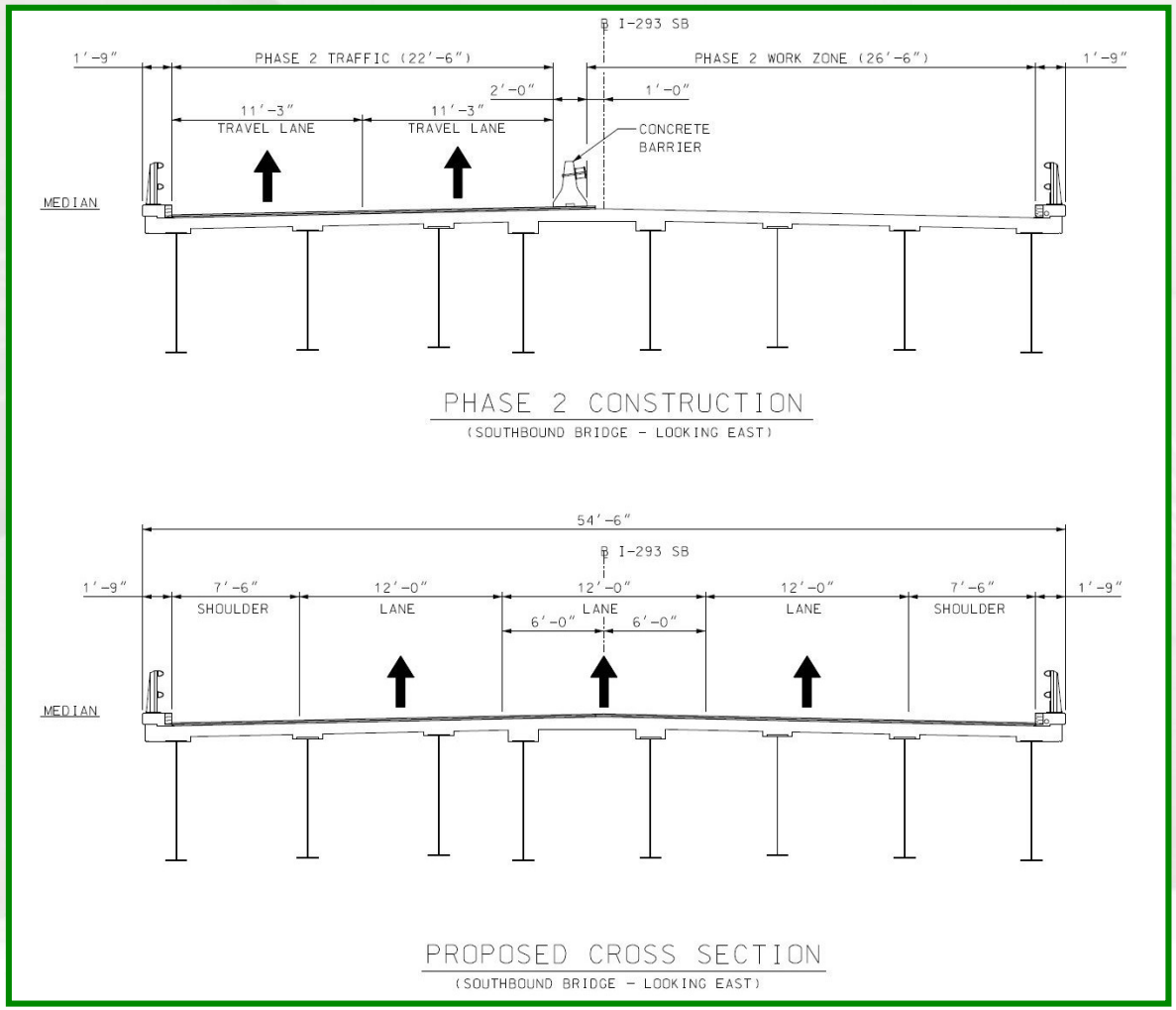

Bridge Preservation of I-293 and NH 101 bridges over Merrimack River

New Hampshire DOT Department of Transportation

Bedford-Manchester 40731

Typical Work Zone

Bridge Preservation of I-293 and NH 101 bridges over Merrimack River

New Hampshire DOT Department of Transportation

Bedford-Manchester 40731

West Side Ramps

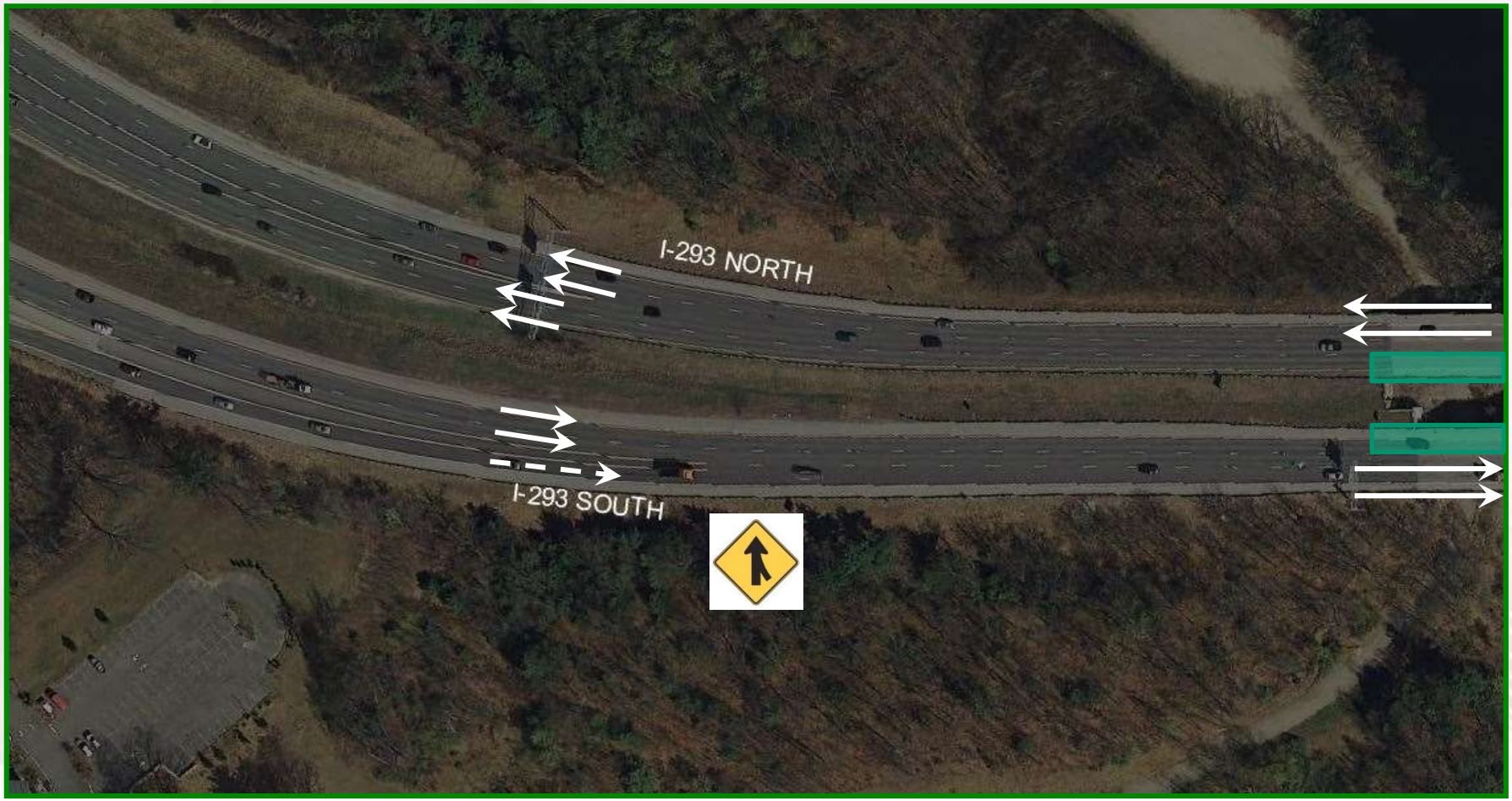

Bridge Preservation of I-293 and NH 101 bridges over Merrimack River

New Hampshire DOT Department of Transportation

Bedford-Manchester 40731

Brown Avenue Ramps

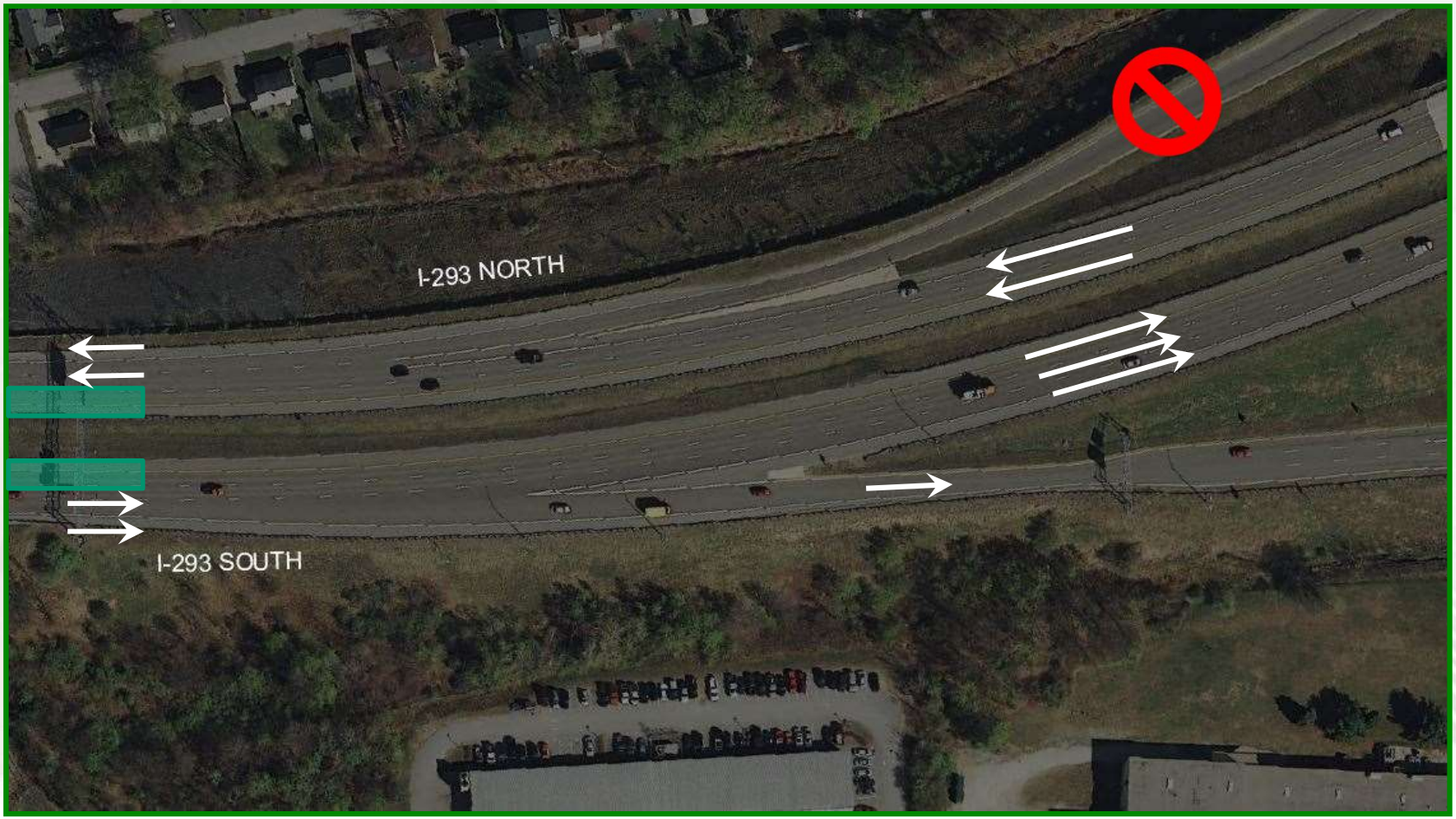

Bridge Preservation of I-293 and NH 101 bridges over Merrimack River

New Hampshire DOT Department of Transportation

Bedford-Manchester 40731

Brown Ave Detour

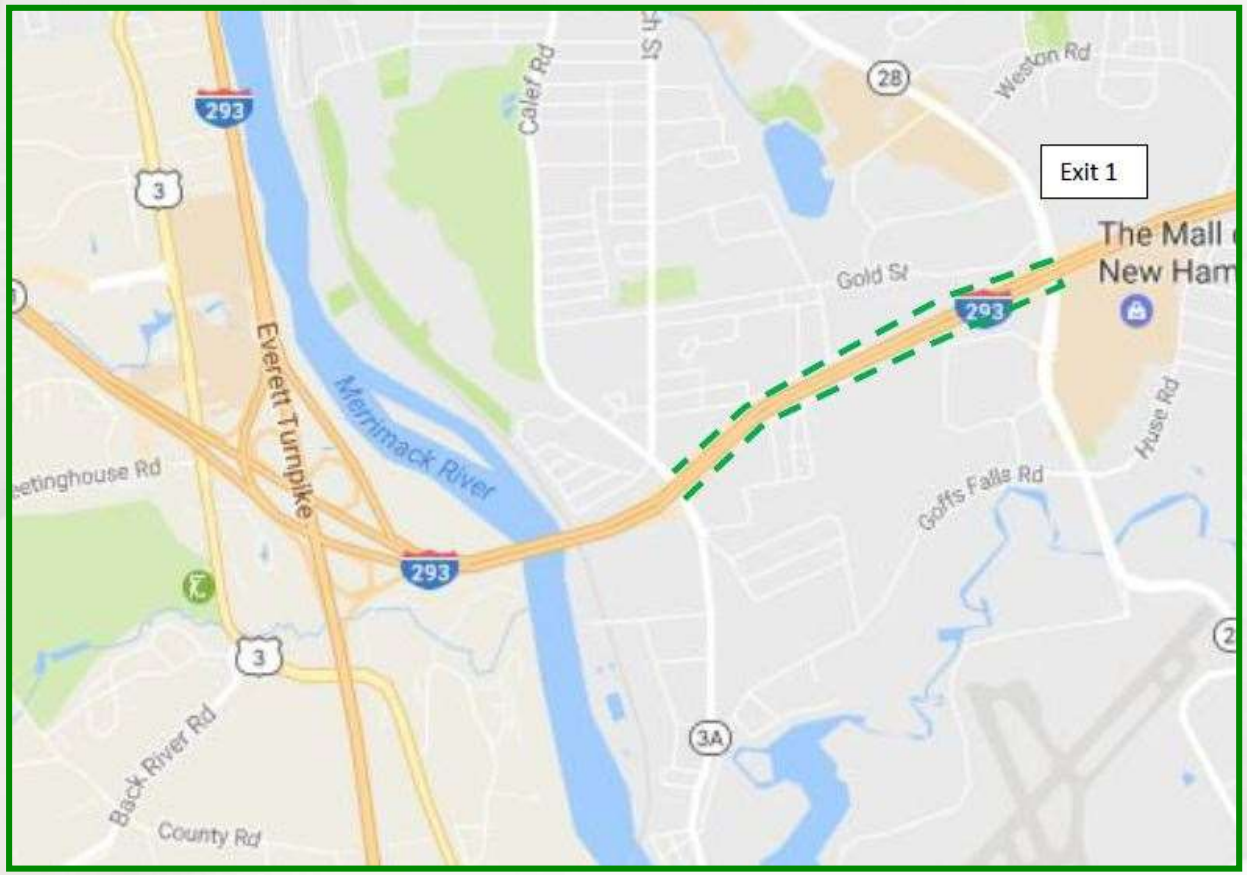

Bridge Preservation of I-293 and NH 101 bridges over Merrimack River

New Hampshire DOT Department of Transportation

Bedford-Manchester 40731

Brown Ave Detour

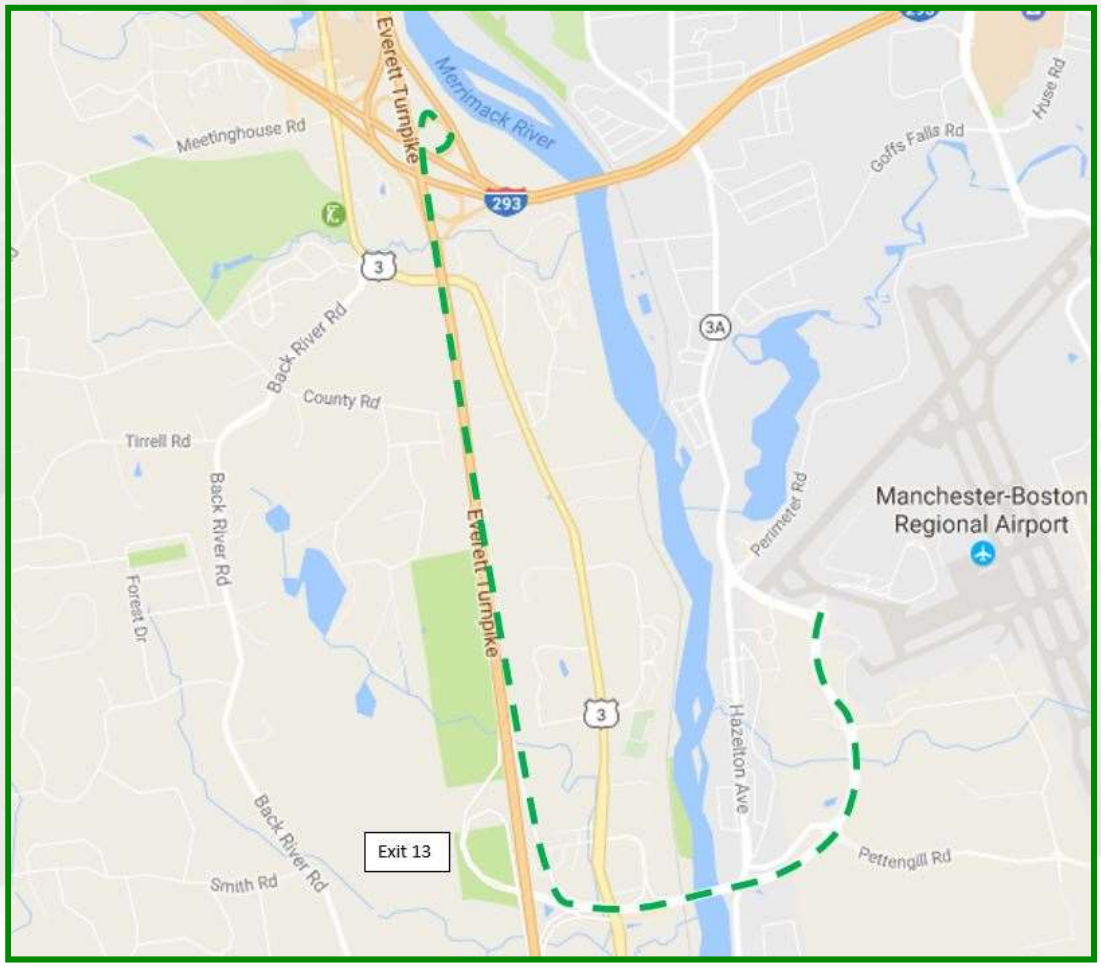

Bridge Preservation of I-293 and NH 101 bridges over Merrimack River

New Hampshire DOT Department of Transportation

Traffic Mitigation Efforts

- Smart Work Zone technology
  - Traffic monitoring and delay information
- Advanced signing and message boards
- Local user knowledge
  - Alternative routing
  - Waze, Google Maps, etc.
- Field adjustment of timings at Exit 1

Traffic Mitigation Efforts

Bridge Preservation of I-293 and NH 101 bridges over Merrimack River

New Hampshire DOT Department of Transportation

Traffic Mitigation Efforts

Bridge Preservation of I-293 and NH 101 bridges over Merrimack River

New Hampshire DOT Department of Transportation

Traffic Mitigation Efforts

Bridge Preservation of I-293 and NH 101 bridges over Merrimack River

New Hampshire DOT Department of Transportation

Traffic Mitigation Efforts

Bridge Preservation of I-293 and NH 101 bridges over Merrimack River

New Hampshire DOT Department of Transportation

Anticipated Project Schedule

- Advertise for bids – June 2018
- Mid-April 2019 to June 2019
  - Traffic shifted right on both bridges
  - 2 to 2.5 month duration for both bridges
- July 2019 to Mid-September 2019
  - Traffic shifted left on both bridges
  - 2 to 2.5 month duration for both bridges
- Completion – Mid-October 2019
  - Final paving and striping

Bedford-Manchester 40731

Bridge Preservation of I-293 and NH 101 bridges over Merrimack River

New Hampshire DOT Department of Transportation