# TRAFFIC SIGNAL MAST ARM FOUNDATION - TYPE 1A

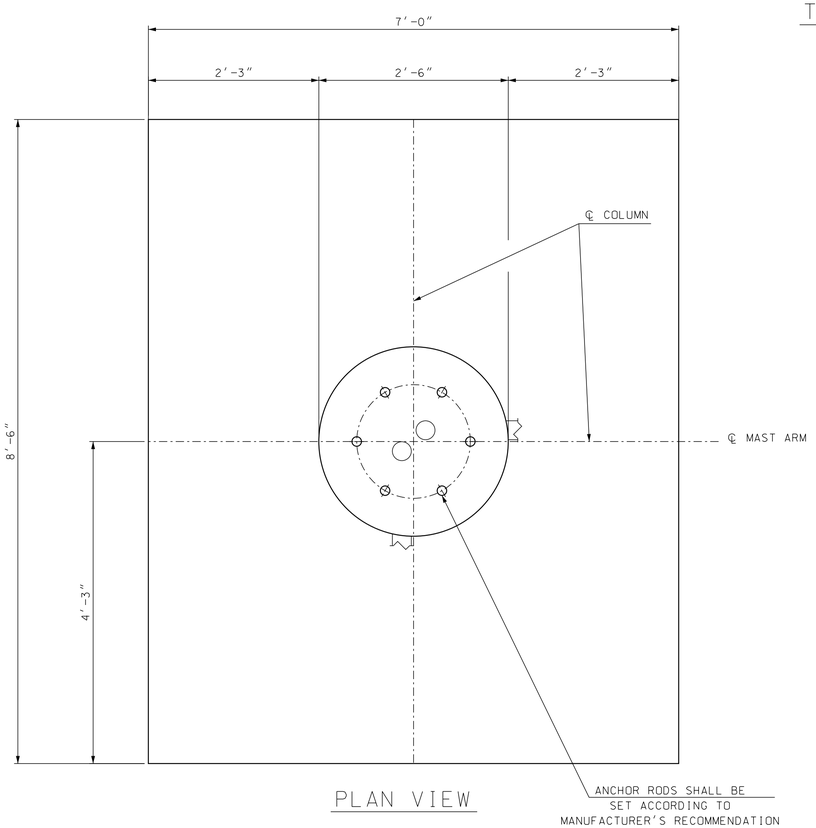


PLAN VIEW

| REQUIRED FOUNDATION DIMENSIONS | | | |
|---|---|---|---|
| STEM DIAMETER AND LENGTH | FOOTING DIMENSIONS | CASE 1 WITH LUMINAIRE | CASE 2 WITHOUT LUMINAIRE |
| | | ** 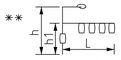 MAX h = 40'-0" MAX h1 = 20'-0" | ** 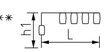 MAX h1 = 20'-0" |
| TYPE 1A (2'-6"Φx4'-4") | TYPE 1A (8'-6"x7'x2') | MAX L = 25'-0" | MAX L = 25'-0" |
| TYPE 1B (3'-0"Φx4'-10") | TYPE 1B (8'x7'x2') | - | MAX L = 40'-0" |
| TYPE 1C (3'-0"Φx4'-10") | TYPE 1C (9'x7'x2') | MAX L = 45'-0" | MAX L = 45'-0" |
| TYPE 1D (3'-0"Φx4'-10") | TYPE 1D (9'x8'-6"x2') | MAX L = 55'-0" | MAX L = 55'-0" |
| TYPE 1E (3'-0"Φx5'-4") | TYPE 1E (9'x9'x2') | MAX L = 60'-0" | MAX L = 60'-0" |

** NOTE: SEE TRAFFIC SIGNAL MAST ARM LAYOUT SPECIAL DETAIL FOR ATTACHMENT LAYOUTS. ATTACHMENT COMBINATIONS OTHER THAN THOSE SHOWN ON THE SPECIAL DETAIL SHALL NOT BE USED WITHOUT DESIGN APPROVAL FROM EITHER THE BUREAU OF BRIDGE DESIGN OR THE BUREAU OF TRAFFIC.

| TYPICAL QUANTITIES PER BASE | | |
|---|---|---|
| ITEM NUMBER | ITEM | QUANTITY |
| 206.1* | COMMON STRUCTURE EXCAVATION | 21 CY |
| 209.1* | GRANULAR BACKFILL | 16.1 CY |
| 520.21* | CONCRETE CLASS B, FOOTINGS | 5.2 CY |
| 544* | REINFORCING STEEL | 366 LB |

* ITEM NUMBERS ARE FOR SPECIFICATION REFERENCE ONLY. NO SEPARATE PAYMENT WILL BE MADE FOR THESE ITEMS.

## GENERAL NOTES (TYPE 1 FOUNDATION)

1. THERE SHALL BE A MINIMUM OF ONE TEST BORING REQUIRED, AT THE APPROXIMATE FOUNDATION LOCATION, TO CONFIRM THE ENGINEERING PROPERTIES OF THE SOILS PROVIDING FOUNDATION SUPPORT. THE ENGINEER MAY REQUIRE ADDITIONAL BORINGS IF CONSIDERED NECESSARY.
2. ALL REINFORCING STEEL SHALL CONFORM TO AASHTO M31/M31M, GRADE 60 (420). ALL REINFORCING STEEL SHALL BE A MINIMUM OF 3 INCHES FROM CONCRETE SURFACES, UNLESS NOTED OTHERWISE, AND SHALL MEET THE REQUIREMENTS OF SECTION 544.
3. CONCRETE SHALL BE CLASS B HAVING A MINIMUM 28 DAY COMPRESSIVE STRENGTH OF 3000 PSI PLACED IN CONFORMANCE WITH SECTION 520. CYLINDERS FOR STRENGTH TESTING SHALL BE TAKEN DURING CONCRETE PLACEMENT.
4. BEARING CAPACITY IS BASED ON THE ALLOWABLE STRESS DESIGN. THE ALLOWABLE BEARING CAPACITY SHALL BE A MINIMUM OF $1\frac{1}{2}$ TONS/SF AFTER THE APPLICATION OF A FACTOR OF SAFETY OF 3 TO THE ULTIMATE BEARING CAPACITY.
5. FOOTING CONCRETE SHALL BE PLACED ON UNDISTURBED MATERIAL. UNSUITABLE MATERIAL FOUND AT THE BOTTOM OF FOOTING GRADE SHALL BE REMOVED AND REPLACED WITH STRUCTURAL FILL, ITEM 508, AS DIRECTED BY THE ENGINEER. STRUCTURAL FILL USED IN EXCESS OF THE AMOUNT SPECIFIED ON THE PROJECT PLANS OR UNDER ITEM 616.1XX WILL BE PAID AS EXTRA WORK IN ACCORDANCE WITH 109.04.
6. STAINLESS STEEL STD. GR. WIRE CLOTH. $\frac{1}{4}$" MAX. OPENING WITH MIN. WIRE DIA. OF AWG NO. 16 WITH 2" LAP. SECURE WITH $\frac{3}{4}$" STAINLESS STEEL BANDING AFTER ANCHOR RODS ARE FULLY TIGHTENED.
7. NO GROUT SHALL BE PLACED BETWEEN THE FOUNDATION AND BOTTOM OF THE BASE PLATE.
8. THE EXPOSED LENGTH OF THE ANCHOR ROD BETWEEN THE TOP OF THE FOUNDATION AND THE BOTTOM OF THE LEVELING NUT SHOULD NOT EXCEED ONE ROD DIAMETER (MAXIMUM) OR 1-INCH (PREFERRED).
9. FOR THE INSTALLATION, PRETENSIONING AND ULTRASONIC TESTING OF ANCHOR RODS, SEE THE SPECIAL PROVISION AMENDMENT TO SECTION 616, TRAFFIC SIGNALS.
10. ANCHOR RODS SHALL BE STRAIGHT RODS AND CONFORM TO ASTM F1554 GRADE 50 (MIN.). GALVANIZE THE ENITRE ROD PER ASTM A153. EACH ANCHOR ROD SHALL BE SUPPLIED WITH A MINIMUM OF THREE HEX NUTS (ASTM A563 OR ASTM A194) AND A MINIMUM OF TWO FLAT HARDENED WASHERS (ASTM F436). LOCK WASHERS SHALL NOT BE USED. THE EMBEDDED END OF THE ANCHOR ROD SHALL HAVE EITHER ONE NUT TACKED WELDED OR DOUBLE NUTS. BENT (HOOKED OR J-BOLT) ANCHOR RODS SHALL NOT BE USED.
11. EXCAVATION AND BACKFILL QUANTITIES ARE BASED ON AN EXCAVATED AREA ONE FOOT CLEAR OF THE FOUNDATION SIDES AND TO THE BOTTOM OF THE FOOTING.
12. WHERE BEDROCK IS ENCOUNTERED, EXCAVATION SHALL STILL EXTEND TO LIMITS SHOWN.
13. TYPE 1 FOUNDATIONS SHALL BE PAID FOR UNDER ITEM 616.1XX.
14. SEE THE TYPE 1B & TYPE 1C FOOTING SPECIAL DETAIL.
15. SEE THE TYPE 1D & TYPE 1E FOOTING SPECIAL DETAIL.

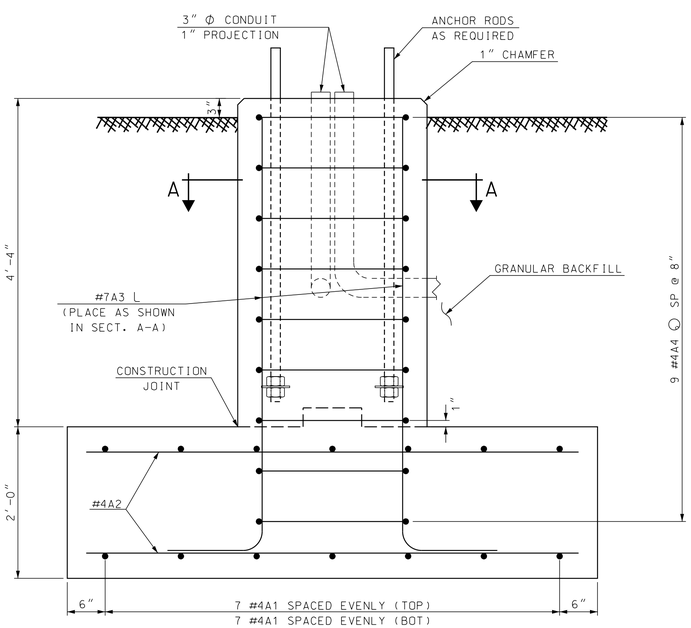


ELEVATION VIEW

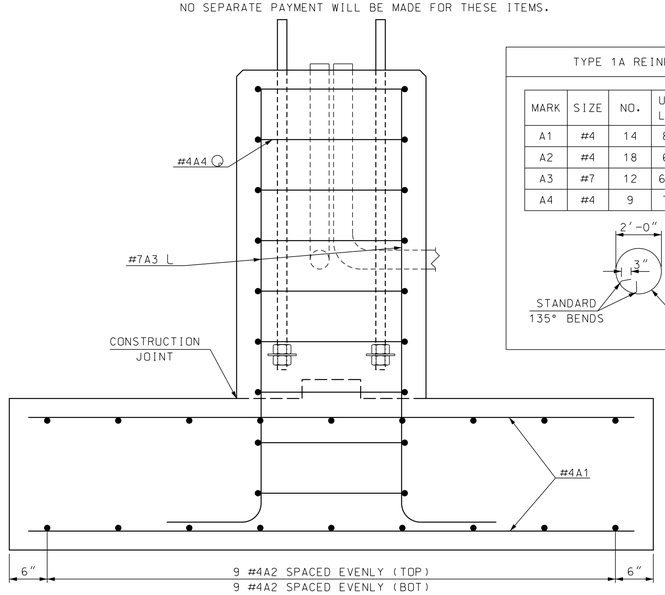


END ELEVATION VIEW

TYPE 1A REINFORCING SCHEDULE

| MARK | SIZE | NO. | UNBENT LENGTH | TYPE |
|---|---|---|---|---|
| A1 | #4 | 14 | 8'-0" | —— |
| A2 | #4 | 18 | 6'-6" | —— |
| A3 | #7 | 12 | 6'-10" | L |
| A4 | #4 | 9 | 7'-7" | Q |

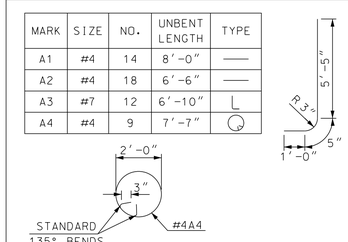


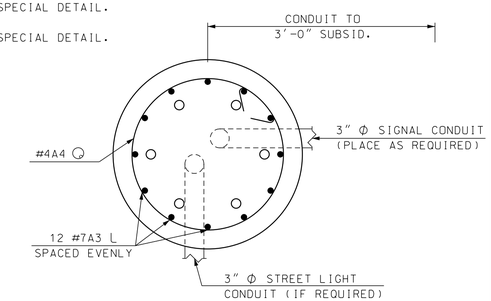


SECTION A-A

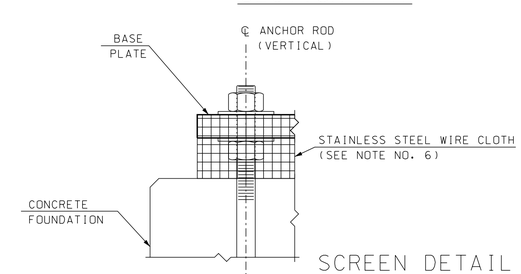


SCREEN DETAIL

TRAFFIC SIGNAL STANDARD

*Traffic Signal Mast Arm Foundation - Type 1A*

STANDARD NO. TS-1

| REVISION DATE |
|---|
| 07-13-01 |
| 02-26-10 |
| 10-09-17 |
| |
| |
| |

| *.DGN FILE NAME |
|---|
| TS-1 |

STANDARD PLAN

New Hampshire DOT Department of Transportation

STANDARD NO. TS-1