STANDARD NO. SG-5

REVISION DATE
7-13-01

*.DGN FILE NAME
SG-5

METRIC STANDARD PLANS

STATE OF NEW HAMPSHIRE
DEPARTMENT OF TRANSPORTATION, CONCORD, N.H.

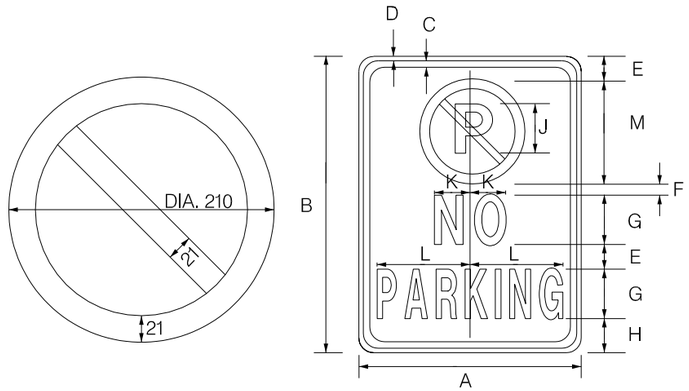

R7-2B1

	DIMENSIONS (mm)											
SIGN	A	B	C	D	E	F	G	H	J	K	L	M
STD.	450	600	13	13	50	22	100C	69	127C	72	188	213

COLORS
LEGEND /BORDER – RED/BLACK
BACKGROUND – WHITE
'P' – BLACK

ALL DIMENSIONS SHOWN ARE IN MILLIMETERS OR METERS. WHOLE NUMBERS INDICATE MILLIMETERS; DECIMAL NUMBERS INDICATE METERS UNLESS OTHERWISE NOTED.

REGULATORY SIGN
NHDOT STANDARD PLANS
NO PARKING

REV. DATE

PLATE 1
STANDARD SG-5

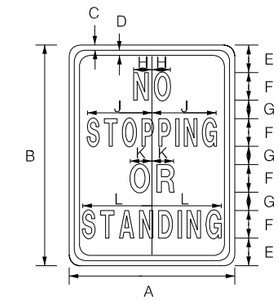

R7-4B1

	DIMENSIONS (mm)										
SIGN	A	B	C	D	E	F	G	H	J	K	L
STD.	450	600	13	13	75	75C	50	50	175	59	188

COLORS
LEGEND /BORDER – BLACK
BACKGROUND – WHITE

ALL DIMENSIONS SHOWN ARE IN MILLIMETERS OR METERS. WHOLE NUMBERS INDICATE MILLIMETERS; DECIMAL NUMBERS INDICATE METERS UNLESS OTHERWISE NOTED.

REGULATORY SIGN
NHDOT STANDARD PLANS
NO STOPPING OR STANDING

REV. DATE

PLATE 2
STANDARD SG-5

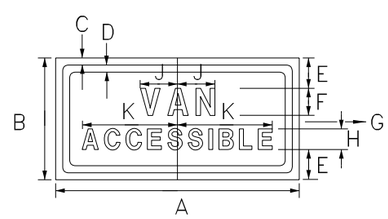

R7-8a

	DIMENSIONS (mm)									
SIGN	A	B	C	D	E	F	G	H	J	K
STD.	450	225	13	13	56	50D	25	38D	69	175

COLORS
LEGEND /BORDER – GREEN /BLACK
BACKGROUND – WHITE /WHITE

ALL DIMENSIONS SHOWN ARE IN MILLIMETERS OR METERS. WHOLE NUMBERS INDICATE MILLIMETERS; DECIMAL NUMBERS INDICATE METERS UNLESS OTHERWISE NOTED.

REGULATORY SIGN
NHDOT STANDARD PLANS
VAN ACCESSIBLE

REV. DATE

PLATE 3
STANDARD SG-5

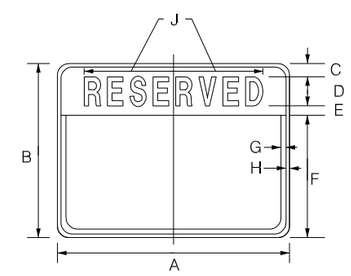

R7-8aB1

	DIMENSIONS (mm)								
SIGN	A	B	C	D	E	F	G	H	J
STD.	600	450	34	75D	25	316	13	9	231

COLORS
LEGEND /BORDER – BLACK
BACKGROUND – WHITE

ALL DIMENSIONS SHOWN ARE IN MILLIMETERS OR METERS. WHOLE NUMBERS INDICATE MILLIMETERS; DECIMAL NUMBERS INDICATE METERS UNLESS OTHERWISE NOTED.

REGULATORY SIGN
NHDOT STANDARD PLANS
RESERVED

REV. DATE

PLATE 4
STANDARD SG-5

STANDARD NO. SG-5

REVISION DATE
7-13-01

*.DGN FILE NAME
SG-5

METRIC STANDARD PLANS

STATE OF NEW HAMPSHIRE
DEPARTMENT OF TRANSPORTATION, CONCORD, N.H.

STANDARD NO. SG-5