STANDARD NO. SG-2

REVISION DATE
7-13-01

*.DGN FILE NAME
SG-2

METRIC STANDARD PLANS

STATE OF NEW HAMPSHIRE
DEPARTMENT OF TRANSPORTATION, CONCORD, N.H.

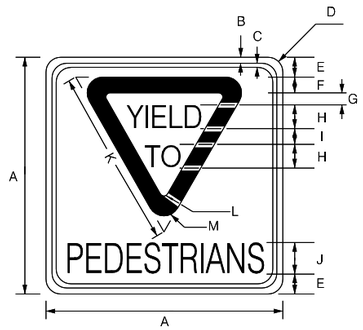

R1-2B1

	DIMENSIONS (mm)												
SIGN	A	B	C	D	E	F	G	H	I	J	K	L	M
STD.	750	13	13	47	63	50	38	75D	50	100B	563	13	50

COLORS
BACKGROUND – WHITE REFLECTIVE
TRIANGLE & 'YIELD TO' – RED REFLECTIVE
BORDER & 'PEDESTRIANS' – BLACK NON-REFLECTIVE

ALL DIMENSIONS SHOWN ARE IN MILLIMETERS OR METERS. WHOLE NUMBERS INDICATE MILLIMETERS; DECIMAL NUMBERS INDICATE METERS UNLESS OTHERWISE NOTED.

REGULATORY SIGN
NHDOT STANDARD PLANS
YIELD TO PEDESTRAINS

REV. DATE

PLATE 1
STANDARD SG-2

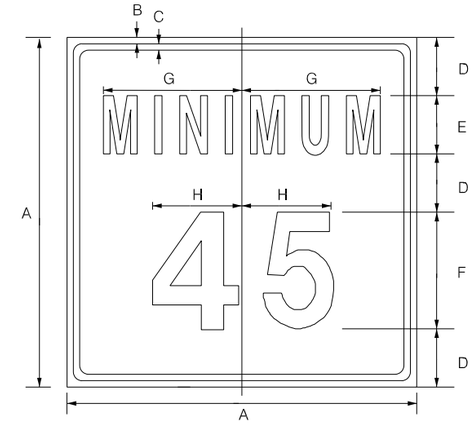

R2-4B1

	DIMENSIONS (mm)							
SIGN	A	B	C	D	E	F	G	H
STD.	1200	19	22	200	200C	400D	475	306

COLORS
LEGEND /BORDER – BLACK
BACKGROUND – WHITE

ALL DIMENSIONS SHOWN ARE IN MILLIMETERS OR METERS. WHOLE NUMBERS INDICATE MILLIMETERS; DECIMAL NUMBERS INDICATE METERS UNLESS OTHERWISE NOTED.

REGULATORY SIGN
NHDOT STANDARD PLANS
MINIMUM 45

REV. DATE

PLATE 2
STANDARD SG-2

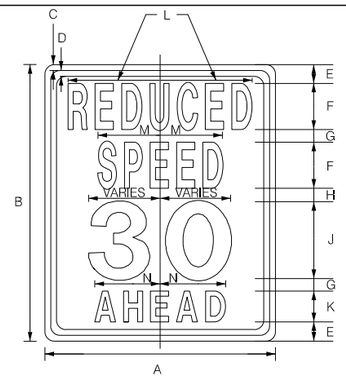

R2-5B1

	DIMENSIONS (mm)												
SIGN	A	B	C	D	E	F	G	H	J	K	L	M	N
STD.	750	900	13	19	63	150	41	44	250E	100	300	203	213
FWY.	900	1200	19	19	75	175B	88	81	300E	150C	372	256	275
SPECIAL	1200	1500	19	22	150	200C	100	103	350E	150D	500	350	319

COLORS
LEGEND /BORDER – BLACK
BACKGROUND – WHITE

ALL DIMENSIONS SHOWN ARE IN MILLIMETERS OR METERS. WHOLE NUMBERS INDICATE MILLIMETERS; DECIMAL NUMBERS INDICATE METERS UNLESS OTHERWISE NOTED.

REGULATORY SIGN
NHDOT STANDARD PLANS
REDUCED SPEED 30 AHEAD

REV. DATE

PLATE 3
STANDARD SG-2

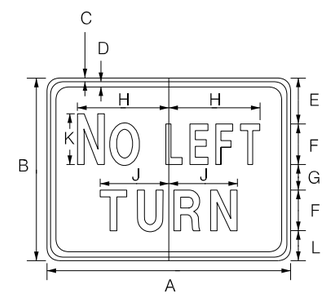

R3-3LB1

	DIMENSIONS (mm)										
SIGN	A	B	C	D	E	F	G	H	J	K	L
STD.	600	450	13	13	113	100C	63	225	169	125C	75

COLORS
LEGEND /BORDER – BLACK
BACKGROUND – WHITE

ALL DIMENSIONS SHOWN ARE IN MILLIMETERS OR METERS. WHOLE NUMBERS INDICATE MILLIMETERS; DECIMAL NUMBERS INDICATE METERS UNLESS OTHERWISE NOTED.

REGULATORY SIGN
NHDOT STANDARD PLANS
NO LEFT TURN

REV. DATE

PLATE 4
STANDARD SG-2

STANDARD NO. SG-2

REVISION DATE
7-13-01

*.DGN FILE NAME
SG-2

METRIC STANDARD PLANS

STATE OF NEW HAMPSHIRE
DEPARTMENT OF TRANSPORTATION, CONCORD, N.H.

STANDARD NO. SG-2