STANDARD NO. SG-10

REVISION DATE
7-13-01

*.DGN FILE NAME
SG-10

METRIC STANDARD PLANS

STATE OF NEW HAMPSHIRE
DEPARTMENT OF TRANSPORTATION, CONCORD, N.H.

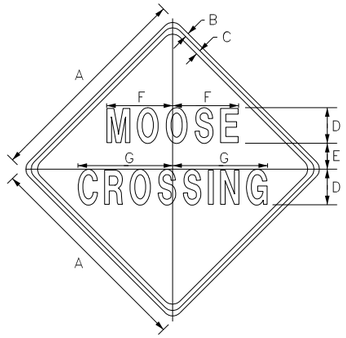

W11B-5

	DIMENSIONS (mm)						
SIGN	A	B	C	D	E	F	G
STD.	900	19	19	150D	109	278	400
FWY.	1200	22	22	200D	125	712	1063

COLORS
LEGEND /BORDER – BLACK
BACKGROUND – YELLOW

ALL DIMENSIONS SHOWN ARE IN MILLIMETERS OR METERS. WHOLE NUMBERS INDICATE MILLIMETERS; DECIMAL NUMBERS INDICATE METERS UNLESS OTHERWISE NOTED.

WARNING SIGN
NHDOT STANDARD PLANS
MOOSE CROSSING

REV. DATE

PLATE 1
STANDARD SG-10

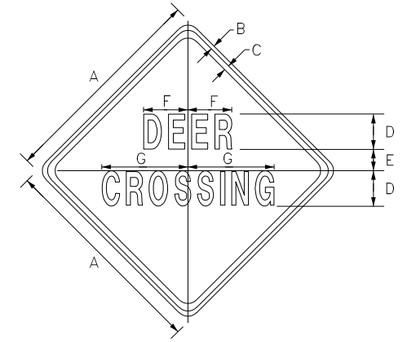

W11B-6

	DIMENSIONS (mm)						
SIGN	A	B	C	D	E	F	G
STD.	750	13	19	125C	75	158	303
FWY.	900	19	19	150C	109	200	400

COLORS
LEGEND /BORDER – BLACK
BACKGROUND – YELLOW

ALL DIMENSIONS SHOWN ARE IN MILLIMETERS OR METERS. WHOLE NUMBERS INDICATE MILLIMETERS; DECIMAL NUMBERS INDICATE METERS UNLESS OTHERWISE NOTED.

WARNING SIGN
NHDOT STANDARD PLANS
DEER CROSSING

REV. DATE

PLATE 2
STANDARD SG-10

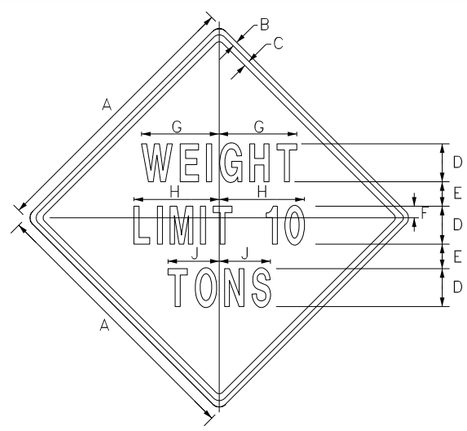

W12B-1

	DIMENSIONS (mm)								
SIGN	A	B	C	D	E	F	G	H	J
STD.	900	19	19	125C	81	260	256	281	169

COLORS
LEGEND /BORDER – BLACK
BACKGROUND – YELLOW

ALL DIMENSIONS SHOWN ARE IN MILLIMETERS OR METERS. WHOLE NUMBERS INDICATE MILLIMETERS; DECIMAL NUMBERS INDICATE METERS UNLESS OTHERWISE NOTED.

WARNING SIGN
NHDOT STANDARD PLANS
WEIGHT LIMIT 10 TONS

REV. DATE

PLATE 3
STANDARD SG-10

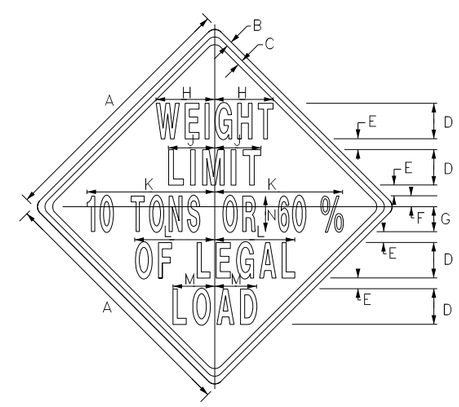

W12B-2

	DIMENSIONS (mm)												
SIGN	A	B	C	D	E	F	G	H	J	K	L	M	N
STD.	900	19	19	125B	38	38	88	206	163	450	281	147	100B

COLORS
LEGEND /BORDER – BLACK
BACKGROUND – YELLOW

ALL DIMENSIONS SHOWN ARE IN MILLIMETERS OR METERS. WHOLE NUMBERS INDICATE MILLIMETERS; DECIMAL NUMBERS INDICATE METERS UNLESS OTHERWISE NOTED.

WARNING SIGN
NHDOT STANDARD PLANS
WEIGHT LIMIT 10 TONS OR 60% OF LEGAL LOAD

REV. DATE

PLATE 4
STANDARD SG-10

STANDARD NO. SG-10

REVISION DATE
7-13-01

*.DGN FILE NAME
SG-10

METRIC STANDARD PLANS

STATE OF NEW HAMPSHIRE
DEPARTMENT OF TRANSPORTATION, CONCORD, N.H.

STANDARD NO. SG-10