STANDARD NO. HW-2

REVISION DATE
7-13-01

*.DGN FILE NAME
HW-2

METRIC STANDARD PLANS

STATE OF NEW HAMPSHIRE
DEPARTMENT OF TRANSPORTATION, CONCORD, N.H.

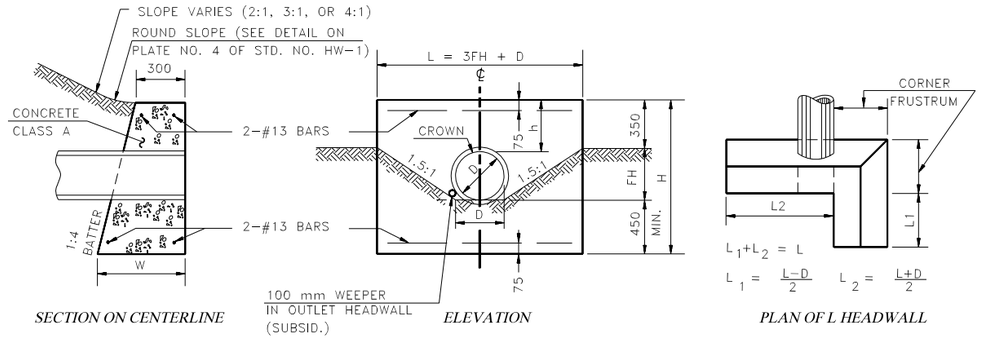

SECTION ON CENTERLINE *ELEVATION* *PLAN OF L HEADWALL*

SECTIONS ON CENTERLINE FOR PC-4 SIMILAR TO PC-2.

DIAMETER D (mm)	MASONRY PER 100 mm OF WALL m3	MASONRY PER STANDARD HEADER m3	STEEL PER STANDARD HEADER kg	LENGTH OF BARS mm	HEADER EXC. PER HEADER 100 mm DEPTH m3	HEADER LENGTH L mm	HEADER HEIGHT H mm	FILL HEIGHT FH mm	"h" mm	WIDTH AT BOTTOM OF HEADER W mm	"L" HEADWALL MASONRY IN CORNER FRUSTRUM m3	"L" HEADWALL HEADER EXC. PER HEADER 100 mm DEPTH m3
300	0.051	0.61	5	1150	0.229	1275	1125	325	375	580	0.24	0.300
375	0.060	1.01	7	1700	0.302	1800	1275	475	450	620	0.29	0.398
450	0.065	1.27	7	1700	0.345	2100	1350	550	450	640	0.32	0.426
600	0.076	1.84	11	2600	0.434	2700	1500	700	450	675	0.39	0.523
750	0.086	2.54	13	3200	0.528	3300	1650	850	450	715	0.47	0.625
900	0.098	3.39	16	3800	0.627	3900	1800	1000	450	750	0.55	0.732
1050	0.116	4.80	19	4550	0.773	4725	2025	1225	525	805	0.72	0.890
1200	0.128	5.94	21	5150	0.883	5325	2175	1375	525	845	0.80	1.008
1350	0.142	7.23	24	5750	0.998	5925	2325	1525	525	880	0.92	1.134
1500	0.156	8.73	26	6350	1.117	6525	2475	1675	525	920	1.05	1.260
1650	0.173	10.46	29	6950	1.241	7125	2625	1825	525	955	1.19	1.395
1800	0.186	12.07	31	7550	1.370	7725	2775	1975	525	995	1.34	1.532

NOTE: STEEL QUANTITIES ARE FOR CONCRETE HEADWALLS ONLY

ALL DIMENSIONS SHOWN ARE IN MILLIMETERS OR METERS.
WHOLE NUMBERS INDICATE MILLIMETERS; DECIMAL
NUMBERS INDICATE METERS UNLESS OTHERWISE NOTED.

NHDOT STANDARD PLANS
HEADWALLS FOR R.C. PIPE:
CONCRETE *P.C.-3*
MORTAR RUBBLE MASONRY *P.C.-4*

REV. DATE

PLATE 1
STANDARD HW-2

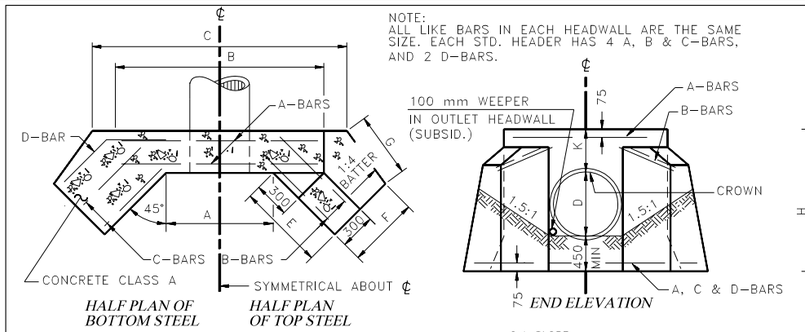

HALF PLAN OF BOTTOM STEEL *HALF PLAN OF TOP STEEL* *END ELEVATION* *SIDE ELEVATION*

2:1 SLOPE

DIAMETER D (mm)	QUANTITIES PER HEADER CONC m3	STEEL kg	EXC. FOR 100 mm DEPTH m3	DIMENSIONS A	B	C	E	F	G	H	I	J	K	REINFORCING STEEL SIZE	LENGTH A BARS	B BARS	C BARS	D BARS	D-BARS a	b
600	1.51	16	0.40	750	1600	1975	900	575	675	1500	1350	1150	450	13	1500	950	900	1400	725	675
750	1.97	19	0.45	925	1775	2250	1075	600	825	1650	1500	1225	450	13	1675	1125	1075	1575	750	825
900	2.48	21	0.53	1100	1950	2525	1250	625	975	1800	1650	1300	450	13	1850	1275	1225	1750	800	950
1050	3.41	57	0.64	1275	2125	2850	1525	650	1200	2025	1875	1450	525	19	2025	1575	1475	2350	1150	1200
1200	4.11	63	0.72	1450	2300	3125	1725	675	1350	2175	2025	1525	525	19	2200	1775	1675	2525	1150	1375
1350	4.94	68	0.79	1625	2475	3375	1900	700	1500	2325	2175	1600	525	19	2375	1975	1825	2750	1225	1525
1500	5.77	73	0.88	1800	2650	3650	2075	725	1650	2475	2325	1700	525	19	2550	2125	2000	2925	1225	1700
1650	6.73	80	0.95	1975	2825	3950	2250	750	1800	2625	2475	1775	525	19	2725	2300	2175	3125	1250	1875
1800	7.87	85	1.03	2150	3000	4200	2450	775	1950	2775	2625	1875	525	19	2900	2475	2350	3300	1275	2025

4:1 SLOPE

DIAMETER D (mm)	CONC m3	STEEL kg	EXC. FOR 100 mm DEPTH m3	A	B	C	E	F	G	H	I	J	K	SIZE	A BARS	B BARS	C BARS	D BARS	a	b
600	1.97	20	0.48	750	1600	2025	1175	625	950	1500	1425	1275	450	13	1500	1275	1200	1650	750	900
750	2.53	22	0.56	925	1775	2300	1400	650	1125	1650	1575	1375	450	13	1675	1500	1400	1875	800	1075
900	3.31	25	0.65	1100	1950	2575	1625	675	1325	1800	1725	1500	450	13	1850	1725	1600	2125	850	1275
1050	4.58	68	0.78	1275	2125	2925	1975	725	1600	2025	1950	1650	525	19	2025	2075	1925	2775	1200	1575
1200	5.57	74	0.87	1450	2300	3175	2200	750	1800	2175	2100	1775	525	19	2200	2300	2125	3025	1250	1775
1350	6.71	81	0.98	1625	2475	3450	2450	775	2025	2325	2250	1875	525	19	2375	2550	2350	3275	1275	2000
1500	7.91	88	1.08	1800	2650	3725	2675	800	2200	2475	2400	1975	525	19	2550	2775	2600	3525	1300	2225
1650	9.25	95	1.18	1975	2825	3975	2900	825	2400	2625	2550	2100	525	19	2725	3000	2825	3800	1375	2425
1800	10.81	101	1.29	2150	3000	4275	3150	850	2600	2775	2700	2200	525	19	2900	3250	2925	4025	1400	2625

ALL DIMENSIONS SHOWN ARE IN MILLIMETERS OR METERS.
WHOLE NUMBERS INDICATE MILLIMETERS; DECIMAL
NUMBERS INDICATE METERS UNLESS OTHERWISE NOTED.

NHDOT STANDARD PLANS
CONCRETE HEADWALLS WITH
45° WINGS FOR R.C. PIPE *P.C.-7*

REV. DATE

PLATE 2
STANDARD HW-2

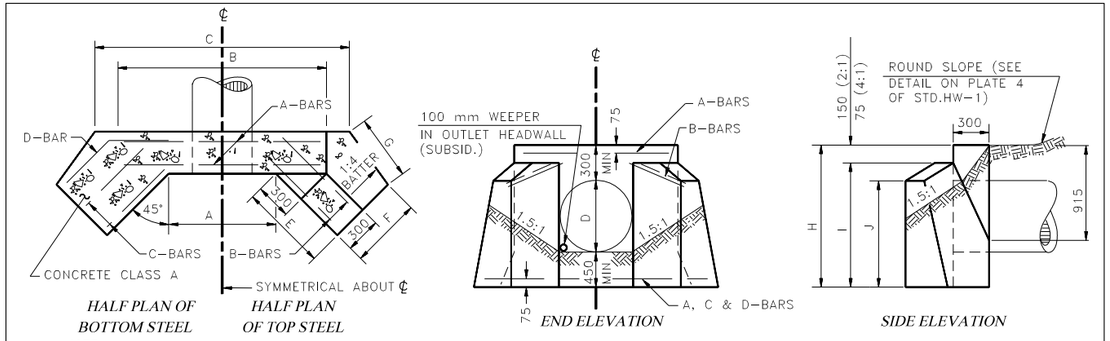

HALF PLAN OF BOTTOM STEEL *HALF PLAN OF TOP STEEL* *END ELEVATION* *SIDE ELEVATION*

NOTE:
ALL LIKE BARS IN EACH HEADWALL ARE THE SAME SIZE. EACH STD. HEADER HAS 4 A, B & C-BARS, AND 2 D-BARS.

2:1 SLOPE

DIAMETER D (mm)	QUANTITIES PER HEADER CONC m3	STEEL kg	EXC. FOR 100 mm DEPTH m3	DIMENSIONS A	B	C	E	F	G	H	I	J	REINFORCING STEEL SIZE	LENGTH A BARS	B BARS	C BARS	D BARS	D-BARS a	b
600	1.15	15	0.34	675	1525	1800	725	575	525	1350	1200	1050	13	1425	775	725	1175	700	475
750	1.54	17	0.41	825	1675	2050	900	575	675	1500	1350	1150	13	1575	975	925	1375	775	600
900	2.00	19	0.47	975	1825	2300	1075	600	825	1650	1500	1225	13	1725	1150	1050	1550	800	750
1050	2.53	21	0.55	1125	1975	2550	1250	625	975	1800	1650	1300	13	1875	1325	1225	1750	850	900
1200	3.14	56	0.61	1300	2150	2825	1450	650	1125	1950	1800	1400	19	2050	1525	1400	2300	1200	1100
1500	4.57	66	0.76	1600	2450	3300	1800	700	1400	2250	2100	1575	19	2350	1875	1700	2675	1350	1325
1800	6.37	78	0.93	1925	2775	3825	2175	725	1700	2550	2400	1750	19	2675	2250	2025	3100	1450	1650

4:1 SLOPE

DIAMETER D (mm)	CONC m3	STEEL kg	EXC. FOR 100 mm DEPTH m3	A	B	C	E	F	G	H	I	J	SIZE	A BARS	B BARS	C BARS	D BARS	a	b
600	1.48	17	0.40	675	1525	1850	950	600	750	1350	1275	1150	13	1425	1050	950	1450	775	675
750	2.00	20	0.48	825	1675	2100	1175	625	950	1500	1425	1275	13	1575	1275	1150	1725	850	875
900	2.63	23	0.56	975	1825	2350	1400	650	1150	1650	1575	1375	13	1725	1525	1375	1925	850	1075
1050	3.36	25	0.65	1125	1975	2600	1650	675	1325	1800	1725	1500	13	1875	1750	1575	2200	900	1300
1200	4.20	65	0.74	1300	2150	2875	1875	700	1525	1950	1875	1600	19	2050	1950	1800	2750	1225	1525
1500	6.19	78	0.93	1600	2450	3375	2325	750	1925	2250	2175	1825	19	2350	2400	2250	3200	1275	1925
1800	8.69	92	1.13	1925	2775	3900	2800	800	2300	2550	2475		19	2675	2850	2725	3675	1350	2325

ALL DIMENSIONS SHOWN ARE IN MILLIMETERS OR METERS.
WHOLE NUMBERS INDICATE MILLIMETERS; DECIMAL
NUMBERS INDICATE METERS UNLESS OTHERWISE NOTED.

NHDOT STANDARD PLANS
CONCRETE HEADWALLS WITH 45° WINGS
FOR PIPES OTHER THAN R.C. *P.C.-5*

REV. DATE

PLATE 3
STANDARD HW-2

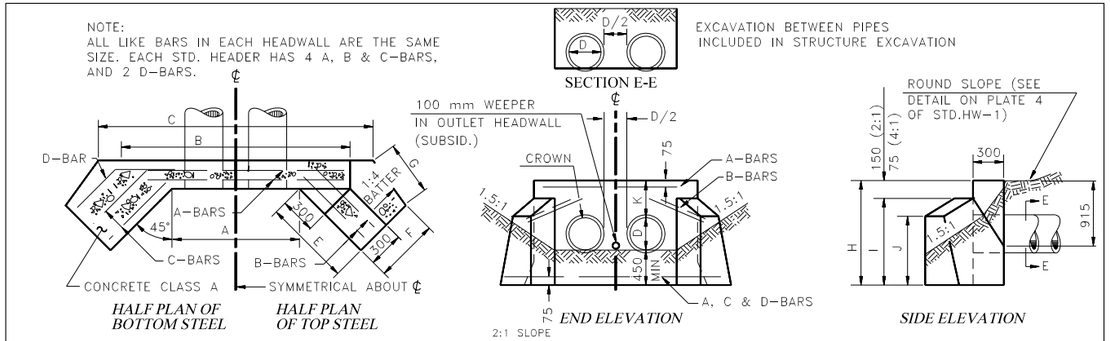

HALF PLAN OF BOTTOM STEEL *HALF PLAN OF TOP STEEL* *END ELEVATION* *SIDE ELEVATION*

2:1 SLOPE

DIAMETER D (mm)	QUANTITIES PER HEADER CONC m3	STEEL kg	EXC. FOR 100 mm DEPTH m3	DIMENSIONS A	B	C	E	F	G	H	I	J	K	D/2	REINFORCING STEEL SIZE	LENGTH A BARS	B BARS	C BARS	D BARS	D-BARS a	b
600	1.87	21	0.49	1800	2650	3000	900	575	675	1500	1350	1150	450	300	13	2550	950	900	1400	725	675
750	2.43	24	0.57	2225	3075	3525	1075	600	825	1650	1500	1225	450	375	13	2975	1125	1075	1575	750	825
900	3.05	28	0.67	2650	3500	4075	1250	625	975	1800	1650	1300	450	450	13	3400	1275	1225	1750	800	950
1050	4.15	73	0.81	3075	3925	4650	1525	650	1200	2025	1875	1450	525	525	19	3825	1575	1475	2350	1150	1200
1200	4.99	82	0.91	3500	4350	5175	1725	675	1350	2175	2025	1525	525	600	19	4250	1775	1675	2525	1150	1375
1350	5.93	89	1.00	3925	4775	5725	1900	700	1500	2325	2175	1600	525	675	19	4675	1975	1825	2750	1225	1525
1500	6.96	97	1.12	4350	5200	6250	2075	725	1650	2475	2325	1700	525	750	19	5100	2125	2000	2925	1225	1700
1650	8.07	105	1.21	4775	5625	6725	2250	750	1800	2625	2475	1775	525	825	19	5525	2300	2175	3125	1250	1875
1800	9.39	113	1.32	5200	6050	7250	2450	775	1950	2775	2625	1875	525	900	19	5950	2475	2350	3300	1275	2025

4:1 SLOPE

DIAMETER D (mm)	CONC m3	STEEL kg	EXC. FOR 100 mm DEPTH m3	A	B	C	E	F	G	H	I	J	K	D/2	SIZE	A BARS	B BARS	C BARS	D BARS	a	b
600	2.33	24	0.57	1800	2650	3000	1175	625	950	1500	1425	1275	450	300	13	2550	1275	1200	1650	750	900
750	3.00	28	0.68	2225	3075	3525	1400	650	1125	1650	1575	1375	450	375	13	2975	1500	1400	1875	800	1075
900	3.89	32	0.79	2650	3500	4075	1625	675	1325	1800	1725	1500	450	450	13	3400	1725	1600	2125	850	1275
1050	5.33	84	0.95	3075	3925	4650	1975	725	1600	2025	1950	1650	525	525	19	3825	2075	1925	2775	1200	1575
1200	6.45	93	1.06	3500	4350	5175	2200	750	1800	2175	2100	1775	525	600	19	4250	2300	2125	3025	1250	1775
1350	7.75	102	1.19	3925	4775	5725	2450	775	2025	2325	2250	1875	525	675	19	4675	2550	2350	3275	1275	2000
1500	9.10	111	1.31	4350	5200	6250	2675	800	2200	2475	2400	1975	525	750	19	5100	2775	2600	3525	1300	2225
1650	10.61	121	1.44	4775	5625	6725	2900	825	2400	2625	2550	2100	525	825	19	5525	3000	2825	3800	1375	2425
1800	12.33	128	1.58	5200	6050	7250	3150	850	2600	2775	2700	2200	525	900	19	5950	3250	2925	4025	1400	2625

ALL DIMENSIONS SHOWN ARE IN MILLIMETERS OR METERS.
WHOLE NUMBERS INDICATE MILLIMETERS; DECIMAL
NUMBERS INDICATE METERS UNLESS OTHERWISE NOTED.

NHDOT STANDARD PLANS
CONCRETE HEADWALLS WITH
45° WINGS FOR TWIN R.C. PIPE *P.C.-9*

REV. DATE

PLATE 4
STANDARD HW-2

STANDARD NO. HW-2

REVISION DATE
7-13-01

*.DGN FILE NAME
HW-2

METRIC STANDARD PLANS

STATE OF NEW HAMPSHIRE
DEPARTMENT OF TRANSPORTATION, CONCORD, N.H.

STANDARD NO. HW-2