STANDARD NO. GR-5

REVISION DATE
7-13-01

*.DGN FILE NAME
GR-5

METRIC STANDARD PLANS

STATE OF NEW HAMPSHIRE
DEPARTMENT OF TRANSPORTATION, CONCORD, N.H.

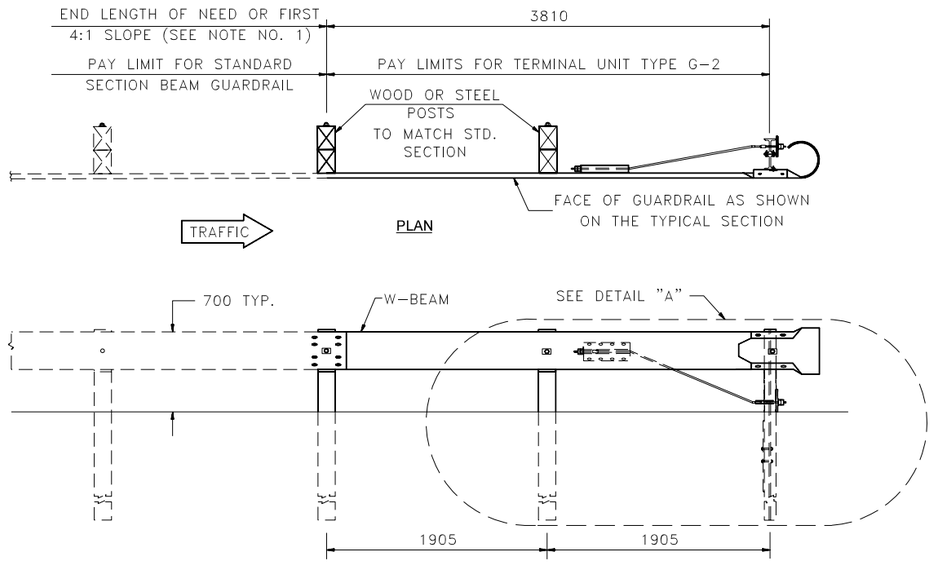

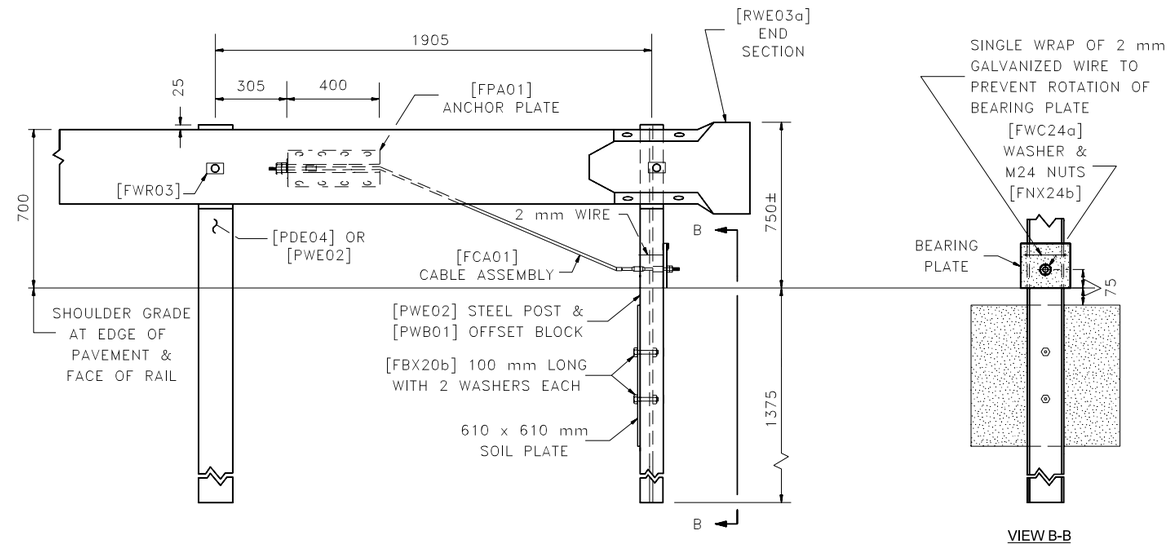

TERMINAL UNIT TYPE G-2

ITEM NO: 606.147- BEAM GUARDRAIL (TERMINAL UNIT TYPE G-2)
PAID: UNIT
USE: ON DIVIDED HIGHWAYS ONLY WITH DIRECTION OF TRAFFIC AS INDICATED

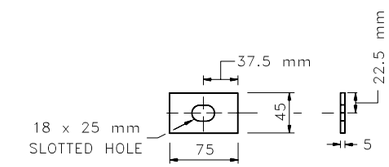

RECTANGULAR PLATE WASHER

[FWR03] (3 REQ'D)

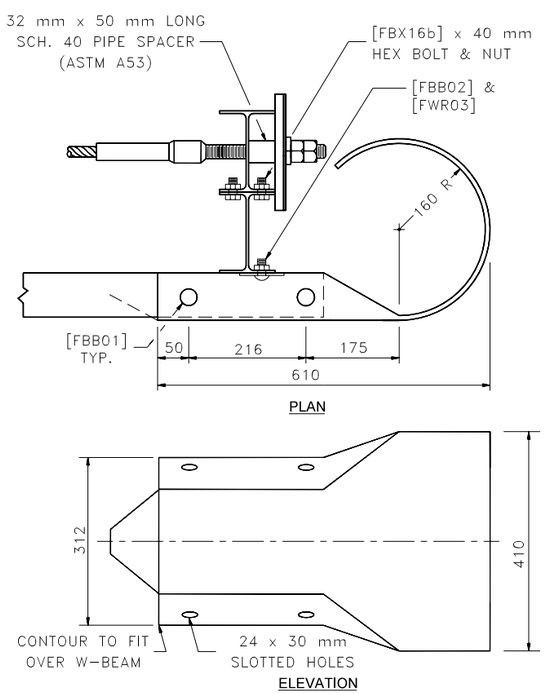

END SECTION

[RWE03a]

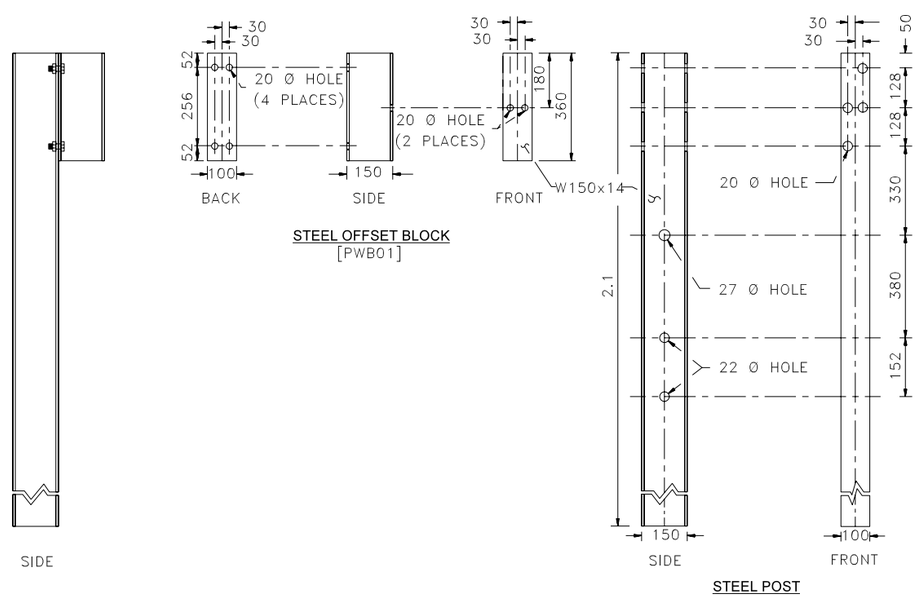

STRUCTURAL SHAPE STEEL POST & BLOCK

[PWE02] MODIFIED

GENERAL NOTES

1. THE LENGTH OF NEED IS THE TOTAL LENGTH OF A LONGITUDINAL BARRIER NEEDED TO SHIELD AN AREA OF CONCERN. TO DETERMINE THE LENGTH OF NEED, REFER TO *THE ROADSIDE DESIGN GUIDE* – AASHTO, 1996 THE G-2 UNIT SHALL TERMINATE IN A 4:1 OR FLATTER SLOPE.
2. DESIGNATIONS PROVIDED IN BRACKETS [ ] REFERENCE STANDARD ELEMENTS DETAILED IN *A GUIDE TO STANDARDIZED HIGHWAY BARRIER RAIL HARDWARE*, 1995, AASHTO-AGC-ARTBA JOINT COOPERATIVE COMMITTEE.
3. ALL DIMENSIONS SUBJECT TO MANUFACTURER'S TOLERANCES.
4. STANDARDS NO. GR-1 (OR GR-2), GR-3B & GR-3C SHALL BE USED IN CONJUNCTION WITH THIS STANDARD. SEE THESE STANDARDS FOR ADDITIONAL DETAILS OF COMMON HARDWARE.
5. TIGHTEN CABLE ASSEMBLY TO TAUT TENSION AND DOUBLE-NUT BOTH ENDS.

ALL DIMENSIONS SHOWN ARE IN MILLIMETERS OR METERS. WHOLE NUMBERS INDICATE MILLIMETERS; DECIMAL NUMBERS INDICATE METERS UNLESS OTHERWISE NOTED.

GUARDRAIL STANDARD

BEAM GUARDRAIL
TERMINAL UNIT TYPE G-2

STANDARD NO. GR-5

REVISION DATE
7-13-01

*.DGN FILE NAME
GR-5

METRIC STANDARD PLANS

STATE OF NEW HAMPSHIRE
DEPARTMENT OF TRANSPORTATION, CONCORD, N.H.

STANDARD NO. GR-5