STANDARD NO. FN-1

REVISION DATE
7-13-01

*.DGN FILE NAME
FN-1

METRIC STANDARD PLANS

STATE OF NEW HAMPSHIRE
DEPARTMENT OF TRANSPORTATION, CONCORD, N.H.

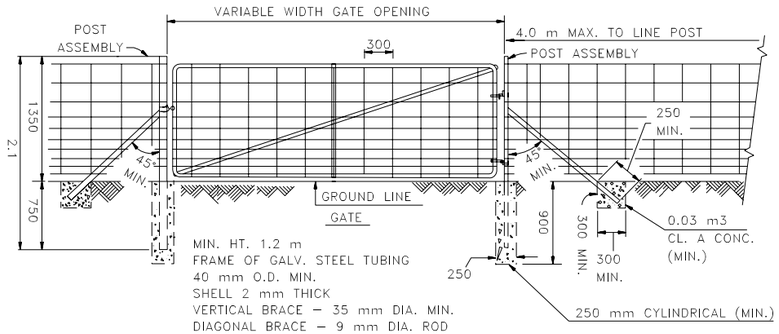

ELEVATION

GENERAL NOTES

1. ALL END POSTS SHALL HAVE ONE BRACE, ALL CORNER AND INTERMEDIATE BRACE OR PULL POSTS SHALL HAVE TWO BRACES.
2. INTERMEDIATE OR LINE POSTS SHALL BE STANDARD STUDDED TEE POSTS.
3. END POSTS, CORNER POSTS AND PULL POSTS SHALL BE AN ANGLE POST DETAILED IN PLATE 3. BRACES SHALL BE AN ANGLE POST DETAILED IN PLATE 4.
4. WHERE GROUND CONDITION PERMITS, FORMS FOR FOOTING WILL NOT BE REQUIRED.
5. CONCRETE SHALL BE CLASS A.

ALL DIMENSIONS SHOWN ARE IN MILLIMETERS OR METERS. WHOLE NUMBERS INDICATE MILLIMETERS; DECIMAL NUMBERS INDICATE METERS UNLESS OTHERWISE NOTED.	NHDOT STANDARD PLANS *WOVEN WIRE FENCE (ITEM 607.1)*	REV. DATE	PLATE 1 STANDARD FN-1

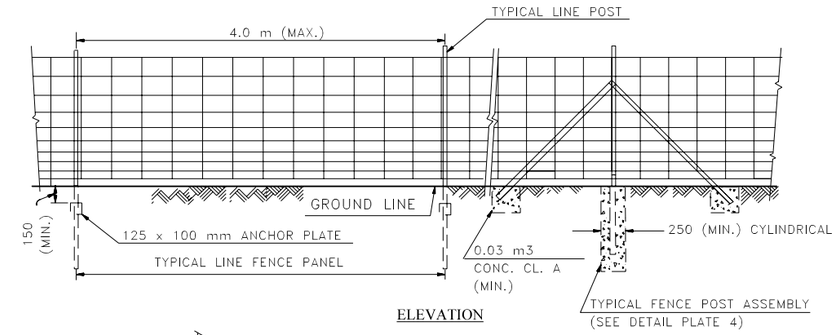

ELEVATION

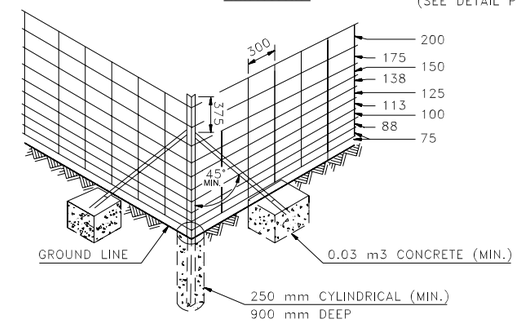

DETAIL OF CORNER BRACE - POST ASSEMBLY

ALL DIMENSIONS SHOWN ARE IN MILLIMETERS OR METERS. WHOLE NUMBERS INDICATE MILLIMETERS; DECIMAL NUMBERS INDICATE METERS UNLESS OTHERWISE NOTED.	NHDOT STANDARD PLANS *POST ASSEMBLIES FOR WOVEN WIRE FENCE (ITEM 607.41)*	REV. DATE	PLATE 2 STANDARD FN-1

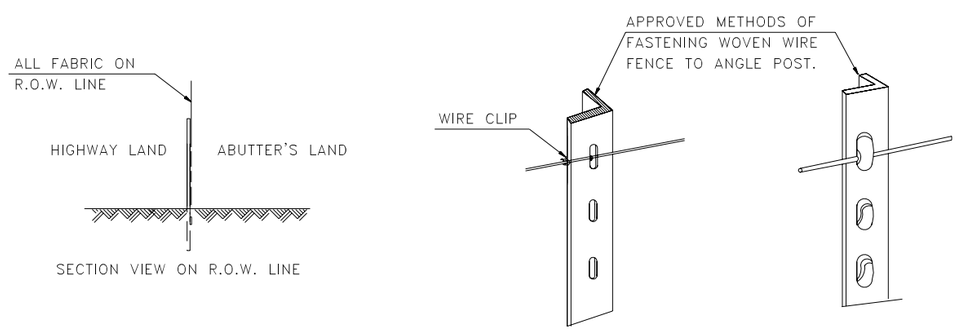

63 x 63 x 6.3 mm ANGLE POST
6.1 kg/m (NOMINAL)

ALL DIMENSIONS SHOWN ARE IN MILLIMETERS OR METERS. WHOLE NUMBERS INDICATE MILLIMETERS; DECIMAL NUMBERS INDICATE METERS UNLESS OTHERWISE NOTED.	NHDOT STANDARD PLANS *POST ASSEMBLIES FOR WOVEN WIRE FENCE*	REV. DATE	PLATE 3 STANDARD FN-1

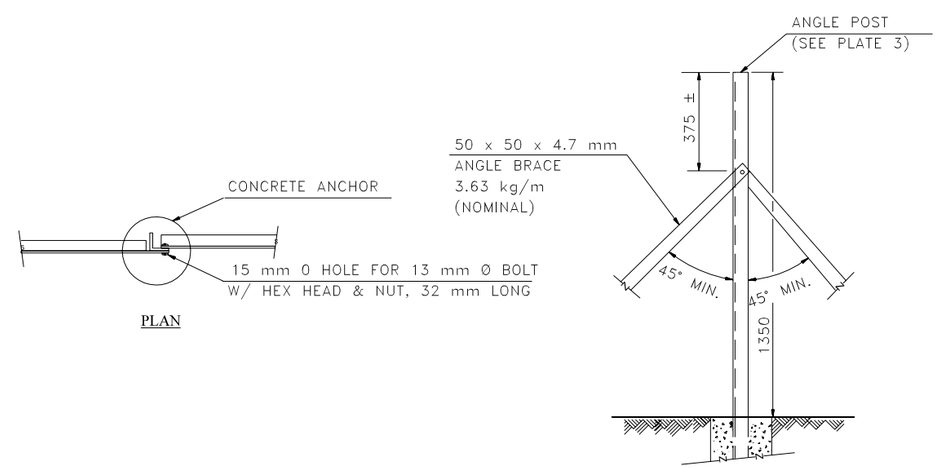

PLAN

ELEVATION

TYPICAL FENCE POST ASSEMBLY

ALL DIMENSIONS SHOWN ARE IN MILLIMETERS OR METERS. WHOLE NUMBERS INDICATE MILLIMETERS; DECIMAL NUMBERS INDICATE METERS UNLESS OTHERWISE NOTED.	NHDOT STANDARD PLANS *ANGLE BRACES FOR WOVEN WIRE FENCE*	REV. DATE	PLATE 4 STANDARD FN-1

STANDARD NO. FN-1

REVISION DATE
7-13-01

*.DGN FILE NAME
FN-1

METRIC STANDARD PLANS

STATE OF NEW HAMPSHIRE
DEPARTMENT OF TRANSPORTATION, CONCORD, N.H.

STANDARD NO. FN-1