STANDARD NO. DR-1

REVISION DATE
7-13-01

*.DGN FILE NAME
DR-1

METRIC STANDARD PLANS

STATE OF NEW HAMPSHIRE
DEPARTMENT OF TRANSPORTATION, CONCORD, N.H.

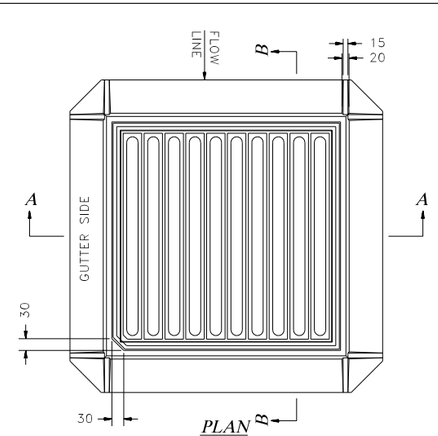

PLAN

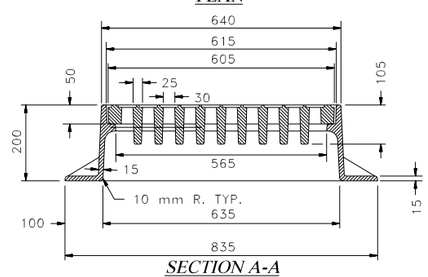

SECTION A-A

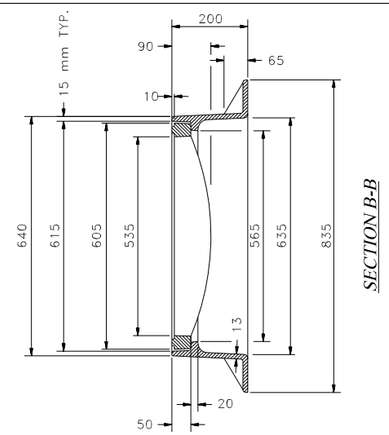

SECTION B-B

GENERAL NOTES

1. ALL DIMENSIONS ARE NOMINAL.
2. FREE OPEN AREA = 0.17 m^2.
3. NOT TO BE USED WHEN BICYCLE TRAFFIC IS ANTICIPATED.
4. USE 3-FLANGE FRAME IF INSTALLED ADJACENT TO GRANITE CURB.

ALL DIMENSIONS SHOWN ARE IN MILLIMETERS OR METERS. WHOLE NUMBERS INDICATE MILLIMETERS; DECIMAL NUMBERS INDICATE METERS UNLESS OTHERWISE NOTED.

NHDOT STANDARD PLANS

TYPE "A" GRATE & FRAME

REV. DATE

PLATE 1
STANDARD DR-1

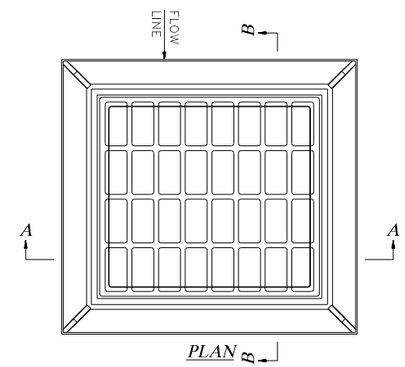

PLAN

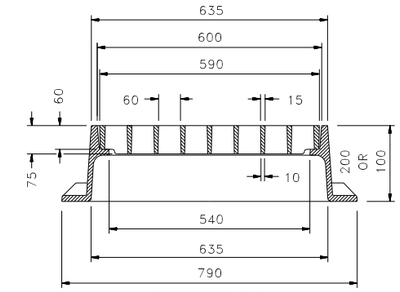

SECTION A-A

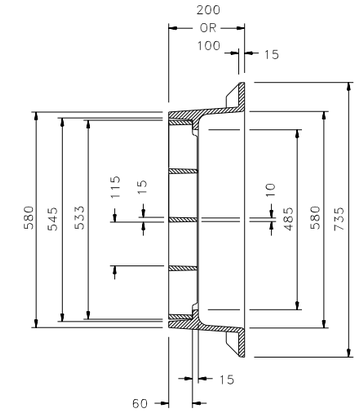

SECTION B-B

GENERAL NOTES

1. ALL DIMENSIONS ARE NOMINAL.
2. FRAME AVAILABLE IN 100 OR 200 mm HEIGHTS.
3. FREE OPEN AREA = 0.22 m^2.
4. USE 3-FLANGE FRAME IF INSTALLED ADJACENT TO GRANITE CURB.

ALL DIMENSIONS SHOWN ARE IN MILLIMETERS OR METERS. WHOLE NUMBERS INDICATE MILLIMETERS; DECIMAL NUMBERS INDICATE METERS UNLESS OTHERWISE NOTED.

NHDOT STANDARD PLANS

TYPE "B" GRATE & FRAME

REV. DATE

PLATE 2
STANDARD DR-1

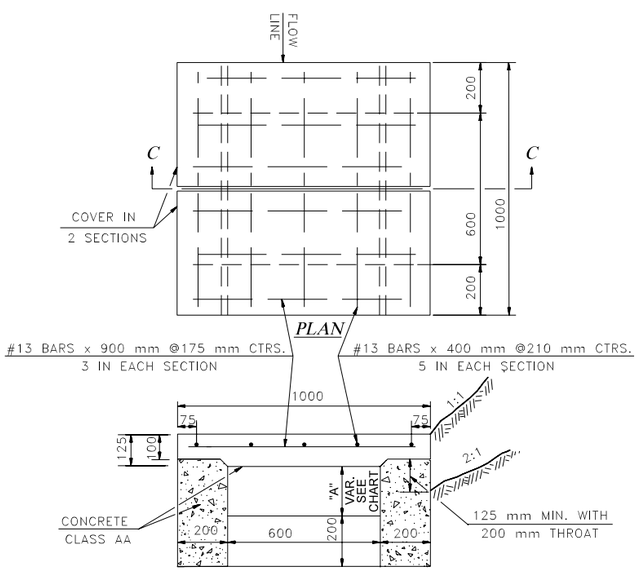

SECTION C-C

TO BE USED IN BERM DITCHES AND AT LOCATIONS INACCESSIBLE TO VEHICULAR TRAFFIC

PIPE DIA MILLIMETERS	THROAT DEPTH "A" MILLIMETERS	
	ONE THROAT	TWO THROAT
300	200	200
350	200	200
375	200	200
400	225	200
450	400	200
500	400	225
600	450	400

IN A SERIES OF CONNECTING C.B.'S OR D.I.'S, THE OUTLET PIPES MAY INCREASE IN DIAMETER, BUT THE SURFACE THROAT OPENINGS ARE NOT AFFECTED.

ALL DIMENSIONS SHOWN ARE IN MILLIMETERS OR METERS. WHOLE NUMBERS INDICATE MILLIMETERS; DECIMAL NUMBERS INDICATE METERS UNLESS OTHERWISE NOTED.

NHDOT STANDARD PLANS

TYPE "C" GRATE & FRAME

REV. DATE

PLATE 3
STANDARD DR-1

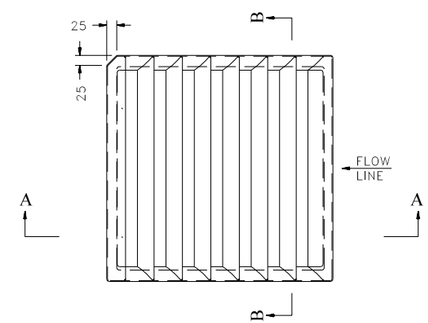

PLAN

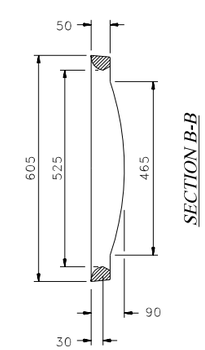

SECTION B-B

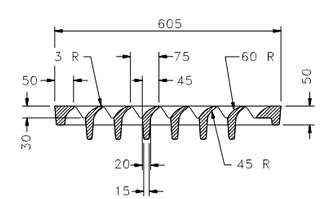

SECTION A-A

GENERAL NOTES

1. ALL DIMENSIONS ARE NOMINAL.
2. USE WITH TYPE "A" FRAME.
3. NOT TO BE USED WHEN BICYCLE TRAFFIC IS ANTICIPATED.

ALL DIMENSIONS SHOWN ARE IN MILLIMETERS OR METERS. WHOLE NUMBERS INDICATE MILLIMETERS; DECIMAL NUMBERS INDICATE METERS UNLESS OTHERWISE NOTED.

NHDOT STANDARD PLANS

TYPE "E" GRATE

REV. DATE

PLATE 4
STANDARD DR-1

STANDARD NO. DR-1

REVISION DATE
7-13-01

*.DGN FILE NAME
DR-1

METRIC STANDARD PLANS

STATE OF NEW HAMPSHIRE
DEPARTMENT OF TRANSPORTATION, CONCORD, N.H.

STANDARD NO. DR-1