TRAFFIC SIGNAL MAST ARM FOUNDATION – TYPE 1B

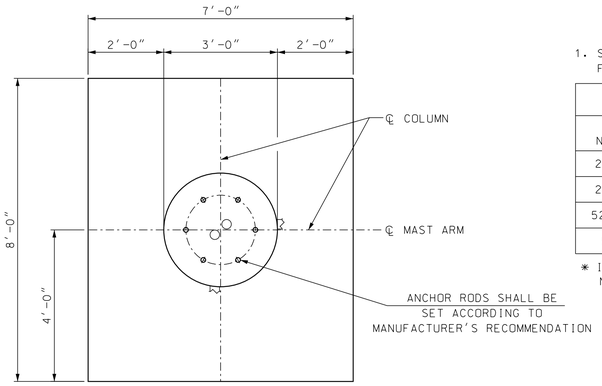

PLAN VIEW

NOTES

1. SEE MAST ARM FOUNDATION – TYPE 1A SPECIAL DETAIL. FOR TYPE 1 FOUNDATION NOTES.

TYPICAL QUANTITIES PER BASE		
ITEM NUMBER	ITEM	QUANTITY
206.1*	COMMON STRUCTURE EXCAVATION	22 CY
209.1*	GRANULAR BACKFILL	16.6 CY
520.21*	CONCRETE CLASS B. FOOTINGS	5.4 CY
544*	REINFORCING STEEL	457 LB

* ITEM NUMBERS ARE FOR SPECIFICATION REFERENCE ONLY. NO SEPARATE PAYMENT WILL BE MADE FOR THESE ITEMS.

TYPE 1B REINFORCING SCHEDULE

MARK	SIZE	NO.	UNBENT LENGTH	TYPE
B1	#4	14	7'-6"	——
B2	#4	16	6'-6"	——
B3	#7	16	7'-4"	L
B4	#5	8	9'-3"	○

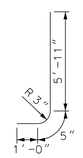

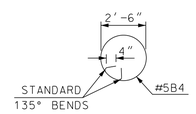

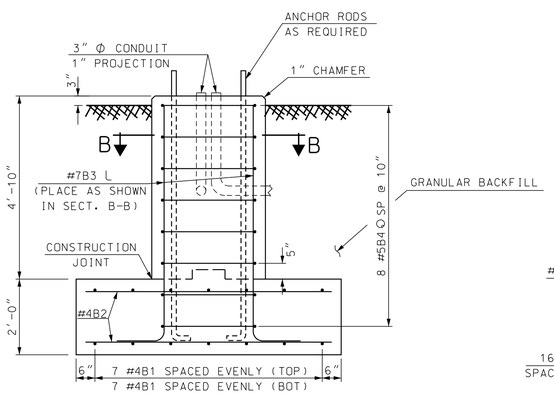

ELEVATION VIEW

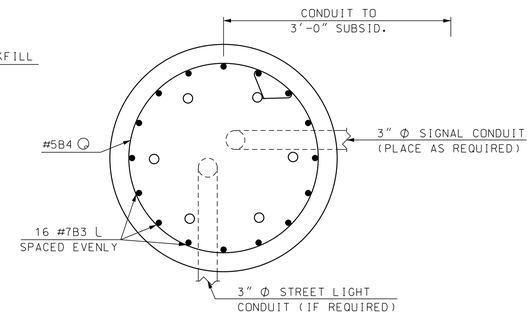

SECTION B-B

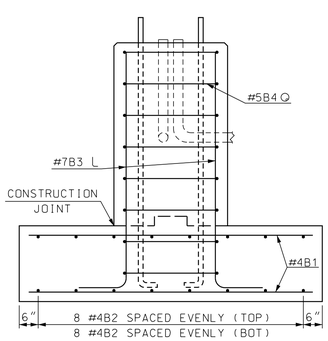

END ELEVATION VIEW

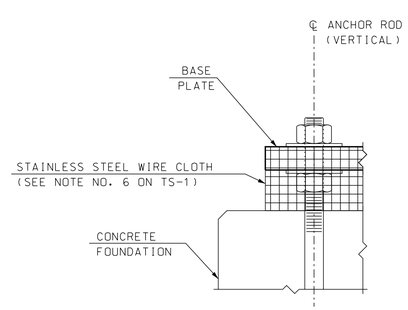

SCREEN DETAIL

TRAFFIC SIGNAL MAST ARM FOUNDATION – TYPE 1C

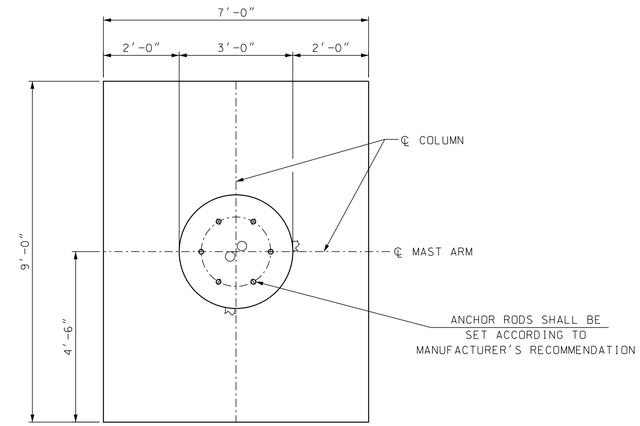

PLAN VIEW

NOTES

1. SEE MAST ARM FOUNDATION – TYPE 1A SPECIAL DETAIL. FOR TYPE 1 FOUNDATION NOTES.

TYPICAL QUANTITIES PER BASE		
ITEM NUMBER	ITEM	QUANTITY
206.1*	COMMON STRUCTURE EXCAVATION	24 CY
209.1*	GRANULAR BACKFILL	18.3 CY
520.21*	CONCRETE CLASS B. FOOTINGS	5.9 CY
544*	REINFORCING STEEL	519 LB

* ITEM NUMBERS ARE FOR SPECIFICATION REFERENCE ONLY. NO SEPARATE PAYMENT WILL BE MADE FOR THESE ITEMS.

TYPE 1C REINFORCING SCHEDULE

MARK	SIZE	NO.	UNBENT LENGTH	TYPE
C1	#4	7	8'-6"	——
C2	#5	7	8'-6"	——
C3	#4	9	6'-6"	——
C4	#5	9	6'-6"	——
C5	#7	16	7'-4"	L
C6	#5	8	9'-3"	○

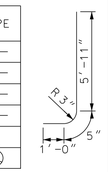

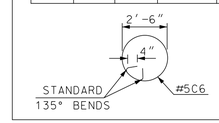

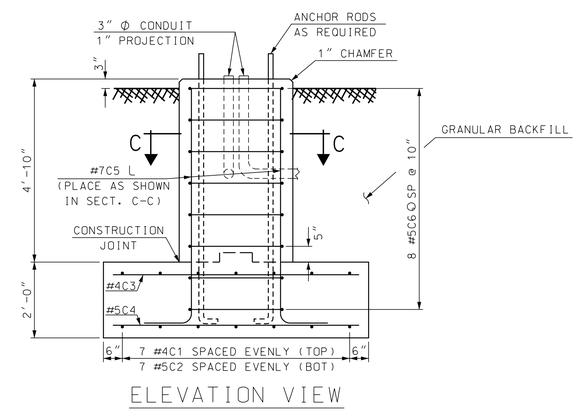

ELEVATION VIEW

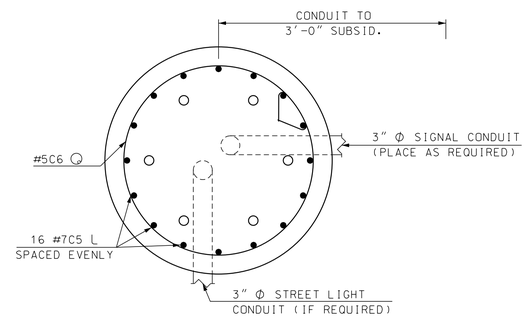

SECTION C-C

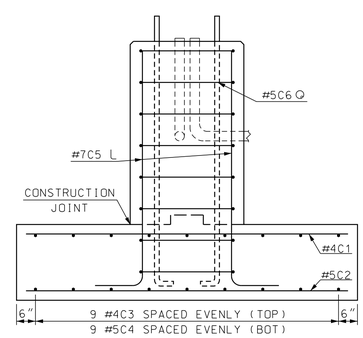

END ELEVATION VIEW

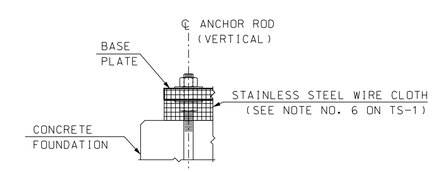

SCREEN DETAIL

STATE OF NEW HAMPSHIRE

DEPARTMENT OF TRANSPORTATION • BUREAU OF TRAFFIC

Traffic Signal Mast Arm Foundations - Type 1B & 1C

REVISION DATE	DGN	STATE PROJECT NO.	SHEET NO.	TOTAL SHEETS
05-06-16	2016_ma_fd_1b&c	40405	X	

NUMBER	DATE	STATION	DESCRIPTION

REVISIONS AFTER PROPOSAL

SDR PROCESSED DATE
NEW DESIGN KFD DATE 01/15/2016
SHEET CHECKED NAME3 DATE DATE3
AS BUILT DETAILS DATE