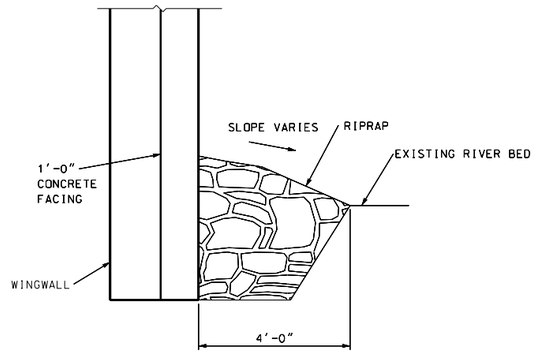

RIPRAP CROSS SECTION

SCALE: 1/4" = 1'-0"

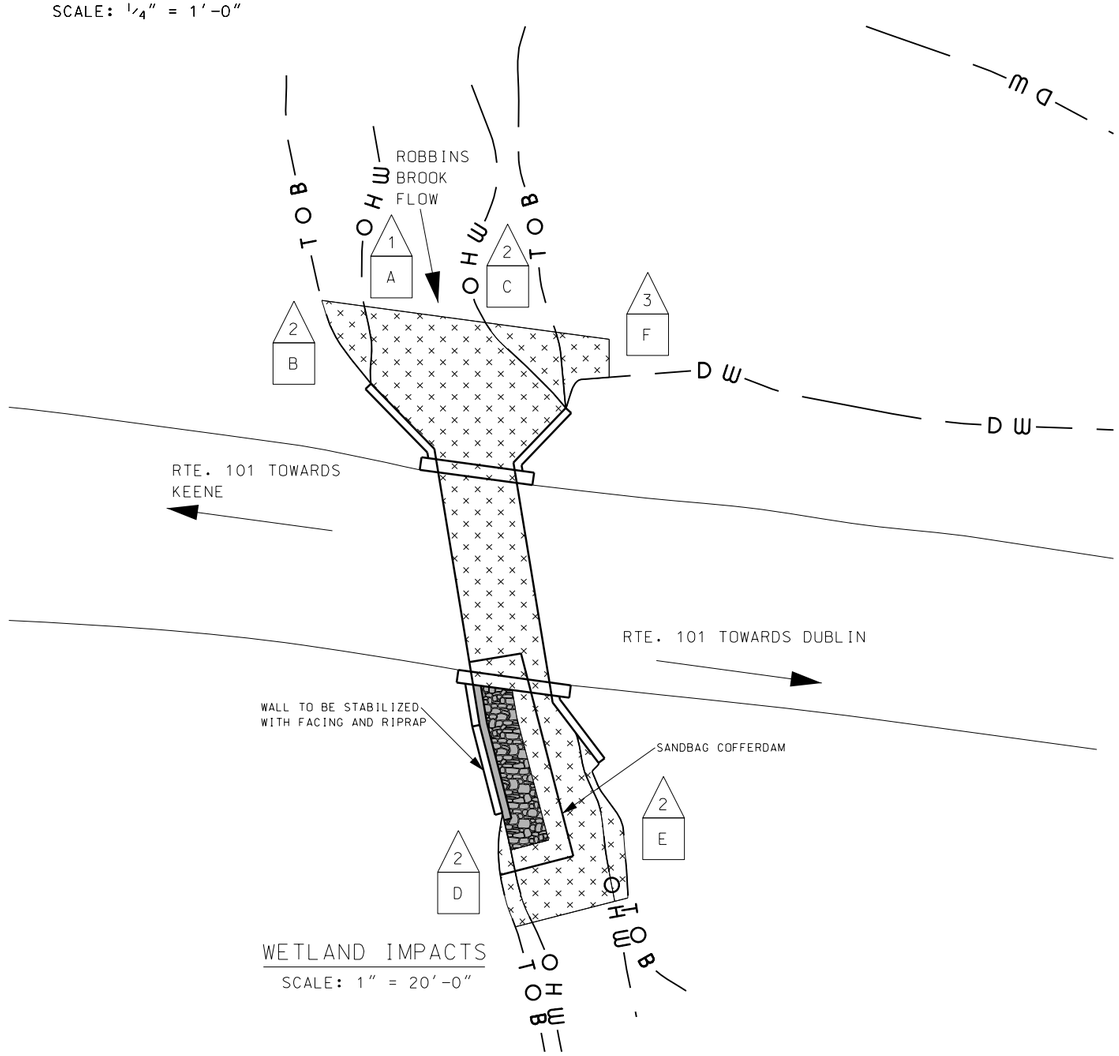

WETLAND IMPACTS

SCALE: 1" = 20'-0"

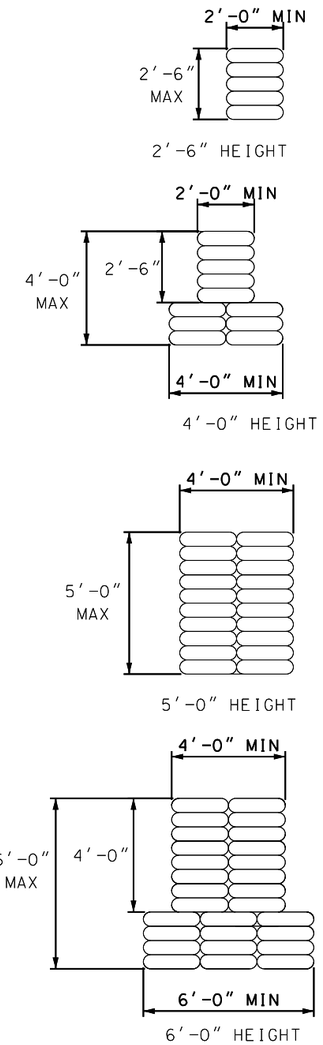

COFFERDAM DETAILS

SCALE: 3/16" = 1'

WETLAND IMPACT SUMMARY					
WETLAND NUMBER	WETLAND CLASSIFICATION	LOCATION	AREA		
			PERMANENT IMPACTS		TEMPORARY IMPACTS SF
			N.H.W.B. (NON-WETLAND) SF	N.H.W.B. & A.C.O.E. (WETLAND) SF	
1	R2UB1.2	A		107	910
2	BANK	B			38
2	BANK	C			48
2	BANK	D			25
2	BANK	E			40
3	PEM/SS1E	F			40

PERMANENT IMPACTS: 107 SF
TEMPORARY IMPACTS: 1101 SF

TOTAL IMPACTS: 1208 SF

WETLAND CLASSIFICATION CODES	
R2UB1.2	RIVERINE, LOWER PERENNIAL, UNCONSOLIDATED BOTTOM, COBBLE GRAVEL/SAND
PEM/SS1E	PALUSTRINE, EMERGENT/SCRUB-SHRUB, BROAD-LEAVED DECIDUOUS, SEASONALLY FLOODED/ SATURATED
BANK	

LEGEND

TYPE OF WETLAND IMPACT	SHADING/ HATCHING
NEW HAMPSHIRE WETLANDS BUREAU (PERMANENT NON-WETLAND)	
NEW HAMPSHIRE WETLANDS BUREAU & ARMY CORP OF ENGINEERS (PERMANENT WETLAND)	
TEMPORARY IMPACTS	

- # WETLAND DESIGNATION NUMBER
- # WETLAND IMPACT LOCATION
- # WETLAND MITIGATION AREA
- MITIGATION

STONE GRADATION
100% < 18"
50% < 10"
15% < 8"

WETLANDS DELINEATED BY M. URBAN

STATE OF NEW HAMPSHIRE
DEPARTMENT OF TRANSPORTATION * BUREAU OF BRIDGE MAINTENANCE

TOWN MARLBOROUGH BRIDGE NO. 090/127 STATE PROJECT 40517
LOCATION RTE. 101 OVER ROBBINS BROOK

WETLAND IMPACTS

BRIDGE SHEET 1 OF 1

REVISIONS AFTER PROPOSAL	BY	DATE		BY	DATE
DESIGNED	ANW	1/8/16	CHECKED		
DRAWN	ANW	1/8/16	CHECKED		
QUANTITIES			CHECKED		

FILE NUMBER MARLBOROUGH 090/127

SHEET SCALE	ISSUE DATE	FISCAL YEAR	CREW	SHEET NO.	TOTAL SHEETS
AS NOTED	REV. DATE	2016	07	1	1