STATE OF NEW HAMPSHIRE
INTER-DEPARTMENT COMMUNICATION

DATE: June 5, 2017

FROM: Matt Urban
Wetlands Program Manager

AT (OFFICE): Department of Transportation

Bureau of Environment

SUBJECT Dredge & Fill Application
Rochester, 21832

TO Gino Infascelli, Public Works Permitting Officer
New Hampshire Wetlands Bureau
29 Hazen Drive, P.O. Box 95
Concord, NH 03302-0095

Forwarded herewith is the application package prepared by NH DOT Bureau of Highway Design for the subject Major impact project. This project is classified as Major per Env-Wt 303.02(p). The project is located on NH Route 11 in the Town of Rochester, NH. The proposed work consists of replacing the existing 7'w x 5'h arch cmp with a 103"w x 71"h polymer coated corrugated metal arch pipe. The proposed pipe with be constructed approximately 5 feet east of the existing. The existing crossing will be replaced with a 36" RCP wildlife crossing.

This project was reviewed at the Natural Resource Agency Coordination Meeting on 12/21/2016. A copy of the minutes has been included with this application package. A copy of this application and plans can be accessed on the Departments website via the following link: http://www.nh.gov/dot/org/projectdevelopment/environment/units/program-management/wetland-applications.htm

Mitigation in the amount of $ 23,278.80 a mitigation narrative has been included within the application package.

A payment voucher has been processed for this application (Voucher #489430) in the amount of $411.00.

The lead people to contact for this project are Tobey Reynolds, Bureau of Highway Design (271-2171 or tobey.reynolds@dot.nh.gov) or Matt Urban, Wetlands Program Manager, Bureau of Environment (271-3226 or matt.urban@dot.nh.gov).

If and when this application meets with the approval of the Bureau, please send the permit directly to Matt Urban, Wetlands Program Manager, Bureau of Environment.

MRU:sel
Enclosures
cc:
BOE Original
Town of Rochester (4 copies via certified mail)
Edna Feighner, NH Division of Historic Resources (Cultural Review Within)
Bureau of Construction
Carol Henderson, NH Fish & Game (via electronic notification)
Maria Tur, US Fish & Wildlife (via electronic notification)
Mark Kern, US Environmental Protection Agency (via electronic notification)
Michael Hicks, US Army Corp of Engineers (via electronic notification)
Kevin Nyhan, BOE (via electronic notification)

S:\Environment\PROJECTS\ROCHESTER\21832\Wetlands\WETAPP - Design.doc

NEW HAMPSHIRE DEPARTMENT OF Environmental Services

WETLANDS PERMIT APPLICATION

Land Resources Management
Wetlands Bureau
Check the status of your application: www.des.nh.gov/onestop

RSA/Rule: RSA 482-A/ Env-Wt 100-900

1. REVIEW TIME:
Indicate your Review Time below. Refer to Guidance Document A for instructions.

☒ Standard Review (Minimum, Minor or Major Impact) ☐ Expedited Review (Minimum Impact only)

2. PROJECT LOCATION:
Separate applications must be filed with each municipality that jurisdictional impacts will occur in.

ADDRESS: **NH Route 11** TOWN/CITY: **Rochester**

TAX MAP: **N/A** BLOCK: **N/A** LOT: **N/A** UNIT: **N/A**

USGS TOPO MAP WATERBODY NAME: **Unnamed Stream** ☐ NA STREAM WATERSHED SIZE: **1.22 sq mile** ☐ NA

LOCATION COORDINATES (If known): **43.338574, -71.014794** ☒ Latitude/Longitude ☐ UTM ☐ State Plane

3. PROJECT DESCRIPTION:
Provide a brief description of the project outlining the scope of work. Attach additional sheets as needed to provide a detailed explanation of your project. DO NOT reply "See Attached" in the space provided below.

A culvert replacement project located in Rochester along NH Route 11, approx. 1.5 miles west of the Spaulding Turnpike. The project is to replace the existing 5'w x 7'h (1958) arch cmp with a 103"w x 71"h polymer coated corrugated metal arch pipe, located approximately 5-feet east from the existing culvert. Additionally a 36" RCP wildlife crossing will be constructed parallel to the proposed culvert at the existing culvert's location and at an elevation 3-feet higher than the proposed project culvert.

4. SHORELINE FRONTAGE

☒ NA This lot has no shoreline frontage. SHORELINE FRONTAGE:

Shoreline frontage is calculated by determining the average of the distances of the actual natural navigable shoreline frontage and a straight line drawn between the property lines, both of which are measured at the normal high water line.

5. RELATED PERMITS, ENFORCEMENT, EMERGENCY AUTHORIZATION, SHORELAND, ALTERATION OF TERRAIN, ETC.

None

6. NATURAL HERITAGE BUREAU & DESIGNATED RIVERS:
See the Instructions & Required Attachments document for instructions to complete a & b below.

a. Natural Heritage Bureau File ID: NHB **17** - **1659** .

b. ☒ Designated River the project is in ¼ miles of: **Cocheco River** ; and
date a copy of the application was sent to the Local River Management Advisory Committee: Month: 6 Day: 5 Year: 2017
☐ NA

7. APPLICANT INFORMATION (Desired permit holder)		
LAST NAME, FIRST NAME, M.I.: **STATE OF NEW HAMPSHIRE (Tobey Reynolds)**		
TRUST / COMPANY NAME: **NH DEPARTMENT OF TRANSPORTATION**	MAILING ADDRESS: **7 Hazen Drive, PO Box 483**	
TOWN/CITY: **Concord**	STATE: **NH**	ZIP CODE: **03302-0483**
EMAIL or FAX: **(603) 271-7025**	PHONE: **(603) 271-2171**	
ELECTRONIC COMMUNICATION: By initialing here: TR, I hereby authorize NHDES to communicate all matters relative to this application electronically		

8. PROPERTY OWNER INFORMATION (If different than applicant)		
LAST NAME, FIRST NAME, M.I.:		
TRUST / COMPANY NAME:	MAILING ADDRESS:	
TOWN/CITY:	STATE:	ZIP CODE:
EMAIL or FAX:	PHONE:	
ELECTRONIC COMMUNICATION: By initialing here _____, I hereby authorize NHDES to communicate all matters relative to this application electronically		

9. AUTHORIZED AGENT INFORMATION		
LAST NAME, FIRST NAME, M.I.:	COMPANY NAME:	
MAILING ADDRESS:		
TOWN/CITY:	STATE:	ZIP CODE:
EMAIL or FAX:	PHONE:	
ELECTRONIC COMMUNICATION: By initialing here _____, I hereby authorize NHDES to communicate all matters relative to this application electronically		

10. PROPERTY OWNER SIGNATURE:

See the Instructions & Required Attachments document for clarification of the below statements

By signing the application, I am certifying that:

1. I authorize the applicant and/or agent indicated on this form to act in my behalf in the processing of this application, and to furnish upon request, supplemental information in support of this permit application.
2. I have reviewed and submitted information & attachments outlined in the Instructions and Required Attachment document.
3. All abutters have been identified in accordance with RSA 482-A:3, I and Env-Wt 100-900.
4. I have read and provided the required information outlined in Env-Wt 302.04 for the applicable project type.
5. I have read and understand Env-Wt 302.03 and have chosen the least impacting alternative.
6. Any structure that I am proposing to repair/replace was either previously permitted by the Wetlands Bureau or would be considered grandfathered per Env-Wt 101.47.
7. I have submitted a Request for Project Review (RPR) Form (www.nh.gov/nhdhr/review) to the NH State Historic Preservation Officer (SHPO) at the NH Division of Historical Resources to identify the presence of historical/ archeological resources while coordinating with the lead federal agency for NHPA 106 compliance.
8. I authorize NHDES and the municipal conservation commission to inspect the site of the proposed project.
9. I have reviewed the information being submitted and that to the best of my knowledge the information is true and accurate.
10. I understand that the willful submission of falsified or misrepresented information to the New Hampshire Department of Environmental Services is a criminal act, which may result in legal action.
11. I am aware that the work I am proposing may require additional state, local or federal permits which I am responsible for obtaining.

Tobey Reynolds	Tobey Reynolds	6/2/2017
Property Owner Signature	Print name legibly	Date

MUNICIPAL SIGNATURES

11. CONSERVATION COMMISSION SIGNATURE

The signature below certifies that the municipal conservation commission has reviewed this application, and:

1. Waives its right to intervene per RSA 482-A:11;
2. Believes that the application and submitted plans accurately represent the proposed project; and
3. Has no objection to permitting the proposed work.

⇨	Print name legibly	Date

DIRECTIONS FOR CONSERVATION COMMISSION

1. Expedited review ONLY requires that the conservation commission's signature is obtained in the space above.

2. Expedited review requires the Conservation Commission signature be obtained **prior** to the submittal of the original application to the Town/City Clerk for signature.

3. The Conservation Commission may refuse to sign. If the Conservation Commission does not sign this statement for any reason, the application is not eligible for expedited review and the application will reviewed in the standard review time frame.

12. TOWN / CITY CLERK SIGNATURE

As required by Chapter 482-A:3 (amended 2014), I hereby certify that the applicant has filed four application forms, four detailed plans, and four USGS location maps with the town/city indicated below.

⇨ Town/City Clerk Signature	Print name legibly	Town/City	Date

DIRECTIONS FOR TOWN/CITY CLERK:

Per RSA 482-A:3,I

1. For applications where "Expedited Review" is checked on page 1, if the Conservation Commission signature is not present, NHDES will accept the permit application, but it will NOT receive the expedited review time.

2. IMMEDIATELY sign the original application form and four copies in the signature space provided above;

3. Return the signed original application form and attachments to the applicant so that the applicant may submit the application form and attachments to NHDES by mail or hand delivery.

4. IMMEDIATELY distribute a copy of the application with one complete set of attachments to each of the following bodies: the municipal Conservation Commission, the local governing body (Board of Selectmen or Town/City Council), and the Planning Board; and

5. Retain one copy of the application form and one complete set of attachments and make them reasonably accessible for public review.

DIRECTIONS FOR APPLICANT:

1. Submit the single, original permit application form bearing the signature of the Town/ City Clerk, additional materials, and the application fee to NHDES by mail or hand delivery.

13. IMPACT AREA:

For each jurisdictional area that will be/has been impacted, provide square feet and, if applicable, linear feet of impact

Permanent: impacts that will remain after the project is complete.

Temporary: impacts not intended to remain (and will be restored to pre-construction conditions) after the project is complete.

JURISDICTIONAL AREA	PERMANENT Sq. Ft. / Lin. Ft.		TEMPORARY Sq. Ft. / Lin. Ft.	
Forested wetland		☐ ATF		☐ ATF
Scrub-shrub wetland		☐ ATF	37	☐ ATF
Emergent wetland		☐ ATF		☐ ATF
Wet meadow		☐ ATF		☐ ATF
Intermittent stream		☐ ATF		☐ ATF
Perennial Stream / River	1153 / 190	☐ ATF	223 / 67	☐ ATF
Lake / Pond	/	☐ ATF	/	☐ ATF
Bank - Intermittent stream	/	☐ ATF	/	☐ ATF
Bank - Perennial stream / River	265 / 62	☐ ATF	377 / 88	☐ ATF
Bank - Lake / Pond	/	☐ ATF	/	☐ ATF
Tidal water	/	☐ ATF	/	☐ ATF
Salt marsh		☐ ATF		☐ ATF
Sand dune		☐ ATF		☐ ATF
Prime wetland		☐ ATF		☐ ATF
Prime wetland buffer		☐ ATF		☐ ATF
Undeveloped Tidal Buffer Zone (TBZ)		☐ ATF		☐ ATF
Previously-developed upland in TBZ		☐ ATF		☐ ATF
Docking - Lake / Pond		☐ ATF		☐ ATF
Docking - River		☐ ATF		☐ ATF
Docking - Tidal Water		☐ ATF		☐ ATF
TOTAL	1418 / 252		637 / 155	

14. APPLICATION FEE: See the Instructions & Required Attachments document for further instruction

☐ Minimum Impact Fee: Flat fee of $ 200

☒ Minor or Major Impact Fee: Calculate using the below table below

Permanent and Temporary (non-docking)	**2055** sq. ft.	X $0.20 =	**$ 411.00**
Temporary (seasonal) docking structure:	sq. ft.	X $1.00 =	**$ 0.00**
Permanent docking structure:	sq. ft.	X $2.00 =	**$ 0.00**
Projects proposing shoreline structures (including docks) add $200 =			**$ 0.00**
Total =			**$ 411.00**
The Application Fee is the above calculated Total or $200, whichever is greater =			**$ 411.00**

Rochester, #21832

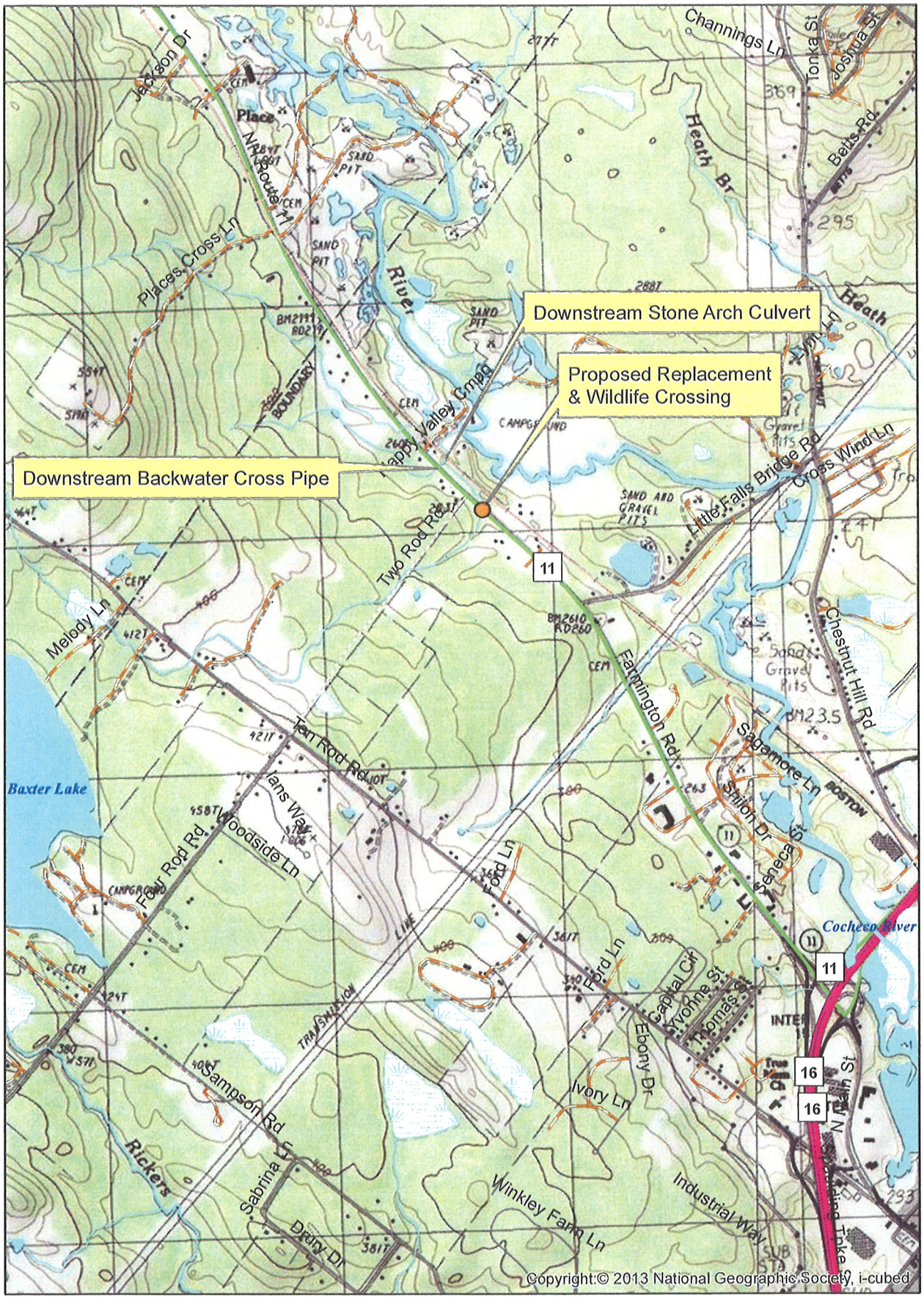

0 0.2 0.4 0.8 Miles

1:24,000

WETLANDS PERMIT APPLICATION – ATTACHMENT A
MINOR AND MAJOR - 20 QUESTIONS
Land Resources Management
Wetlands Bureau

Check the Status of your application: www.des.nh.gov/onestop

RSA/ Rule: RSA 482-A, Env-Wt 100-900

Env-Wt 302.04 Requirements for Application Evaluation - For any major or minor project, the applicant shall demonstrate by plan and example that the following factors have been considered in the project's design in assessing the impact of the proposed project to areas and environments under the department's jurisdiction. Respond with statements demonstrating:

1. The need for the proposed impact.

This project proposes to replace an existing 7'w x 5'h arch cmp, constructed in 1958. The culvert is located in Rochester and crosses under NH Route 11, approximately 1.5 miles west of the Spaulding Turnpike.

The existing culvert was reviewed by NHDOT Bureau of Bridge Design in 2011 and was given a "red list" rating due to the crossing being considered structurally deficient caused by the significant deterioration of the culvert's invert. The deterioration of the culvert is beyond the point where maintenance is a feasible alternative. Therefore, replacement has been deemed necessary in order to keep the integrity of NH Route 11 safe for the travelling public.

All wetland impacts are created from the replacement of the existing structure.

2. That the alternative proposed by the applicant is the one with the least impact to wetlands or surface waters on site.

Based on the NH Stream Crossing Rules a 21' span replacement structure is recommended. Placement of this sized structure, which is three times greater in size than the existing, would have large wetland and bank impacts. Additionally there is a historic stone culvert (1859) that crosses under an old railroad embankment, approximately 900-feet downstream from the project culvert. Increasing the project structure to the recommeneded stream crossing size would increase flow to this downstream (5.5' x 6') historic structure, potentially negatively impacting it. Also, there is another cross pipe under NH Route 11, 48" RCP, just upstream of the stone arch railroad culvert and about 850-feet downstream of the project structure that acts as a backwater system. If a full span replacement was installed, this area would likely be at a higher risk of flooding NH Route 11 due to the increased hydraulic capacity at the project crossing, but constricted flow downstream due to the historic culvert.

The proposed alternative is a 103"w x 71"h x 70-foot long polymer coated corrugated metal arch pipe. This culvert will be placed 5-feet east of the existing culvert. Additionally, a 36" RCP wildlife crossing structure will be installed parallel to the project crossing at the existing culvert location. The wildlife crossing will be placed at an elevation 3-feet higher than the project crossing to allow wildlife passage in a dry condition for the majority of storm events.

The combination of the arch pipe culvert and the 36" wildlife crossing pipe is the prefered alternative due to its ability to minimize environmental impacts to the maximum extent practicable and is the most economically feasible.

3. The type and classification of the wetlands involved.

Riverine, Lower Perennial, Unconsolidated Bottom, Cobble-Gravel and Sand (R2UB12)

Palustrine Scrub-Shrub Broad-leaved Deciduous, Seasonally Flooded/Saturated (PSS1E)

Bank

4. The relationship of the proposed wetlands to be impacted relative to nearby wetlands and surface waters.

The wetlands impacted primarily involve the streambed and assosicated banks of the unnamed stream flowing under NH Route 11. Impacts associated with this project will not negatively affect nearby wetlands and surface waters. Drainage patterns will be maintained and it is not expected that hydrology will change.

5. The rarity of the wetland, surface water, sand dunes, or tidal buffer zone area.

The impacted and nearby wetlands are not rare or uncommon in NH. Riverine and Palustrine Scrub-Shrub wetlands are common in NH.

6. The surface area of the wetlands that will be impacted.

Bank - 265 s.f. permanent; 377 s.f. bank temporary

Riverine - 1153 s.f. permanent; 223 s.f. temporary

Palustrian Shrub-Scrub - 0 s.f. permanent; 37 s.f. temporary

7. The impact on plants, fish and wildlife including, but not limited to:
   a. Rare, special concern species;
   b. State and federally listed threatened and endangered species;
   c. Species at the extremities of their ranges;
   d. Migratory fish and wildlife;
   e. Exemplary natural communities identified by the DRED-NHB; and
   f. Vernal pools.

a) No rare or special concern species were identified within the proposed project area.

b) There were no State or Federally listed threatened or endangered species identified within the project limits through the NHB search. However through a US Fish and Wildlife Service IPaC review a hit for the Northern Long Eared Bat and Small whorled pogonia came up.

As for the Northern Long Eared Bat (NLEB), tree clearing will be limited to winter time clearing. Coordination on the Northern Long Eared Bat was done through the U.S. Fish and Wildlife Service. The project as proposed is within the scope and adheres to the criteria of the FHWA, FRA, FTA Programmatic Consultation, including the implementation of applicable avoidance and minimization measures, and is not likely to adversely affect (NLAA) the threatened Northern Long-Eared Bat.

The small whorled pogonia was not observed during the two wetland field visits to the project site. The project impact area was dominated by hydrophitic vegetation (both herb and shrub/tree layer) and did not show any signs of the dryer covered habitat that small whorled pogonia frequents. It is our determination that it is highly unlikely that Small whorled pogonia is within the project imapct area.

c.) There are no species known to be at the extremities of their ranges located in the project area or the surrounding area.

d) Migratory fish and wildlife will be protected under the direction of NH Fish and Game.

e) The Department has coordinated with DRED and the results of the NHB review revealed no records in this area.

f) There were no vernal pools identified and/or delineated in the project area.

8. The impact of the proposed project on public commerce, navigation and recreation.

The improved crossing under NH Route 11 will continue to be maintained and public commerce and mobility will continue.

9. The extent to which a project interferes with the aesthetic interests of the general public. For example, where an applicant proposes the construction of a retaining wall on the bank of a lake, the applicant shall be required to indicate the type of material to be used and the effect of the construction of the wall on the view of other users of the lake.

This project does not interfere with the aesthetic interest of the general public. The work is along and within an existing transportation corridor and does not involve the application of atypical construction methods/techniques. The culvert is located in a rural forested area adjacent to commercial property.

10. The extent to which a project interferes with or obstructs public rights of passage or access. For example, where the applicant proposes to construct a dock in a narrow channel, the applicant shall be required to document the extent to which the dock would block or interfere with the passage through this area.

As noted in #8, no impacts. This project will be constructed within the existing ROW.

11. The impact upon abutting owners pursuant to RSA 482-A:11, II. For example, if an applicant is proposing to rip-rap a stream, the applicant shall be required to document the effect of such work on upstream and downstream abutting properties.

The project will complete all work within existing ROW limits. Disturbed streambed and bank areas will be stabilized with stone to minimize stream erosion. (Rip rapped banks down to the elevation of highwater will have humus applied and seeded.) The former channel will be maintained with a new 36" RCP wildlife crossing placed along the existing culvert's alignment.

12. The benefit of a project to the health, safety, and well being of the general public.

The project will perpetuate the safety of NH Route 11 at this location by improving the structural integrity of the crossing under the roadway. Additionally the increased cross sectional culvert area will improve water passage. The proposed wildlife crossing will improve wildlife movement through the project area.

13. The impact of a proposed project on quantity or quality of surface and groundwater. For example, where an applicant proposes to fill wetlands the applicant shall be required to document the impact of the proposed fill on the amount of drainage entering the site versus the amount of drainage exiting the site and the difference in the quality of water entering and exiting the site.

This project should result in reduced bank erosion and improved sediment transport as a result of providing a greater cross sectional area. The proposed design will also not alter the current quantity and quality of the surface water or groundwater enter the system because the proposed work will not increase the amount of impervious surface within the project area. In addition, the proposed layout will aid in accommodating a clean water bypass during construction as the existing culvert will be used to carry water during construction of the replacement culvert 5-feet east of the existing. Once the project culvert is constructed, the new culvert will carry the water while the new 36" rcp wildlife crossing is constructed.

14. The potential of a proposed project to cause or increase flooding, erosion, or sedimentation.

The design will not cause or increase flooding, erosion, or sedimentation. The proposed design was designed with the intention to reduce the risk of flooding and overtopping of the roadway. This larger 103"w x 71"h culvert opening will be less restrictive than the existing 7'w x 5'h culvert. Additionally the headwalls installed at both the inlet and outlet will protect the banks. Distrubed bank and channel areas will be stabilized with geotextile material and stone; fill areas will receive humus and will be re-seeded.

15. The extent to which a project that is located in surface waters reflects or redirects current or wave energy which might cause damage or hazards.

The proposd work is to shift the unnamed river's channel 5-feet east of the current location at the same alignment (perpendicular to the roadway). This preferred alternative was made based on the low road cover constricting/limiting the size and type of replacement structure as well as the downstream flow constraints and the desire to construct a wildlife crossing . The proposed headwalls and reconstructed banks will not cause currents or wave energy that will erode or cause sedimentation issues within the new channel. The unnamed river will flow through the new channel and banks the same way it currently does through the existing course and structure.

16. The cumulative impact that would result if all parties owning or abutting a portion of the affected wetland or wetland complex were also permitted alterations to the wetland proportional to the extent of their property rights. For example, an applicant who owns only a portion of a wetland shall document the applicant's percentage of ownership of that wetland and the percentage of that ownership that would be impacted.

N/A. The abutters would not be constructing a similar highway design project. There are no cumulative impacts expected from this culvert replacement project that would impact abutters. Design of this crossing minimizes adverse impacts while improving road safety and hydraulic capacity.

17. The impact of the proposed project on the values and functions of the total wetland or wetland complex.

The proposed work was designed to minimize the imapcts to wetlands to the maximum extent practicable. The remaining wetland systems will continue to serve the functions and values they do today. Due to the 5-foot offset of the proposed culvert from existing, approximately 450-sf of new channel and banks combined area will be created at the outlet. Wildlife passage will be improved as well as a result of this replacement.

18. The impact upon the value of the sites included in the latest published edition of the National Register of Natural Landmarks, or sites eligible for such publication.

This project is not located in or near any of the following Natural Register of Natural Landmarks listed on the National Register: Lake Umbagog East Inlet and Floating Island, Pondicherry Wildlife Refuge, Franconia Notch, Nancy Brook Scenic Area, Heath Pond Bog, Madison Boulder, White Lake Pitch Pine Forest, Mount Monadnock, Rhododendron Natural Area, and Spruce Hole Bog.

19. The impact upon the value of areas named in acts of Congress or presidential proclamations as national rivers, national wilderness areas, national lakeshores, and such areas as may be established under federal, state, or municipal laws for similar and related purposes such as estuarine and marine sanctuaries.

The project is not located in or near any of the above mentioned protected area.

20. The degree to which a project redirects water from one watershed to another.

This project will not redirect water from one watershed to another.

Additional comments

BUREAU OF ENVIRONMENT
CONFERENCE REPORT

SUBJECT: NHDOT Monthly Natural Resource Agency Coordination Meeting
DATE OF CONFERENCE: December 21, 2016
LOCATION OF CONFERENCE: John O. Morton Building
ATTENDED BY:

NHDOT
Matt Urban
Sarah Large
Randy Talon
Mark Kirouac
Caleb Dobbins
Mark Hemmerlein
Anthony Weatherbee
Steve Johnson
Leah Savage
Kirk Mudgett
Sally Gunn

EPA
Mark Kern

NHDES
Gino Infascelli
Lori Sommer

NH Fish & Game
Carol Henderson
Jim Oehler

NH Natural Heritage Bureau
Amy Lamb

Consultants/Public Participants

(When viewing these minutes online, click on an attendee to send an e-mail)

PRESENTATIONS/ PROJECTS REVIEWED THIS MONTH:
(minutes on subsequent pages)

Finalization of June 15th and October 19th 2016 Meeting Minutes 2
Off Highway Recreational Vehicle (OHRV) Connector Trails in NHDOT Right Of Way (ROW) .. 2
Rochester 21832 3
Easton 139/148 (Non-Federal) 4
Westmoreland 113/163 (Non-Federal) 5
Westmoreland 159/125 (Non-Federal) 6
Hampton Falls #40503 (Non-Federal) 6

(When viewing these minutes online, click on a project to zoom to the minutes for that project

Question: Are the coarse and fine filters in RSA 215-A:43 for environmental issues?
Answer: Yes. There are additional criteria that are related to environmental issues.

Question: Are there no exemplary communities on NHDOT parcels.
Answer: Yes, but exemplary communities do not compose greater than 90% any of NHDOT parcels.

Question: Are the only items exempted in RSA 235:56 the fine and coarse filters in RSA 215-A:43 and not the related environmental RSAs?
Answer: Yes, related environmental RSAs are not exempted.

Question: Is the Environmental Checklist on-line?
Answer: Yes, the final version will be on NHDOT Bureau of Highway Maintenance internet webpage.

Question: Is the NHDOT declaratory ruling just for OHRV crossings?
Answer: Yes.

Question: What is the specification for gravel beyond the paved approach apron for OHRV crossings?
Answer: The gravel specification is Item 304.3 from the NHDOT Standard Specifications for Road and Bridge Construction

NHDOT requests Natural Resource Agency feedback by January 27, 2017. Information requested include: any issues and concerns pertaining to permitting of OHRV connector trails, and agency contact name, telephone number, and email information.

This project has not been previously discussed at a Monthly Natural Resource Agency Coordination Meeting.

Rochester 21832

This project involves replacement of a 5ft x 7ft x 82" metal plate arch pipe which carries an unnamed brook under NH Route 11 in Rochester. A number of options were reviewed including; a fully compatible stream crossing 22' span bridge, box culverts, and twin 72" pipes. Skewing the pipes/boxes was also considered. After reviewing the cover requirements, wetland impacts, flood history, and the concerns regarding the increased hydraulic capacity if a fully compliant structure was constructed and the implication on the downstream historical stone arch structure the Department is proposing an in kind replacement. This preferred alternative, with a slight southerly shift, is more cost effective, keeps the inverts at the same elevations and would aid in construction as the current structure could function as a clean water by-pass. Mark Kern asked if the project team had considered replacing the arch with a concrete box in the same orientation and location as the present pipe. Leah Savage explained that the cost of the box and the cover constraints at this location eliminated this option from the alternatives. Lori Sommer asked how much cover was needed. L. Savage responded that a foot of header for the box or the thickness of the concrete header would be needed which there is not that much clearance with the road at this site. Kirk

Mudgett added that they could embed the box into the stream, but that would have added impacts to the channel. L Sommer as well as others asked about including a wildlife passage shelf inside the pipe. Matt Urban asked if they planned to back fill the old existing pipe? He suggested that if it wasn't filled it could be used for critter passage but also mentioned there could be opening to length ratio concerns. M. Urban also added that having another pipe next to the replacement could cause flooding issues down stream as it would be increasing the hydraulic capacity at this location. Mark Hemmerlein added that the stream does not run very often. Gino Infacelli added that the no name stream appeared to be barely perennial. He also provided a suitability chart. The Department agreed to look into include a small animal crossing shelf inside the pipe with appropriated platforms on the ends. Carol Henderson stated that some sort of shelf would be preferable and she liked the idea of the box culvert. Sally Gunn asked how a critter shelf would affect hydrology, the structures integrity, and the probability of it catching debris. G. Infascelli stated that it would be minimal. M. Urban added that a critter shelf would likely be installed above the ohw line. Amy Lamb noted there were wood turtles within the area and that an NHB search needs to be done. C. Henderson noted that this project was within the Designated Cocheco River system. S. Gunn reiterated that the Department will review the wildlife shelf within an in kind replacement and proceed to permitting the project.

This project has not been previously discussed at a Monthly Natural Resource Agency Coordination Meeting.

Easton 139/148 (Non-Federal)

Tony Weatherbee provided an overview of the project. The project involves the rehabilitation of the bridge that carries Route 116 over Ham Branch (139/148). Bridge Maintenance plans to replace the deck and widen the substructure. The existing structure is a concrete rigid bridge that has a span of 25'-0" and a width of 24'-0". The proposed work consists of the following: place sandbag cofferedams and temporary scaffolding, replace the deck, face the concrete abutments, construct wingwalls, and place riprap. Bridge Maintenance proposes to remove the "flying" wing on the upstream side and construct a new one and address the falling apart rip rap there.

Matt Urban asked if the extension of the deck would be on the existing wings? Tony responded yes, and that the new wing on the upstream side will extend out into the current rip rap. Tony then explained that they will need to construct a U-back wingwall on the other upstream side wing due to the road extension.

Tony added that the concrete rail will need to be brought to a historical resources meeting at a later time.

Tony then moved onto the downstream side of the structure. He explained there was no existing rip rap on this side however there is some erosion along one of the banks that Bridge Maintenance would like to armor.

Tony and Steve Johnson explained that one of the reasons for choosing to widen the bridge was so that they can do phase construction because closing the road would create an extensive detour. Steve also mentioned that widening the road in through this location is good so that plows have the full width they need.

Urban, Matt

From: Henderson, Carol
Sent: Thursday, January 19, 2017 1:24 PM
To: Urban, Matt
Subject: RE: Rochester, 21832

Hi Matt:

Sorry for the delay but I was out a couple of days from illness. Sorry I missed yesterday's meeting. Did I miss anything important that you would like me to be aware? Just let me know. I touched base with Mike M. and Kim T. about the Rochester project and we concur that the project as proposed is sufficient. Obviously, the box culvert would be our preference if possible, but the proposal is still an improvement for wildlife passage from the crushed, existing culvert. Thanks for reaching out to us. again, sorry for the delay. Thanks, Carol

P.S. Hey did you ever check to see if there was a traffic study conducted in Newbury in 2015 or 2016? Please let me know.

From: Urban, Matt
Sent: Friday, January 13, 2017 8:00 AM
To: Henderson, Carol
Cc: Hemmerlein, Mark; Savage, Leah; Gunn, Sally
Subject: RE: Rochester, 21832

Hi Carol.

I just wanted to follow up on this email so we can give our design team some direction.
I suspect you may still be coordinating internally before responding.

Looking forward to hearing back from you.

Thanks again,
Matt

From: Urban, Matt
Sent: Monday, January 09, 2017 10:13 AM
To: Henderson, Carol
Cc: Hemmerlein, Mark; Savage, Leah; Gunn, Sally
Subject: Rochester, 21832

Hi Carol,

I wanted to touch base with you regarding a project that we reviewed at last month's Natural Resource Agency meeting. Specifically, the Rochester 21832 project. (I have attached the draft minutes to help refresh your memory.)

Ultimately, we need to replace an existing squash pipe that is failing due to a rusted invert.

We have been considering several options/alternatives at this site and we trying to narrow in on one in particular and we wanted to touch base with you to get F&G's thoughts before pursuing it much further.

At this time Design is leaning towards replacement/slight upgrade of the existing 60"x 84" squash pipe with a 71" x 103" squash pipe. The replacement pipe will be constructed to the right of the existing structure so that the existing structure will serve as a clean water bypass during construction. Once the new pipe is in place the old one will be removed and we would partially fill the excavated area and then place a 36" x 70' long RCP pipe to serve as a critter crossing as well as an emergency overflow pipe should there be any large storms like the Mother's day floods.

I know at the resource meeting you had expressed a preference for a box with a formalized wildlife bench be that made of concrete or one of the proprietary metal benches. However, the costs are looking to be approximately 4 times as much. As such our Design team is leaning towards the alternative I have described above and we want to make sure that it is not a show stopper for F&G.

Please let us know your thoughts, and ultimately if you think we should or should not pursue this as a potential preferred alternative that we move forward with.

Thank you for your considerations.

Matt Urban
Wetlands Program Manager
NHDOT Bureau of Environment

Rochester 21832

Mitigation Narrative

The Department is proposing to replace an existing 5'x7' Arch CMP with a 103"x 71" polymer coated corrugated metal arch pipe located approximately 5' east of the existing culvert. When the replacement structure is completed the existing structure will be removed and a 3' diameter pipe will be installed in its place to serve as a wildlife passage and emergency overflow pipe. The Department is proposing a single one-time payment into the arm fund in the amount of $23,278.80 The Department met with NHDES on 6/2/2017 in the DES lobby. At that meeting we discussed the proposed impacts at the outlet which consisted of 12 LF of impact to Bank Left and 25 LF of impact to the existing Channel and Bank Right. We then compared those impacts with the proposed new channel and bank creation that will be established as a result of the new alignment of the larger structure. In comparison we determined this will result in 25LF of new channel and 40LF of new bank. We discussed how we will propose to vegetate the new bank and provide a few plantings as well. The total LF of new channel and bank combined at the outlet is 65 LF. It was determined that this mitigates the other impacts which only had a total cumulative total of 37 LF of the existing stream and banks. We also proposed to apply the remaining 28LF from the created stream and bank impacts as a deduction for a 28 LF segment of bank on the inlet side.

That said, the Department is proposing to mitigate for 15 LF of bank left, 55 LF of channel, and 25LF of bank right. Using the Arm-Fund calculator this equates to a total of $23,278.80

DES AQUATIC RESOURCE MITIGATION FUND
STREAM PAYMENT CALCULATION
Rochester 21832

INSERT LINEAR FEET OF IMPACT on BOTH BANKS AND CHANNEL	Right Bank	25.00
	Left Bank	15.0000
	Channel	55.0000
	TOTAL IMPACT	95.0000
	Stream Impact Cost:	$19,399.00
	DES Administrative cost:	
		$3,879.80
********* TOTAL ARM FUND STREAM PAYMENT********		
		$23,278.80

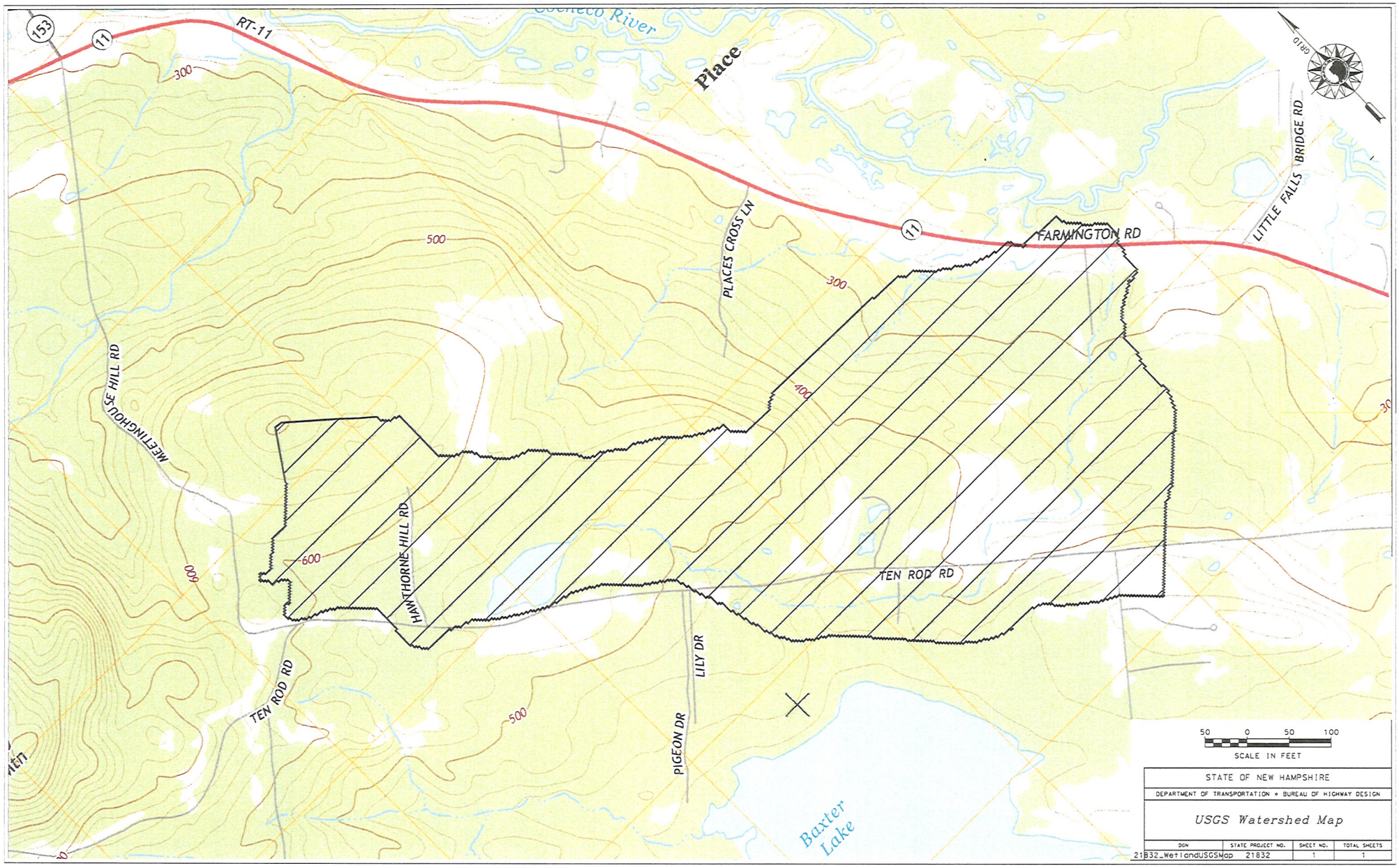

832_WetlandUSGSMap.dgn Default 3/9/2017 1:42:45 PM "n34lms"

NH Department of Transportation
Bureau of Highway Design
Project, #21832 - Rochester
Env-Wt 904.09 Alternative Design
TECHNICAL REPORT

Env-Wt 904.09(a) - If the applicant believes that installing the structure specified in the applicable rule is not practicable, the applicant may propose an alternative design in accordance with this section.

Please explain why the structure specified in the applicable rule is not practicable (Env-Wt 101.69 defines practicable as *available and capable of being done after taking into consideration costs, existing technology, and logistics in light of overall project purposes.)*

7'w x 5'h arch cmp culvert (alternatives analysis):

The NH Stream Crossing Guidelines recommend an open-bottom structure that is 1.2 times bankfull width plus 2-feet. Based on watershed size, the NH Regional Geometry Curves estimate a bankfull width of 15.66-feet at this stream crossing, translating into a recommended span of 21 feet. The channel is 7-feet below the roadway leaving very little cover over any proposed structure, limiting the size and type of replacement structure. The construction of a 21-foot wide box culvert or span structure would mean the need for extensive temporary roadway construction. Upsizing this culvert to a bridge would also mean increasing the flow of water to the downstream historic railroad culvert, a 5.5'w x 6'h stone arch. This increase would result in an Adverse Effect under Section 106 and trigger the need for historic mitigation. The construction of the 21-foot span bridge at this location would cost approximately $1.1 million. The construction of a 9'w x 5'h concrete box culvert with 2' natural embedment and a wildlife shelf would cost approximately $700,000. The cost of a 103"w x 71"h Polymer Coated Corrugated Metal Arch Pipe with a separate wildlife culvert would cost approximately $400,000.

The proposed alternative meets the specific design criteria for Tier 2 and Tier 3 crossings to the *maximum extent practicable*, as specified below.

Env-Wt 904.05 Design Criteria for Tier 2 and Tier 3 Stream Crossings – New Tier 2 stream crossings, replacement Tier 2 crossings that do not meet the requirements of Env-Wt 904.07, and new and replacement Tier 3 crossings shall be designed and constructed:

(a) In accordance with the NH Stream Crossing Guidelines.

As described above, the structure size recommended by the NH Stream Crossing Guidelines is not practicable given the limited funding that is available, construction limitations, and other constraints due to resources in the area.

Due to the low cover over the roadway, the existing elevation at the inlet (242.58) and outlet (241.92) will be lowered to the proposed elevations of: inlet (241.25) and outlet (240.65). The proposed pipe will be shortened from 82-feet (existing) to 70-feet (proposed) and the pipe's proposed slope will match the existing 0.8%. Headwalls will be installed at the inlet and outlet to improve hydraulics through the crossing and lower head loss and erosion.

(b) With bed forms and streambed characteristics necessary to cause water depths and velocities within the crossing structure at a variety of flows to be comparable to those found in the natural channel upstream and downstream of the stream crossing.

The proposed culvert will maintain the existing pipe's slope of 0.8%. Upstream of the culvert, the stream runs approximately 5% and downstream is sloped approximately 1%. Through modeling the system in HydroCad, the existing conditions for the 50-year design storm shows velocities of 14.24 fps and headwater elevation of 256.40-feet. In the proposed condition, the model shows a velocity reduction (8.61 fps) and reduction in headwater elevation (247.80-feet). This reduction is due to increasing the size of the culvert and installation of headwalls at the inlet and outlet.

(c) To provide a vegetated bank on both sides of the watercourse to allow for wildlife passage.

Any temporary bank disturbance shall be returned to a vegetative state after construction. A wildlife crossing will be installed parallel to the project's proposed culvert, at the location of the exiting crossing. The wildlife crossing will be a 36" RCP and will allow critters and wildlife to cross under NH Route 11.

(d) To preserve the natural alignment and gradient of the stream channel, so as to accommodate natural flow regimes and the functioning of the natural floodplain.

The proposed culvert will be installed approximately 5-feet east of the existing crossing and at the same alignment, perpendicular to the roadway. This will improve the alignment of the stream, while adding an area of additional wetlands at the outlet.

(e) To accommodate the 100-year frequency flood, to ensure that (1) there is no increase in flood stages on abutting properties; and (2) flow and sediment transport characteristics will not be affected in a manner which could adversely affect channel stability.

(1) When modeled, the proposed culvert under the 100 yr flow of 477 cfs in HydroCad has a headwater elevation that is approximately 0.25-ft above the top of roadway elevation. This is an improvement from the existing condition as the existing model shows the headwater depth to be 14.2 ft above the top of roadway elevation.

There is low cover over the culvert and the top of roadway elevation (249.8) is only 2.0 feet above the crown of the culvert. History has shown that the existing culvert has only overtopped the roadway during the anomaly events of the Mother's Day and Patriot's Day floods. Therefore history would show that the proposed culvert of increased capacity would have improved results.

(2) Just upstream of the stone arch railroad culvert and about 850-feet downstream from the NH Route 11 project crossing, a significant backwater condition exists from the Cocheco River. The proposed design increases our project culvert area by approximately 16 sf. This increase will improve hydraulics through our project culvert while also balancing the need to not negatively impact the downstream backwater condition or the historical (1859) stone arch culvert.

The proposed culvert slope is the same as the existing 0.8% culvert slope.

(f) To simulate a natural stream channel.

The proposed treatment does not meet this design criteria. The existing culvert did not either.

(g) So as not to alter sediment transport competence.

Sediment can still be transported similar to the existing condition, see (e) (2).

Env-Wt 904.09(c)(3) – The alternative design must meet the general design criteria specified in Env-Wt 904.01:

Env-Wt 904.01

(a) Not be a barrier to sediment transport;

Sediment can still be transported similar to the existing condition, see (e) (2).

(b) Prevent the restriction of high flows and maintain existing low flows;

Flows are not adversely affected, see (e) (1).

(c) Not obstruct or otherwise substantially disrupt the movement of aquatic life indigenous to the waterbody beyond the actual duration of construction;

The proposed polymer coated corrugated metal pipe has a roughness value of 0.025. The existing roughness value was 0.028. This roughness and the corrugation of the pipe will allow travel of footed creatures at low flow, similar to the existing condition of the galvanized corrugated metal pipe. Slopes of the pipes are not changing, and therefore not making travel any more difficult for the critters. At the inlet and outlet straight concrete headwalls will be constructed to improve hydraulics and reduce head loss through the crossing.

Additionally a wildlife crossing will be installed parallel to the project's proposed culvert, at the location of the existing crossing. This wildlife crossing will be a 36" RCP that is placed at an elevation 3-feet higher than the project culvert. This will allow the pipe to operate in a dry condition for the majority of storm events. This proposed design will improve aquatic life passage from the existing condition.

(d) Not cause an increase in the frequency of flooding or overtopping of banks;

The hydraulic model of the existing culvert shows the road overtopping at the 25 year storm event. The hydraulic model of the proposed culvert shows an improvement as the road is shown to not overtop until the 100 year storm event by approximately 3-inches. See (e) (1).

(e) Preserve watercourse connectivity where it currently exists;

The proposed polymer coated metal arch pipe will be offset to the east of the existing culvert by 5-feet and at the same alignment as existing. The culvert offset allows for the existing culvert to be used as clean water bypass during construction. This installation will result in wetland, channel, and bank impacts at the inlet and creation of new channel and banks at the outlet. After the project culvert is constructed, the wildlife crossing will be installed at the same location as the existing metal arch.

(f) Restore watercourse connectivity where: (1) Connectivity previously was disrupted as a result of human activity(ies); and (2) Restoration of connectivity will benefit aquatic life upstream or downstream of the crossing, or both;

Watercourse connectivity will not be disrupted. The new culvert alignment will improve connectivity.

(g) Not cause erosion, aggradation, or scouring upstream or downstream of the crossing; and

Erosion, aggradation, and scour conditions will not be changed from the existing condition, see (e) (2).

The proposed crossing will have headwalls at both the inlet and outlet, which will protect the crossing infrastructure from erosion or scouring caused by the carried waters. Through modeling the system in HydroCad, the existing conditions for the 50-year design storm show a reduction in velocities (5.6 fps) and a reduction in headwater elevations (8.5-feet) therefore there will be an improvement to the existing erosion, aggradation, and scour conditions. No barriers to sediment transport are being installed as part of the proposed work.

(h) Not cause water quality degradation.

This treatment will not cause water quality degradation. The proposed polymer coated metal arch pipe will be offset upstream form the existing culvert by 5-feet and at the same alignment as the existing. The culvert offset allows for the existing culvert to be used as clean water bypass during construction.

*****Note: An alternative design for <u>Tier 1</u> stream crossings must meet the general design criteria (Env-Wt 904.01) only to the *maximum extent practicable.***

New Hampshire Natural Heritage Bureau

To: Sarah Large
7 Hazen Drive
Concord, NH 03301

Date: 5/31/2017

From: NH Natural Heritage Bureau

Re: Review by NH Natural Heritage Bureau of request dated 5/31/2017

NHB File ID: NHB17-1659

Applicant: Sarah Large

Location: Tax Map(s)/Lot(s):
Rochester

Project Description: Stream crossing replacement and wildlife shelf installment at a stream crossing to the southeast of Tractor Supply Co that runs perpendicularly across/ under NH Route 11.

The NH Natural Heritage database has been checked for records of rare species and exemplary natural communities near the area mapped below. The species considered include those listed as Threatened or Endangered by either the state of New Hampshire or the federal government. We currently have no recorded occurrences for sensitive species near this project area.

A negative result (no record in our database) does not mean that a sensitive species is not present. Our data can only tell you of known occurrences, based on information gathered by qualified biologists and reported to our office. However, many areas have never been surveyed, or have only been surveyed for certain species. An on-site survey would provide better information on what species and communities are indeed present.

This report is valid through 5/30/2018.

Department of Resources and Economic Development
Division of Forests and Lands
(603) 271-2214 fax: 271-6488

DRED/NHB
172 Pembroke Road
Concord NH 03301

MAP OF PROJECT BOUNDARIES FOR NHB FILE ID: NHB17-1659

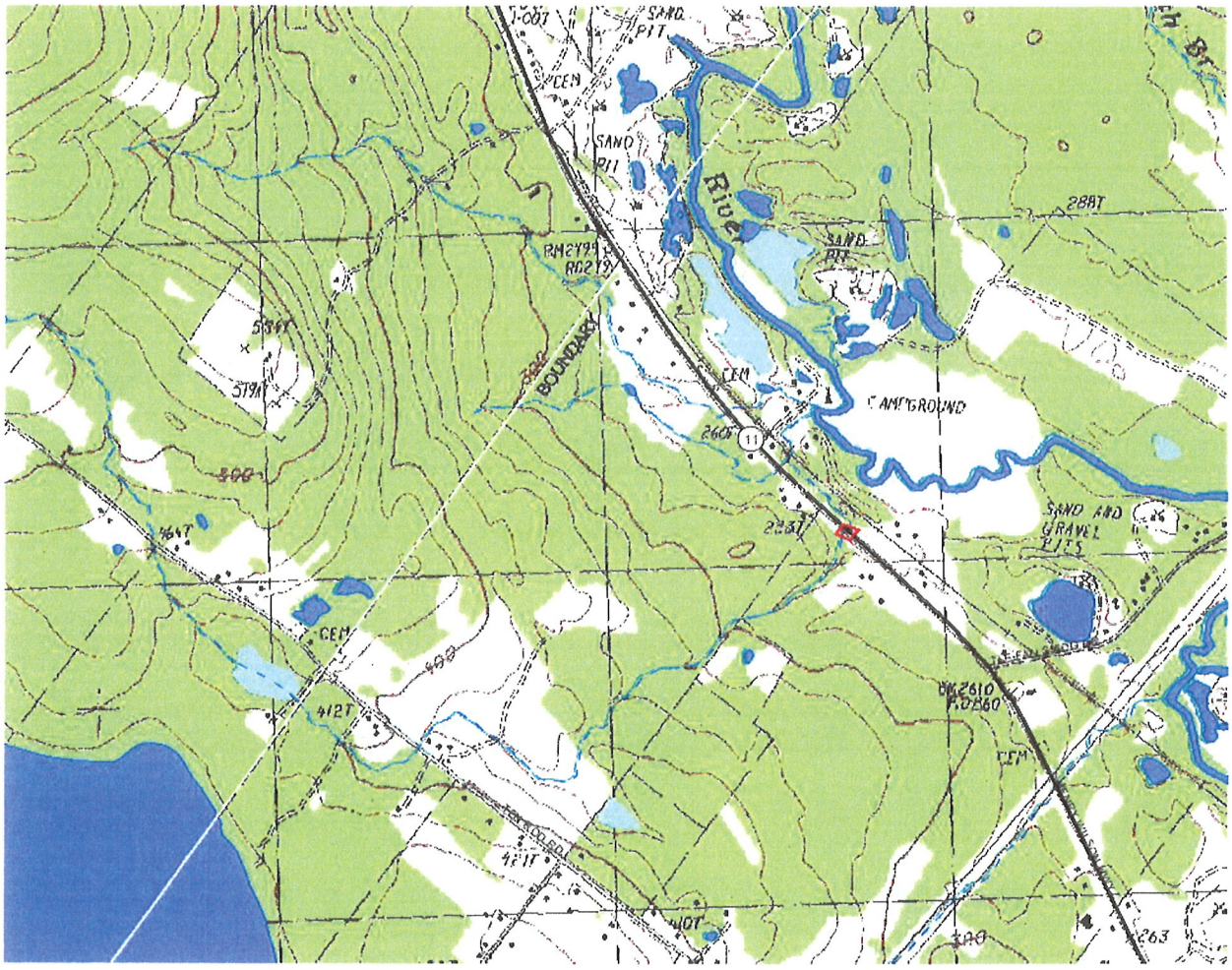

Department of Resources and Economic Development
Division of Forests and Lands
(603) 271-2214 fax: 271-6488

DRED/NHB
172 Pembroke Road
Concord NH 03301

United States Department of the Interior

FISH AND WILDLIFE SERVICE
New England Ecological Services Field Office
70 Commercial Street, Suite 300
Concord, NH 03301-5094
Phone: (603) 223-2541 Fax: (603) 223-0104
http://www.fws.gov/newengland

In Reply Refer To:
Consultation Code: 05E1NE00-2017-SLI-1326
Event Code: 05E1NE00-2017-E-02593
Project Name: Rochester 21832

April 17, 2017

Subject: List of threatened and endangered species that may occur in your proposed project location, and/or may be affected by your proposed project

To Whom It May Concern:

The enclosed species list identifies threatened, endangered, proposed and candidate species, as well as proposed and final designated critical habitat, that may occur within the boundary of your proposed project and/or may be affected by your proposed project. The species list fulfills the requirements of the U.S. Fish and Wildlife Service (Service) under section 7(c) of the Endangered Species Act (Act) of 1973, as amended (16 U.S.C. 1531 et seq.).

New information based on updated surveys, changes in the abundance and distribution of species, changed habitat conditions, or other factors could change this list. Please feel free to contact us if you need more current information or assistance regarding the potential impacts to federally proposed, listed, and candidate species and federally designated and proposed critical habitat. Please note that under 50 CFR 402.12(e) of the regulations implementing section 7 of the Act, the accuracy of this species list should be verified after 90 days. This verification can be completed formally or informally as desired. The Service recommends that verification be completed by visiting the ECOS-IPaC website at regular intervals during project planning and implementation for updates to species lists and information. An updated list may be requested through the ECOS-IPaC system by completing the same process used to receive the enclosed list.

The purpose of the Act is to provide a means whereby threatened and endangered species and the ecosystems upon which they depend may be conserved. Under sections 7(a)(1) and 7(a)(2) of the Act and its implementing regulations (50 CFR 402 et seq.), Federal agencies are required to utilize their authorities to carry out programs for the conservation of threatened and endangered species and to determine whether projects may affect threatened and endangered species and/or designated critical habitat.

A Biological Assessment is required for construction projects (or other undertakings having similar physical impacts) that are major Federal actions significantly affecting the quality of the

human environment as defined in the National Environmental Policy Act (42 U.S.C. 4332(2)(c)). For projects other than major construction activities, the Service suggests that a biological evaluation similar to a Biological Assessment be prepared to determine whether the project may affect listed or proposed species and/or designated or proposed critical habitat. Recommended contents of a Biological Assessment are described at 50 CFR 402.12.

If a Federal agency determines, based on the Biological Assessment or biological evaluation, that listed species and/or designated critical habitat may be affected by the proposed project, the agency is required to consult with the Service pursuant to 50 CFR 402. In addition, the Service recommends that candidate species, proposed species and proposed critical habitat be addressed within the consultation. More information on the regulations and procedures for section 7 consultation, including the role of permit or license applicants, can be found in the "Endangered Species Consultation Handbook" at:

http://www.fws.gov/endangered/esa-library/pdf/TOC-GLOS.PDF

Please be aware that bald and golden eagles are protected under the Bald and Golden Eagle Protection Act (16 U.S.C. 668 et seq.), and projects affecting these species may require development of an eagle conservation plan (http://www.fws.gov/windenergy/eagle_guidance.html). Additionally, wind energy projects should follow the wind energy guidelines (http://www.fws.gov/windenergy/) for minimizing impacts to migratory birds and bats.

Guidance for minimizing impacts to migratory birds for projects including communications towers (e.g., cellular, digital television, radio, and emergency broadcast) can be found at: http://www.fws.gov/migratorybirds/CurrentBirdIssues/Hazards/towers/towers.htm; http://www.towerkill.com; and http://www.fws.gov/migratorybirds/CurrentBirdIssues/Hazards/towers/comtow.html.

We appreciate your concern for threatened and endangered species. The Service encourages Federal agencies to include conservation of threatened and endangered species into their project planning to further the purposes of the Act. Please include the Consultation Tracking Number in the header of this letter with any request for consultation or correspondence about your project that you submit to our office.

Attachment(s):

- Official Species List

Official Species List

This list is provided pursuant to Section 7 of the Endangered Species Act, and fulfills the requirement for Federal agencies to "request of the Secretary of the Interior information whether any species which is listed or proposed to be listed may be present in the area of a proposed action".

This species list is provided by:

New England Ecological Services Field Office
70 Commercial Street, Suite 300
Concord, NH 03301-5094
(603) 223-2541

Project Summary

Consultation Code: 05E1NE00-2017-SLI-1326

Event Code: 05E1NE00-2017-E-02593

Project Name: Rochester 21832

Project Type: TRANSPORTATION

Project Description: Culvert Replacement NH Route 11
existing 7'w x 5' h arch cmp
proposed 103"w x 71"h polymer coated corrugated metal arch pipe 5' east of the existing culvert
36" RCP wildlife crossing in existing pipe location

Project Location:
Approximate location of the project can be viewed in Google Maps:
https://www.google.com/maps/place/43.33997205562488N71.01580571419535W

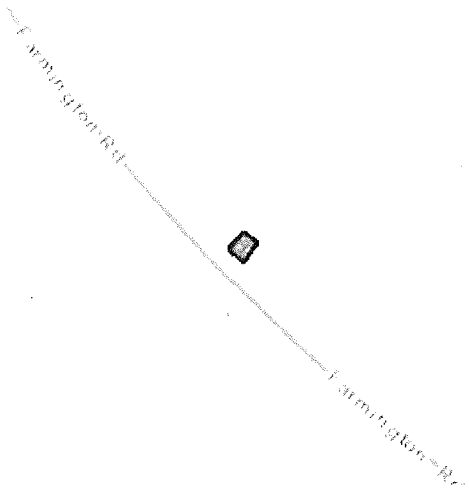

Counties: Strafford, NH

Endangered Species Act Species

There is a total of 2 threatened, endangered, or candidate species on your species list. Species on this list should be considered in an effects analysis for your project and could include species that exist in another geographic area. For example, certain fish may appear on the species list because a project could affect downstream species. See the "Critical habitats" section below for those critical habitats that lie wholly or partially within your project area. Please contact the designated FWS office if you have questions.

Mammals

NAME	STATUS
Northern Long-eared Bat *(Myotis septentrionalis)* No critical habitat has been designated for this species. Species profile: https://ecos.fws.gov/ecp/species/9045	Threatened

Flowering Plants

NAME	STATUS
Small Whorled Pogonia *(Isotria medeoloides)* No critical habitat has been designated for this species. Species profile: https://ecos.fws.gov/ecp/species/1890	Threatened

Critical habitats

There are no critical habitats within your project area.

New Hampshire Recordation of Bridges that Apply to the Program Comment for Common Post-1945 Concrete & Steel Bridges

Project Name:	Rochester		
State Number:	21832	**FHWA Number:**	X-A002(234)
Form Completed by: Email if not NHDOT staff:	Sheila Charles Click here to enter text.	**Date:**	4/28/2017

Town	Rochester	**NHDOT Bridge No.**	
Year Built (rebuilt)	1958/2008 wing wall	**Owner**	NHDOT
Road carrying	NH Route 11	**Over feature**	unnamed brook
Bridge/culvert Type	Arch concrete metal pipe	**Number of Spans**	
Length	70 ft	**Width**	5 ft X 7 ft high
Abutment style	Concrete/Stone	**Pier style**	
Rail Type		**Rail installation date:**	
Designer/Engineer (if known)		**Bridge Plaques or Engravings?**	
Reviewed by:	Sheila Charles NHDOT Cultural Resources Staff	Date Reviewed:	4/28/2017

Approved ☒ Not Approved ☐ Justification: Culvert replacement made of concrete & metal; not within boundary of historic property

RPR Number: _____ Reviewed under PA: 4/28/2017

Created March 27, 2014 Updated September 15, 2014

Section 106 Programmatic Agreement – Cultural Resources Review Effect Finding

Appendix B Certification – Projects with Minimal Potential to Cause Effects

Date Reviewed:	4/27/2017		
Project Name:	Rochester 21832		
State Number:	21832	**FHWA Number:**	X-A002(234)
Environmental Contact:	Matt Urban/ Mark Hemmerlein	**DOT**	
Email Address:	Mark.Hemmerlein@dot.nh.gov	**Project Manager:**	Tobey Reynolds
Project Description:	Replace existing 5' wide X 7' high (1958) arch concrete metal pipe with a 103" wide X 71" high polymer coated corrugated metal arch pipe, located @ 5' upstream from existing culvert location; a 36" RCP wildlife crossing will also be constructed parallel to the new setting at the existing culvert location.		

Please select the applicable undertaking type(s):

☐	1. Modernization and general highway maintenance **that may require additional highway right-of-way or easement**, and which is **not within the boundaries of a historic property or district,** including:
	Choose an item Choose an item.
☒	2. Non-historic bridge and culvert maintenance, renovation, or total replacement, **that may require minor additional right-of-way or easement**, and which is **not within the boundaries of a historic property or district**, including:
	a. replacement of maintenance of drainage pipes and culverts made of steel, plastic and concrete Choose an item.
☐	3. Historic bridge maintenance activities within the limits of existing right-of-way, including:
	Choose an item. Choose an item
☐	4. Stream stabilization and restoration activities (including removal of debris or sediment obstructing the natural waterway, or any non-invasive action to restore natural conditions).
☐	5. Construction of bicycle lanes and pedestrian walkways, sidewalks, shared-use paths and facilities, small passenger shelters, and alterations to facilities or vehicles in order to make them accessible for elderly and handicapped persons, **not within the boundaries of a historic property or district**.
☐	6. Installation of bicycle racks, **not within the boundaries of a historic property or district**.
☐	7. Recreational trail construction, **not within the boundaries of a historic property or district**.
☐	8. Recreational trail maintenance when done on existing alignment.
☐	9. Modernization, maintenance, and safety improvements of railroad facilities within the existing railroad or highway right-of-way, **not within the boundaries of a historic property or district, and no historic railroad features are impacted,** including, but not limited to:
	Choose an item. Choose an item
☐	10. Acquisition or renewal of scenic, conservation, habitat, or other land preservation easements
☐	11. Installation of Intelligent Transportation Systems.

Please describe how this project is applicable under Appendix B of the Programmatic Agreement.

Section 106 Programmatic Agreement – Cultural Resources Review Effect Finding

Appendix B Certification – Projects with Minimal Potential to Cause Effects

This proposed project qualifies for Appendix B, as the culvert falls under the Program Comment. The culvert was constructed in 1958, and a new concrete wing was installed in 2008.

NHDOT in-house projects: Please append photographs, USGS maps, design plans and as-built plans, if available, for review.

LPA projects: Please submit this Certification Form along with the Transportation RPR

Coordination Efforts:

Has an RPR been submitted to NHDOT for this project?	No	NHDHR R&C # assigned?	Click here to enter text.
Please identify public outreach effort contacts; method of outreach and date:	Letter of 10/28/2015 sent to abutter		

Finding: (To be filled out by NHDOT Cultural Resources Staff)

☐	**No Potential to Cause Effects**	☒	**No Historic Properties Affected**
This finding serves as the Section 106 Memorandum for your environmental documents, no further coordination is necessary.			
☐	This project does *not* comply with Appendix B, and will continue under the Section 106 review process outlined in 36 CFR 800.3-800.7. Please contact NHDOT Cultural Resources Staff to determine next steps.		
	NHDOT comments:		
	Sheila Charles NHDOT Cultural Resources Staff	4/27/2017 Date	

Coordination of the Section 106 process should begin as early as possible in the planning phase of the project (undertaking) so as not to cause a delay.

Project sponsors should not predetermine a Section 106 finding under the assumption that an undertaking conforms to the types listed in Appendix B until this form is signed by the NHDOT Bureau of Environment Cultural Resources Program staff.

Every project shall be coordinated with, and reviewed by the NHDOT-BOE Cultural Resources Program in accordance with the Cultural Resources Programmatic Agreement among the Advisory Council on Historic Preservation, Federal Highway Administration, NH Department of Transportation, and the State Historic Preservation Office. In accordance with the Advisory Council's regulations, we will continue to consult, as appropriate, as this project proceeds.

If any portion of the undertaking is not entirely limited to any one or a combination of the types specified in Appendix B (with, or without a portion that is included as a type listed in Appendix A), please continue discussions with NHDOT Cultural Resources staff.

This No Potential to Cause Effect or No Historic Properties Affected project determination is your Section 106 finding, as defined in the Programmatic Agreement.

Should project plans change, please inform the NHDOT Cultural Resources staff in accordance with Stipulation VII of the Programmatic Agreement.

NHDOT Bureau of Environment

CULTURAL RESOURCE SENSITIVITY REVIEW PROTOCOL

PROJECT NAME Rochester **STATE #** 21832 **FEDERAL #** X-A002(234)

LOCATION: NH RT 11

PROPOSAL: Replace existing 5' wide X 7' high (1958) arch concrete metal pipe with a 103" wide X 71" high polymer coated corrugated metal arch pipe, located @ 5' upstream from existing culvert location; a 36" RCP wildlife crossing will also be constructed parallel to the new setting at the existing culvert location

COUNTY Strafford **ENVIRONMENTAL PROJECT MANAGER** Mark Hemmerlein/Matt Urban

CULTURAL RESOURCE REVIEWER Sheila Charles **DATE** 4/27/2017

SOURCE	CULTURAL RESOURCE IN PROJECT AREA		TEMPLATE GENERAL DETAIL A negative result (no record in the NH database) does not mean that no archaeological site is present. Our data reflects known occurrences, and cartographic information reported to the NHDHR and DOT offices. However, many areas have never been surveyed. Ground truthing and further investigation would provide more accurate information on archaeological sensitivity.
	NO	YES	
Recorded Archaeological Site (as per NHDHR site database map)	X		Pre-Contact ☐ Post-Contact ☐ SITE #/NAME _____ LOCATION: _____
Nearest Recorded Archaeo Site (as per NHDHR site database map)	X		Pre-Contact ☒ Post-Contact ☐ SITE #/NAME 27-ST-0093 DETAIL Cocheco River Site DISTANCE FROM PROJECT AREA: 2.14 miles (3.44 km) southeast of project Pre-Contact ☐ Post-Contact ☐ SITE #/NAME _____ DETAIL _____ DISTANCE FROM PROJECT AREA: _____
Resource Listed or Eligible for NR or SR of Historic Places			Proposed project plans have been revised to avoid keystone arch stone masonry culvert for railroad, stone lined channel, railroad bed; Project calls for replacement of 1958 arch CMP
C. 1856_Chace MAP COUNTY- Strafford		X	Map Attached area ☒ Cocheco RR alignment and crossing east of project area, no other structures depicted nearby
1892 HURD MAP		X	Map Attached ☒ Boston & Maine RR Northern Division alignment and crossing east of project area, no other structures depicted nearby
USGS TOPO			Map Attached ☒
			☒ THIS DOCUMENT CONSTITUTES A NOTE TO FILE ☐ ASSOCIATED WITH RPR FORM SUBMITTAL TO NHDHR

Conclusion/ Recommendation:

Setting compromised by road and culvert construction;

This project qualifies under the Programmatic Agreement and Program Comment.

US Army Corps of Engineers
New England District

U.S. Army Corps of Engineers
New Hampshire Programmatic General Permit (PGP)
Appendix B - Corps Secondary Impacts Checklist
(for inland wetland/waterway fill projects in New Hampshire)

1. Attach any explanations to this checklist. Lack of information could delay a Corps permit determination.
2. All references to "work" include all work associated with the project construction and operation. Work includes filling, clearing, flooding, draining, excavation, dozing, stumping, etc.
3. See PGP, GC 5 regarding single and complete projects.
4. Contact the Corps at (978) 318-8832 with any questions.

1. Impaired Waters	Yes	No
1.1 Will any work occur within 1 mile upstream in the watershed of an impaired water? See http://des.nh.gov/organization/divisions/water/wmb/section401/impaired_waters.htm to determine if there is an impaired water in the vicinity of your work area.*	x	
2. Wetlands	Yes	No
2.1 Are there streams, brooks, rivers, ponds, or lakes within 200 feet of any proposed work?	x	
2.2 Are there proposed impacts to SAS, shellfish beds, special wetlands and vernal pools (see PGP, GC 26 and Appendix A)? Applicants may obtain information from the NH Department of Resources and Economic Development Natural Heritage Bureau (NHB) website, www.nhnaturalheritage.org, specifically the book Natural Community Systems of New Hampshire.		x
2.3 If wetland crossings are proposed, are they adequately designed to maintain hydrology, sediment transport & wildlife passage?	x	
2.4 Would the project remove part or all of a riparian buffer? (Riparian buffers are lands adjacent to streams where vegetation is strongly influenced by the presence of water. They are often thin lines of vegetation containing native grasses, flowers, shrubs and/or trees that line the stream banks. They are also called vegetated buffer zones.)	x	
2.5 The overall project site is more than 40 acres.		x
2.6 What is the size of the existing impervious surface area?	9020 sf	
2.7 What is the size of the proposed impervious surface area?	0 sf	
2.8 What is the % of the impervious area (new and existing) to the overall project site?	0%	
3. Wildlife	Yes	No
3.1 Has the NHB determined that there are known occurrences of rare species, exemplary natural communities, Federal and State threatened and endangered species and habitat, in the vicinity of the proposed project? (All projects require a NHB determination.)		x
3.2 Would work occur in any area identified as either "Highest Ranked Habitat in N.H." or "Highest Ranked Habitat in Ecological Region"? (These areas are colored magenta and green, respectively, on NH Fish and Game's map, "2010 Highest Ranked Wildlife Habitat by Ecological Condition.") Map information can be found at: • PDF: www.wildlife.state.nh.us/Wildlife/Wildlife_Plan/highest_ranking_habitat.htm. • Data Mapper: www.granit.unh.edu. • GIS: www.granit.unh.edu/data/downloadfreedata/category/databycategory.html.		x
3.3 Would the project impact more than 20 acres of an undeveloped land block (upland, wetland/waterway) on the entire project site and/or on an adjoining property(s)?		x
3.4 Does the project propose more than a 10-lot residential subdivision, or a commercial or industrial development?		x
3.5 Are stream crossings designed in accordance with the PGP, GC 21?	x	

4. Flooding/Floodplain Values	Yes	No
4.1 Is the proposed project within the 100-year floodplain of an adjacent river or stream?		x
4.2 If 4.1 is yes, will compensatory flood storage be provided if the project results in a loss of flood storage?		N/A
5. Historic/Archaeological Resources		
If a minor or major impact project, has a copy of the Request for Project Review (RPR) Form (www.nh.gov/nhdhr/review) been sent to the NH Division of Historical Resources as required on Page 5 of the PGP?**	x	

*Although this checklist utilizes state information, its submittal to the Corps is a Federal requirement.
** If project is not within Federal jurisdiction, coordination with NH DHR is not required under Federal law.

WETLAND PERMIT APPLICATION – PICTURES

Inlet of culvert facing upstream – 11/08/2016

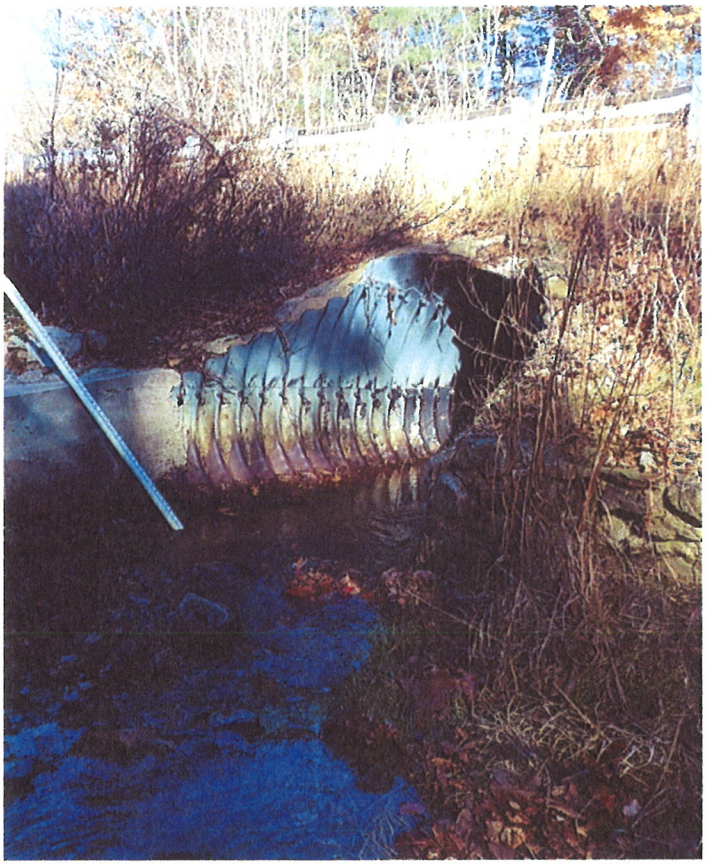

Inlet of culvert facing downstream – 11/08/2016

Inlet of pipe facing downstream left wing – 11/02/2012

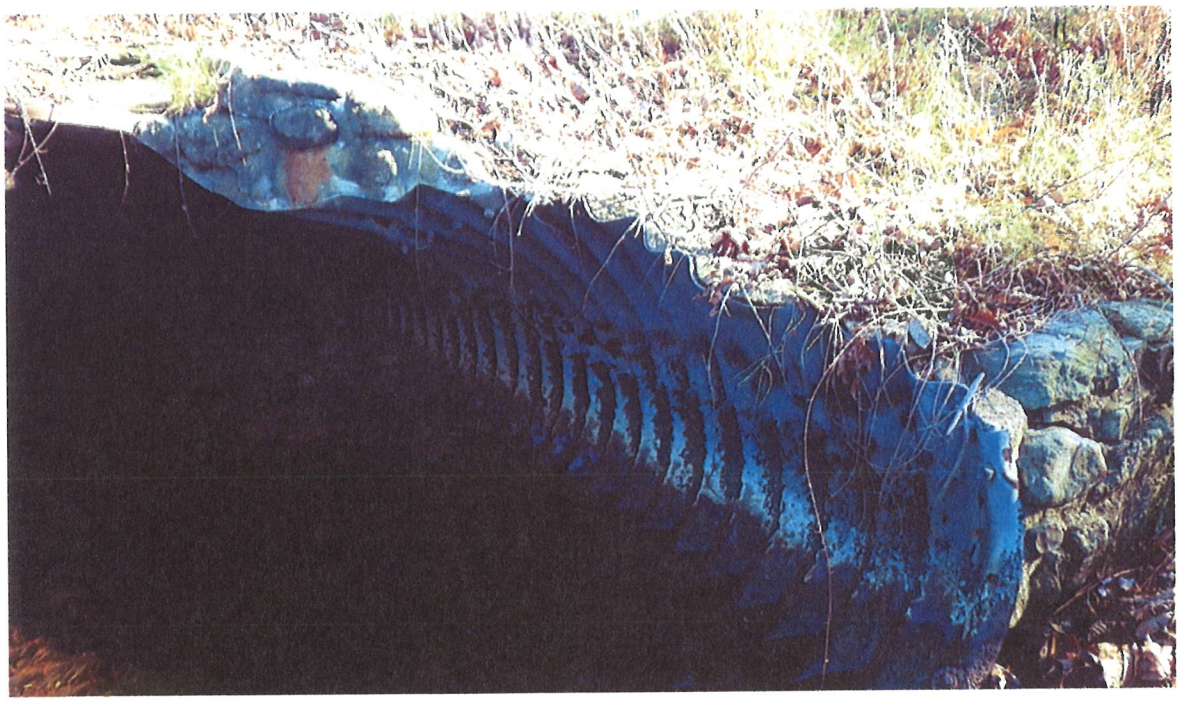

Inlet of pipe facing downstream right wing – 11/08/2016

Outlet of culvert facing upstream – 11/08/2016

Side Slope at Outlet – 11/02/2012

Outlet of culvert facing downstream; large deep scour pool – 11/02/2012

Invert deterioration, 06/16/2016

Downstream Railroad culvert, looking downstream – 11/08/2016

Rochester 21832
Wetlands Permit – Construction Sequence

April 21, 2017

Project Advertises August 29, 2017

2017 Season

No work anticipated.

2018 Season

1. Install perimeter controls and define maximum work limits for all grading and drainage work
2. Complete clearing/grubbing operations.
3. Install water diversion at inlet and outlet to utilize existing culvert during construction of new metal arch culvert.
4. Begin two-way alternating one lane traffic, shifting lanes to the southern (eastbound lane). Alternating one way traffic shall only be permitted during night time hours. Traffic shall be returned to normal traffic patterns each morning.
5. Construct outlet end of proposed metal arch culvert, including concrete headwall, grading, and stone apron.
6. Begin two-way alternating one lane traffic, shifting lanes to the northern (westbound lane). Alternating one way traffic shall only be permitted during night time hours. Traffic shall be returned to normal traffic patterns each morning.
7. Construct inlet end of metal arch culvert, including concrete headwall, grading, and stone apron.
8. Once the metal arch construction is complete, shift the water diversion installation at inlet and outlet to direct water to new metal arch while constructing the 36" RCP.
9. Begin two-way alternating one lane traffic, shifting lanes to the southern (eastbound lane). Alternating one way traffic shall only be permitted during night time hours. Traffic shall be returned to normal traffic patterns each morning.
10. Construct outlet end of 36" RCP wildlife crossing, including concrete headwall, grading, and stone apron.
11. Begin two-way alternating one lane traffic, shifting lanes to the northern (westbound lane). Alternating one way traffic shall only be permitted during night time hours. Traffic shall be returned to normal traffic patterns each morning.
12. Construct inlet end of 36" RCP wildlife crossing, including concrete headwall, grading, and stone apron.
13. **Shoulder day closure:**
    - Reset/replace guardrail on both sides of the roadway which were impacted during construction.
    - Finish headwall installations.
14. Cold plane operations for pavement matches at the beginning and end of the project limits
15. Final pavement course through project limits.
16. Reestablish slopes with seed and humus.

Anticipated Completion: August 2018

April 6, 2017

ROCHESTER
X-A002(234)
21832

PART WT 404 CRITERIA FOR SHORELINE STABILIZATION

Shoreline stabilization is required for the replacement of the existing 7'w x 5'h arch cmp which connects an unnamed stream under NH 11 approximately 1.5 miles west of the Spaulding Turnpike, adjacent to the Tractor Supply store. Outlet protection for the proposed drainage crossing replacement is required to protect and re-establish the channel and will propose stone fill within areas under the jurisdiction of the NH Wetlands Bureau and the US Army Corps of Engineers. The stone fill will be located in the channel and bank of the unnamed stream, as shown on the plans.

Pursuant to PART Wt 404 Criteria for Shoreline Stabilization, the following addresses each codified section of the Administrative Rules:

Wt 404.01 Least Intrusive Method

No shoreland stabilization is proposed under this project.

Wt 404.02 Diversion of Water

Replacement of the project culvert will be facilitated by utilizing the existing culvert as clean water bypass during construction of the proposed 103"w x 71"h polymer coated corrugated metal arch. After the arch culvert is constructed the water will be re-diverted to the structure while the 36" RCP critter crossing is constructed. This will minimize erosion and impacts to the wetland area.

Wt 404.03 Vegetative Stabilization

Natural vegetation will be left undisturbed to the maximum extent possible. Newly developed slopes and disturbed areas which are flatter than 2:1 will have humus and seed applied for turf establishment, this will help stabilize the project area. Stone lined areas include the channel and bank where slopes are 2:1.

Wt 404.04 Rip-Rap

(a) Stone fill, as proposed, is shown on the attached plans to protect the newly formed channel and bank at the inlet and outlet of the culvert. The stone fill will be used to provide outlet protection for the culvert crossing and to stabilize the embankments. This is necessary to maintain the structural integrity of the culvert and roadway slopes during all flow conditions.

(b) (1-5) The enclosed Section 585 specification for Stone Fill, Class B (Item 585.2), provides the description of the material size, gradation, and construction requirements. A cross section of the stone fill showing proposed thickness and other details have been provided on the attached plans. Bedding for the stone fill will consist of either:

- Natural ground excavated to the proposed underside of the stone fill with geotextile,

  or

- Newly constructed embankments consisting of suitable excavated material in conformance with Section 203 of the Specifications.

(b) (6) Enclosed are plan sheets to sufficiently indicate the relationship of the project to fixed points of reference, abutting properties, and features of the natural shoreline.

(b) (7) Stone fill is recommended for the limits shown on the enclosed plans to protect the channel and bank from erosion during flood flows and from scour during all flows, as well as slopes 2:1 and steeper that have difficulty supporting vegetation.

(c) **N/A**

(d) Stone fill for slope stabilization and for culvert protection, is proposed to extend down to and adequately keyed into the channel bottom of the unnamed stream to prevent possible undermining of the slope.

(e) Engineering plans are being provided as a part of the application for rip-rap in excess of 100 linear feet along the stream bank (approximately 160 linear feet of stone is proposed along channel and left and right stream banks, combined).

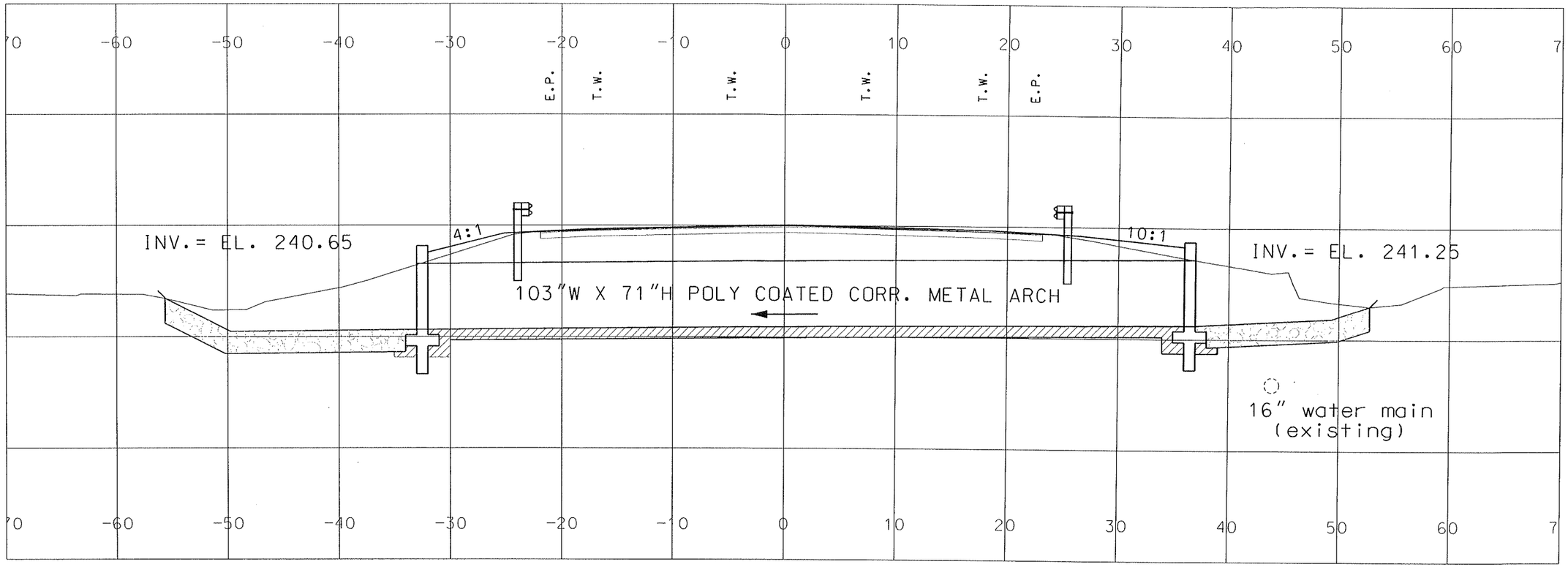

STA. 105+14

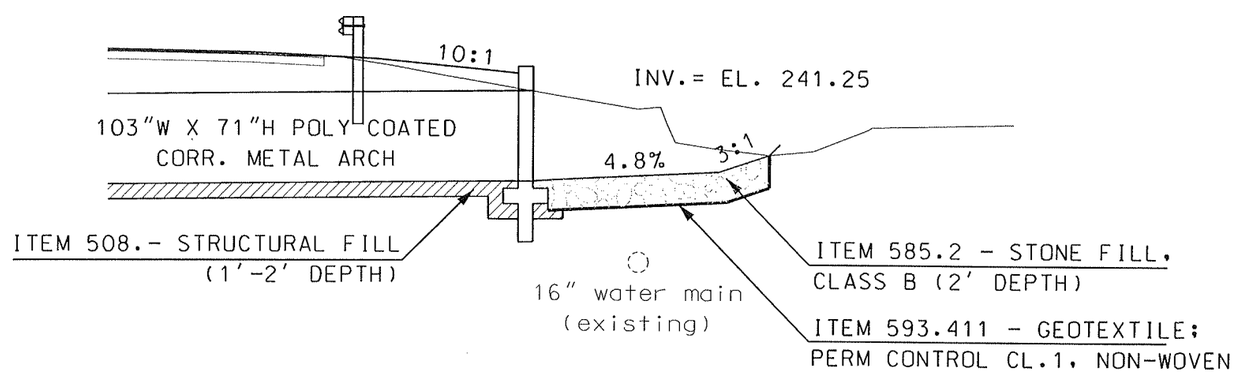

INLET STONE DETAIL

NOT TO SCALE

REVISIONS AFTER PROPOSAL			
NUMBER	DATE	STATION	STATION	DESCRIPTION

SDR PROCESSED	NAME1	DATE	DATE1
NEW DESIGN	NAME2	DATE	DATE2
SHEET CHECKED	NAME3	DATE	DATE3
AS BUILT DETAILS		DATE	

STATE OF NEW HAMPSHIRE

DEPARTMENT OF TRANSPORTATION • BUREAU OF HIGHWAY DESIGN

STONE DETAILS

DGN	STATE PROJECT NO.	SHEET NO.	TOTAL SHEETS
21832-WETStone-xsDetail	21832	1	1

SECTION 585 -- STONE FILL

Description

1.1 This work shall consist of furnishing and placing a dense stone fill at the locations shown on the plans or ordered.

Materials

2.1 Stone for stone fill shall be approved quarry stone, or broken rock of a hard, sound, and durable quality. The stones and spalls shall be so graded as to produce a dense fill with a minimum of voids.

2.1.1 Class A stone shall be irregular in shape with approximately 50 percent of the mass having a minimum volume of 12 ft^3 (0.3 m^3), approximately 30 percent of the mass ranging between 3 and 12 ft^3 (0.08 and 0.3 m^3), approximately 10 percent of the mass ranging between 1 and 3 ft^3 (0.03 and 0.08 m^3), and the remainder of the mass composed of spalls.

2.1.2 Class B stone shall be irregular in shape with approximately 50 percent of the mass having a minimum volume of 3 ft^3 (0.08 m^3), approximately 40 percent of the mass ranging between 1 and 3 ft^3 (0.03 and 0.08 m^3), and the remainder of the mass composed of spalls.

2.1.3 Class C stone shall consist of clean, durable fragments of ledge rock of uniform quality, reasonably free from thin or elongated pieces. The stone shall be made from rock which is free from topsoil and other organic material. The stone shall be graded as follows:

Sieve Size	Percentage by Weight Passing
12 in (300 mm)	100
4 in (100 mm)	50 - 90
1-1/2 in (37.5 mm)	0 - 30
3/4 in (19.0 mm)	0 - 10

2.1.4 Class D stone shall conform to 520.2 - Table 3 - Coarse Aggregate, Standard Stone Size No. 467.

2.1.5 Spalls for filling voids shall be stones or broken rock ranging downward from a maximum size of 1 ft^3 (0.03 m^3).

2.2 Gravel blanket material shall conform to 209.2.1.2.

2.3 Geotextile shall conform to 593.

Construction Requirements

3.1 Stones and spalls for stone fill shall be deposited and graded to eliminate voids and obtain a dense mass throughout the course. The spalls shall be tamped into place using an equipment bucket or other approved method.

3.1.1 When stone fill is placed on a slope, the stones shall be deposited in such a manner as not to dislodge the underlying material unnecessarily.

3.1.2 When stone fill is placed on a geotextile, it shall be deposited in a manner to maintain the integrity of the geotextile.

3.2 When gravel blanket is shown or ordered, the gravel shall be placed in layers not exceeding 12 in. (300 mm) in depth unless otherwise ordered.

3.3 The completed surface shall approximate the lines and grades shown or ordered. When ordered, stone placed over 1 ft. (300 mm) outside or above such lines and grades shall be removed.

3.4 Stone fill (Bridge) shall be placed within the limits shown on the plans.

Method of Measurement

4.1 Stone fill will be measured by the cubic yard (cubic meter) and in accordance with 109.01.

Basis of Payment

5.1 The accepted quantity of stone fill of the class specified will be paid for at the Contract unit price per cubic yard (cubic meter) complete in place.

5.2 Gravel blanket material specified or ordered will be paid for under 209.

5.3 Geotextile specified or ordered will be paid for under 593.

5.4 The accepted quantity of excavation required for placing stone fill and for placing any underlying gravel blanket will be paid for under the item of excavation being performed. Excavation herein refers only to excavation of original ground or to material ordered removed not shown on the plans.

5.5 Free borrow will not be required to replace the accepted quantity of stone obtained from the excavation. However, when the plans do not call for borrow, but the quantity of material removed from excavation for use under this item requires the Contractor to furnish borrow to complete the work, such borrow will be subsidiary.

Pay items and units:

585.1	Stone Fill, Class A	Cubic Yard (Cubic Meter)
585.2	Stone Fill, Class B	Cubic Yard (Cubic Meter)
585.21	Stone Fill, Class B (Bridge)	Cubic Yard (Cubic Meter
585.3	Stone Fill, Class C	Cubic Yard (Cubic Meter)
585.4	Stone Fill, Class D	Cubic Yard (Cubic Meter)

STATE OF NEW HAMPSHIRE
DEPARTMENT OF TRANSPORTATION

WETLANDS PLANS
FEDERAL AID PROJECT

X-A002(234)
N.H. PROJECT NO. 21832
NH ROUTE 11

DESIGN DATA	
AVERAGE DAILY TRAFFIC 20 16	17000
AVERAGE DAILY TRAFFIC 20 36	23000
PERCENT OF TRUCKS	5.2
DESIGN SPEED	40 MPH
LENGTH OF PROJECT	450 FT

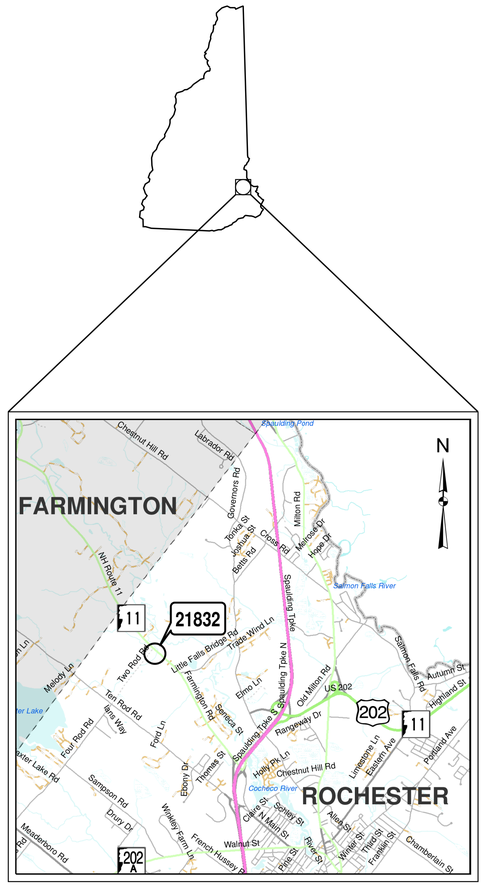

LOCATION MAP

1 1/2 0 1 2 mi.

GRAPHIC SCALE

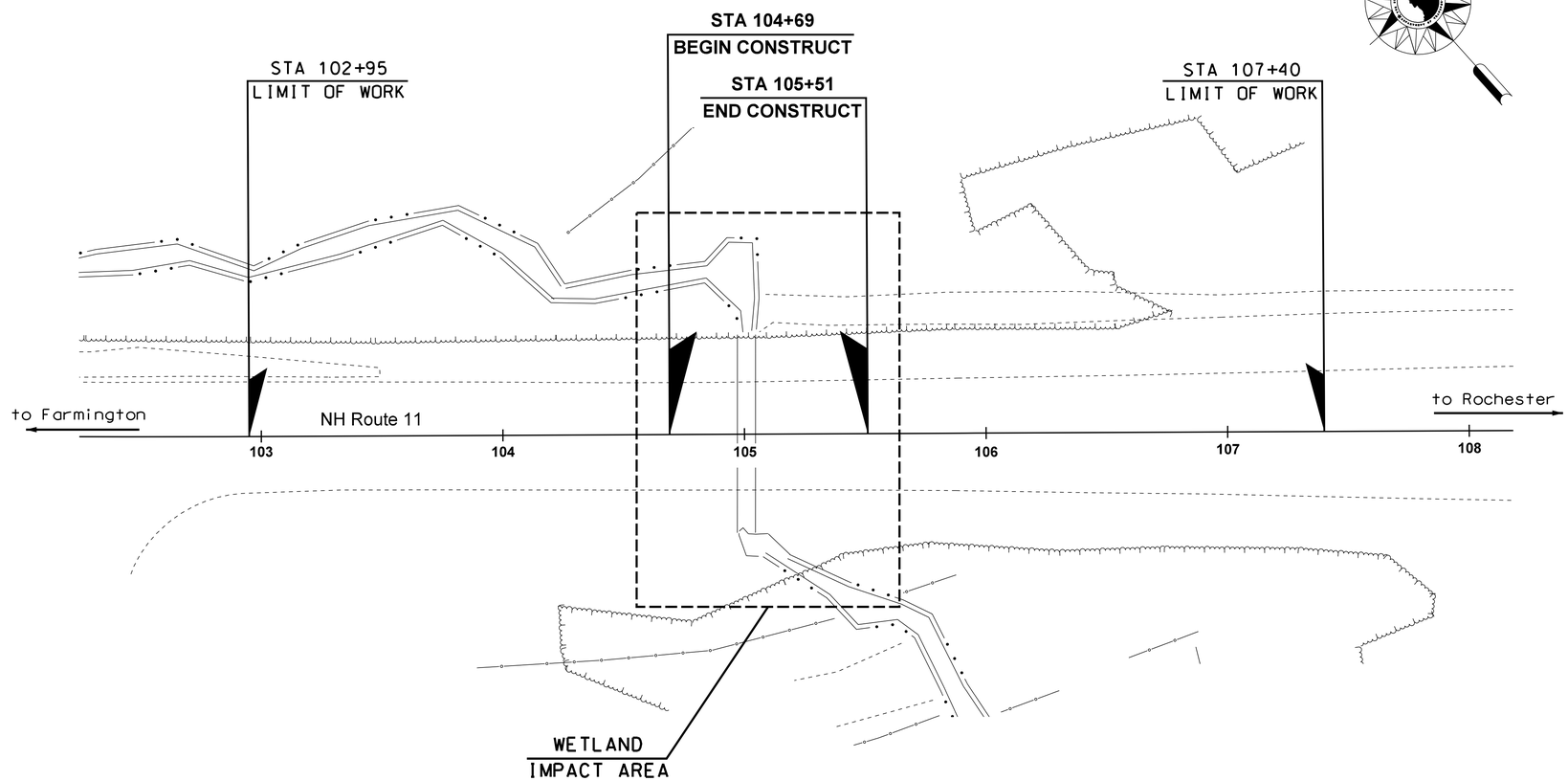

INDEX OF SHEETS

1	FRONT SHEET
2-3	STANDARD SYMBOLS SHEETS
4	WETLAND IMPACT SUMMARY
5	WETLAND IMPACT PLAN
6	EROSION CONTROL STRATEGIES
7	EROSION CONTROL PLAN

WETLANDS DELINEATED BY
NHBOE MATT URBAN 11/2016

TOWN OF ROCHESTER
COUNTY OF STRAFFORD

SCALE: 1" = 30'

DRAWN BY J. D'ENTREMONT DATE 03/2017
CHECKED BY L. SAVAGE DATE 05/2017

NHDOT THE STATE OF NEW HAMPSHIRE DEPARTMENT OF TRANSPORTATION

NH ROUTE 11
WETLAND IMPACT PLANS
TOWN OF ROCHESTER
05/03/2017

FEDERAL PROJECT NO.	STATE PROJECT NO.	SHEET NO.	TOTAL SHEETS
X-A002(234)	21832	1	7

GENERAL

EDGE OF PAVEMENT	PROPOSED ROADWAY	existing roadway	(pavement removed outside slope lines)
TRAVELED WAY			
DRIVEWAYS	(label surface type)		
BUILDINGS	(building to be removed)	(label house or type of building)	
FOUNDATION	(label type)		
LEACH FIELD	leach field		
BRIDGE CROSSINGS	STREAM	OVERPASS	
STEPS AND WALK	(label type)		
INTERMITTENT WATER COURSE			
SHORE LINE	river/stream	pond	(label name of water body)
POTENTIAL WET AREA SYMBOL			
BRUSH OR WOODS LINE			
TREES (PLANS)	(deciduous)	(coniferous)	(stump)
TREE OR STUMP (CROSS-SECTIONS)	(show station, circumference in feet & type)		
HEDGE	(label type)		
MONITORING WELL	mon W		
WELL	W		
FLAG POLE	fp		

ORIGINAL GROUND (TYPICALS)		
ROCK OUTCROP		
ROCK LINE (TYPICALS & SECTIONS ONLY)		
GUARDRAIL (label type)	existing: bgr, cgr	PROPOSED
JERSEY BARRIER		
CURB (LABEL TYPE)		
STONE WALL		
RETAINING WALL (LABEL TYPE)		(points toward retained ground)
FENCE (LABEL TYPE)		
SIGNS	(single post)	(double post)
GAS PUMP	gp	
FUEL TANK (ABOVE GROUND)	ft	(label size & type)
STORAGE TANK FILLER CAP	fc	
SEPTIC TANK	S	
GRAVE	gr	
MAILBOX	mb	
VENT PIPE	vp	
SATELLITE DISH ANTENNA	da	
PHONE	ph	
GROUND LIGHT/LAMP POST	gl	lp
BORING LOCATION	B	
TEST PIT	TP	
INTERSTATE NUMBERED HIGHWAY	293	
UNITED STATES NUMBERED HIGHWAY	3	
STATE NUMBERED HIGHWAY	102	

SHORELAND - WETLAND

WETLAND DESIGNATION AND TYPE	2 PUB2E
DELINEATED WETLAND	DW
ORDINARY HIGH WATER	OHW
TOP OF BANK	TOB
TOP OF BANK & ORDINARY HIGH WATER	TOBOHW
NORMAL HIGH WATER	NHW
WIDTH AT BANK FULL	WBF
PRIME WETLAND	PWET
PRIME WETLAND 100' BUFFER	PWET100
NON-JURISDICTIONAL DRAINAGE AREA	NJDA
COWARDIN DISTINCTION LINE	CDL
TIDAL BUFFER ZONE	TBZ
DEVELOPED TIDAL BUFFER ZONE	DTBZ
HIGHEST OBSERVABLE TIDE LINE	HOTL
MEAN HIGH WATER	MHW
MEAN LOW WATER	MLW
VERNAL POOL	VP
SPECIAL AQUATIC SITE	SAS
REFERENCE LINE	REF
WATER FRONT BUFFER	WB50
NATURAL WOODLAND BUFFER	NWB150
PROTECTED SHORELAND	PS250
INVASIVE SPECIES LABEL	I.S. I; I.S. II
INVASIVE SPECIES	INV

FLOODPLAIN / FLOODWAY

500 YEAR FLOODPLAIN BOUNDARY	FP500
100 YEAR FLOODPLAIN BOUNDARY	FP100
FLOODWAY	FW

ENGINEERING

CONSTRUCTION BASELINE	30 31 32
PC, PT, POT (ON CONST BASELINE)	
PI (IN CONSTRUCTION BASELINES)	
INTERSECTION OR EQUATION OF TWO LINES	
ORIGINAL GROUND LINE (PROFILES AND CROSS-SECTIONS)	
PROFILE GRADE LINE (PROFILES AND CROSS-SECTIONS)	
CLEARING LINE	SLOPE LINE; CLEARING LINE
SLOPE LINE	
SLOPE LINE (FILL)	
SLOPE LINE (CUT)	
PROFILES AND CROSS SECTIONS:	
ORIGINAL GROUND ELEVATION (LEFT)	72.5
FINISHED GRADE ELEVATION (RIGHT)	79.14

SHEET 1 OF 2

STATE OF NEW HAMPSHIRE

DEPARTMENT OF TRANSPORTATION ∘ BUREAU OF HIGHWAY DESIGN

WETLAND IMPACT PLANS

REVISION DATE	DGN	STATE PROJECT NO.	SHEET NO.	TOTAL SHEETS
11-21-2012	21832WetStdSymb1_2	21832	2	7

DRAINAGE

MANHOLE — (existing) — (PROPOSED)

CATCH BASIN — cb

DROP INLET — di

DRAINAGE PIPE (existing) — (label size & type)

DRAINAGE PIPE (PROPOSED)

UNDERDRAIN (existing) W/ FLUSHING BASIN — fb — (label size & type)

UNDERDRAIN (PROPOSED) W/ FLUSHING BASIN

show direction of flow

HEADER (existing & PROPOSED) — (with stone outlet protection)

END SECTION (existing & PROPOSED) — METAL or PLASTIC — RCP

OPEN DITCH (PROPOSED)

EROSION CONTROL/ STONE SLOPE PROTECTION

BOUNDARIES / RIGHT-OF-WAY

RIGHT-OF-WAY LINE — (label type)

RR RIGHT-OF-WAY LINE

PROPERTY LINE

PROPERTY LINE (COMMON OWNER) — Z

TOWN LINE — BOW / CONCORD

COUNTY LINE — COOS / GRAFTON

STATE LINE — MAINE / NEW HAMPSHIRE

NATIONAL FOREST

CONSERVATION LAND — LC

BENCH MARK / SURVEY DISK

BOUND — bnd — (PROPOSED)

STATE LINE/ TOWN LINE MONUMENT — S/L — T/L

NHDOT PROJECT MARKER

IRON PIPE OR PIN — ip

DRILL HOLE IN ROCK — dh

TAX MAP AND LOT NUMBER — 156 / 14 — 1642/341 — 6.80 Ac.±

PROPERTY PARCEL NUMBER — 12

HISTORIC PROPERTY — H

UTILITIES

	existing	PROPOSED
TELEPHONE POLE		
POWER POLE		
JOINT OCCUPANCY	(plot point at face not center of symbol)	
MISCELLANEOUS/UNKNOWN POLE		
GUY POLE OR PUSH BRACE		
LIGHT POLE		
LIGHT ON POWER POLE		
LIGHT ON JOINT POLE		
POLE STATUS: REMOVE, LEAVE, PROPOSED, OR TEMPORARY AS APPLICABLE e.g.:	R L	P+04 25.0′ T+04 25.0′
RAILROAD	(label ownership)	
RAILROAD SIGN		
RAILROAD SIGNAL		
UTILITY JUNCTION BOX	jb	JB
OVERHEAD WIRE	OW (label type)	OW
UNDERGROUND UTILITIES		
WATER (on existing lines label size, type and note if abandoned)	W	PW
SEWER	S	PS
TELEPHONE	T	PT
ELECTRIC	E	PE
GAS	G	PG
LIGHTING	L	PL
INTELLIGENT TRANSPORTATION SYSTEM	ITS	PITS
FIBER OPTIC	FO	PFO
WATER SHUT OFF	WSO	WSO
GAS SHUT OFF	GSO	GSO
HYDRANT	HYD	HYD
MANHOLES		
SEWER	S	MHS
TELEPHONE	T	MHT
ELECTRICAL	E	MHE
GAS	G	MHG
UNKNOWN	U	

TRAFFIC SIGNALS / ITS

	existing	PROPOSED
MAST ARM (existing)		30′ MA (NOTE ANGLE FROM ℄)
OPTICOM RECEIVER		
OPTICOM STROBE		
TRAFFIC SIGNAL		
PEDESTAL WITH PEDESTRIAN SIGNAL HEADS AND PUSH BUTTON UNIT		
SIGNAL CONDUIT	C	PC
CONTROLLER CABINET	cc	CC
METER PEDESTAL	mp	MP
PULL BOX	pb	PB
LOOP DETECTOR (QUADRUPOLE)		(label size)
LOOP DETECTOR (RECTANGULAR)		(label size)
CAMERA POLE (CCTV)		
FIBER OPTIC DELINEATOR	fod	FOD
FIBER OPTIC SPLICE VAULT	SVF	SVF
ITS EQUIPMENT CABINET	its	ITS
VARIABLE SPEED LIMIT SIGN		
DYNAMIC MESSAGE SIGN		
ROAD AND WEATHER INFO SYSTEM		

CONSTRUCTION NOTES

CURB MARK NUMBER - BITUMINOUS	B-1
CURB MARK NUMBER - GRANITE	G-1
CLEARING AND GRUBBING AREA	A
DRAINAGE NOTE	1
EROSION CONTROL NOTE	A
FENCING NOTE	A
GUARDRAIL NOTE	1
ITS NOTE	1
LIGHTING NOTE	A
TRAFFIC SIGNAL NOTE	1

SHEET 2 OF 2

STATE OF NEW HAMPSHIRE

DEPARTMENT OF TRANSPORTATION ∘ BUREAU OF HIGHWAY DESIGN

WETLAND IMPACT PLANS

REVISION DATE	DGN	STATE PROJECT NO.	SHEET NO.	TOTAL SHEETS
9-1-2016	21832WetStdSymb1_2	21832	3	7

LEGEND

TYPE OF WETLAND IMPACT	SHADING/ HATCHING
NEW HAMPSHIRE WETLANDS BUREAU (PERMANENT NON-WETLAND)	
NEW HAMPSHIRE WETLANDS BUREAU & ARMY CORP OF ENGINEERS (PERMANENT WETLAND)	
TEMPORARY IMPACTS	

- # WETLAND DESIGNATION NUMBER
- # WETLAND IMPACT LOCATION
- # WETLAND MITIGATION AREA
- MITIGATION

WETLAND CLASSIFICATION CODES	
PSS1E	PALUSTRINE, SCRUB-SHRUB, BROAD LEAVED DECIDUOUS, SEASONALLY FLOODED/SATURATED
R2UB12	RIVERINE, LOWER PERENNIAL, UNCONSOLIDATED BOTTOM, COBBLE-GRAVEL-SAND
BANK	BANK

EROSION CONTROL PLAN LEGEND

PC — PERIMETER CONTROL
SILT FENCE
EROSION CONTROL MIX BERM
EROSION CONTROL MIX SOX
TURBIDITY CURTAIN
SHEET PILE
COFFER DAM

NB/PC — NATURAL BUFFER/PERIMETER CONTROL
SILT FENCE
EROSION CONTROL MIX BERM
EROSION CONTROL MIX SOX
TURBIDITY CURTAIN
SHEET PILE
COFFER DAM

CP — CHANNEL PROTECTION
STONE CHECK DAMS
STRAW WATTLES
CHANNEL MATTING
CLASS D EROSION STONE
CLASS C STONE

CWB — CLEAN WATER BYPASS
PUMP THROUGH PIPE
DRAIN THROUGH PIPE OR CHANNEL

WETLAND IMPACT SUMMARY

WETLAND NUMBER	WETLAND CLASSIFICATION	LOCATION	AREA IMPACTS								LINEAR STREAM IMPACTS FOR PERMANENT		
			PERMANENT				TEMPORARY						
			N.H.W.B (NON-WETLAND) (BANK)		N.H.W.B AND A.C.O.E. (WETLAND)		N.H.W.B (NON-WETLAND) (BANK)		N.H.W.B AND A.C.O.E. (WETLAND)		BANK LEFT	BANK RIGHT	CHAN.
			SF	LF	SF	LF	SF	LF	SF	LF	LF	LF	LF
1	R2UB12	A			723	136			105	21	11	27	98
2	PSS1E	B							37				
3	BANK	C	75	20			237	56			20		
3	BANK	D	24	13							13		
4	R2UB12	E			430	54			118	46			54
5	BANK	F	166	29			140	32				29	
		Total	265	62	1153	190	377	88	260	67	44	56	152

PERMANENT IMPACTS: 1418 SF
TEMPORARY IMPACTS: 637 SF

TOTAL IMPACTS: 2055 SF

REVISIONS AFTER PROPOSAL

NUMBER	DATE	STATION	STATION	DESCRIPTION

SDR PROCESSED — DATE
NEW DESIGN — L. SAVAGE — DATE 04/2017
SHEET CHECKED — NAME3 — DATE DATE3
AS BUILT DETAILS — DATE

STATE OF NEW HAMPSHIRE
DEPARTMENT OF TRANSPORTATION ∘ BUREAU OF HIGHWAY DESIGN

WETLAND IMPACT PLANS

MODEL	DGN	STATE PROJECT NO.	SHEET NO.	TOTAL SHEETS
WET IMP	21832WET	21832	4	7

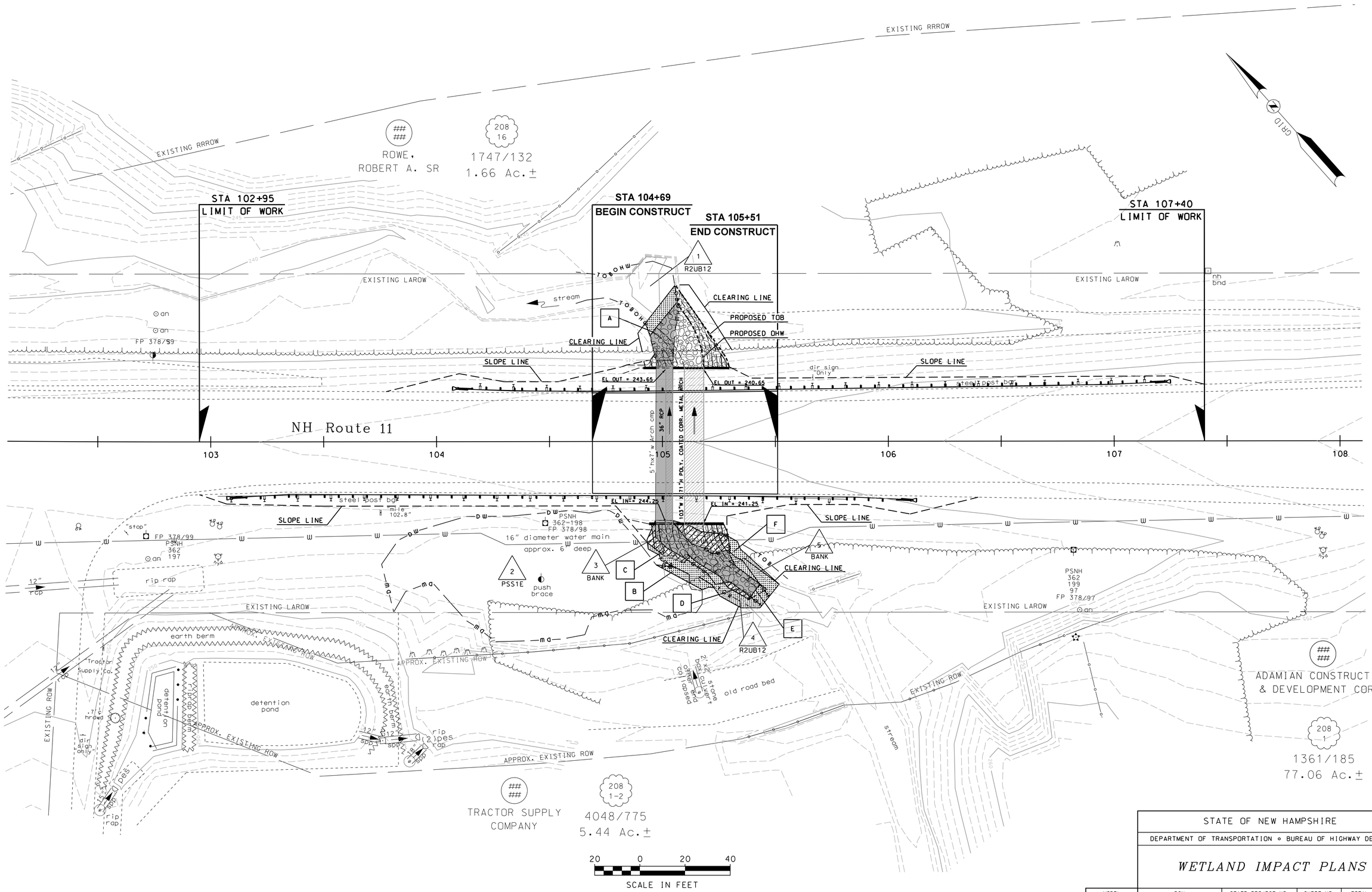

REVISIONS AFTER PROPOSAL

NUMBER	DATE	STATION	STATION	DESCRIPTION

SDR PROCESSED		DATE	
NEW DESIGN	L. SAVAGE	DATE	04/2017
SHEET CHECKED	NAME3	DATE	DATE3
AS BUILT DETAILS		DATE	

STATE OF NEW HAMPSHIRE

DEPARTMENT OF TRANSPORTATION ∘ BUREAU OF HIGHWAY DESIGN

WETLAND IMPACT PLANS

MODEL	DGN	STATE PROJECT NO.	SHEET NO.	TOTAL SHEETS
WET01	21832WET	21832	5	7

EROSION CONTROL STRATEGIES

1. ENVIRONMENTAL COMMITMENTS:
   1.1. THESE GUIDELINES DO NOT RELIEVE THE CONTRACTOR FROM COMPLIANCE WITH ANY CONTRACT PROVISIONS, OR APPLICABLE FEDERAL, STATE, AND LOCAL REGULATIONS.
   1.2. THIS PROJECT WILL BE SUBJECT TO THE US EPA'S NATIONAL POLLUTANT DISCHARGE ELIMINATION SYSTEM (NPDES) STORM WATER CONSTRUCTION GENERAL PERMIT AS ADMINISTERED BY THE ENVIRONMENTAL PROTECTION AGENCY (EPA). THIS PROJECT IS SUBJECT TO REQUIREMENTS IN THE MOST RECENT CONSTRUCTION GENERAL PERMIT (CGP).
   1.3. THE CONTRACTOR'S ATTENTION IS DIRECTED TO THE NHDES WETLAND PERMIT, THE US ARMY CORPS OF ENGINEERS PERMIT, WATER QUALITY CERTIFICATION AND THE SPECIAL ATTENTION ITEMS INCLUDED IN THE CONTRACT DOCUMENTS.
   1.4. ALL STORM WATER, EROSION AND SEDIMENT CONTROL MEASURES SHALL BE INSTALLED AND MAINTAINED IN ACCORDANCE WITH THE NEW HAMPSHIRE STORMWATER MANUAL, VOLUME 3, EROSION AND SEDIMENT CONTROLS DURING CONSTRUCTION (DECEMBER 2008) (BMP MANUAL) AVAILABLE FROM THE NEW HAMPSHIRE DEPARTMENT OF ENVIRONMENTAL SERVICES (NHDES).
   1.5. THE CONTRACTOR SHALL COMPLY WITH RSA 485-A:17, AND ALL, PUBLISHED NHDES ALTERATION OF TERRAIN ENV-WQ 1500 REQUIREMENTS (HTTP://DES.NH.GOV/ORGANIZATION/COMMISSIONER/LEGAL/RULES/INDEX.HTM)
   1.6. THE CONTRACTOR IS DIRECTED TO REVIEW AND COMPLY WITH SECTION 107.1 OF THE CONTRACT AS IT REFERS TO SPILLAGE, AND ALSO WITH REGARDS TO EROSION, POLLUTION, AND TURBIDITY PRECAUTIONS.

2. STANDARD EROSION CONTROL SEQUENCING APPLICABLE TO ALL CONSTRUCTION PROJECTS:
   2.1. PERIMETER CONTROLS SHALL BE INSTALLED PRIOR TO EARTH DISTURBING ACTIVITIES. PERIMETER CONTROLS AND STABILIZED CONSTRUCTION EXITS SHALL BE INSTALLED AS SHOWN IN THE BMP MANUAL AND AS DIRECTED BY THE STORMWATER POLLUTION PREVENTION PLAN (SWPPP) PREPARER.
   2.2. EROSION, SEDIMENTATION CONTROL MEASURES AND INFILTRATION BASINS SHALL BE CLEANED, REPLACED AND AUGMENTED AS NECESSARY TO PREVENT SEDIMENTATION BEYOND PROJECT LIMITS THROUGHOUT THE PROJECT DURATION.
   2.3. EROSION AND SEDIMENT CONTROL MEASURES SHALL BE INSPECTED IN ACCORDANCE WITH THE CONSTRUCTION GENERAL PERMIT AND SECTION 645 OF THE NHDOT SPECIFICATIONS FOR ROAD AND BRIDGES CONSTRUCTION.
   2.4. AN AREA SHALL BE CONSIDERED STABLE IF ONE OF THE FOLLOWING HAS OCCURRED:
      (A) BASE COURSE GRAVELS HAVE BEEN INSTALLED IN AREAS TO BE PAVED;
      (B) A MINIMUM OF 85% VEGETATED GROWTH HAS BEEN ESTABLISHED;
      (C) A MINIMUM OF 3" OF NON-EROSIVE MATERIAL SUCH AS STONE OR RIP-RAP HAS BEEN INSTALLED;
      (D) TEMPORARY SLOPE STABILIZATION CONFORMING TO TABLE 1 HAS BEEN PROPERLY INSTALLED
   2.5. ALL STOCKPILES SHALL BE CONTAINED WITH A PERIMETER CONTROL. IF THE STOCKPILE IS TO REMAIN UNDISTURBED FOR MORE THAN 14 DAYS, MULCHING WILL BE REQUIRED.
   2.6. A WATER TRUCK SHALL BE AVAILABLE TO CONTROL EXCESSIVE DUST AT THE DIRECTION OF THE CONTRACT ADMINISTRATOR.
   2.7. TEMPORARY EROSION AND SEDIMENTATION CONTROL MEASURES SHALL REMAIN UNTIL THE AREA HAS BEEN PERMANENTLY STABILIZED.
   2.8. CONSTRUCTION PERFORMED ANY TIME BETWEEN NOVEMBER 30" AND MAY 1" OF ANY YEAR SHALL BE CONSIDERED WINTER CONSTRUCTION AND SHALL CONFORM TO THE FOLLOWING REQUIREMENTS.
      (A) ALL PROPOSED VEGETATED AREAS WHICH DO NOT EXHIBIT A MINIMUM OF 85% VEGETATIVE GROWTH BY OCTOBER 15", OR WHICH ARE DISTURBED AFTER OCTOBER 15", SHALL BE STABILIZED IN ACCORDANCE WITH TABLE 1.
      (B) ALL DITCHES OR SWALES WHICH DO NOT EXHIBIT A MINIMUM OF 85% VEGETATIVE GROWTH BY OCTOBER 15", OR WHICH ARE DISTURBED AFTER OCTOBER 15", SHALL BE STABILIZED TEMPORARILY WITH STONE OR IN ACCORDANCE WITH TABLE 1.
      (C) AFTER NOVEMBER 30" INCOMPLETE ROAD SURFACES, WHERE WORK HAS STOPPED FOR THE SEASON, SHALL BE PROTECTED IN ACCORDANCE WITH TABLE 1.
      (D) WINTER EXCAVATION AND EARTHWORK SHALL BE DONE SUCH THAT NO MORE THAN 1 ACRE OF THE PROJECT IS WITHOUT STABILIZATION AT ONE TIME, UNLESS A WINTER CONSTRUCTION PLAN HAS BEEN APPROVED BY NHDOT THAT MEETS THE REQUIREMENTS OF ENV-WQ 1505.02 AND ENV-WQ 1505.05.
      (E) A SWPPP AMENDMENT SHALL BE SUBMITTED TO THE DEPARTMENT, FOR APPROVAL, ADDRESSING COLD WEATHER STABILIZATION (ENV-WQ 1505.05) AND INCLUDING THE REQUIREMENTS OF NO LESS THAN 30 DAYS PRIOR TO THE COMMENCEMENT OF WORK SCHEDULED AFTER NOVEMBER 30".

GENERAL CONSTRUCTION PLANNING AND SELECTION OF STRATEGIES TO CONTROL EROSION AND SEDIMENT ON HIGHWAY CONSTRUCTION PROJECTS

3. PLAN ACTIVITIES TO ACCOUNT FOR SENSITIVE SITE CONDITIONS:
   3.1. CLEARLY FLAG AREAS TO BE PROTECTED IN THE FIELD AND PROVIDE CONSTRUCTION BARRIERS TO PREVENT TRAFFICKING OUTSIDE OF WORK AREAS.
   3.2. CONSTRUCTION SHALL BE SEQUENCED TO LIMIT THE DURATION AND AREA OF EXPOSED SOILS.
   3.3. PROTECT AND MAXIMIZE EXISTING NATIVE VEGETATION AND NATURAL FOREST BUFFERS BETWEEN CONSTRUCTION ACTIVITY AND SENSITIVE AREAS.
   3.4. WHEN WORK IS PERFORMED IN AND NEAR WATER COURSES, STREAM FLOW DIVERSION METHODS SHALL BE IMPLEMENTED PRIOR TO ANY EXCAVATION OR FILLING.
   3.5. WHEN WORK IS PERFORMED WITHIN 50 FEET OF SURFACE WATERS (WETLAND, OPEN WATER OR FLOWING WATER), PERIMETER CONTROL SHALL BE ENHANCED CONSISTENT WITH SECTION 2.1.2.1. OF THE 2012 NPDES CONSTRUCTION GENERAL PERMIT.

4. MINIMIZE THE AMOUNT OF EXPOSED SOIL:
   4.1. CONSTRUCTION SHALL BE SEQUENCED TO LIMIT THE DURATION AND AREA OF EXPOSED SOILS. MINIMIZE THE AREA OF EXPOSED SOIL AT ANY ONE TIME. PHASING SHALL BE USED TO REDUCE THE AMOUNT AND DURATION OF SOIL EXPOSED TO THE ELEMENTS AND VEHICLE TRACKING.
   4.2. UTILIZE TEMPORARY MULCHING OR PROVIDE ALTERNATE TEMPORARY STABILIZATION ON EXPOSED SOILS IN ACCORDANCE WITH TABLE 1.
   4.3. THE MAXIMUM AMOUNT OF DISTURBED EARTH SHALL NOT EXCEED A TOTAL OF 5 ACRES FROM MAY 1" THROUGH NOVEMBER 30", OR EXCEED ONE ACRE DURING WINTER MONTHS, UNLESS THE CONTRACTOR DEMONSTRATES TO THE DEPARTMENT THAT THE ADDITIONAL AREA OF DISTURBANCE IS NECESSARY TO MEET THE CONTRACTORS CRITICAL PATH METHOD SCHEDULE (CPM), AND THE CONTRACTOR HAS ADEQUATE RESOURCES AVAILABLE TO ENSURE THAT ENVIRONMENTAL COMMITMENTS WILL BE MET.

5. CONTROL STORMWATER FLOWING ONTO AND THROUGH THE PROJECT:
   5.1. DIVERT OFF SITE RUNOFF OR CLEAN WATER AWAY FROM THE CONSTRUCTION ACTIVITY TO REDUCE THE VOLUME THAT NEEDS TO BE TREATED ON SITE.
   5.2. DIVERT STORM RUNOFF FROM UPSLOPE DRAINAGE AREAS AWAY FROM DISTURBED AREAS, SLOPES, AND AROUND ACTIVE WORK AREAS AND TO A STABILIZED OUTLET LOCATION.
   5.3. CONSTRUCT IMPERMEABLE BARRIERS AS NECESSARY TO COLLECT OR DIVERT CONCENTRATED FLOWS FROM WORK OR DISTURBED AREAS.
   5.4. STABILIZE, TO APPROPRIATE ANTICIPATED VELOCITIES, CONVEYANCE CHANNELS OR PUMPING SYSTEMS NEEDED TO CONVEY CONSTRUCTION STORMWATER TO BASINS AND DISCHARGE LOCATIONS PRIOR TO USE.
   5.5. DIVERT OFF-SITE WATER THROUGH THE PROJECT IN AN APPROPRIATE MANNER SO NOT TO DISTURB THE UPSTREAM OR DOWNSTREAM SOILS, VEGETATION OR HYDROLOGY BEYOND THE PERMITTED AREA.

6. PROTECT SLOPES:
   6.1. INTERCEPT AND DIVERT STORM RUNOFF FROM UPSLOPE DRAINAGE AREAS AWAY FROM UNPROTECTED AND NEWLY ESTABLISHED AREAS AND SLOPES TO A STABILIZED OUTLET OR CONVEYANCE.
   6.2. CONSIDER HOW GROUNDWATER SEEPAGE ON CUT SLOPES MAY IMPACT SLOPE STABILITY AND INCORPORATE APPROPRIATE MEASURES TO MINIMIZE EROSION.
   6.3. CONVEY STORMWATER DOWN THE SLOPE IN A STABILIZED CHANNEL OR SLOPE DRAIN.
   6.4. THE OUTER FACE OF THE FILL SLOPE SHOULD BE IN A LOOSE RUFFLED CONDITION PRIOR TO TURF ESTABLISHMENT. TOPSOIL OR HUMUS LAYERS SHALL BE TRACKED UP AND DOWN THE SLOPE, DISKED, HARROWED, DRAGGED WITH A CHAIN OR MAT, MACHINE-RAKED, OR HAND-WORKED TO PRODUCE A RUFFLED SURFACE.

7. ESTABLISH STABILIZED CONSTRUCTION EXITS:
   7.1. INSTALL AND MAINTAIN CONSTRUCTION EXITS, ANYWHERE TRAFFIC LEAVES A CONSTRUCTION SITE ONTO A PUBLIC RIGHT-OF-WAY.
   7.2. SWEEP ALL CONSTRUCTION RELATED DEBRIS AND SOIL FROM THE ADJACENT PAVED ROADWAYS AS NECESSARY.

8. PROTECT STORM DRAIN INLETS:
   8.1. DIVERT SEDIMENT LADEN WATER AWAY FROM INLET STRUCTURES TO THE EXTENT POSSIBLE.
   8.2. INSTALL SEDIMENT BARRIERS AND SEDIMENT TRAPS AT INLETS TO PREVENT SEDIMENT FROM ENTERING THE DRAINAGE SYSTEM.
   8.3. CLEAN CATCH BASINS, DRAINAGE PIPES, AND CULVERTS IF SIGNIFICANT SEDIMENT IS DEPOSITED.
   8.4. DROP INLET SEDIMENT BARRIERS SHOULD NEVER BE USED AS THE PRIMARY MEANS OF SEDIMENT CONTROL AND SHOULD ONLY BE USED TO PROVIDE AN ADDITIONAL LEVEL OF PROTECTION TO STRUCTURES AND DOWN-GRADIENT SENSITIVE RECEPTORS.

9. SOIL STABILIZATION:
   9.1. WITHIN THREE DAYS OF THE LAST ACTIVITY IN AN AREA, ALL EXPOSED SOIL AREAS, WHERE CONSTRUCTION ACTIVITIES ARE COMPLETE, SHALL BE STABILIZED.
   9.2. IN ALL AREAS, TEMPORARY SOIL STABILIZATION MEASURES SHALL BE APPLIED IN ACCORDANCE WITH THE STABILIZATION REQUIREMENTS (SECTION 2.2) OF THE 2012 CGP. (SEE TABLE 1 FOR GUIDANCE ON THE SELECTION OF TEMPORARY SOIL STABILIZATION MEASURES.)
   9.3. EROSION CONTROL SEED MIX SHALL BE SOWN IN ALL INACTIVE CONSTRUCTION AREAS THAT WILL NOT BE PERMANENTLY SEEDED WITHIN TWO WEEKS OF DISTURBANCE AND PRIOR TO SEPTEMBER 15, OF ANY GIVEN YEAR, IN ORDER TO ACHIEVE VEGETATIVE STABILIZATION PRIOR TO THE END OF THE GROWING SEASON.
   9.4. SOIL TACKIFIERS MAY BE APPLIED IN ACCORDANCE WITH THE MANUFACTURER'S SPECIFICATIONS AND REAPPLIED AS NECESSARY TO MINIMIZE SOIL AND MULCH LOSS UNTIL PERMANENT VEGETATION IS ESTABLISHED.

10. RETAIN SEDIMENT ON-SITE AND CONTROL DEWATERING PRACTICES:
   10.1. TEMPORARY SEDIMENT BASINS (CGP-SECTION 2.1.3.2) OR SEDIMENT TRAPS (ENV-WQ 1506.10) SHALL BE SIZED TO RETAIN, ON SITE, THE VOLUME OF A 2-YEAR 24-HOUR STORM EVENT FOR ANY AREA OF DISTURBANCE OR 3,600 CUBIC FEET OF STORMWATER RUNOFF PER ACRE OF DISTURBANCE, WHICHEVER IS GREATER. TEMPORARY SEDIMENT BASINS USED TO TREAT STORMWATER RUNOFF FROM AREAS GREATER THAN 5-ACRES OF DISTURBANCE SHALL BE SIZED TO ALSO CONTROL STORMWATER RUNOFF FROM A 10-YEAR 24 HOUR STORM EVENT. ON-SITE RETENTION OF THE 10-YEAR 24-HOUR EVENT IS NOT REQUIRED.
   10.2. CONSTRUCT AND STABILIZE DEWATERING INFILTRATION BASINS PRIOR TO ANY EXCAVATION THAT MAY REQUIRE DEWATERING.
   10.3. TEMPORARY SEDIMENT BASINS OR TRAPS SHALL BE PLACED AND STABILIZED AT LOCATIONS WHERE CONCENTRATED FLOW (CHANNELS AND PIPES) DISCHARGE TO THE SURROUNDING ENVIRONMENT FROM AREAS OF UNSTABILIZED EARTH DISTURBING ACTIVITIES.

11. ADDITIONAL EROSION AND SEDIMENT CONTROL GENERAL PRACTICES:
   11.1. USE TEMPORARY MULCHING, PERMANENT MULCHING, TEMPORARY VEGETATIVE COVER, AND PERMANENT VEGETATIVE COVER TO REDUCE THE NEED FOR DUST CONTROL. USE MECHANICAL SWEEPERS ON PAVED SURFACES WHERE NECESSARY TO PREVENT DUST BUILDUP. APPLY WATER, OR OTHER DUST INHIBITING AGENTS OR TACKIFIERS, AS APPROVED BY THE NHDES.
   11.2. ALL STOCKPILES SHALL BE CONTAINED WITH TEMPORARY PERIMETER CONTROLS. INACTIVE SOIL STOCKPILES SHOULD BE PROTECTED WITH SOIL STABILIZATION MEASURES (TEMPORARY EROSION CONTROL SEED MIX AND MULCH, SOIL BINDER) OR COVERED WITH ANCHORED TARPS.
   11.3. EROSION AND SEDIMENT CONTROL MEASURES WILL BE INSPECTED IN ACCORDANCE WITH SECTION 645 OF NHDOT SPECIFICATIONS, WEEKLY AND WITHIN 24 HOURS AFTER ANY STORM EVENT GREATER THAN 0.25 IN. OF RAIN PER 24-HOUR PERIOD. EROSION AND SEDIMENT CONTROL MEASURES WILL ALSO BE INSPECTED IN ACCORDANCE WITH THE GUIDANCE MEMO FROM THE NHDES CONTAINED WITHIN THE CONTRACT PROPOSAL AND THE EPA CONSTRUCTION GENERAL PERMIT.
   11.4. THE CONTRACTOR SHOULD UTILIZE STORM DRAIN INLET PROTECTION TO PREVENT SEDIMENT FROM ENTERING A STORM DRAINAGE SYSTEM PRIOR TO THE PERMANENT STABILIZATION OF THE CONTRIBUTING DISTURBED AREA.
   11.5. PERMANENT STABILIZATION MEASURES WILL BE CONSTRUCTED AND MAINTAINED IN LOCATIONS AS SHOWN ON THE CONSTRUCTION PLANS TO STABILIZE AREAS. VEGETATIVE STABILIZATION SHALL NOT BE CONSIDERED PERMANENTLY STABILIZED UNTIL VEGETATIVE GROWTH COVERS AT LEAST 85% OF THE DISTURBED AREA. THE CONTRACTOR SHALL BE RESPONSIBLE FOR EROSION AND SEDIMENT CONTROL FOR ONE YEAR AFTER PROJECT COMPLETION.
   11.6. CATCH BASINS: CARE SHALL BE TAKEN TO ENSURE THAT SEDIMENTS DO NOT ENTER ANY EXISTING CATCH BASINS DURING CONSTRUCTION. THE CONTRACTOR SHALL PLACE TEMPORARY STONE INLET PROTECTION OVER INLETS IN AREAS OF SOIL DISTURBANCE THAT ARE SUBJECT TO SEDIMENT CONTAMINATION.
   11.7. TEMPORARY AND PERMANENT DITCHES SHALL BE CONSTRUCTED, STABILIZED AND MAINTAINED IN A MANNER THAT WILL MINIMIZE SCOUR. TEMPORARY AND PERMANENT DITCHES SHALL BE DIRECTED TO DRAIN TO SEDIMENT BASINS OR STORM WATER COLLECTION AREAS.
   11.8. WINTER EXCAVATION AND EARTHWORK ACTIVITIES NEED TO BE LIMITED IN EXTENT AND DURATION, TO MINIMIZE POTENTIAL EROSION AND SEDIMENTATION IMPACTS. THE AREA OF EXPOSED SOIL SHALL BE LIMITED TO ONE ACRE, OR THAT WHICH CAN BE STABILIZED AT THE END OF EACH DAY UNLESS A WINTER CONSTRUCTION PLAN, DEVELOPED BY A QUALIFIED ENGINEER OR A CPESC SPECIALIST, IS REVIEWED AND APPROVED BY THE DEPARTMENT.
   11.9. CHANNEL PROTECTION MEASURES SHALL BE SUPPLEMENTED WITH PERIMETER CONTROL MEASURES WHEN THE DITCH LINES OCCUR AT THE BOTTOM OF LONG FILL SLOPES. THE PERIMETER CONTROLS SHALL BE INSTALLED ON THE FILL SLOPE TO MINIMIZE THE POTENTIAL FOR FILL SLOPE SEDIMENT DEPOSITS IN THE DITCH LINE.

BEST MANAGEMENT PRACTICES (BMP) BASED ON AMOUNT OF OPEN CONSTRUCTION AREA

12. STRATEGIES SPECIFIC TO OPEN AREAS LESS THAN 5 ACRES:
   12.1. THE CONTRACTOR SHALL COMPLY WITH RSA 485:A:17 AND ENV-WQ 1500; ALTERATION OF TERRAIN FOR CONSTRUCTION AND USE ALL CONVENTIONAL BMP STRATEGIES.
   12.2. SLOPES STEEPER THAN 3:1 WILL RECEIVE TURF ESTABLISHMENT WITH MATTING.
   12.3. SLOPES 3:1 OR FLATTER WILL RECEIVE TURF ESTABLISHMENT ALONE.
   12.4. AREAS WHERE HAUL ROADS ARE CONSTRUCTED AND STORMWATER CANNOT BE TREATED THE DEPARTMENT WILL CONSIDER INFILTRATION.
   12.5. FOR HAUL ROADS ADJACENT TO SENSITIVE ENVIRONMENTAL AREAS OR STEEPER THAN 5%, THE DEPARTMENT WILL CONSIDER USING EROSION STONE, CRUSHED GRAVEL, OR CRUSHED STONE BASE TO HELP MINIMIZE EROSION ISSUES.
   12.6. ALL AREAS THAT CAN BE STABILIZED SHALL BE STABILIZED PRIOR TO OPENING UP NEW TERRITORY.
   12.7. DETENTION BASINS SHALL BE DESIGNED AND CONSTRUCTED TO ACCOMMODATE A 2 YEAR STORM EVENT.

13. STRATEGIES SPECIFIC TO OPEN AREAS BETWEEN 5 AND 10 ACRES:
   13.1. THE CONTRACTOR SHALL COMPLY WITH RSA 485:A:17 AND ENV-WQ 1500 ALTERATION OF TERRAIN AND SHALL USE CONVENTIONAL BMP STRATEGIES AND ALL TREATMENT OPTIONS USED FOR UNDER 5 ACRES WILL BE UTILIZED.
   13.2. DETENTION BASINS WILL BE CONSTRUCTED TO ACCOMMODATE THE 2-YEAR 24-HOUR STORM EVENT AND CONTROL A 10-YEAR 24-HOUR STORM EVENT.
   13.3. SLOPES STEEPER THAN A 3:1 WILL RECEIVE TURF ESTABLISHMENT WITH MATTING OR OTHER TEMPORARY SOIL STABILIZATION MEASURES DETAILED IN TABLE 1. THE CONTRACTOR MAY ALSO CONSIDER A SOIL BINDER IN ACCORDANCE WITH THE NHDES APPROVALS OR REGULATIONS. OTHER ALTERNATIVE MEASURES, SUCH AS BONDED FIBER MATRIXES (BFMS) OR FLEXIBLE GROWTH MEDIUMS (FGMS) MAY BE UTILIZED, IF MEETING THE NHDES APPROVALS AND REGULATIONS.
   13.4. SLOPES 3:1 OR FLATTER WILL RECEIVE TURF ESTABLISHMENT OR OTHER TEMPORARY SOIL STABILIZATION MEASURES DETAILED IN TABLE 1. THE CONTRACTOR MAY ALSO CONSIDER A SOIL BINDER IN ACCORDANCE WITH THE NHDES APPROVALS OR REGULATIONS.

14. STRATEGIES SPECIFIC TO OPEN AREAS OVER 10 ACRES:
   14.1. THE CONTRACTOR SHALL COMPLY WITH RSA 485:A:17 AND ENV-WQ 1500 ALTERATION OF TERRAIN AND SHALL USE CONVENTIONAL BMP STRATEGIES AND ALL TREATMENT OPTIONS USED FOR UNDER 5 ACRES AND BETWEEN 5 AND 10 ACRES WILL BE UTILIZED.
   14.2. THE DEPARTMENT ANTICIPATES THAT SOIL BINDERS WILL BE NEEDED ON ALL SLOPES STEEPER THAN 3:1, IN ORDER TO MINIMIZE EROSION AND REDUCE THE AMOUNT OF SEDIMENT IN THE STORMWATER TREATMENT BASINS.
   14.3. THE CONTRACTOR WILL BE REQUIRED TO HAVE AN APPROVED DESIGN IN ACCORDANCE WITH ENV-WQ 1506.12 FOR AN ACTIVE FLOCCULANT TREATMENT SYSTEM TO TREAT AND RELEASE WATER CAPTURED IN STORM WATER BASINS. THE CONTRACTOR SHALL ALSO RETAIN THE SERVICES OF AN ENVIRONMENTAL CONSULTANT WHO HAS DEMONSTRATED EXPERIENCE IN THE DESIGN OF FLOCCULANT TREATMENT SYSTEMS. THE CONSULTANT WILL ALSO BE RESPONSIBLE FOR THE IMPLEMENTATION AND MONITORING OF THE SYSTEM.

TABLE 1
GUIDANCE ON SELECTING TEMPORARY SOIL STABILIZATION MEASURES

APPLICATION AREAS	DRY MULCH METHODS				HYDRAULICALLY APPLIED MULCHES[2]				ROLLED EROSION CONTROL BLANKETS[3]			
	HMT	WC	SG	CB	HM	SMM	BFM	FRM	SNSB	DNSB	DNSCB	DNCB
SLOPES[1]												
STEEPER THAN 2:1	NO	NO	YES	NO	NO	NO	NO	YES	NO	NO	NO	YES
2:1 SLOPE	YES'	YES'	YES	YES	NO	NO	YES	YES	NO	YES	YES	YES
3:1 SLOPE	YES	YES	YES	YES	NO	YES	YES	YES	YES	YES	YES	NO
4:1 SLOPE	YES	YES	YES	YES	YES	YES	YES	YES	YES	YES	NO	NO
WINTER STABILIZATION	4T/AC	YES	YES	YES	NO	NO	YES	YES	YES	YES	YES	YES
CHANNELS												
LOW FLOW CHANNELS	NO	NO	NO	NO	NO	NO	NO	NO	NO	NO	YES	YES
HIGH FLOW CHANNELS	NO	NO	NO	NO	NO	NO	NO	NO	NO	NO	NO	YES

ABBREV.	STABILIZATION MEASURE	ABBREV.	STABILIZATION MEASURE	ABBREV.	STABILIZATION MEASURE
HMT	HAY MULCH & TACK	HM	HYDRAULIC MULCH	SNSB	SINGLE NET STRAW BLANKET
WC	WOOD CHIPS	SMM	STABILIZED MULCH MATRIX	DNSB	DOUBLE NET STRAW BLANKET
SG	STUMP GRINDINGS	BFM	BONDED FIBER MATRIX	DNSCB	2 NET STRAW-COCONUT BLANKET
CB	COMPOST BLANKET	FRM	FIBER REINFORCED MEDIUM	DNCB	2 NET COCONUT BLANKET

NOTES:
1. ALL SLOPE STABILIZATION OPTIONS ASSUME A SLOPE LENGTH ≤10 TIMES THE HORIZONTAL DISTANCE COMPONENT OF THE SLOPE, IN FEET.
2. PRODUCTS CONTAINING POLYACRYLAMIDE (PAM) SHALL NOT BE APPLIED DIRECTLY TO OR WITHIN 100 FEET OF ANY SURFACE WATER WITHOUT PRIOR WRITTEN APPROVAL FROM THE NH DEPARTMENT OF ENVIRONMENTAL SERVICES.
3. ALL EROSION CONTROL BLANKETS SHALL BE MADE WITH WILDLIFE FRIENDLY BIODEGRADABLE NETTING.

STATE OF NEW HAMPSHIRE

DEPARTMENT OF TRANSPORTATION ∘ BUREAU OF HIGHWAY DESIGN

EROSION CONTROL STRATEGIES

REVISION DATE	DGN	STATE PROJECT NO.	SHEET NO.	TOTAL SHEETS
12-21-2015	21832erosstrat	21832	6	7

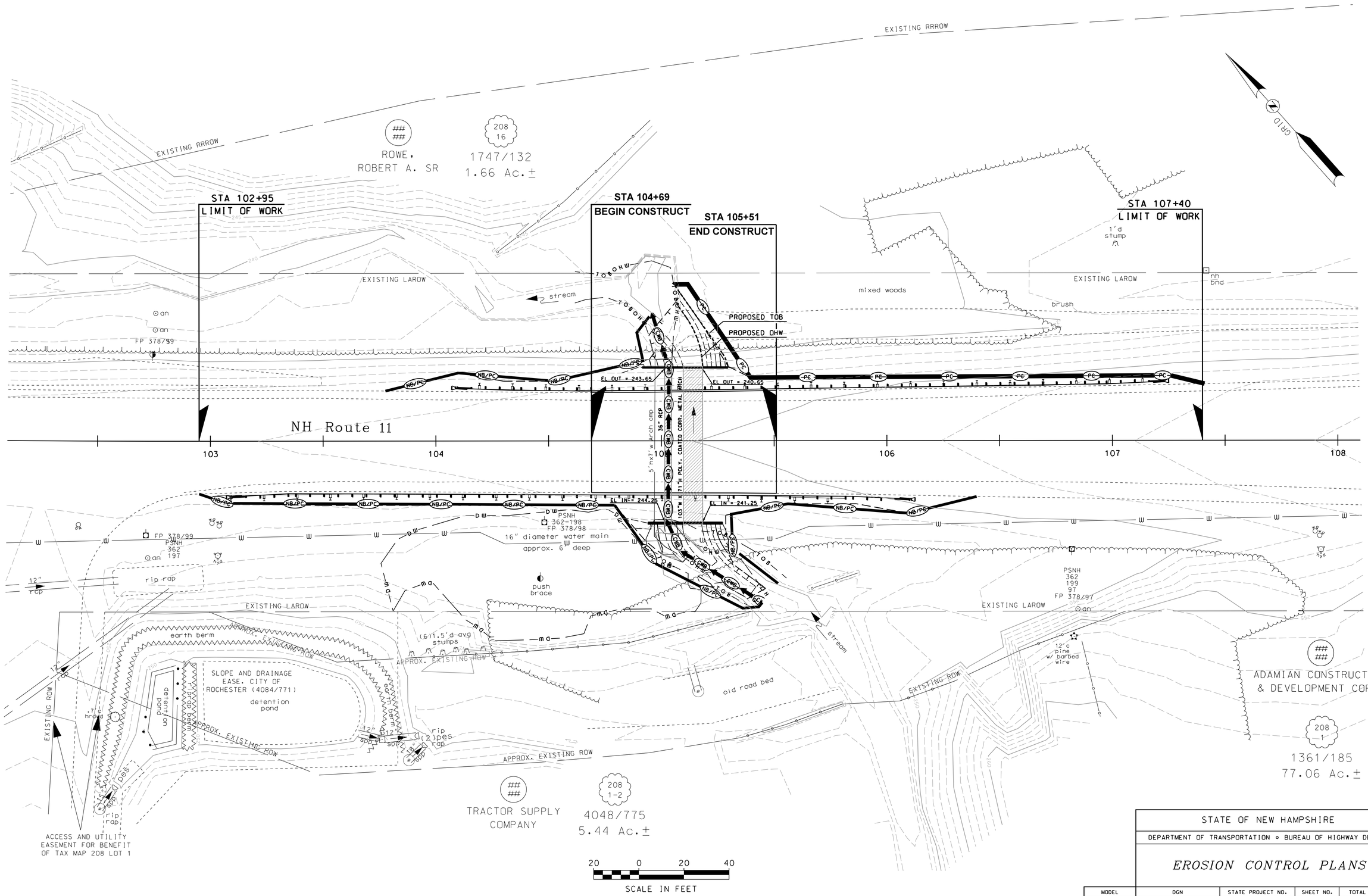

NUMBER	DATE	STATION	STATION	DESCRIPTION

REVISIONS AFTER PROPOSAL

SDR PROCESSED		DATE	
NEW DESIGN	L. SAVAGE	DATE	04/2017
SHEET CHECKED	NAME3	DATE	DATE3
AS BUILT DETAILS		DATE	

STATE OF NEW HAMPSHIRE

DEPARTMENT OF TRANSPORTATION ∘ BUREAU OF HIGHWAY DESIGN

EROSION CONTROL PLANS

MODEL	DGN	STATE PROJECT NO.	SHEET NO.	TOTAL SHEETS
ERC01	21832WET	21832	7	7