STATE OF NEW HAMPSHIRE
DEPARTMENT OF TRANSPORTATION

WETLAND IMPACT PLANS
FEDERAL AID PROJECT

INSTALLATION OF A FLOATING DOCK

associated with the replacement of Bridge No. 251/108
between Portsmouth, NH and Kittery, ME
Federal Project No. A000(909)
NH Project No. 15731

INDEX OF SHEETS

1	WETLAND PLANS COVER SHEET
2-3	STANDARD SYMBOLS SHEETS
4	WETLAND SUMMARY SHEET
5-7	WETLAND IMPACT PLANS

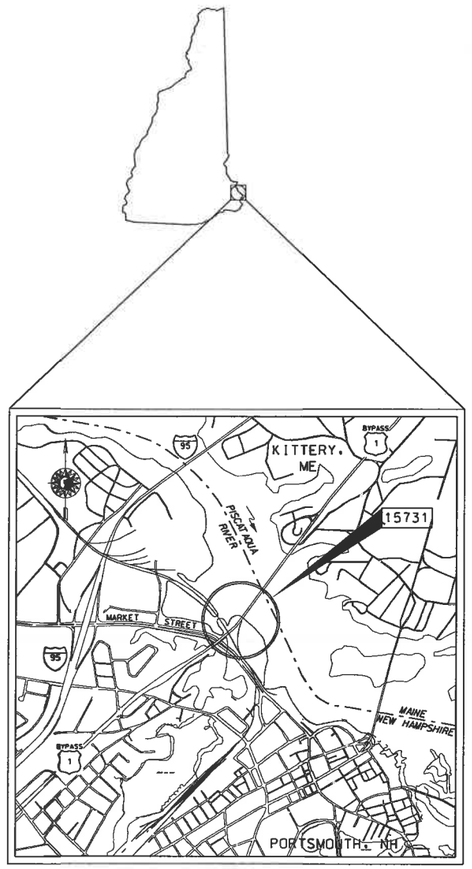

LOCATION MAP

1/2 1/4 0 1/2 1 mi.

GRAPHIC SCALE

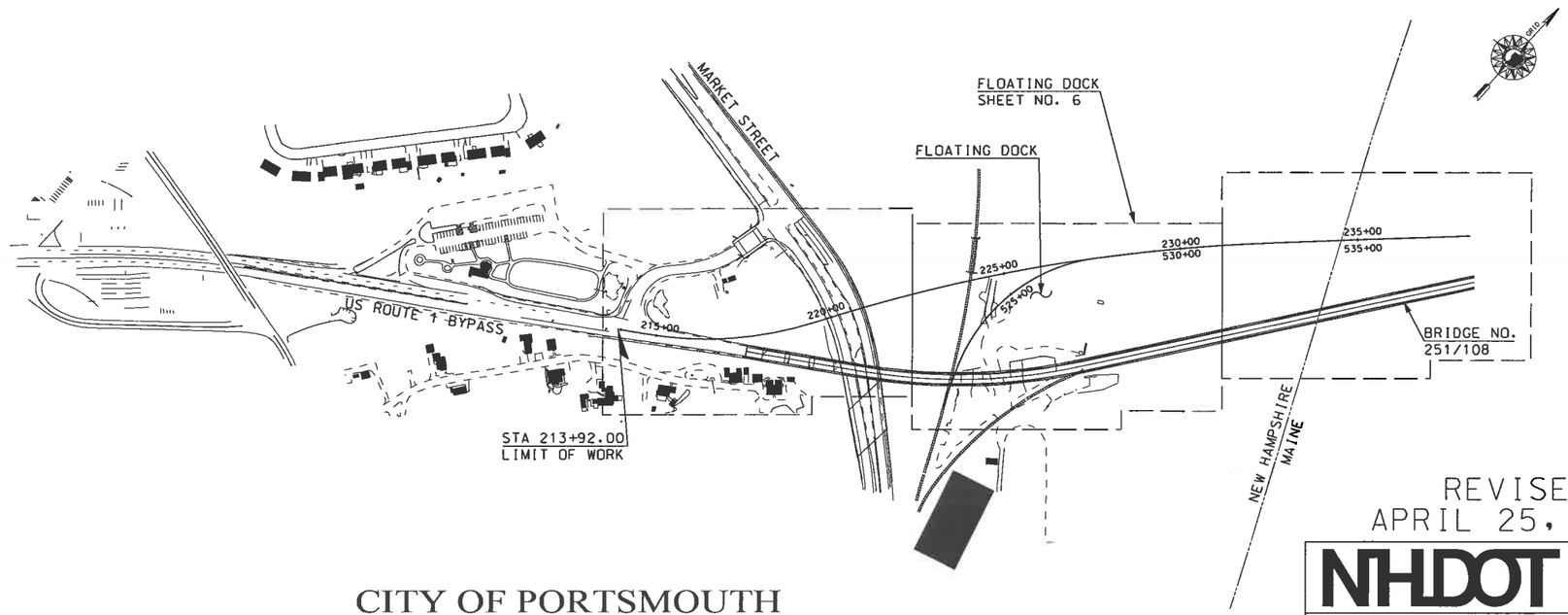

REVISED
APRIL 25, 2018

CITY OF PORTSMOUTH
COUNTY OF ROCKINGHAM

SCALE = 1" = 200'

FOR CONSTRUCTION DETAILS - SEE CONSTRUCTION PLANS

NHDOT THE STATE OF NEW HAMPSHIRE DEPARTMENT OF TRANSPORTATION

RECOMMENDED FOR APPROVAL:

DIRECTOR OF PROJECT DEVELOPMENT — DATE

APPROVED:

ASSISTANT COMMISSIONER AND CHIEF ENGINEER — DATE

U. S. DEPARTMENT OF TRANSPORTATION
FEDERAL HIGHWAY ADMINISTRATION

APPROVED:

DIVISION ADMINISTRATOR — DATE

FEDERAL PROJECT NO.	STATE PROJECT NO.	SHEET NO.	TOTAL SHEETS
A000(909)	15731	1	7

DRAWN BY MAL DATE 01/2014
CHECKED BY VPC DATE 02/2014

GENERAL

	PROPOSED ROADWAY	existing roadway	(pavement removed outside slope lines)
EDGE OF PAVEMENT			
TRAVELED WAY			

DRIVEWAYS — (label surface type)

BUILDINGS — (building to be removed) — (label house or type of building)

FOUNDATION — (label type)

LEACH FIELD — leach field

BRIDGE CROSSINGS — STREAM — OVERPASS

STEPS AND WALK — (label type)

INTERMITTENT WATER COURSE

SHORE LINE — river/stream — pond — (label name of water body)

POTENTIAL WET AREA SYMBOL

BRUSH OR WOODS LINE

TREES (PLANS) — (deciduous) (coniferous) (stump)

TREE OR STUMP (CROSS-SECTIONS) — (show station, circumference in feet & type)

HEDGE — (label type)

MONITORING WELL — mon

WELL

FLAG POLE — fp

ORIGINAL GROUND (TYPICALS)

ROCK OUTCROP

ROCK LINE (TYPICALS & SECTIONS ONLY)

	existing	PROPOSED
GUARDRAIL (label type)	bgr, cgr	
JERSEY BARRIER		
CURB (LABEL TYPE)		
STONE WALL		
RETAINING WALL (LABEL TYPE)		(points toward retained ground)
FENCE (LABEL TYPE)		

SIGNS — (single post) — (double post)

GAS PUMP — gp

FUEL TANK (ABOVE GROUND) — ft (label size & type)

STORAGE TANK FILLER CAP — fc

SEPTIC TANK — S

GRAVE — gr

MAILBOX — mb

VENT PIPE — vp

SATELLITE DISH ANTENNA — da

PHONE — ph

GROUND LIGHT/LAMP POST — gl — lp

BORING LOCATION — B

TEST PIT — TP

INTERSTATE NUMBERED HIGHWAY — 293

UNITED STATES NUMBERED HIGHWAY — 3

STATE NUMBERED HIGHWAY — 102

SHORELAND - WETLAND

WETLAND DESIGNATION AND TYPE — 2 PUB2E

DELINEATED WETLAND — DW
ORDINARY HIGH WATER — OHW
TOP OF BANK — TOB
TOP OF BANK & ORDINARY HIGH WATER — TOBOHW
NORMAL HIGH WATER — NHW
WIDTH AT BANK FULL — WBF
PRIME WETLAND — PWET
PRIME WETLAND 100' BUFFER — PWET100
NON-JURISDICTIONAL DRAINAGE AREA — NJDA
COWARDIN DISTINCTION LINE — CDL
TIDAL BUFFER ZONE — TBZ
DEVELOPED TIDAL BUFFER ZONE — DTBZ
HIGHEST OBSERVABLE TIDE LINE — HOTL
MEAN HIGH WATER — MHW
MEAN LOW WATER — MLW
VERNAL POOL — VP
SPECIAL AQUATIC SITE — SAS
REFERENCE LINE — REF
WATER FRONT BUFFER — WB50
NATURAL WOODLAND BUFFER — NWB150
PROTECTED SHORELAND — PS250
INVASIVE SPECIES LABEL — I.S. I — I.S. II
INVASIVE SPECIES — INV

FLOODPLAIN / FLOODWAY

500 YEAR FLOODPLAIN BOUNDARY — FP500
100 YEAR FLOODPLAIN BOUNDARY — FP100
FLOODWAY — FW

ENGINEERING

CONSTRUCTION BASELINE — 30 31 32

PC, PT, POT (ON CONST BASELINE)

PI (IN CONSTRUCTION BASELINES)

INTERSECTION OR EQUATION OF TWO LINES

ORIGINAL GROUND LINE (PROFILES AND CROSS-SECTIONS)

PROFILE GRADE LINE (PROFILES AND CROSS-SECTIONS)

CLEARING LINE — SLOPE LINE — CLEARING LINE

SLOPE LINE

SLOPE LINE (FILL)

SLOPE LINE (CUT)

PROFILES AND CROSS SECTIONS:
ORIGINAL GROUND ELEVATION (LEFT) — 72.5
FINISHED GRADE ELEVATION (RIGHT) — 79.14

SHEET 1 OF 2

STATE OF NEW HAMPSHIRE
DEPARTMENT OF TRANSPORTATION • BUREAU OF HIGHWAY DESIGN

STANDARD SYMBOLS

REVISION DATE	DGN	STATE PROJECT NO.	SHEET NO.	TOTAL SHEETS
11-21-2014	16710sym12.dgn	15731	2	7

DRAINAGE

	(existing)	(PROPOSED)
MANHOLE		
CATCH BASIN	cb	
DROP INLET	di	

DRAINAGE PIPE (existing)		(label size & type)
DRAINAGE PIPE (PROPOSED)		
UNDERDRAIN (existing) W/ FLUSHING BASIN	fb	(label size & type)
UNDERDRAIN (PROPOSED) W/ FLUSHING BASIN		
HEADER (existing & PROPOSED)		(with stone outlet protection)
END SECTION (existing & PROPOSED)		METAL or PLASTIC
		RCP
OPEN DITCH (PROPOSED)		
EROSION CONTROL/ STONE SLOPE PROTECTION		

show direction of flow

BOUNDARIES / RIGHT-OF-WAY

RIGHT-OF-WAY LINE		(label type)
RR RIGHT-OF-WAY LINE		
PROPERTY LINE		
PROPERTY LINE (COMMON OWNER)	Z	
TOWN LINE	BOW / CONCORD	
COUNTY LINE	COOS / GRAFTON	
STATE LINE	MAINE / NEW HAMPSHIRE	
NATIONAL FOREST		
CONSERVATION LAND	LC	
BENCH MARK / SURVEY DISK		
BOUND	bnd	(PROPOSED)
STATE LINE/ TOWN LINE MONUMENT	S/L	T/L
NHDOT PROJECT MARKER		
IRON PIPE OR PIN	ip	
DRILL HOLE IN ROCK	dh	
TAX MAP AND LOT NUMBER	156 14 — 1642/341 6.80 Ac.±	
PROPERTY PARCEL NUMBER	12	
HISTORIC PROPERTY	H	

UTILITIES

	existing	PROPOSED
TELEPHONE POLE		
POWER POLE		
JOINT OCCUPANCY		
MISCELLANEOUS/UNKNOWN POLE		
GUY POLE OR PUSH BRACE		
LIGHT POLE		
LIGHT ON POWER POLE		
LIGHT ON JOINT POLE		

(plot point at face not center of symbol)

POLE STATUS:
REMOVE, LEAVE, PROPOSED, OR TEMPORARY AS APPLICABLE e.g.:

R L P+04 25.0' T+04 25.0'

RAILROAD	(label ownership)	
RAILROAD SIGN		
RAILROAD SIGNAL		
UTILITY JUNCTION BOX	jb	JB
OVERHEAD WIRE	OW (label type)	OW

UNDERGROUND UTILITIES

WATER (on existing lines label size, type and note if abandoned)	W	PW
SEWER	S	PS
TELEPHONE	T	PT
ELECTRIC	E	PE
GAS	G	PG
LIGHTING	L	PL
INTELLIGENT TRANSPORTATION SYSTEM	ITS	PITS
FIBER OPTIC	FO	PFO
WATER SHUT OFF	WSO	WSO
GAS SHUT OFF	GSO	GSO
HYDRANT	HYD	HYD

MANHOLES

SEWER	S	MHS
TELEPHONE	T	MHT
ELECTRICAL	E	MHE
GAS	G	MHG
UNKNOWN	U	

TRAFFIC SIGNALS / ITS

	existing	PROPOSED
MAST ARM (existing)		30' MA (NOTE ANGLE FROM ℄)
OPTICOM RECEIVER		
OPTICOM STROBE		
TRAFFIC SIGNAL		
PEDESTAL WITH PEDESTRIAN SIGNAL HEADS AND PUSH BUTTON UNIT		
SIGNAL CONDUIT	C	PC
CONTROLLER CABINET	cc	CC
METER PEDESTAL	mp	MP
PULL BOX	pb	PB
LOOP DETECTOR (QUADRUPOLE)		(label size)
LOOP DETECTOR (RECTANGULAR)		(label size)
CAMERA POLE (CCTV)		
FIBER OPTIC DELINEATOR	fod	FOD
FIBER OPTIC SPLICE VAULT		SVF
ITS EQUIPMENT CABINET	its	ITS
VARIABLE SPEED LIMIT SIGN		
DYNAMIC MESSAGE SIGN		
ROAD AND WEATHER INFO SYSTEM		

CONSTRUCTION NOTES

CURB MARK NUMBER - BITUMINOUS	B-1
CURB MARK NUMBER - GRANITE	G-1
CLEARING AND GRUBBING AREA	A
DRAINAGE NOTE	1
EROSION CONTROL NOTE	A
FENCING NOTE	A
GUARDRAIL NOTE	1
ITS NOTE	1
LIGHTING NOTE	A
TRAFFIC SIGNAL NOTE	1

SHEET 2 OF 2

STATE OF NEW HAMPSHIRE
DEPARTMENT OF TRANSPORTATION • BUREAU OF HIGHWAY DESIGN

STANDARD SYMBOLS

REVISION DATE	DGN	STATE PROJECT NO.	SHEET NO.	TOTAL SHEETS
9-1-2016	16710sym12.dgn	15731	3	7

WETLAND IMPACT SUMMARY TABLE (Revisions shown in gray boxes)

LOC	WETLAND PLAN NO.	COWARDIN CLASSIF.	WET NO.	NHWB TBZ TEMP	NHWB TBZ PERM	NHWB TEMP	NHWB PERM	NHWB TEMP + PERM	IMPACT DESCRIPTION
A	1	E2US3	3			15,243		**15,243**	temp causeway from Market Street
B	1	E2US3	3			264		**264**	Abt 1V construction
C	1	E2US3	3			509		**509**	abutment removal
D	1	TBZ	2	19,281	9,652			**28,933**	roadway approach, retaining wall
E	1,2	TBZ	4,8	34				**34**	temporary trestle piles
F	1,2	E2US3	5,7			137		**137**	temporary trestle piles
G	1,2,3	E1UB3	6			687		**687**	temporary trestle piles
H	1	E2US3	3			236		**236**	Pier 1 removal
I	1	E2US3	3			296		**296**	Pier 2 removal
J	1	E2US3/ TBZ	3/4	318		339		**657**	Pier 3 removal legs only
K	1	TBZ	4	750				**750**	Pier 4 removal
L	1	E2US3/ TBZ	5/4	266		471		**737**	Pier 5 removal
M	1,2	E1UB3	6			441		**441**	Pier 6 removal
Q	1	E2US3	3				671	**671**	PV1 construction
R	1	E1UB3	6				672	**672**	PV2 construction
S	2	E2US1	7			665		**665**	Pier 7 removal
T	2	TBZ	8		6,698			**6,698**	rr approach and Pier 8 removal
U	2	TBZ	8		3,261			**3,261**	rr approach
V	2	E2US1	7			1,235		**1,235**	temp work causeway
W	2	TBZ	8	222				**222**	Pier 9 removal
X	2	TBZ	8	657				**657**	Pier 12 removal
Y	2	TBZ	8	830				**830**	Pier 13 removal
Z	2	E2US1	7				3,776	**3,776**	rr approach
AA	2	E1UB3/ E2US1	6/7				672	**672**	PV3 construction
BB	2	E1UB3/ E2US1	6/7				1,700	**1,700**	boat ramp construction
BB_A1	2	E1UB3/ E2US1	6/7				663	**663**	Grading for boat ramp
BB_A2	2	E1UB3/ E2US1	6/7				20	**20**	Grading for boat ramp
BB_A3	2	E1UB3/ E2US1	6/7				704	**704**	Grading for boat ramp
CC	2	E2US1	7				1,500	**1,500**	RR Abutment
DD	2	E1UB3	6				79	**79**	PR4 construction - 1 - 10' drilled shaft

WETLAND IMPACT SUMMARY TABLE, CONTINUED

LOC	WETLAND PLAN NO.	COWARDIN CLASSIF.	WET NO.	NHWB TBZ TEMP	NHWB TBZ PERM	NHWB TEMP	NHWB PERM	NHWB TEMP + PERM	IMPACT DESCRIPTION
EE	2	E1UB3	6				675	**675**	PS5 construction - 2 - 10' drilled shafts - pier cap
FF	2	E1UB3	6				79	**79**	PR6 construction 1 - 10' drilled shaft
GG	2	E1UB3	6				675	**675**	PS7 construction - 2 - 10' drilled shafts - pier cap
JJ	1	PEM1EX	1	724	347	1,028	1,480	**3,579**	treatment swale construction
KK	2,3	E1UB3	6			1,520		**1,520**	P16 removal
LL	3	E1UB3	6			1,915		**1,915**	P17 removal
MM	3	E1UB3	6				79	**79**	PR8 construction 1 - 10' drilled shaft
NN	3	E1UB3	6				7,598	**7,598**	Fender footprint over drilled shafts
OO	2	E2US1	7			236		**236**	Temp impact Pier 13 removal
PP	2	TBZ	8		1,619			**1,619**	boat ramp construction
PP_A1	2	TBZ	8		858			**858**	Grading for boat ramp
PP_A2	2	TBZ	8		669			**669**	Grading for boat ramp
RR	2	E1UB3	6			600		**600**	temp impact Pier 14 removal
SS	2	E1UB3	6			1,560		**1,560**	temp impact Pier 15 removal
TT	1	TBZ	4	293				**293**	temp causeway Cutts Cove
UU	1	E2US1	5			1,112		**1,112**	Access demolition
VV	1	E2US1	5			417		**417**	Access construction
WW	1	TBZ	4	1,384				**1,384**	temp causeway North Mill Pond
XX	2	E2US1	7			1,338		**1,338**	temp causeway west of RR tracks
YY	2	TBZ	2	516				**516**	temp causeway west of RR tracks
ZZ	2	TBZ	8	710				**710**	temp causeway off railroad
AAA	2	TBZ	8	426				**426**	temp causeway off railroad
BBB	2	E2US1	7			108		**108**	temp causeway off railroad
CCC	3	E1UB3	6				2,234	**2,234**	submarine cables dredge and fill to depth
DDD	3	E1UB3	6				854	**854**	submarine cables concrete mat
FFF	1	E2US3	3			256		**256**	PV1 within cofferdam
GGG	1	E1UB3	6			348		**348**	PV2 within cofferdam
HHH	2	E1UB3	6			256		**256**	PV3 within cofferdam
III	3	E1UB3	6				808	**808**	submarine cable (south)
JJJ	3	E1UB3	6				2,872	**2,872**	rubble pile removal
~~LLL~~	~~2~~	~~E1UB3/ E2US1~~	~~6/7~~				~~5~~	~~**5**~~	~~Guide pile for floating dock~~
MMM	2	E1UB3/ E2US1	6/7				173	**178**	Floating dock (portion that is not located over previously identified impact areas)
				26,411		**31,217**		**57,628**	**TOTAL TEMPORARY IMPACT (SQUARE FEET)**
					23,104		**27,994**	**51,098**	**TOTAL PERMANENT IMPACT (SQUARE FEET)**
								108,726	**TOTAL IMPACT, TEMPORARY AND PERMANENT (SQUARE FEET)**
				0.61	**0.50**	**0.64**	**0.64**	**2.49**	**TOTAL IMPACT ACRES**

TIDAL WETLAND RESTORATION

N	1	E2US3	3	208	Pier 1 removal
O	1	E2US3	3	243	Pier 2 removal
P	1	E1UB3	6	243	Pier 6 removal
HH	2	E1UB3/ E2US3	6/7	9,057	Barge wharf removal (does not include new boat ramp and railroad abutment areas)
QQ	2	E1UB3	6	720	P15 removal
EEE	2	E2US1	7	952	boat ramp removal
				10,423	**TOTAL TIDAL WETLANDS RESTORED (SQUARE FEET)**

REVISIONS AFTER PROPOSAL

NUMBER	DATE	STATION	STATION	DESCRIPTION

SDR PROCESSED	MEDOT	DATE	
NEW DESIGN	MEDOT	DATE	
SHEET CHECKED	VPC	DATE	01/2014
AS BUILT DETAILS		DATE	

REVISED 4/25/18

McFarland Johnson

STATE OF NEW HAMPSHIRE

DEPARTMENT OF TRANSPORTATION • BUREAU OF HIGHWAY DESIGN

WETLAND IMPACT SUMMARY

DGN	STATE PROJECT NO.	SHEET NO.	TOTAL SHEETS
wetsum.dgn	15731	4	7

LEGEND

TYPE OF WETLAND IMPACT	SHADING/ HATCHING
IMPACT "CREDIT"	
NEW HAMPSHIRE WETLANDS BUREAU & ARMY CORP OF ENGINEERS (PERMANENT WETLAND)	
TEMPORARY IMPACTS	

TIDAL BUFFER ZONE IMPACT	

WETLAND DESIGNATION NUMBER

WETLAND IMPACT LOCATION

MEAN ORDINARY LOW WATER — MOLW —

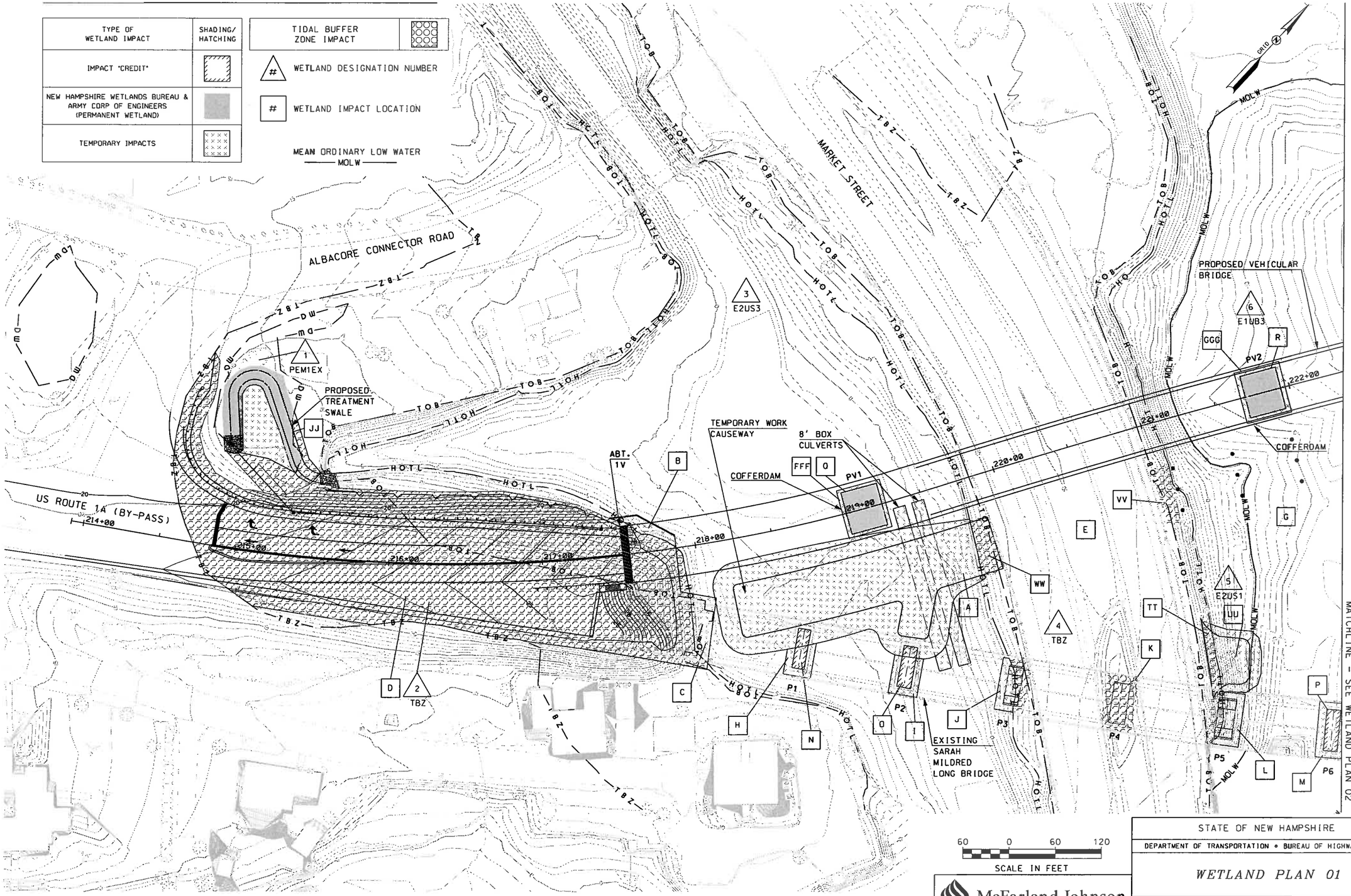

60 0 60 120
SCALE IN FEET

McFarland Johnson

STATE OF NEW HAMPSHIRE

DEPARTMENT OF TRANSPORTATION • BUREAU OF HIGHWAY DESIGN

WETLAND PLAN 01

DGN	STATE PROJECT NO.	SHEET NO.	TOTAL SHEETS
wetland01	15731	5	7

REVISIONS AFTER PROPOSAL

NUMBER	DATE	STATION	STATION	DESCRIPTION

		DATE
SDR PROCESSED	MEDOT	
NEW DESIGN	MEDOT	DATE
SHEET CHECKED	VPC	DATE 01/2014
AS BUILT DETAILS		DATE

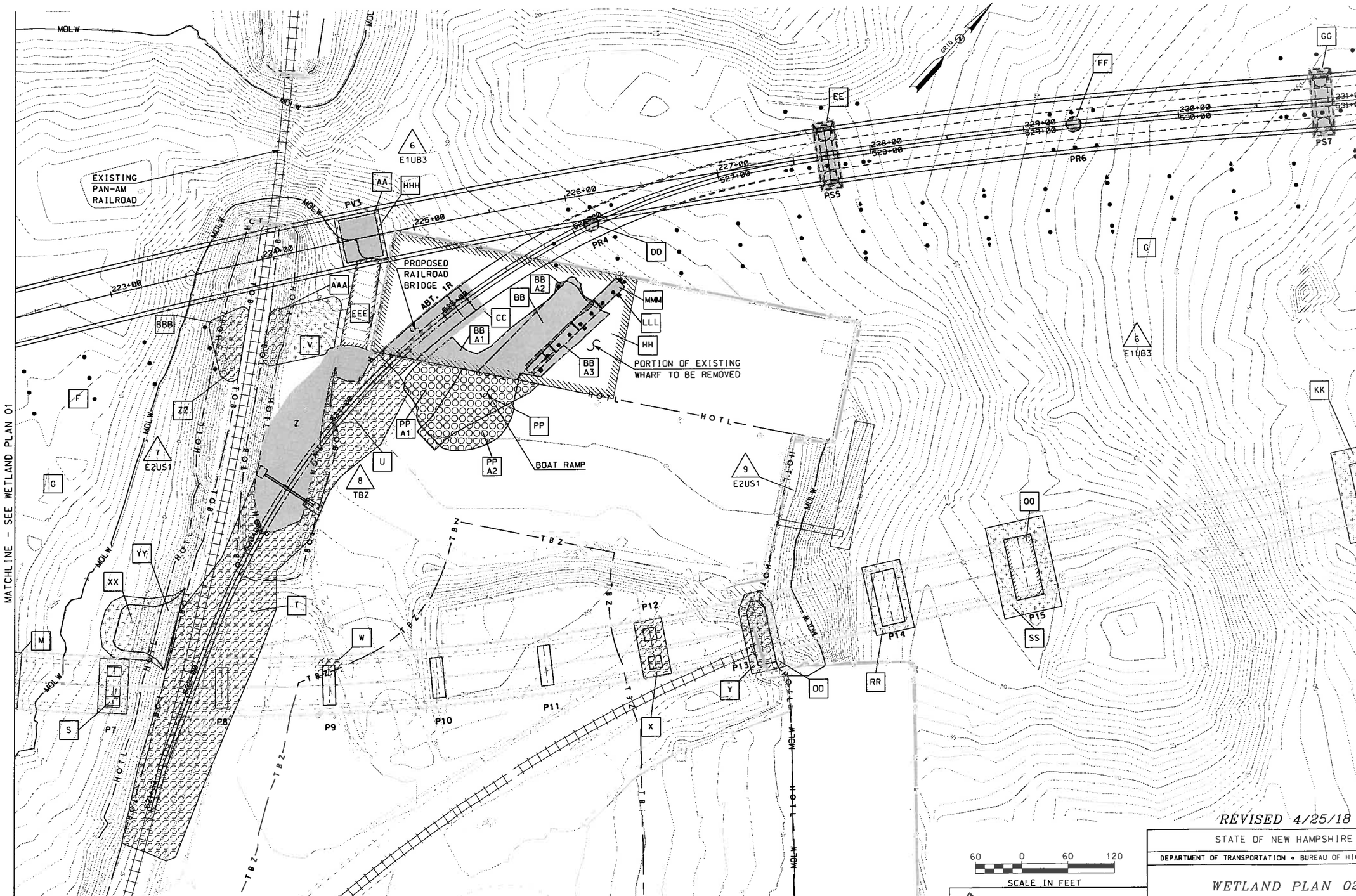

REVISED 4/25/18

STATE OF NEW HAMPSHIRE

DEPARTMENT OF TRANSPORTATION • BUREAU OF HIGHWAY DESIGN

WETLAND PLAN 02

McFarland Johnson

DGN	STATE PROJECT NO.	SHEET NO.	TOTAL SHEETS
wetland02	15731	6	7

REVISIONS AFTER PROPOSAL

NUMBER	DATE	STATION	STATION	DESCRIPTION

SDR PROCESSED MEDOT DATE

NEW DESIGN MEDOT DATE

SHEET CHECKED VPC DATE 01/2014

AS BUILT DETAILS DATE

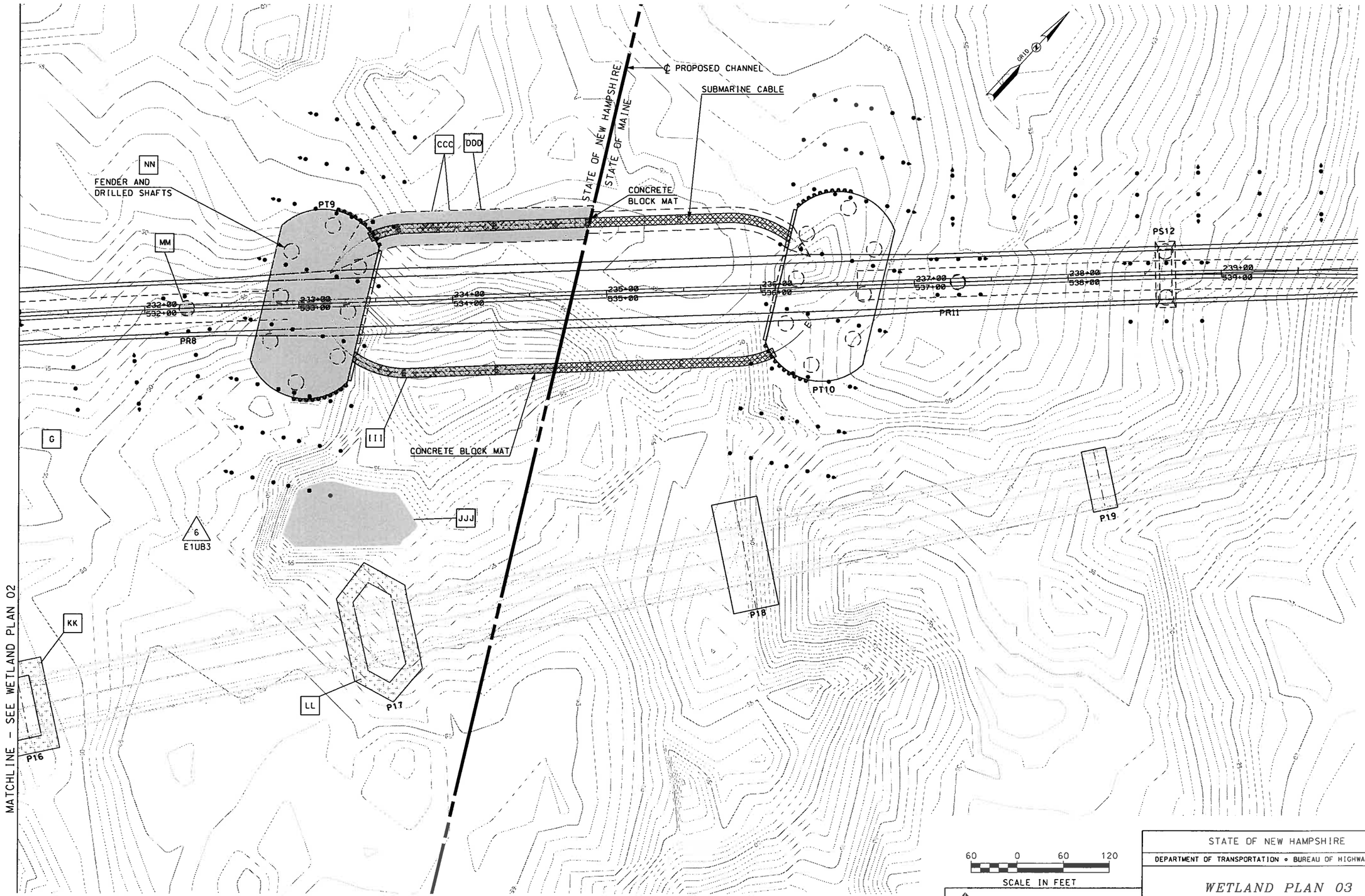

McFarland Johnson

STATE OF NEW HAMPSHIRE

DEPARTMENT OF TRANSPORTATION • BUREAU OF HIGHWAY DESIGN

WETLAND PLAN 03

DGN	STATE PROJECT NO.	SHEET NO.	TOTAL SHEETS
wetland03	15731	7	7

REVISIONS AFTER PROPOSAL

NUMBER	DATE	STATION	STATION	DESCRIPTION

SDR PROCESSED	MEDOT	DATE
NEW DESIGN	MEDOT	DATE
SHEET CHECKED	VPC	DATE 01/2014
AS BUILT DETAILS		DATE

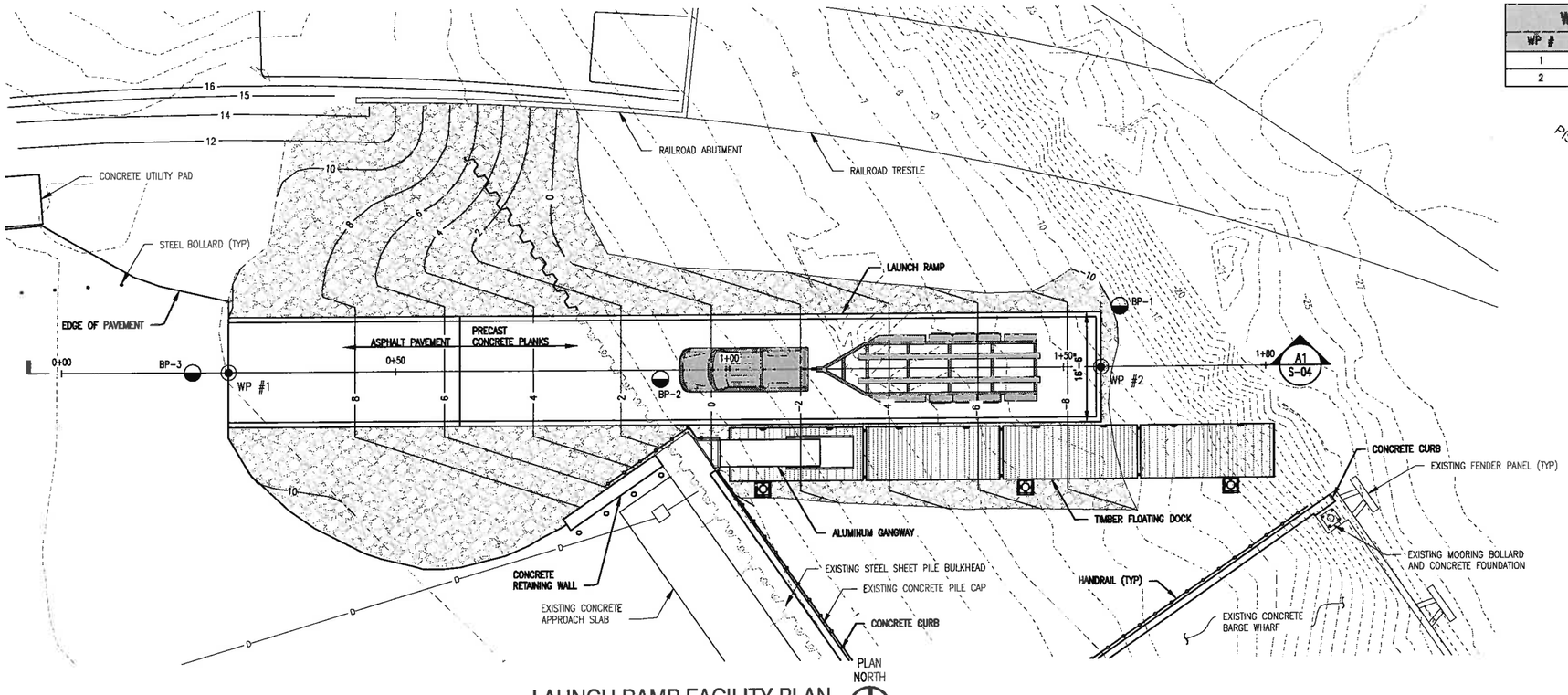

LAUNCH RAMP FACILITY PLAN

SCALE: 1"=10'-0" (0, 10', 20')

WORKING POINT COORDINATES			
WP #	STATION	NORTHING	EASTING
1	0+25	91733.4	880555.3
2	1+55.6	91853.7	880564.1

LEGEND:

- EXISTING 5 FOOT CONTOUR
- EXISTING 1 FOOT CONTOUR
- 2 FOOT FINISHED CONTOUR
- EXISTING DRAINAGE
- EXISTING CATCH BASIN
- BORING LOG LOCATION
- WORKING POINT
- 0+00 STATION DESIGNATION
- HANDRAIL

APPROXIMATE VOLUME QUANTITIES	
CUT	630 CY
ASPHALT	15 CY
CONCRETE	50 CY
SUBBASE	130 CY
RIPRAP	135 CY

VOLUME QUANTITIES ARE VOLUMES AROUND LAUNCH RAMP AND FLOATING DOCK ONLY.

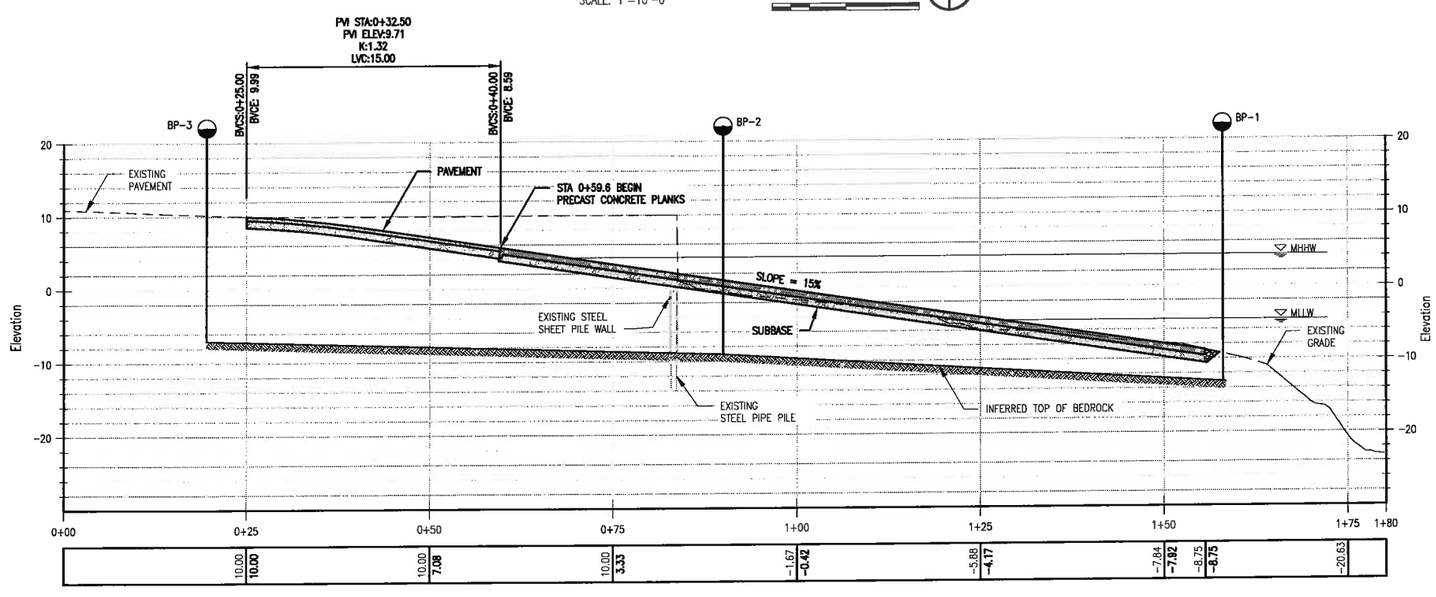

LAUNCH RAMP PROFILE

SCALE: 1"=10' (0, 10', 20') S-04 A1

REVISION	DATE	DESCRIPTION	BY
1			
1			
1			
1			

REVISIONS

Appledore Marine Engineering, LLC
600 Saint St. Suite E
Portsmouth New Hampshire 03801
603.766.1970
inquiry@appledoremarine.com

SUBMITTED BY:
(SIGNED)
TITLE
DATE

STATE OF NEW HAMPSHIRE
NOAH ELDRIDGE
No 10534
LICENSED PROFESSIONAL ENGINEER
(SEAL)

PEASE DEVELOPMENT AUTHORITY
DIVISION OF PORTS AND HARBORS, 555 MARKET STREET, PORTSMOUTH, NH
MARKET STREET MARINE TERMINAL
PORTSMOUTH, NH

LAUNCH RAMP FACILITY

LAUNCH RAMP PLAN AND PROFILE

PROJECT No.:	1989V
CAD DWG FILE:	1989V 02 Ramp.dwg
DESIGNED BY:	ETL
DRAWN BY:	SNB
CHECKED BY:	NJE
SCALE:	AS SHOWN

S-04

SHEET 12 OF 21

CHECK GRAPHIC SCALES BEFORE USING.

DRAWING NAME: 1989V 02 Ramp.dwg Date Plotted: Nov 12, 2014 - 3:19pm Plotted By: DMARCOTTE

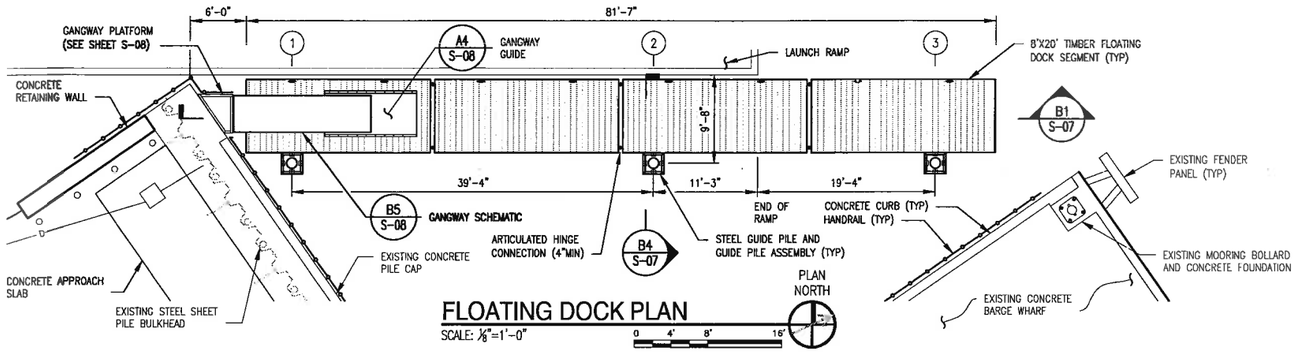

FLOATING DOCK PLAN

SCALE: 1/8"=1'-0" 0 4' 8' 16'

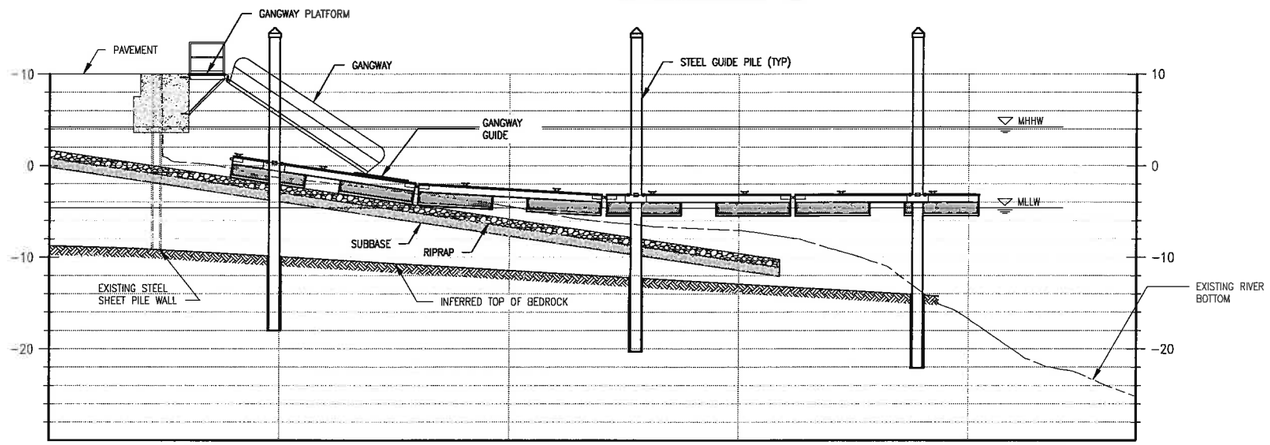

FLOATING DOCK PROFILE

SCALE: 1/8"=1'-0" 0 4' 8' 16' S-07 B1

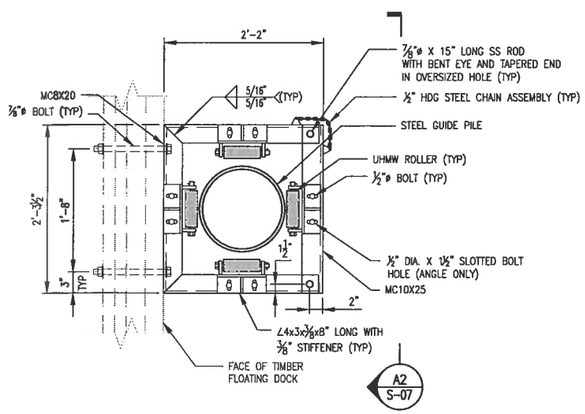

PILE GUIDE ASSEMBLY DETAIL

SCALE:1/32" = 1'-0" 0 24' 48' 72' S-07 A1

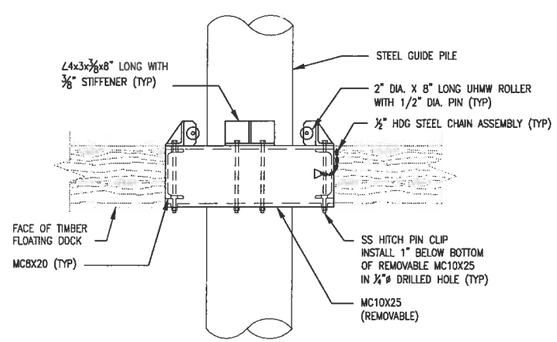

PILE GUIDE ASSEMBLY SECTION

SCALE:1/32" = 1'-0" 0 24' 48' 72' S-07 A2

NOTES:

1. FLOATING DOCK MANUFACTURER IS RESPONSIBLE FOR DESIGN OF FLOATING DOCKS. HOWEVER MEMBER SIZES AND FASTENERS SHOWN SHALL BE THE MINIMUM ACCEPTED SIZE.
2. INTERIOR CORNER CONNECTIONS FOR BEAMS SHALL CONSIST OF L5X5X1/2" X 6" LONG ANGLES WITH (2) 1/2"ø THRU BOLTS PER FLANGE.
3. STRINGER TO BEAM CONNECTIONS SHALL CONSIST OF (2) L5X5X1/2" X 6" LONG ANGLES WITH (2) 1/2"ø THRU BOLTS PER FLANGE.
4. MOORING CLEATS AND RUBRAILS TO BE INSTALLED IN ACCORDANCE WITH MANUFACTURER'S INSTRUCTIONS.

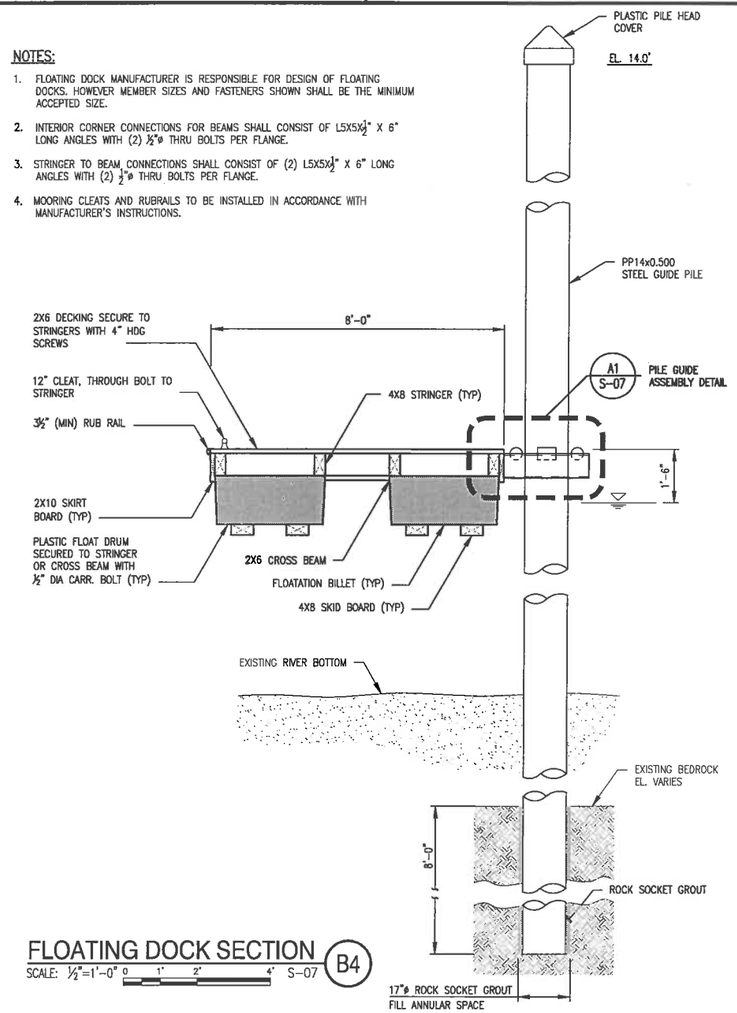

FLOATING DOCK SECTION

SCALE: 1/2"=1'-0" 0 1' 2' 4' S-07 B4

LEGEND:

20	EXISTING 5 FOOT CONTOUR
18	EXISTING 1 FOOT CONTOUR
0	2 FOOT FINISHED CONTOUR
D	EXISTING DRAINAGE LINE
	EXISTING CATCH BASIN
0+00	STATION DESIGNATION
	HANDRAIL

REVISION	DATE	DESCRIPTION	BY

REVISIONS

Appledore Marine Engineering, LLC
600 State St. Suite E
Portsmouth New Hampshire 03801
603.766.1870
inquiry@appledoremarine.com
SUBMITTED BY

STATE OF NEW HAMPSHIRE NOAH ELWOOD No 10534 LICENSED PROFESSIONAL ENGINEER (SEAL)

PEASE DEVELOPMENT AUTHORITY
DIVISION OF PORTS AND HARBORS, 555 MARKET STREET, PORTSMOUTH, NH
MARKET STREET MARINE TERMINAL
PORTSMOUTH, NH
LAUNCH RAMP FACILITY
FLOATING DOCK PLAN AND PROFILE

PROJECT No.:	1989V
CAD DWG FILE:	1989V 02 Ramp.dwg
DESIGNED BY:	ETL
DRAWN BY:	SNB
CHECKED BY:	NJE
SCALE:	AS SHOWN

S-07

SHEET 15 OF 21

CHECK GRAPHIC SCALES BEFORE USING.

DRAWING NAME: 1989V 02 Ramp.dwg Date Plotted: Nov 12, 2014 - 3:20pm Plotted By: DNARCOTTE

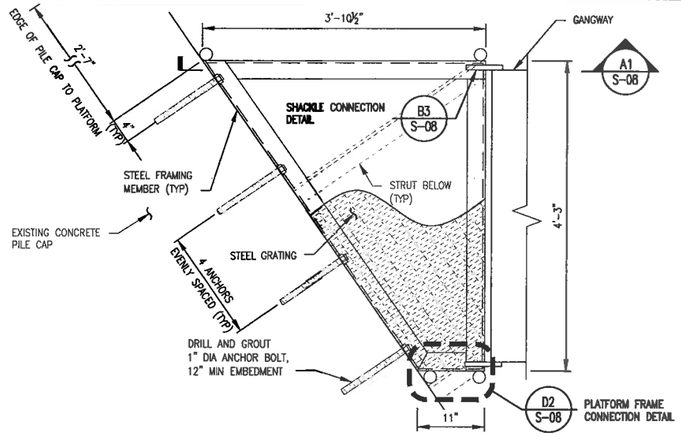

GANGWAY PLATFORM PLAN

SCALE: 1"=1'-0" 0 1/2' 1' 2'

PLAN NORTH

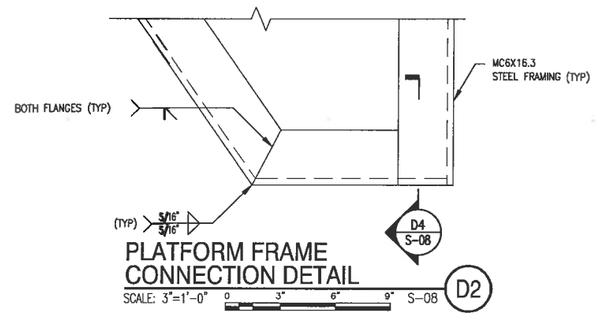

PLATFORM FRAME CONNECTION DETAIL

SCALE: 3"=1'-0" 0 3" 6" 9" S-08 D2

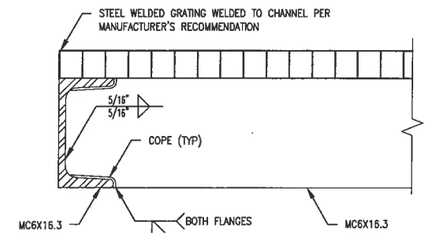

PLATFORM FRAME CONNECTION SECTION

SCALE: 3"=1'-0" 0 3" 6" 9" S-08 D4

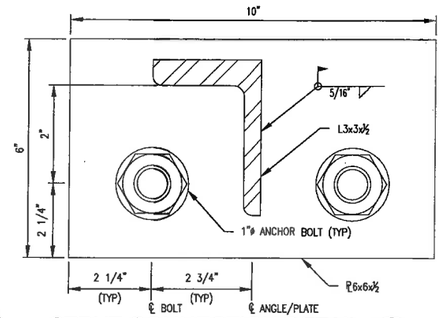

STRUT CONNECTION DETAIL

SCALE: 6" = 1'-0" S-08 D5

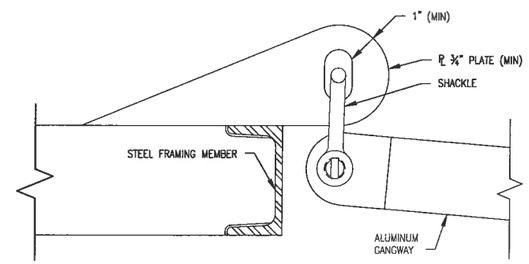

SHACKLE CONNECTION DETAIL

SCALE: 3"=1'-0" 0 3" 6" 9" S-08 B3

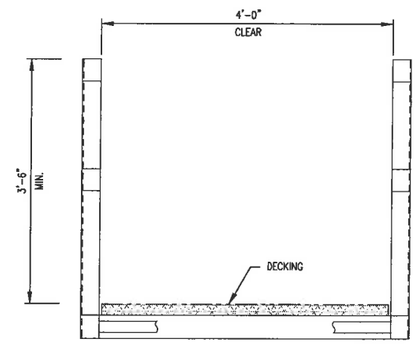

GANGWAY SCHEMATIC

SCALE: NTS S-07 B5

GANGWAY CONNECTION NOTES:

1. PLATE AND SHACKLE TO BE DESIGNED BY CONTRACTOR TO SUPPORT A SHACKLE TYPE CONNECTION TO THE GANGWAY. DETAILS AND DESIGN TO BE APPROVED BY ENGINEER.
2. COORDINATE CONNECTION DETAIL WITH GANGWAY MANUFACTURER.

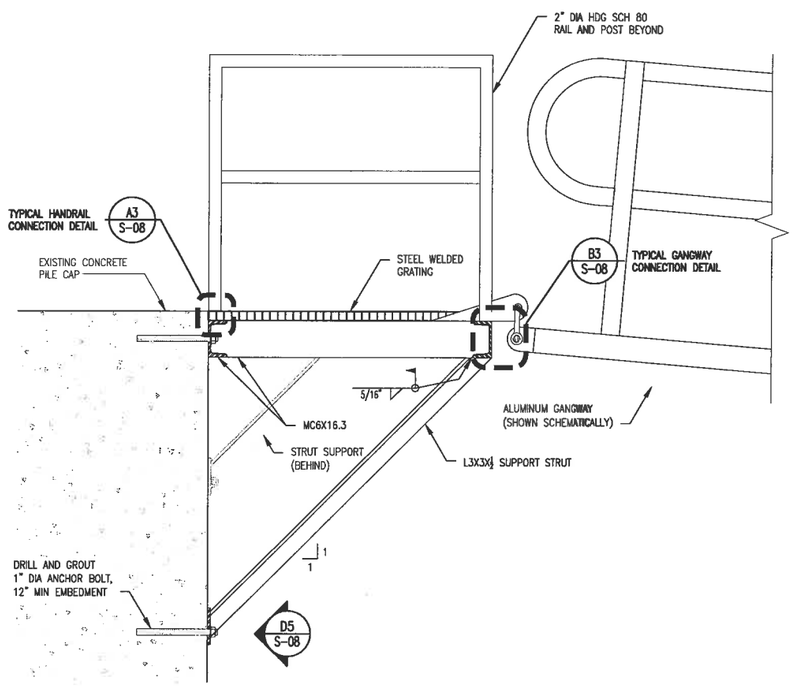

PLATFORM SECTION

SCALE: 1"=1'-0" 0 1/2' 1' 2' S-08 A1

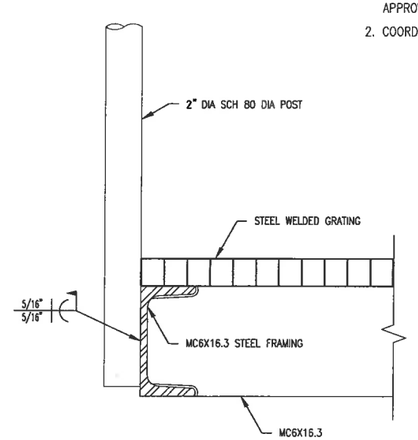

TYPICAL HANDRAIL CONNECTION DETAIL

SCALE: 3"=1'-0" 0 3" 6" 9" S-08 A3

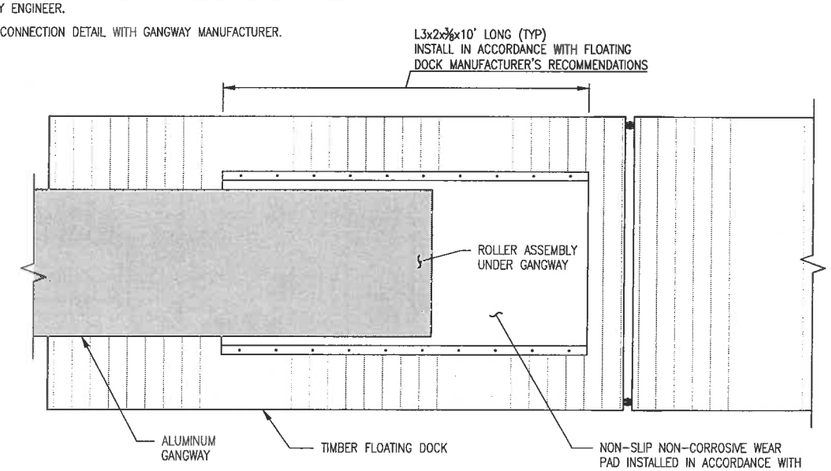

GANGWAY GUIDE DETAIL

SCALE: ½"=1'-0" 0 1' 2' 4' S-07 A4

REVISION	DATE	DESCRIPTION	BY
-	-	-	-

REVISIONS

Appledore Marine Engineering, LLC
603.766.1870
inquiry@appledoremarine.com
800 State St. Suite E
Portsmouth, New Hampshire 03801
SUBMITTED BY

DATE
TITLE
(SIGNED)

STATE OF NEW HAMPSHIRE
NOAH ELWOOD
No 10534
LICENSED
PROFESSIONAL ENGINEER
(SEAL)

PEASE DEVELOPMENT AUTHORITY
DIVISION OF PORTS AND HARBORS, 555 MARKET STREET, PORTSMOUTH, NH
MARKET STREET MARINE TERMINAL
PORTSMOUTH, NH
LAUNCH RAMP FACILITY
MISCELLANEOUS DETAILS

PROJECT No.:	1989V
CAD DWG FILE:	1989V 03 Details.dwg
DESIGNED BY:	ETL
DRAWN BY:	SNB
CHECKED BY:	NJE
SCALE:	AS SHOWN

S-08

SHEET 16 OF 21

CHECK GRAPHIC SCALES BEFORE USING.

DRAWING NAME: 1989V 03 Details.dwg Date Plotted: Nov 12, 2014 - 3:20pm Plotted By: DMARCOTTE