STATE OF NEW HAMPSHIRE
DEPARTMENT OF TRANSPORTATION

CONSTRUCTION PLANS
FEDERAL AID PROJECT

X-A000(582)
N.H. PROJECT NO. 14335
NEWBURY ROAD OVER CONNECTICUT RIVER
BRIDGE REHABILITATION PROJECT

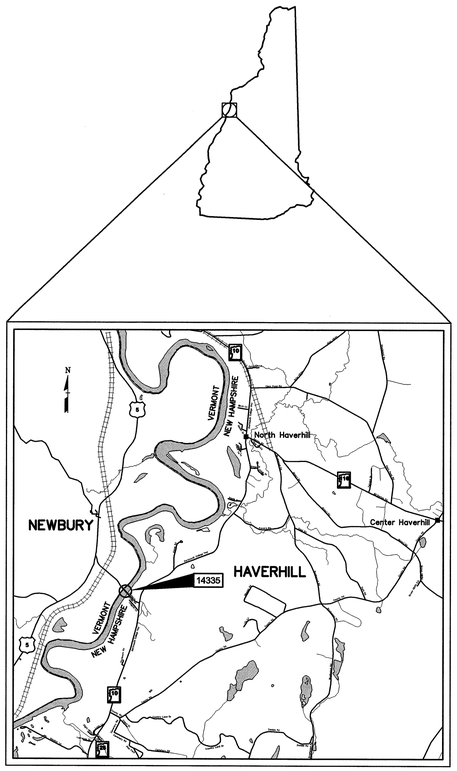

LOCATION MAP

1 ½ 0 1 2 mi.

GRAPHIC SCALE

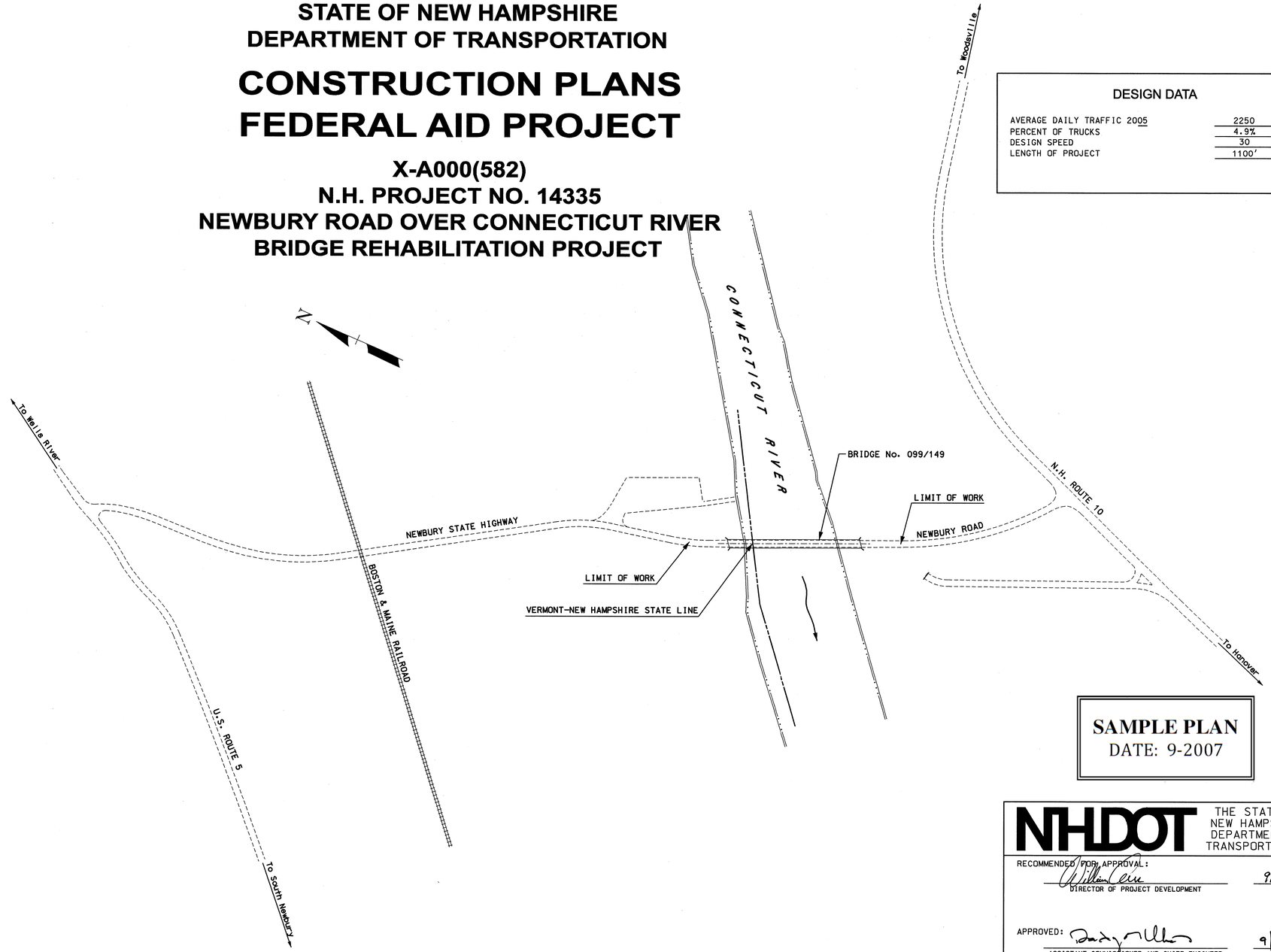

DESIGN DATA

AVERAGE DAILY TRAFFIC 2005	2250
PERCENT OF TRUCKS	4.9%
DESIGN SPEED	30
LENGTH OF PROJECT	1100'

SAMPLE PLAN
DATE: 9-2007

TOWN OF HAVERHILL, N.H. - TOWN OF NEWBURY, VT.

COUNTY OF GRAFTON, N.H. - COUNTY OF ORANGE, VT.

SCALE: 1" = 200'

DRAWN BY	PJP	DATE	3/07
CHECKED BY	MGL	DATE	5/07

NHDOT THE STATE OF NEW HAMPSHIRE DEPARTMENT OF TRANSPORTATION

RECOMMENDED FOR APPROVAL:
DIRECTOR OF PROJECT DEVELOPMENT — DATE 9/11/07

APPROVED:
ASSISTANT COMMISSIONER AND CHIEF ENGINEER — DATE 9/11/07

U. S. DEPARTMENT OF TRANSPORTATION
FEDERAL HIGHWAY ADMINISTRATION

APPROVED:
DIVISION ADMINISTRATOR — DATE

FILE NO. 108-1-1

SUBDIRECTORY	.DGN LOCATOR	FEDERAL PROJECT NO.	STATE PROJECT NO.	SHEET NO.	TOTAL SHEETS
Prj/FrontSheets	14335FSC	-----	14335	1	27

...\Prj\FrontSheets\14335FSC.dgn 09/11/2007 11:12:31 AM nt8jat

INDEX OF SHEETS

SHEET NO.	DESCRIPTION
1	TITLE PAGE
2	INDEX
3-4	STANDARD SYMBOLS
	BRIDGE PLANS (BR. No. 099/149)
5-25	PLANS & DETAILS
26	ROADWAY PLAN
27	SIGN TEXT LAYOUT

GENERAL NOTES

1. FOR STANDARD PLANS, SEE "STANDARD PLANS FOR ROAD AND BRIDGE CONSTRUCTION" DATED 2001 (A BOUND BOOK).
2. HIGH TENSION OVERHEAD TRANSMISSION LINES ARE LOCATED THROUGHOUT THE PROJECT WITH CROSSINGS AT VARIOUS LOCATIONS AND RUNNING ALONG THE ROAD THROUGHOUT THE PROJECT EVEN ON REGULAR POLES. THE CONTRACTOR IS ADVISED THAT EXTREME CAUTION WILL BE REQUIRED IN THE OPERATION OF EQUIPMENT, ESPECIALLY CRANES AND PILE DRIVING EQUIPMENT.
3. REMOVE TOPSOIL FOR ITS TOTAL DEPTH WITHIN THE LIMITS OF THE SLOPE LINES. UNLESS OTHERWISE DIRECTED, STOCKPILE TOPSOIL AND USE IT ON THIS PROJECT AS NEEDED UNDER SECTION 641 - LOAM AND/OR SECTION 647 - HUMUS.
4. REMOVAL OF EXISTING CONCRETE PAVEMENT WILL BE PAID UNDER ITEM 203.2 - ROCK EXCAVATION. THE BITUMINOUS PAVEMENT ABOVE THE CONCRETE WILL NOT BE PAID UNDER ITEM 203.2.
5. MODIFY SUPERELEVATION ON EXISTING CURVES BY THE USE OF A LEVELING COURSE TO THE RATES INDICATED ON THE PLANS OR AS ORDERED.
6. EXISTING DELINEATORS AND WITNESS MARKERS THAT ARE REMOVED AND DETERMINED BY THE ENGINEER TO BE IN ACCEPTABLE CONDITION SHALL BE RESET (SUBSIDIARY). ADDITIONAL DELINEATORS AND WITNESS MARKERS ORDERED WILL BE PAID UNDER THE APPROPRIATE ITEMS OF THE CONTRACT.
7. NO EXISTING MONUMENTS, BOUNDS, OR BENCHMARKS SHALL BE DISTURBED WITHOUT FIRST MAKING PROVISIONS FOR RELOCATION.
8. PERFORM ALL WORK WITHIN THE EXISTING RIGHT-OF-WAY, UNLESS OTHERWISE SHOWN ON THE PLANS OR AS ORDERED BY THE ENGINEER.
9. REMOVE UNPROTECTED PROJECT MARKERS (SUBSIDIARY).
10. SURVEY DATA FOR THIS PROJECT WAS COLLECTED BY SDR AND FIELD NOTES CAN BE FOUND IN FIELD BOOK _____. COORDINATES ARE NEW HAMPSHIRE STATE PLANE COORDINATES OF N.A.D. 1983 AND BEARINGS ARE GRID. ELEVATIONS ARE REFERENCED TO N.G.V.D. 1929.

THE FOLLOWING GENERAL NOTES WILL BE USED ON THIS PROJECT:

1					6	7	8				

REVISIONS AFTER PROPOSAL

NUMBER	DATE	STATION	STATION	DESCRIPTION

SDR PROCESSED	-----	DATE -----
NEW DESIGN	PJP	DATE 3/07
SHEET CHECKED	MGL	DATE X/07
AS BUILT DETAILS		DATE

SAMPLE PLAN
DATE: 9-2007

FILE NO. 108-1-1

STATE OF NEW HAMPSHIRE

DEPARTMENT OF TRANSPORTATION ∘ BUREAU OF HIGHWAY DESIGN

INDEX OF SHEETS AND GENERAL NOTES

SUBDIRECTORY	DGN	STATE PROJECT NO.	SHEET NO.	TOTAL SHEETS
Prj/CutSheet	INDEX	14335	2	27

...\cadd\Prj\CutSheet\INDEX.dgn 9/11/2007 12:28:54 PM n18pjp

GENERAL CULTURE

EDGE OF PAVEMENT (ep)
TRAVELED WAY (tw)
(pavement removed outside slope lines)

DRIVEWAYS
(label surface type)

BUILDINGS
(porch)
(building to be removed)
(label house or type of building)

FOUNDATION
(label type)

GUARDRAIL (LABEL TYPE)
(PROPOSED)
(existing)
bgr
cgr

CURB
(PROPOSED)
(existing)
(label type)

STEPS AND WALK
(label type)

INTERMITTENT WATER COURSE

SHORE LINE
river/stream
pond
(label name of water body)

BRUSH OR WOODS LINE

TREES (PLANS)
(deciduous)
(coniferous)
(stump)

TREES (CROSS-SECTIONS)
(show circumference in mm or feet & type)

HEDGE
(label type)

WELL
W

FLAG POLE
fp

LEACH FIELD
leach field

GAS PUMP
gp

FUEL TANK (ABOVE GROUND)
ft
(label size & type)

SEPTIC TANK
S

GRAVE
gr

BRIDGE CROSSING STREAM

HIGHWAY OVERPASS

ROCK OUTCROP

ORIGINAL GROUND (TYPICALS)

ROCK LINE (TYPICALS & SECTIONS ONLY)

STONE WALL
(existing)
(PROPOSED)

RETAINING WALL (LABEL TYPE)
(existing)
(PROPOSED)
(points toward retained ground)

FENCE (BARBED WIRE)

FENCE (OTHER)
(existing)
(PROPOSED)
(label fence type)

SIGNS
(single post)
(double post)

MAILBOX
mb

SATELLITE DISH ANTENNA
da

WETLANDS

WETLAND DESIGNATION NUMBER
17
PUB2E

DELINEATED WETLAND

POTENTIAL WET AREA SYMBOL

ENGINEERING

CONSTRUCTION BASELINE
30
31
32

PC, PT, POT (ON CONST BASELINE)

PI (IN CONSTRUCTION BASELINES)

INTERSECTION OR EQUATION OF TWO LINES

ORIGINAL GROUND LINE (PROFILES AND CROSS-SECTIONS)

PROFILE GRADE LINE (PROFILES AND CROSS-SECTIONS)

SLOPE LINE
CLEAR LINE
SLOPE LINE
CLEAR LINE

SLOPE LINE (FILL)

SLOPE LINE (CUT)

PROFILES AND CROSS SECTIONS:
ORIGINAL GROUND ELEVATION (LEFT)
FINISHED GRADE ELEVATION (RIGHT)
22.10
24.123
(metric)
72.5
79.14
(imperial)

INTERSTATE NUMBERED HIGHWAY
93

UNITED STATES NUMBERED HIGHWAY
4

STATE NUMBERED HIGHWAY
175

BORING LOCATION
B1

TEST PIT
TP1

SAMPLE PLAN
DATE: 9-2007

FILE NO. 108-1-1

STATE OF NEW HAMPSHIRE
DEPARTMENT OF TRANSPORTATION ◦ BUREAU OF HIGHWAY DESIGN

STANDARD SYMBOLS

SUBDIRECTORY	DGN	STATE PROJECT NO.	SHEET NO.	TOTAL SHEETS
Prj/CutSheet	SYMBOLS	14335	3	27

...\cadd\Prj\CutSheet\SYMBOLS.dgn 9/11/2007 12:28:55 PM nibpjp

DRAINAGE

MANHOLE ⊙mh
CATCH BASIN ⊡cb
DROP INLET ⊡di
(existing)

MANHOLE ●
CATCH BASIN ■
DROP INLET ■
(PROPOSED)

DRAINAGE PIPE (existing)
DRAINAGE PIPE (PROPOSED)
(label size & type)

UNDERDRAIN (existing)
UNDERDRAIN (PROPOSED)
show direction of flow
(label size & type)

HEADER (existing & PROPOSED)

END SECTION (existing & PROPOSED)
METAL
RCP

OPEN DITCH (PROPOSED)

EROSION CONTROL/ STONE SLOPE PROTECTION

FLOODPLAIN / FLOODWAY

500 YEAR FLOODPLAIN BOUNDARY — F P 5 0 0 —
100 YEAR FLOODPLAIN BOUNDARY — F P 1 0 0 —
FLOODWAY — F W —

BOUNDARIES / RIGHT-OF-WAY

RIGHT-OF-WAY LINE (label type)

PROPERTY LINE — HATFIELD / McCOY —

TOWN LINE — TOWN LINE / BOW CONCORD —

COUNTY LINE — COUNTY LINE / COOS GRAFTON —

STATE LINE — STATE LINE / MAINE NEW HAMPSHIRE —

BOUND ⊡ Bnd ⊡ NH BND

STATE LINE/ TOWN LINE MONUMENT ⊡ S/L ⊡ T/L

NHDOT PROJECT MARKER △

IRON PIPE OR PIN ⊙ ip ⊙ IP

DRILL HOLE IN ROCK ⊙ dh

NATIONAL FOREST

PROPERTY PARCEL NUMBER (12)

HISTORIC PROPERTY (H)

UTILITIES

TELEPHONE POLE
POWER POLE
JOINT OCCUPANCY
MISCELLANEOUS/UNKNOWN POLE
GUY POLE OR STUB
(plot point at face not center of symbol)

POLE STATUS:
REMOVE, LEAVE, PROPOSED, OR TEMPORARY AS APPLICABLE e.g.:
R L
P+22.0 / 4.80 (metric)
P+35 / 29.1' (imperial)
T+22.0 / 4.80
T+35 / 29.1'

LIGHT POLE
LIGHT ON POWER POLE
LIGHT ON JOINT POLE
existing (PROPOSED)

RAILROAD (label ownership)
RAILROAD SIGN
RAILROAD SIGNAL
GROUND LIGHT/LAMP POST gl lp

UNDERGROUND UTILITIES

WATER (existing) — W — W —
WATER (PROPOSED) — PW — PW —
SEWER (existing) — S — S —
SEWER (PROPOSED) — PS — PS —
TELEPHONE (existing) — T — T —
TELEPHONE (PROPOSED) — PT — PT —
ELECTRIC (existing) — E — E —
ELECTRIC (PROPOSED) — PE — PE —
GAS (existing) — G — G —
GAS (PROPOSED) — PG — PG —
LIGHTING (existing) — L — L —
LIGHTING (PROPOSED) — PL — PL —
OVERHEAD ELECTRIC TRANSMISSION LINE — OE — OE —
(label size, type and noted if abandoned on existing lines)

UTILITY JUNCTION BOX ⊠ jb (existing) ⊠ JB (PROPOSED)

WATER GATE
WATER SHUT OFF
GAS SHUT OFF
MANHOLE
SEWER
TELEPHONE
ELECTRICAL
GAS
HYDRANT
(existing) (PROPOSED)
MH-S
MH-T
MH-E
MH-G

TRAFFIC SIGNALS

MAST ARM (existing)

MAST-ARM (PROPOSED) (WITH TRAFFIC SIGNAL HEADS)
(metric) (note angle from ℄ to arm) (imperial)
9.0 MA 30' MA

OPTICOM RECEIVER
OPTICOM STROBE

TRAFFIC SIGNAL (existing) (existing) (PROPOSED)

PEDESTAL WITH PEDESTRIAN SIGNAL HEADS AND PUSH BUTTON UNIT

STEEL SPAN WIRE POLES

SIGNAL CONDUIT (existing)
SIGNAL CONDUIT (PROPOSED)

CONTROLLER CABINET (existing) cc (PROPOSED) CC

METER PEDESTAL ⊠ mp ⊠ MP

PULL BOX ☐ pb ☐ PB

HAND HOLE ☐ hh ☐ HH

LOOP DETECTOR (QUADRUPOLE) (existing) (PROPOSED) (label size)

LOOP DETECTOR (RECTANGULAR) (existing)

LOOP DETECTOR (label size)

NOTE: DETAILS AND NOTES MAY NOT BE CURRENT. CLOSELY REVIEW BEFORE USING DETAILS.

SAMPLE PLAN
DATE: 9-2007

FILE NO. 108-1-1

STATE OF NEW HAMPSHIRE
DEPARTMENT OF TRANSPORTATION ∘ BUREAU OF HIGHWAY DESIGN

STANDARD SYMBOLS

SUBDIRECTORY	DGN	STATE PROJECT NO.	SHEET NO.	TOTAL SHEETS
Prj/CutSheet	SYMBOLS	14335	4	27

...\cadd\Prj\CutSheet\SYMBOLS.dgn 9/11/2007 12:28:55 PM nibpjp

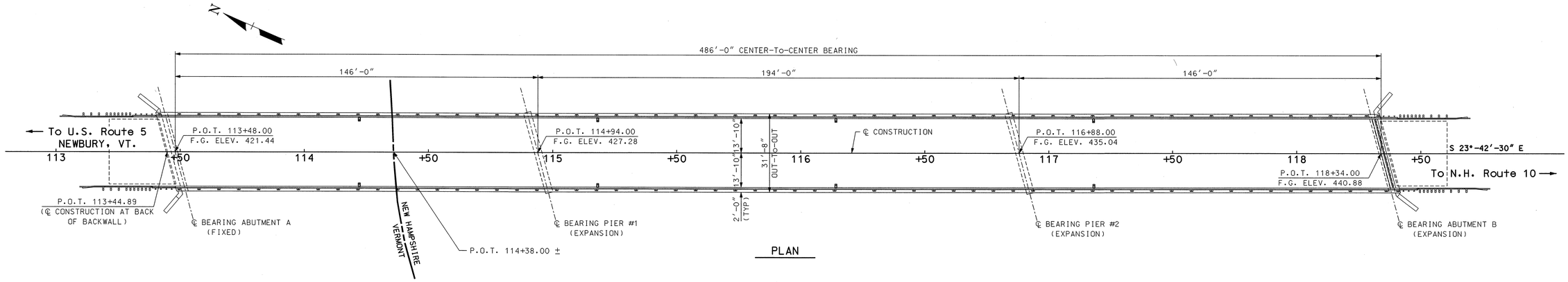

PLAN

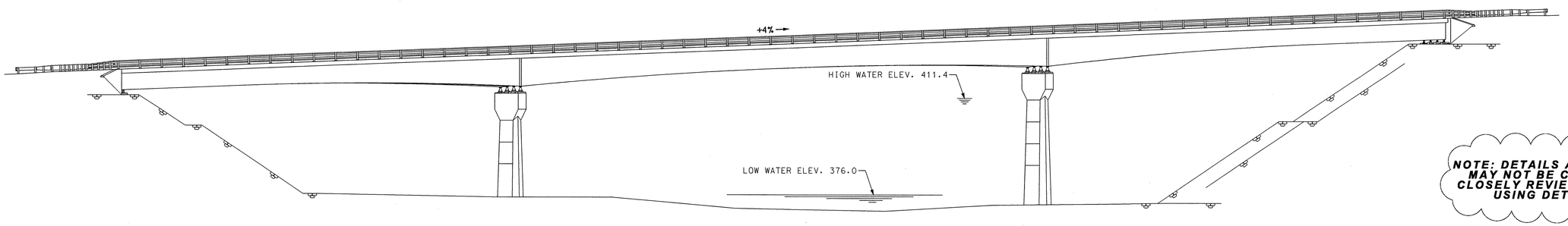

ELEVATION

NOTE: DETAILS AND NOTES MAY NOT BE CURRENT. CLOSELY REVIEW BEFORE USING DETAILS.

SUMMARY OF BRIDGE QUANTITIES

ITEM NO.	DESCRIPTION	VT QUANTITY	NH QUANTITY	TOTAL QUANTITY	UNIT
209.4	GRANULAR BACKFILL (GRAVEL)	10	10	20	CY
403.911	HOT BITUMINOUS BRIDGE PAVEMENT, 1" BASE COURSE (F)	15	69	84	TON
502.101	REMOVAL OF EXISTING BRIDGE STRUCTURE	0.18	0.82	1	UNIT
504.1	COMMON BRIDGE EXCAVATION (F)	9	9	18	CY
512.0101	PREPARATION FOR CONCRETE REPAIRS, CLASS I	5	5	10	SY
512.0201	PREPARATION FOR CONCRETE REPAIRS, CLASS II	5	5	10	SY
520.01	CONCRETE CLASS AA	3	4	7	CY
520.0199	CONCRETE CLASS AA (SELF-CONSOLIDATING)	6	30	36	CY
520.7002	CONCRETE BRIDGE DECK (QC/QA) (F)	24	110	134	CY
528.62	PRECAST CONCRETE DECK PANELS, POST-TENSIONED (F)	2308	10515	12823	SF
534.1	WATER REPELLENT (LINSEED OIL)	4	26	30	GAL
534.3	WATER REPELLENT (SILANE-SILOXANE)	10	44	54	GAL
538.2	BARRIER MEMBRANE, VERTICAL SURFACES (F)	16	16	32	SY
538.6	BARRIER MEMBRANE, WELDED BY TORCH, MACHINE METHOD (F)	270	1230	1500	SY
541.5	PVC WATERSTOPS, NH TYPE 5 (F)	33	---	33	LF
544.2	REINFORCING STEEL, EPOXY COATED (F)	3427	15614	19041	LB
544.21	REINFORCING STEEL, EPOXY COATED, MECHANICAL CONNECTORS (F)	1717	7820	9537	LB
547.	SHEAR CONNECTORS (F)	701	3195	3896	EA
548.21	ELASTOMERIC BEARING ASSEMBLIES (F)	---	8	8	EA
548.22	ELASTOMERIC BEARING ASSEMBLIES (F)	---	4	4	EA
550.1	STRUCTURAL STEEL (F)	450	1510	1960	LB
550.191	TEMPORARY GIRDER SUPPORT SYSTEM	---	1	1	UNIT
556.101	PAINTING EXISTING STRUCTURAL STEEL	0.18	0.82	1	UNIT
556.201	CONTAINMENT AND ENVIRONMENTAL PROTECTION	0.18	0.82	1	UNIT
556.301	WORKER PROTECTION	0.18	0.82	1	UNIT
556.401	WASTE MANAGEMENT	0.18	0.82	1	UNIT
559.41	MODIFIED ELASTOMERIC PLUG TYPE FLEXIBLE JOINT, 6" WIDE (F)	29	---	29	LF
559.5	SILICONE JOINT SEALANT (F)	11	---	11	LF
561.301	PREFABRICATED EXPANSION JOINT, FINGER JOINT (F)	---	33	33	LF
563.23	BRIDGE RAIL T3 (F)	177	806.4	983.4	LF
563.84	TEMPORARY BRIDGE RAIL (F)	180	820	1000	LF
565.23	BRIDGE APPROACH RAIL T3 (F)	58.2	58.2	116.4	LF
615.30801	RESET BRIDGE MOUNTED TRAFFIC SIGN STRUCTURE	0.18	0.82	1	UNIT
672.	STATE LINE MARKER (F)	0.18	0.82	1	UNIT
1002.1	REPAIRS OR REPLACEMENTS AS NEEDED	*	*	*	$
1002.2	PAY ADJUSTMENT (INCENTIVE/ DISCENTIVE)	*	*	*	$
1010.41	QUALITY CONTROL, QUALITY ASSURANCE (QC/QA) FOR CONCRETE	*	*	*	$

(F) = FINAL PAY QUANTITY
* = NOT A BID ITEM

SUMMARY OF ROADWAY QUANTITIES

ITEM NO.	DESCRIPTION	VT QUANTITY	NH QUANTITY	TOTAL QUANTITY	UNIT
202.7	REMOVAL OF GUARDRAIL (F)	58.2	58.2	116.4	LF
403.11	HOT BITUMINOUS PAVEMENT, MACHINE METHOD	64	145	209	TON
403.12	HOT BITUMINOUS PAVEMENT, HAND METHOD	2	2	4	TON
417.	COLD PLANING BITUMINOUS SURFACES	385	385	770	SY
604.0007	POLYETHYLENE LINER	2	2	4	EA
604.4	RECONSTRUCTING/ADJUSTING CATCH BASIN & DROP INLET	4	4	8	LF
606.417	PORTABLE CONCRETE BARRIER FOR TRAFFIC CONTROL	144	656	800	LF
606.91	RESETTING OR SETTING GUARDRAIL	50	50	100	LF
609.01	STRAIGHT GRANITE CURB	76	76	152	LF
615.02	TRAFFIC SIGN TYPE B (F)	---	36	36	SF
615.022	TRAFFIC SIGN TYPE B, BREAKAWY MOUNTS (F)	---	85.25	85.25	SF
615.03	TRAFFIC SIGN TYPE C (F)	---	14.25	14.25	SF
615.05	TRAFFIC SIGN TYPE BB (F)	6.67	---	6.67	SF
615.06	TRAFFIC SIGN TYPE CC (F)	---	4.0	4.0	SF
616.161	TRAFFIC SIGNALS (TEMP.)	0.5	0.5	1	UNIT
618.6	UNIFORMED OFFICERS	*	*	*	$
618.61	UNIFORMED OFFICERS WITH VEHICLE	*	*	*	$
618.7	FLAGGERS	750	750	1500	HR
619.1	MAINTENANCE OF TRAFFIC	0.5	0.5	1	UNIT
628.2	SAWED BITUMINOUS PAVEMENT	30	30	60	LF
632.0104	RETROREFLECTIVE PAINT PAVEMENT MARKING, 4" LINE	1060	2340	3400	LF
632.9104	OBLITERATE PAVEMENT MARKING, 4" LINE	1060	2340	3400	LF
645.7	STORM WATER POLLUTION PREVENTION PLAN	0.18	0.82	1	UNIT
645.71	MONITORING SWPPP AND EROSION AND SEDIMENT CONTROLS	18	82	100	HR
692	MOBILIZATION	0.18	0.82	1	UNIT
698.13	FIELD OFFICE TYPE C	2	8	12	MONTH
699.	MISCELLANEOUS TEMPORARY EROSION AND SEDIMENT CONTROL	*	*	*	$
1008.1	ALTERATIONS AND ADDITIONS AS NEEDED - TEMPORARY LIGHTING	*	*	*	$
1010.15	FUEL ADJUSTMENT	*	*	*	$

SAMPLE PLAN
DATE: 9-2007

SUBDIRECTORY	.DGN LOCATOR	SHEET SCALE
BRC/BrSite	GENPLAN	1" = 20'

STATE OF NEW HAMPSHIRE
DEPARTMENT OF TRANSPORTATION * BUREAU OF BRIDGE DESIGN

TOWN HAVERHILL, N.H. - NEWBURY, VT BRIDGE NO. 099\149 STATE PROJECT 14335
LOCATION NEWBURY ROAD over CONNECTICUT RIVER

GENERAL PLAN & ELEVATION

REVISIONS AFTER PROPOSAL		BY	DATE		BY	DATE
	DESIGNED	MGL	2/07	CHECKED	JWP	8/07
	DRAWN	PJP	3/07	CHECKED	JWP	8/07
	QUANTITIES	MGL	9/07	CHECKED	JAT	9/07
	ISSUE DATE		FEDERAL PROJECT NO.		SHEET NO.	
	REV. DATE		----------		5	

BRIDGE SHEET 1 OF 21
FILE NUMBER 108-1-1
TOTAL SHEETS 27

...\cadd\BRC\BrSite\GENPLAN.dgn 9/11/2007 12:28:56 PM n18pjp

DESIGN LOADS, MATERIALS AND SPECIFICATIONS

(1) DECK DESIGN LOADING: HL-93
EXISTING GIRDER DESIGN LOADING: HS20-44, MODIFIED FOR MILITARY LOADING

(2) DECK DESIGN METHOD: LOAD AND RESISTANCE FACTOR DESIGN (LRFD)

(3) SPECIFICATIONS: AASHTO 2007 LRFD BRIDGE DESIGN SPECIFICATIONS
NHDOT 2006 STANDARD SPECIFICATIONS AS AMENDED
WELDING PER AASHTO/AWS D1.5-02 (INCLUDING ALL REVISIONS PUBLISHED BY AASHTO AS OF THE OPENING) AND NHDOT STANDARD SPECIFICATI(FOR ROAD AND BRIDGE CONSTRUCTION

(4) SUPERSTRUCTURE: PRECAST FULL DEPTH CONCRETE PANELS
POST-TENSIONED LONGITUDINALLY

(5) REINFORCING STEEL: AASHTO M31 (ASTM A 615) GRADE 60

(6) POST-TENSIONING STEEL: SEVEN WIRE STRAND CONFORMING TO AASHTO M203 (ASTM A416) GRADE 270, LOW RELAXATION

(7) CONCRETE: PRECAST DECK PANEL UNITS: f'c = 4000 psi
BRIDGE DECK, BRIDGE COPING, ABUTMENT BACKWALLS AND PATCHING = 4000 psi

BRIDGE DECK AND COPINGS, ITEM 520.7002, CONCRETE BRIDGE DECK (QC/QA)(F)
ABUTMENT BACKWALLS AND PATCHING, ITEM 520.01, CONCRETE CLASS AA

(8) EXPANSION JOINT STEEL: AASHTO M270 GRADE 50 (ASTM A709, GRADE 50)
GALVANIZED, EXCEPT AS OTHERWISE ALLOWED

(9) SEISMIC PERFORMANCE CATEGORY A: A = 0.09

NOTE: DETAILS AND NOTES MAY NOT BE CURRENT. CLOSELY REVIEW BEFORE USING DETAILS.

BRIDGE REMOVAL NOTES

(1) THE CONTRACTOR SHALL SUBMIT, FOR DOCUMENTATION IN ACCORDANCE WITH SECTION 105.02, A DETAILED OUTLINE OR PLAN OF THE PROPOSED METHOD FOR REMOVAL OF THE EXISTING BRIDGE COMPONENTS PRIOR TO COMMENCEMENT OF ANY REMOVAL WORK.

(2) REMOVAL OF EXISTING BRIDGE STRUCTURE, ITEM 502.101, EXCEPT AS OTHERWISE SHOWN IN THE PLANS, SHALL INCLUDE:

A) COMPLETE REMOVAL OF THE EXISTING BRIDGE DECK INCLUDING ALL SCUPPERS, SHEAR CONNECTORS AND EXPANSION JOINT STEEL

B) EXISTING BRIDGE SHOES AT PIER 1 AND 2, AND ABUTMENT B

C) REMOVAL OF EXISTING BRIDGE RAIL

D) REMOVAL OF BACKWALL AS SHOWN IN THE PLANS

(3) THE TEMPORARY SUPPORTS FOR THE DECK SLAB SHALL BE DESIGNED FOR 100% HS20-44 LIVE LOAD AND AASHTO RAIL IMPACT LOADS BY A PROFESSIONAL ENGINEER, LICENSED IN THE STATE OF NEW HAMPSHIRE AND SUBMITTED FOR DOCUMENTATION TO THE BUREAU OF BRIDGE DESIGN. WELDING TO THE EXISTING STRUCTURAL STEEL IS NOT PERMITTED. BOLT HOLES REQUIRED FOR ATTACHMENT TO THE EXISTING STEEL SHALL BE DRILLED AS APPROVED BY THE ENGINEER AND FILLED WITH 7/8" DIAMETER HIGH STRENGTH BOLTS AFTER CONSTRUCTION. ALL COSTS FOR THE TEMPORARY SUPPORTS SHALL BE INCLUDED IN ITEM 502.101. THE TEMPORARY SUPPORTS SHOWN ON BRIDGE SHEET 3 ARE SCHEMATIC ONLY AND ARE NOT INTENDED TO INDICATE A PREFERRED METHOD OF CONSTRUCTION.

(4) DURING CONCRETE DECK REMOVAL OPERATIONS, EXTREME CARE SHALL BE TAKEN NOT TO DAMAGE TOP FLANGES OF EXISTING STRINGERS. ANY DAMAGE SHALL BE IMMEDIATELY REPORTED TO THE BUREAU OF BRIDGE DESIGN AND REPAIRED AS DIRECTED, AT THE CONTRACTORS EXPENSE.

GENERAL NOTES

(1) NO EXISTING MONUMENTS, BOUNDS OR BENCHMARKS SHALL BE DISTURBED WITHOUT FIRST MAKING PROVISIONS FOR RELOCATION.

(2) THE CONTRACTOR SHOULD BE AWARE THAT EXISTING STRUCTURE DIMENSIONS AND ELEVATIONS SHOWN ON THESE PLANS WERE TAKEN FROM ORIGINAL BRIDGE PLANS AND DO NOT NECESSARILY REPRESENT "AS BUILT" DIMENSIONS AND ELEVATIONS. THE CONTRACTOR SHALL FIELD VERIFY ALL DIMENSIONS AND ELEVATIONS OF THE EXISTING STRUCTURES AND BE PREPARED TO MAKE ANY ADJUSTMENTS REQUIRED TO PROPERLY REHABILITATE THE BRIDGE. ANY DISCREPANCIES IN DIMENSIONS, CHARACTER, OR EXTENT OF THE EXISTING FEATURES SHALL BE BROUGHT TO THE ATTENTION OF THE ENGINEER PRIOR TO ADVANCING THE WORK. THE EXISTING PLANS (FILE NO. 3-13-3-4) MAY BE VIEWED AT THE NHDOT, BUREAU OF BRIDGE DESIGN OFFICE DURING THE BIDDING PERIOD. AFTER THE CONTRACT IS AWARDED, A COMPLETE SET OF THE EXISTING PLANS WILL BE FORWARDED TO THE CONTRACTOR UPON REQUEST.

(3) PORTABLE BARRIERS AND TEMPORARY BRIDGE RAIL SHALL BE IN PLACE BEFORE REMOVAL OPERATIONS BEGIN FOR EACH CONSTRUCTION PHASE.

(4) THE CONTRACTOR SHALL TAKE ALL NECESSARY MEASURES TO INSURE THAT DEBRIS INCLUDING SLURRY FROM SAWCUTTING DOES NOT FALL INTO THE WATERWAY BELOW THE EXISTING STRUCTURE. ALL COSTS SHALL BE PAID UNDER ITEM 502 AND SHALL INCLUDE ERECTION, MAINTENANCE AND REMOVAL OF TEMPORARY STRUCTURES OR OTHER SUCH METHODS AS APPROVED.

(5) THE WELDING OF ATTACHMENTS TO GIRDERS FOR CONSTRUCTION PURPOSES SHALL NOT BE PERMITTED UNLESS APPROVED BY NHDOT, BUREAU OF BRIDGE DESIGN.

(6) NO SCAFFOLDS SHALL BE ERECTED OR OPERATIONS CONDUCTED IN THE WATERWAY, UNLESS APPROVED BY THE CONTRACT ADMINISTRATOR.

(7) DURING REMOVAL AND REPAIR OPERATIONS, EXTREME CARE SHALL BE TAKEN NOT TO DAMAGE EXISTING STRUCTURAL STEEL AND REINFORCING STEEL THAT IS TO REMAIN IN PLACE. ANY DAMAGE SHALL BE IMMEDIATELY REPORTED TO THE BUREAU OF BRIDGE DESIGN AND REPAIRED AS DIRECTED, AT THE CONTRACTOR'S EXPENSE.

(8) HOLES DRILLED IN EXISTING CONCRETE SHALL BE DRILLED 1/2" DIAMETER LARGER THAN THE BAR DIAMETER AND GROUTED WITH HIGH STRENGTH, NON-SHRINK GROUT. ALL COSTS FOR DRILLING AND GROUTING SHALL BE SUBSIDIARY TO ITEM 544.2.

(9) ALL EXPOSED EDGES OF PROPOSED CONCRETE SURFACES SHALL BE CHAMFERED 3/4", UNLESS OTHERWISE NOTED.

(10) SEAL JOINTS BETWEEN DECK AND BACKWALL (ABUTMENT A) WITH ITEM 559.5, SILICONE JOINT SEALANT (F).

(11) FOR SALVAGE OF MATERIALS SEE PROSECUTION OF WORK.

SUBSTRUCTURE REHABILITATION NOTES

(1) NEW CONCRETE TO RECONSTRUCT THE ABUTMENT BACKWALL AREAS AND WINGWALLS AS SHOWN ON THE PLANS OR AS DIRECTED SHALL BE ITEM 520.01, CONCRETE CLASS AA.

(2) EXISTING REINFORCING STEEL THAT IS TO REMAIN IN PLACE WITHIN THE REMOVAL AREAS SHALL BE CUT AS REQUIRED TO PROVIDE 2 1/2" MINIMUM CLEAR COVER FROM THE PROPOSED CONCRETE SURFACES, EXCEPT AS OTHERWISE NOTED. ALL COSTS INCLUDED IN ITEM 502.101. ALL NEW REINFORCING BARS SHALL HAVE A MINIMUM CLEAR COVER OF 2 1/2" FROM PROPOSED CONCRETE SURFACES.

(3) REMOVE ANY EXISTING LOOSE OR FLAKING EPOXY COATING FROM THE BACKWALL AND SEATS AS DIRECTED. COSTS PAID UNDER ITEM 502.101.

(4) PRIOR TO PLACING NEW CONCRETE AGAINST EXISTING CONCRETE SURFACES, BLAST CLEAN THE EXISTING CONCRETE SURFACES. ALL COSTS SHALL BE SUBSIDIARY TO ITEM 512.0101 OR 512.0201.

(5) ITEM 538.2 SHALL EXTEND DOWN BACKWALL AND ACROSS APPROACH SLAB 1'-6".

(6) ALL EXPOSED CONCRETE SURFACES OF ABUTMENTS, PIERS AND WINGWALLS SHALL BE LIGHTLY SANDBLASTED AS DIRECTED BY THE CONTRACT ADMINISTRATOR AND COATED WITH WATER REPELLENT. ALL COSTS TO BE PAID UNDER ITEM 534.1, WATER REPELLENT (LINSEED OIL) (F).

(7) EXISTING ABUTMENTS, WINGWALLS & PIERS SHALL BE INSPECTED FOR DETERIORATED CONCRETE JOINTLY BY THE CONTRACT ADMINISTRATOR AND CONTRACTOR. ALL DETERIORATED CONCRETE SHALL BE REMOVED. CONCRETE SURFACES OF THE REMOVAL LIMITS SHALL BE SAWCUT TO A 1" DEPTH TO PROVIDE CLEAN REMOVAL LINES. THE EXISTING CONCRETE AND EXPOSED REINFORCEMENT SHALL BE BLAST CLEANED PRIOR TO PLACING NEW CONCRETE. ALL INSPECTION, REMOVAL AND CLEANING SHALL BE AS SPECIFIED IN SECTION 512 AND PAID FOR UNDER ITEM 512.0101 OR 512.0201. NEW CONCRETE PLACED IN THESE AREAS SHALL BE PAID UNDER 520.01.

SUPERSTRUCTURE RECONSTRUCTION NOTES

(1) TEMPORARILY REMOVE ENOUGH BOLTS CONNECTING THE CROSS-FRAMES BETWEEN GIRDERS 2 AND 3 TO FACILITATE GIRDER DEFLECTION VARIATION BETWEEN PHASES. NEW NUTS, BOLTS AND WASHERS SHALL BE REINSTALLED IN CONFORMANCE WITH 550 AFTER PHASE 2. ALL COSTS SHALL BE INCLUDED IN ITEM 502.101.

(2) NEW SHEAR CONNECTORS SHALL BE INSTALLED AS SHOWN IN THE PLANS (4 STUDS PER BLOCKOUT). NEW STUDS SHALL BE FIELD WELDED TO THE TOP FLANGE OF ALL GIRDERS WITH AUTOMATICALLY TIMED STUD WELDING EQUIPMENT. FOR EACH PHASE, SHEAR CONNECTORS SHALL BE PLACED AFTER ALL TRANSVERSE JOINTS HAVE BEEN GROUTED AND THE DECK HAS BEEN POST-TENSIONED. ALL COSTS FOR MATERIALS AND INSTALLATION SHALL BE PAID UNDER ITEM 547, SHEAR CONNECTORS (F).

(3) NO STRUCTURAL REPAIRS ARE ANTICIPATED. STRUCTURAL STEEL SHALL BE INSPECTED FOR STRUCTURAL DEFICIENCIES (e.g. SIGNIFICANT STEEL LOSS, CRACKS, MISSING BOLTS, ETC.) JOINTLY BY THE CONTRACT ADMINISTRATOR AND CONTRACTOR. RESET THE ONE PROTRUDING BEARING ANCHOR BOLT ON VERMONT ABUTMENT, BOLT SHALL BE PULLED, HOLE DRILLED FULL DEPTH AND ANCHOR BOLT GROUTED INTO THE ABUTMENT. ANY REPAIRS REQUIRED BY THE DEPARTMENT SHALL BE PERFORMED BY THE CONTRACTOR AND PAID UNDER ITEM 1002.1, REPAIRS OR REPLACEMENTS AS NEEDED.

(4) EXISTING ROCKER BEARINGS AT BOTH PIERS AND THE N.H. ABUTMENT (ABUTMENT B) SHALL BE REPLACED WITH ITEMS 548.21 AND 548.22, ELASTOMERIC BEARING ASSEMBLIES (F), AS SHOWN IN THE PLANS. EXISTING FIXED BEARINGS AT THE VERMONT ABUTMENT (ABUTMENT A) SHALL BE RETAINED, CLEANED AND PAINTED.

(5) JACKING SHALL BE REQUIRED TO REMOVE AND REPLACE BRIDGE SHOES AS OUTLINED IN THE PLANS AND SPECIAL PROVISIONS. THE PROPOSED JACKING METHOD SHALL BE SUBMITTTED TO THE ENGINEER FOR APPROVAL. THE MAXIMUM ALLOWABLE DIFFERENCE BETWEEN ADJACENT JACKING POINTS SHALL BE 1/4". TEMPORARY SHIMS OR BLOCKS SHALL BE PLACED BENEATH GIRDER FLANGES DURING THE TIME THAT JACKS ARE SUPPORTING THE LOADS. ALL COSTS SHALL BE INCLUDED IN ITEM 550.191, TEMPORARY GIRDER SUPPORT SYSTEM.

(6) EXISTING STRUCTURAL STEEL SHALL BE CLEANED AND PAINTED AFTER COMPLETION OF ALL OTHER SUPERSTRUCTURE WORK, AS OUTLINED IN THE SPECIAL PROVISIONS FOR 556.

SEQUENCE OF DECK CONSTRUCTION

(1) PLACE TEMPORARY RAIL.

(2) INSTALL TEMPORARY DECK SUPPORT STSTEM.

(3) DISCONNECT THE K-FRAMES IN THE INTERIOR BAY.

(4) REMOVE THE EXISTING DECK TO THE LIMITS SHOWN IN PHASE 1.

(5) PLACE ALL PRECAST DECK PANELS ON GIRDERS IN PHASE 1.

(6) ADJUST THE LEVELING SCREWS ON DECK PANELS TO SET PANELS TO ELEVATIONS SHOWN IN TOP OF PANEL ELEVATIONS TABLE (SEE BRIDGE SHEET 9). TORQUE ALL LEVELING SCREWS.

(7) INSTALL LONGITUDINAL POST TENSIONING STRAND IN DUCTS AND SEAL JOINTS IN DUCTS BETWEEN DECK PANELS.

(8) PLACE A FLOWABLE NON-SHRINK GROUT IN ALL TRANSVERSE JOINTS. THE GROUT SHALL BE RODDED OR VIBRATED TO ENSURE ALL VOIDS ARE FILLED.

(9) AFTER THE GROUT IN THE TRANSVERSE JOINTS HAS ATTAINED A MINIMUM STRENGTH OF 1500 psi, THE LONGITUDINAL POST TENSIONING STRANDS MAY BE STRESSED. SEE PRECAST DECK PANEL NOTE #14.

(10) INSTALL SHEAR CONNECTORS IN ALL BLOCKOUTS.

(11) GROUT ALL HAUNCHES AND SHEAR CONNECTOR BLOCKOUTS.

(12) REMOVE LEVELING SCREWS AND FILL BLOCKOUTS WITH APPROVED NON-SHRINK GROUT.

(13) CAST END CLOSURE POURS AND COPING POUR.

(14) PLACE RAIL, MEMBRANE AND PAVE.

(15) PLACE TEMPORARY RAIL.

(16) REPEAT STEPS 4 THROUGH 14 FOR PHASE 2.

(17) RECONNECT THE K-FRAMES IN THE INTERIOR BAY.

(18) PLACE MECHANICAL CONNECTORS IN THE CLOSURE POUR BETWEEN PHASES AND PLACE CONCRETE.

(19) PLACE RAIL, MEMBRANE AND PAVE.

PRECAST DECK PANEL NOTES

(1) THE CONCRETE COMPRESSIVE STRENGTH OF PRECAST PANEL UNITS SHALL BE 4000 psi AT 28 DAYS. CORROSION INHIBITOR SHALL BE USED (4 GAL/CY).

(2) ALL REINFORCING STEEL FOR THE SUPERSTRUCTURE SHALL CONFORM TO AASHTO M31 (ASTM A615) GRADE 60, EPOXY COATED.

(3) PRECAST PANEL REINFORCING SHALL HAVE A MINIMUM CLEAR COVER OF 2", UNLESS OTHERWISE NOTED.

(4) A GROUT DAM/FORMWORK SHALL BE USED TO RETAIN GROUT PLACED WITHIN THE HAUNCH ABOVE THE TOP FLANGE OF THE GIRDERS. ALL UNYIELDING FORMWORK AND LEVELING SCREWS SHALL BE REMOVED PRIOR TO PAVING OPERATIONS. THE PROPOSED METHOD SHALL BE SUBMITTED FOR DOCUMENTATION.

(5) POST-TENSIONING STEEL SHALL BE 0.6"Φ UNCOATED SEVEN-WIRE STRAND IN COMPLIANCE WITH AASHTO M203 (ASTM A416) GRADE 270, LOW RELAXATION.

(6) THE FINAL POST-TENSIONING FORCE, AFTER ALL LOSSES, SHALL INDUCE 350 PSI OF COMPRESSION ACROSS THE WIDTH OF DECK PANELS. THE CONTRACTOR SHALL SUBMIT THE PROPOSED POST-TENSIONING PLAN AS PART OF PRECAST PANEL SHOP DRAWINGS TO THE ENGINEER FOR APPROVAL.

(7) POST-TENSIONING OF PANELS SHALL BE PERFORMED IN ACCORDANCE WITH SECTION 528.

(8) ALL COSTS OF POST-TENSIONING STRANDS, ANCHORAGES, SCUPPERS AND REINFORCING STEEL CAST INTO THE PRECAST DECK PANEL UNITS SHALL BE PAID UNDER ITEM 528.62.

(9) LIFTING DEVICES AND ADDITIONAL STEEL IN PRECAST DECK PANELS, AS REQUIRED, SHALL BE DESIGNED BY THE FABRICATOR. ALL COSTS SHALL BE PAID UNDER ITEM 528.62.

(10) THE TOPS OF THE PRECAST UNITS SHALL BE FINISHED SMOOTH AND SHALL NOT BE RAKED TRANSVERSELY.

(11) THE DECK PANEL UNIT SHEAR KEYS SHALL BE BLAST CLEANED PRIOR TO SHIPPING.

(12) THE DECK PANEL UNIT SHEAR KEYS SHALL BE CLEANED BY AIR BLASTING JUST PRIOR TO GROUTING. GROUT FOR TRANSVERSE KEYS SHALL CONFORM TO 528.2.9.

(13) GROUTING OF HAUNCH AND SHEAR CONNECTOR BLOCKOUTS SHALL NOT BEGIN UNTIL AFTER COMPLETION OF POST-TENSIONING.

(14) THE CONTRACTOR SHALL SUBMIT DETAILED SHOP DRAWINGS AND CALCULATIONS PREPARED BY A LICENSED PROFESSIONAL ENGINEER IN THE STATE OF NEW HAMPSHIRE. THIS SUBMITTAL SHALL INCLUDE CALCULATIONS FOR THE HANDLING, ERECTION AND POST TENSIONING FORCE IN DECK PANELS (TO ACHIEVE 350 psi UNIFORM COMPRESSION) AFTER ALL LOSSES. THE CONTRACTOR IS TO DEVELOP A DETAILED SEQUENCE OF WORK TASKS TO BE PERFORMED AND SHALL SUBMIT THEM WITH THE SHOP DRAWINGS.

(15) FINAL PANEL ELEVATIONS SHALL BE ATTAINED BY ADJUSTING THE TORQUE ON LEVELING SCREWS TO PROMOTE AN EQUAL DISTRIBUTION OF PANEL DEAD LOAD TO ALL GIRDERS. THE TORQUE SCHEDULE SHALL BE SUBMITTED WITH THE SHOP DRAWINGS FOR THE PANELS. THE TORQUE TOLERANCE SHALL BE ±15%.

(16) SEE SPECIAL PROVISIONS FOR ADDITIONAL DETAILS.

CLOSURE POUR REINFORCEMENT NOTES

(1) THE COST OF CLOSURE POUR REINFORCING STEEL SHALL BE INCLUDED IN THE APPROPRIATE 544 ITEM.

(2) ALL CLOSURE POUR REINFORCEMENT SHALL HAVE A MINIMUM CLEAR COVER OF 2", UNLESS OTHERWISE NOTED.

(3) CORROSION INHIBITOR SHALL BE USED (4 GAL/CY) IN THE PANEL CLOSURE POUR. ALL COSTS SHALL BE INCLUDED IN ITEM 520.7002.

REINFORCEMENT NOTES

(1) ALL REINFORCEMENT SHALL HAVE 2 1/2" MINIMUM CLEAR COVER, UNLESS OTHERWISE NOTED.

(2) PLACE REINFORCING STEEL TO AVOID RAIL POST ANCHOR ASSEMBLIES AND EXPANSION JOINT STEEL.

(3) ANY EPOXY COATED REBARS CUT TO FIT SHALL BE TOUCHED UP WITH AN APPROVED EPOXY COATING MATERIAL. ALL COSTS SHALL BE INCLUDED IN ITEM 544.2.

(4) REINFORCING LEGEND: SP = SPACE, SPL = SPLICE, FS = FAR SIDE, NS = NEAR SIDE, BOT = BOTTOM, ALT = ALTERNATING.

(5) REINFORCING BAR MARKS APPENDED WITH AN (E), INDICATE EPOXY COATED BARS.

BEARING ASSEMBLY NOTES

(1) SEE BRIDGE SHEET 8.

EXPANSION JOINT NOTES

(1) SEE BRIDGE SHEET 15.

TEMPORARY BRIDGE RAIL NOTES

(1) SEE BRIDGE SHEET 3.

SAMPLE PLAN
DATE: 9-2007

SUBDIRECTORY	.DGN LOCATOR	SHEET SCALE
BRC/MiscShts	BR-NOTES	-----

STATE OF NEW HAMPSHIRE
DEPARTMENT OF TRANSPORTATION * BUREAU OF BRIDGE DESIGN

TOWN HAVERHILL, N.H. - NEWBURY, VT BRIDGE NO. 099\149 STATE PROJECT 14335
LOCATION NEWBURY ROAD over CONNECTICUT RIVER

BRIDGE CONSTRUCTION NOTES

REVISIONS AFTER PROPOSAL			BY	DATE		BY	DATE
		DESIGNED	MGL	7/07	CHECKED	JWP	8/07
		DRAWN	PJP	7/07	CHECKED	JWP	8/07
		QUANTITIES	---	---	CHECKED	---	---
		ISSUE DATE		FEDERAL PROJECT NO.		SHEET NO.	TOTAL SHEETS
		REV. DATE		----------		6	27

BRIDGE SHEET 2 OF 21
FILE NUMBER 108-1-1

...\Cadd\BRC\MiscShts\BR-NOTES.dgn 9/11/2007 1:13:12 PM nt8pjp

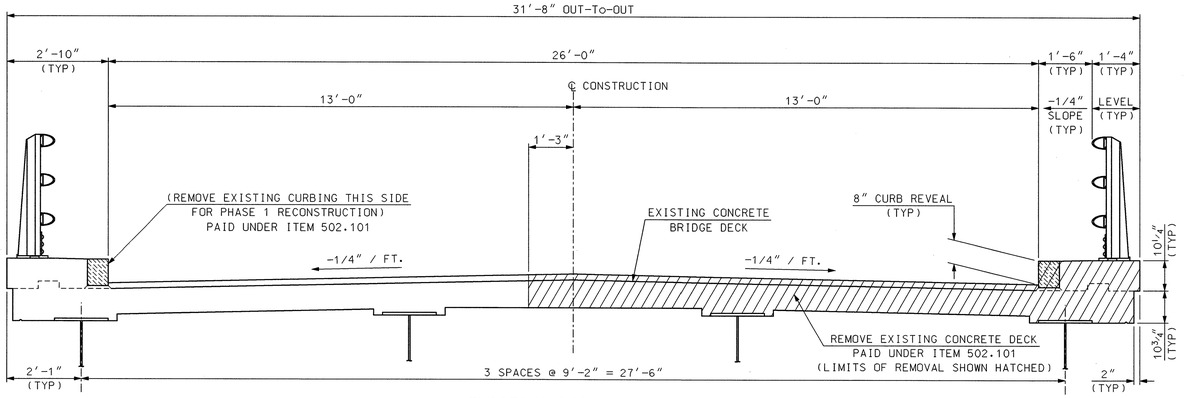

EXISTING DECK SECTION

SCALE: ½" = 1'-0"

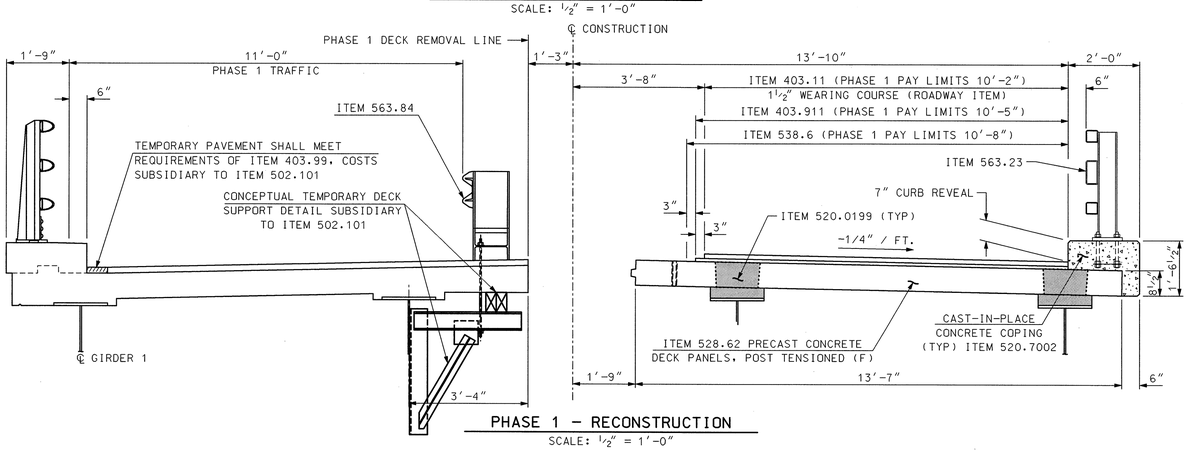

PHASE 1 - RECONSTRUCTION

SCALE: ½" = 1'-0"

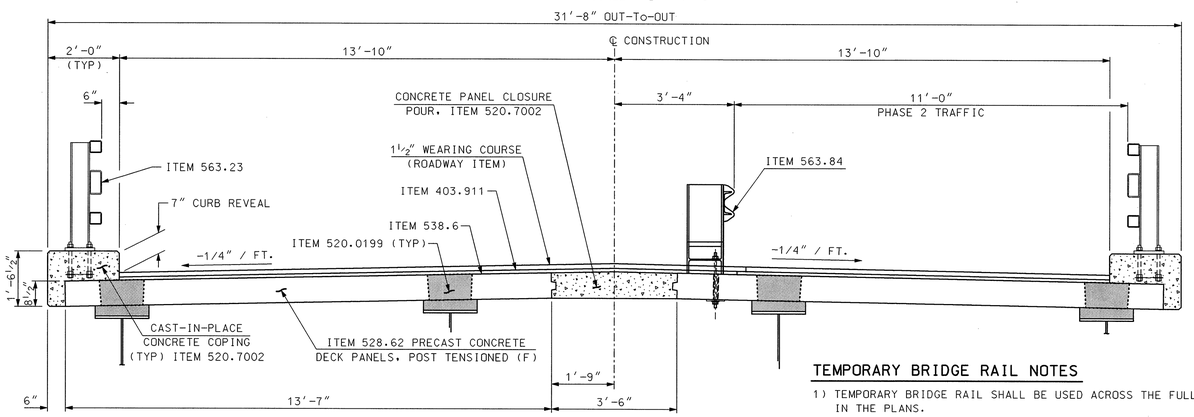

PHASE 2 - RECONSTRUCTION

SCALE: ½" = 1'-0"

NOTE: DETAILS AND NOTES MAY NOT BE CURRENT. CLOSELY REVIEW BEFORE USING DETAILS.

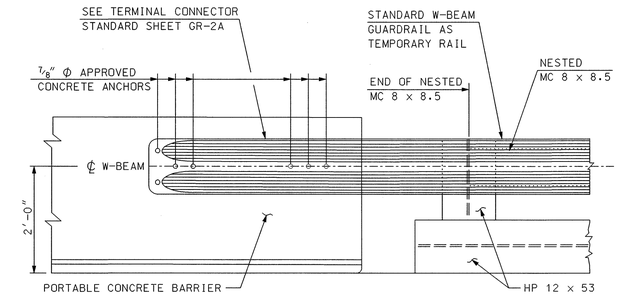

ELEVATION - CONNECTION DETAIL

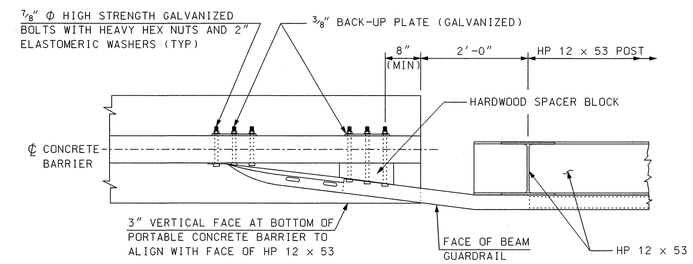

PLAN - CONNECTION DETAIL

TEMPORARY BRIDGE RAIL DETAILS

SCALE: ¾" = 1'-0"

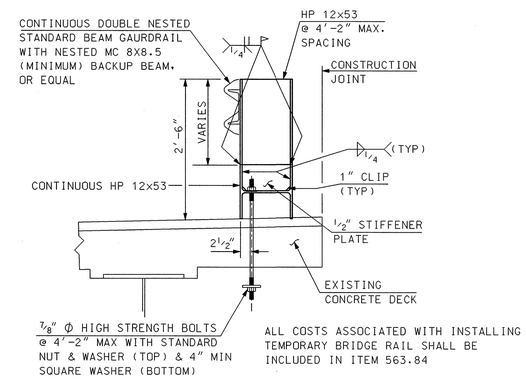

TEMPORARY BRIDGE RAIL SECTION

SCALE: ¾" = 1'-0"

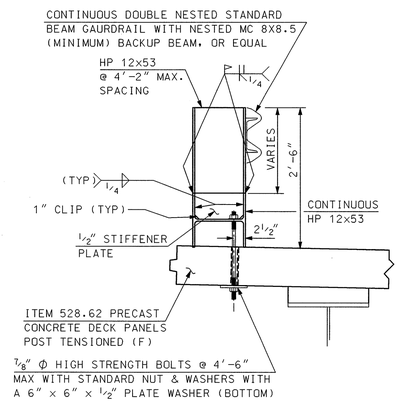

TEMPORARY BRIDGE RAIL SECTION

(WITH CONCRETE DECK PANELS)

SCALE: ¾" = 1'-0"

TEMPORARY BRIDGE RAIL NOTES

1) TEMPORARY BRIDGE RAIL SHALL BE USED ACROSS THE FULL LENGTH OF THE BRIDGE DECK DURING PHASE 1 AND PHASE 2 AS SHOWN IN THE PLANS.

2) THE TEMPORARY BRIDGE RAIL FOR PHASE 1 SHALL BE ANCHORED TO THE TEMPORARY DECK SUPPORT SYSTEM WITH ⅞" DIAMETER HIGH STRENGTH BOLTS SPACED AT 4"- 6" MAXIMUM.

3) THE TEMPORARY BRIDGE RAIL FOR PHASE 2 SHALL BE ANCHORED TO THE PROPOSED DECK UTILIZING THE PIPE SLEEVE BLOCKOUTS PROVIDED. DRILLING OR CORING INTO THE DECK WILL NOT BE PERMITTED. 6"x 6"x ½" PLATE WASHERS SHALL BE USED ON THE BOTTOM SIDE OF THE DECK. HOLES SHALL BE FILLED WITH HIGH STRENGTH NON SHRINK GROUT, SUBSIDARY TO ITEM 520.7002.

4) CONNECTIONS TO THE CONCRETE BARRIER SHALL BE MADE WITH ⅞" DIAMETER GALVANIZED HIGH STRENGTH THRU BOLTS IN CORE DRILLED HOLES.

5) ALL HARDWARE AND WORK ASSOCIATED WITH TEMPORARY BRIDGE RAIL CONNECTIONS TO PORTABLE CONCRETE BARRIER SHALL BE INCLUDED IN ITEM 563.84.

6) THE CONTRACTOR SHALL FURNISH AND INSTALL REFLECTIVE DELINEATORS AT 25 FOOT INTERVALS ALONG THE FACE OF THE TEMPORARY BRIDGE RAILING. ALL COSTS SHALL BE INCLUDED IN ITEM 563.84.

SAMPLE PLAN
DATE: 9-2007

SUBDIRECTORY	.DGN LOCATOR	SHEET SCALE
BRC/Super	14335DECK PHASES	AS NOTED

STATE OF NEW HAMPSHIRE
DEPARTMENT OF TRANSPORTATION * BUREAU OF BRIDGE DESIGN

TOWN HAVERHILL, N.H. - NEWBURY, VT BRIDGE NO. 099\149 STATE PROJECT 14335

LOCATION NEWBURY ROAD over CONNECTICUT RIVER

DECK RECONSTRUCTION SEQUENCE

REVISIONS AFTER PROPOSAL		BY	DATE		BY	DATE
	DESIGNED	MGL	6/07	CHECKED	JWP	9/07
	DRAWN	PJP	6/07	CHECKED	MGL	6/07
	QUANTITIES	MGL	9/07	CHECKED	JAT	9/07
	ISSUE DATE		FEDERAL PROJECT NO. ----------		SHEET NO. 7	
	REV. DATE					

BRIDGE SHEET 3 OF 21
FILE NUMBER 108-1-1
TOTAL SHEETS 27

...\BRC\Super\14335DECK PHASES.dgn 9/11/2007 12:28:59 PM n18pjp

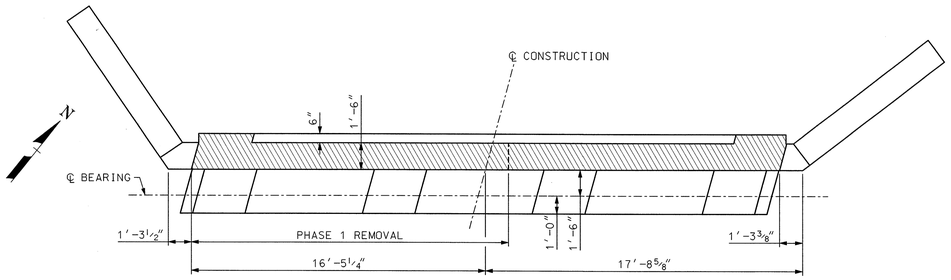

PLAN - ABUTMENT A REMOVAL

SCALE: ¼" = 1'-0"

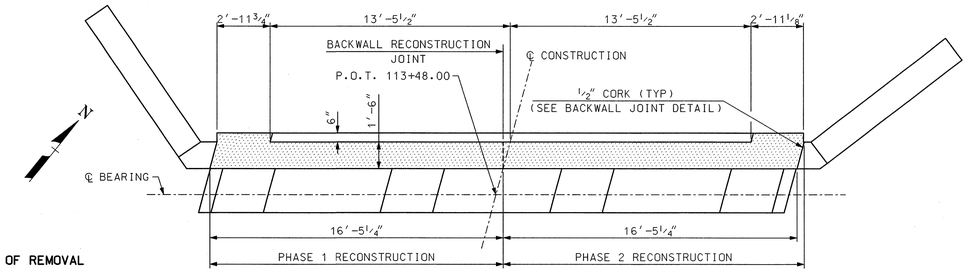

PLAN - ABUTMENT A RECONSTRUCTION

SCALE: ¼" = 1'-0"

LIMITS OF REMOVAL

CONCRETE RECONSTRUCTION

SEE BRIDGE SHEET 6 FOR ADDITTIONAL REMOVAL & RECONSTRUCTION DETAILS

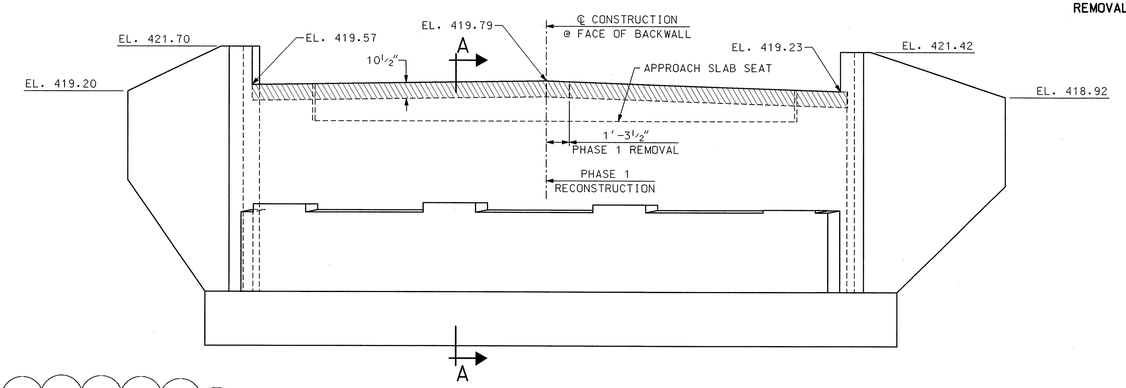

ELEVATION - ABUTMENT A REMOVAL

SCALE: ¼" = 1'-0"

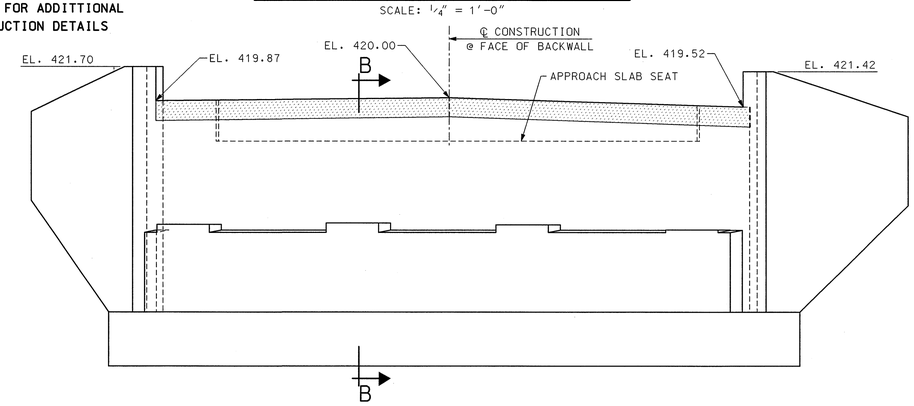

ELEVATION - ABUTMENT A RECONSTRUCTION

SCALE: ¼" = 1'-0"

NOTE: DETAILS AND NOTES MAY NOT BE CURRENT. CLOSELY REVIEW BEFORE USING DETAILS.

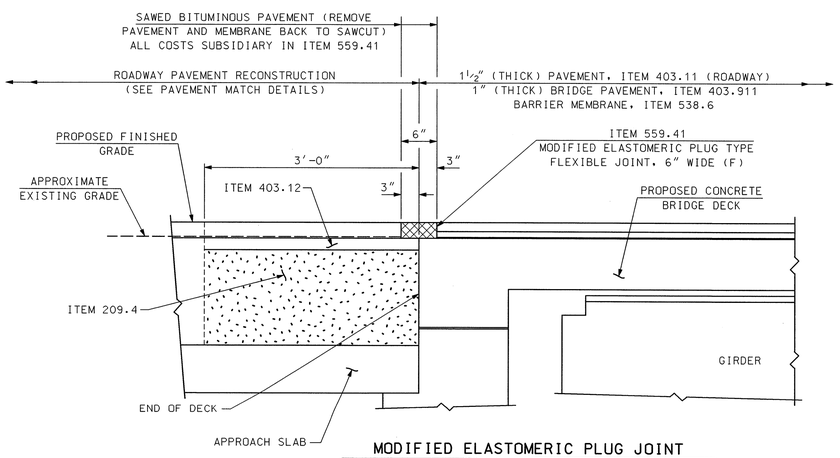

MODIFIED ELASTOMERIC PLUG JOINT

NOT TO SCALE

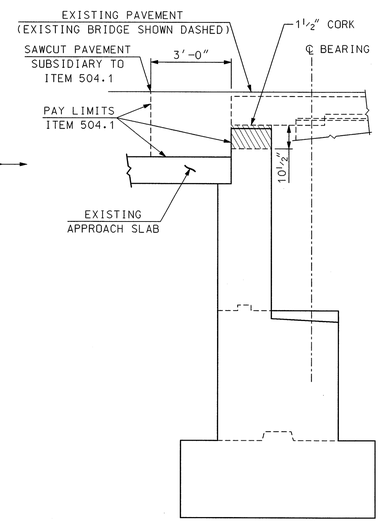

SECTION A-A (REMOVAL)

SCALE: ⅜" = 1'-0"

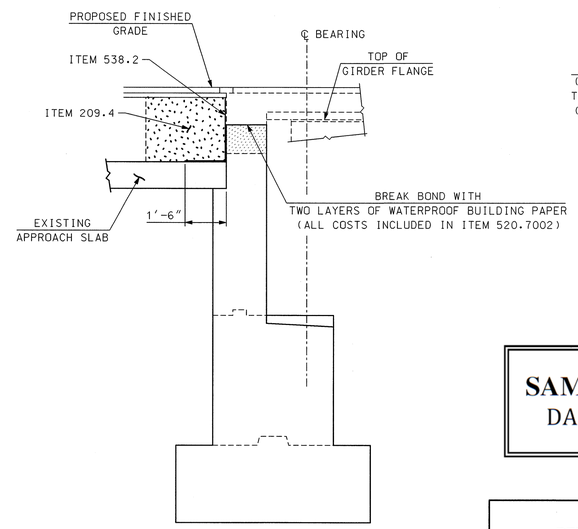

SECTION B-B (RECONSTRUCTION)

SCALE: ⅜" = 1'-0"

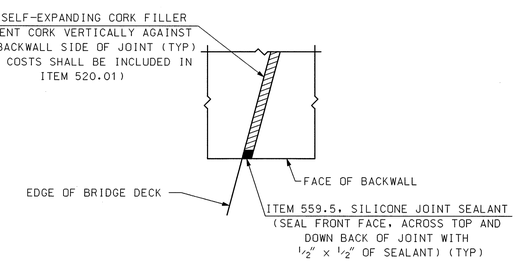

BACKWALL JOINT DETAIL

SCALE: 3" = 1'-0"

SAMPLE PLAN
DATE: 9-2007

STATE OF NEW HAMPSHIRE
DEPARTMENT OF TRANSPORTATION * BUREAU OF BRIDGE DESIGN

TOWN HAVERHILL, N.H. - NEWBURY, VT | BRIDGE NO. 099\149 | STATE PROJECT 14335

LOCATION NEWBURY ROAD over CONNECTICUT RIVER

ABUTMENT A - RECONSTRUCTION

BRIDGE SHEET 4 OF 21

REVISIONS AFTER PROPOSAL		BY	DATE		BY	DATE
	DESIGNED	MGL	6/07	CHECKED	JWP	8/07
	DRAWN	PJP	7/07	CHECKED	JWP	8/07
	QUANTITIES	MGL	9/07	CHECKED	JAT	9/07

FILE NUMBER 108-1-1

ISSUE DATE		FEDERAL PROJECT NO.	SHEET NO.	TOTAL SHEETS
REV. DATE		----------	8	27

SUBDIRECTORY	.DGN LOCATOR	SHEET SCALE
BRC/Abuts	A-ABUTMENT	AS NOTED

...\cadd\BRC\Abuts\A-ABUTMENT.dgn 9/11/2007 12:29:00 PM n18pjp

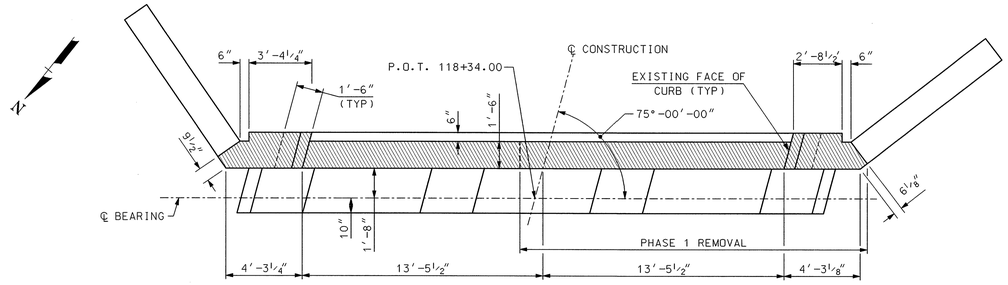

PLAN - ABUTMENT B REMOVAL

SCALE: ¼" = 1'-0"

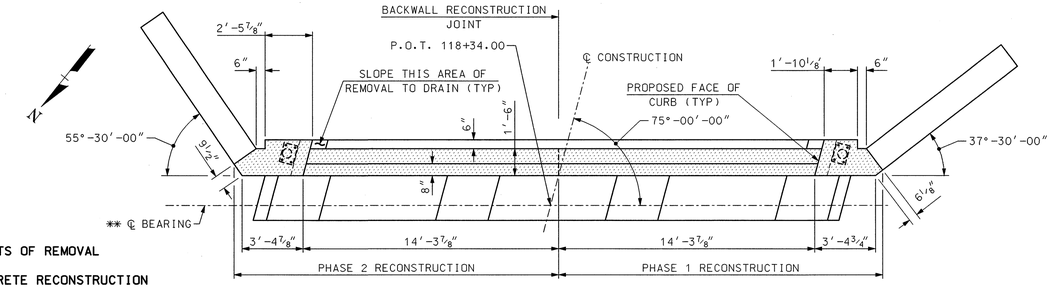

PLAN - ABUTMENT B RECONSTRUCTION

SCALE: ¼" = 1'-0"

LIMITS OF REMOVAL

CONCRETE RECONSTRUCTION

SEE BRIDGE SHEET 6 FOR ADDITIONAL REMOVAL & RECONSTRUCTION DETAILS

* DIMENSIONS GIVEN AT FACE OF BACKWALL

** RE-ESTABLISH LOCATION OF ℄ BEARING ABUTMENT-B SO THAT MASONRY PLATE IS CENTERED UNDER THE GIRDER BEARING STIFFENERS

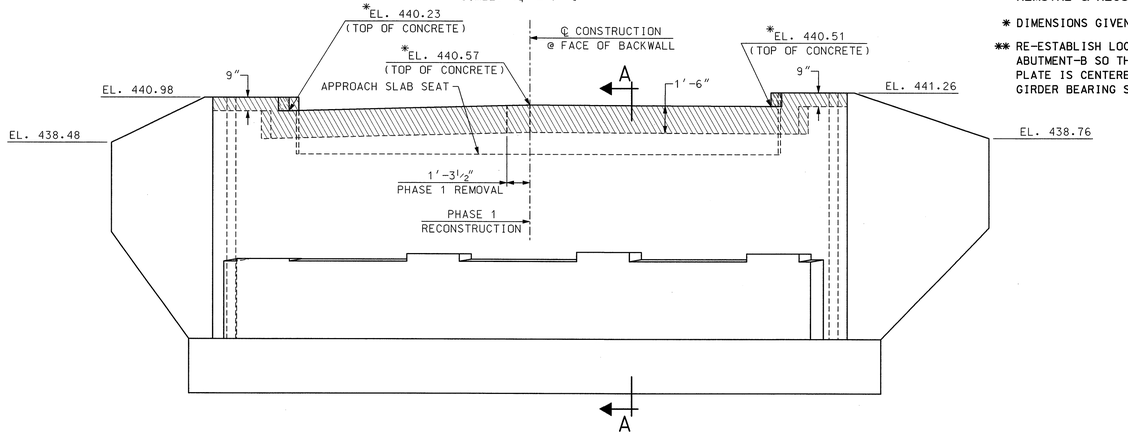

ELEVATION - ABUTMENT B REMOVAL

SCALE: ¼" = 1'-0"

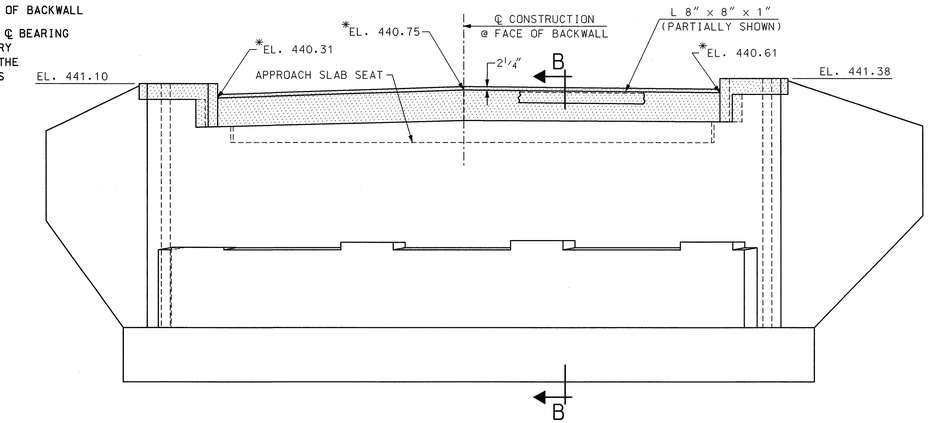

ELEVATION - ABUTMENT B RECONSTRUCTION

SCALE: ¼" = 1'-0"

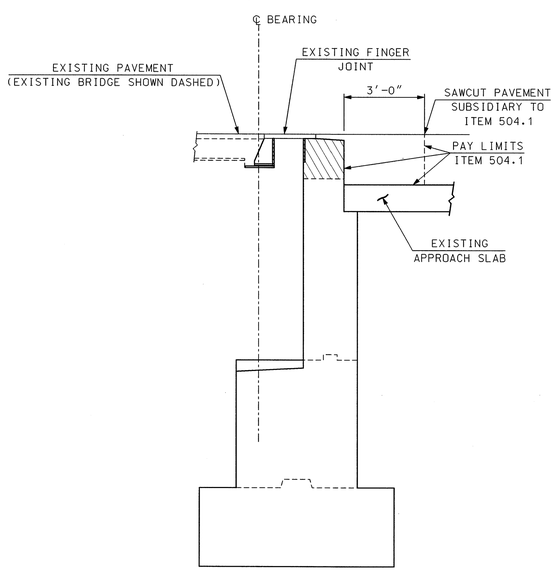

SECTION A-A (REMOVAL)

SCALE: ⅜" = 1'-0"

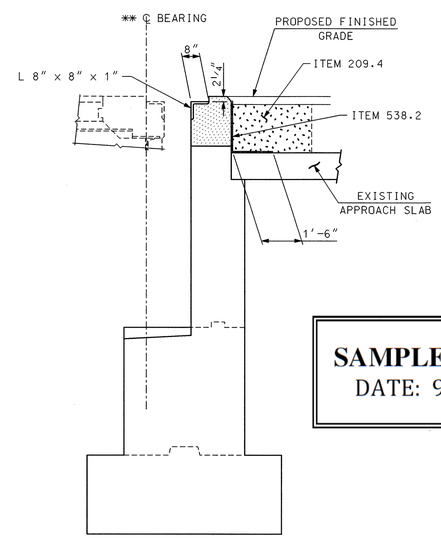

SECTION B-B (RECONSTRUCTION)

SCALE: ⅜" = 1'-0"

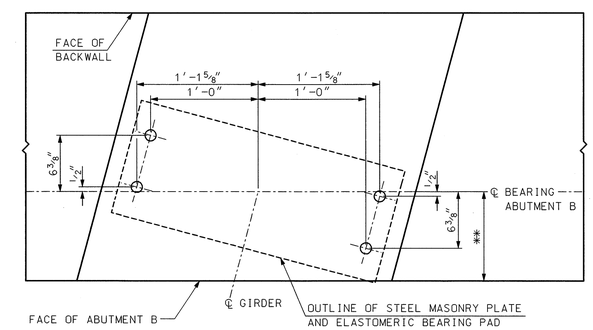

ANCHOR BOLT LAYOUT

SCALE: 1½" = 1'-0"

SAMPLE PLAN
DATE: 9-2007

NOTE: DETAILS AND NOTES MAY NOT BE CURRENT. CLOSELY REVIEW BEFORE USING DETAILS.

SUBDIRECTORY	.DGN LOCATOR	SHEET SCALE
BRC/Abuts	B-ABUTMENT	AS NOTED

STATE OF NEW HAMPSHIRE
DEPARTMENT OF TRANSPORTATION * BUREAU OF BRIDGE DESIGN

TOWN HAVERHILL, N.H. - NEWBURY, VT BRIDGE NO. 099\149 STATE PROJECT 14335

LOCATION NEWBURY ROAD over CONNECTICUT RIVER

ABUTMENT B - RECONSTRUCTION

BRIDGE SHEET 5 OF 21

REVISIONS AFTER PROPOSAL		BY	DATE		BY	DATE
	DESIGNED	MGL	6/07	CHECKED	JWP	8/07
	DRAWN	PJP	7/07	CHECKED	JWP	8/07
	QUANTITIES	MGL	9/07	CHECKED	JAT	9/07
	ISSUE DATE		FEDERAL PROJECT NO.		SHEET NO.	
	REV. DATE		----------		9	

FILE NUMBER 108-1-1

TOTAL SHEETS 27

...\cadd\BRC\Abuts\B-ABUTMENT.dgn 9/11/2007 12:29:01 PM n18pjp

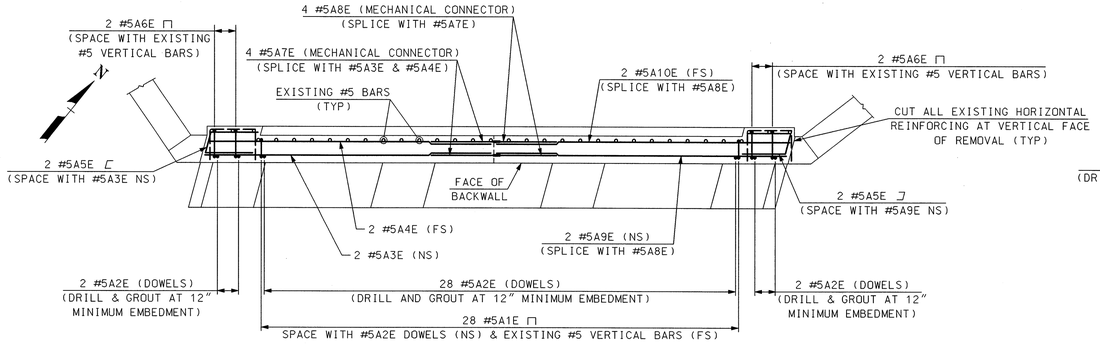

PLAN – ABUTMENT A

SCALE: 1/4" = 1'-0"

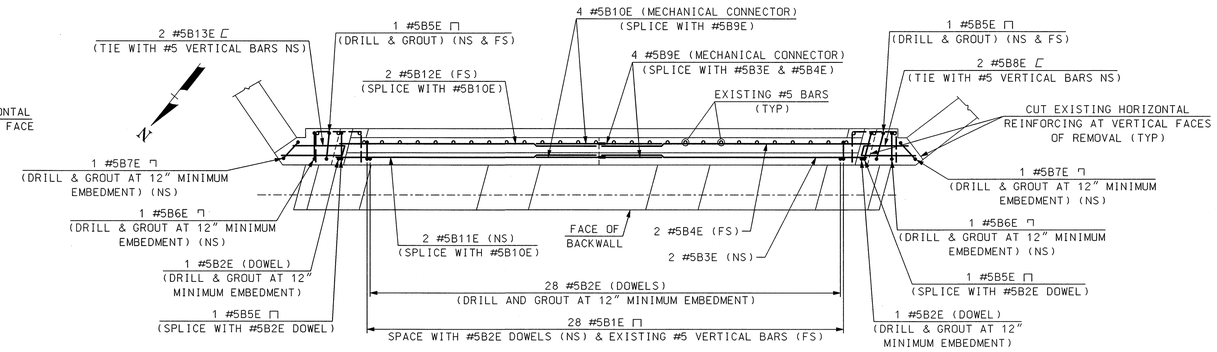

PLAN – ABUTMENT B

SCALE: 1/4" = 1'-0"

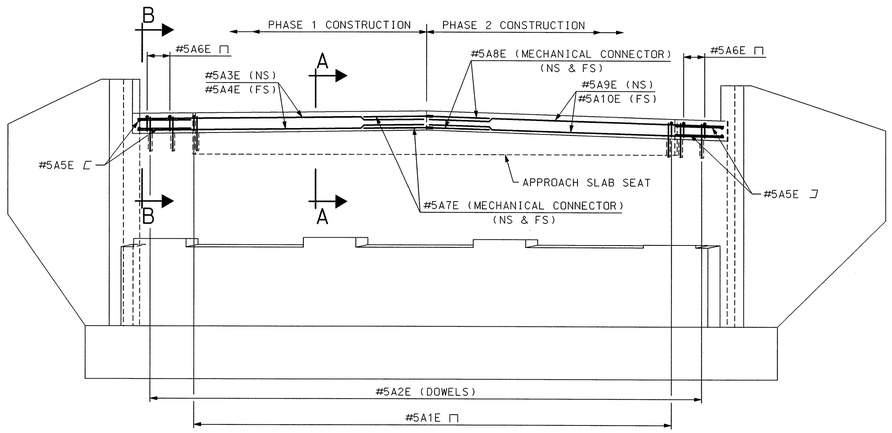

ELEVATION – ABUTMENT A

SCALE: 1/4" = 1'-0"

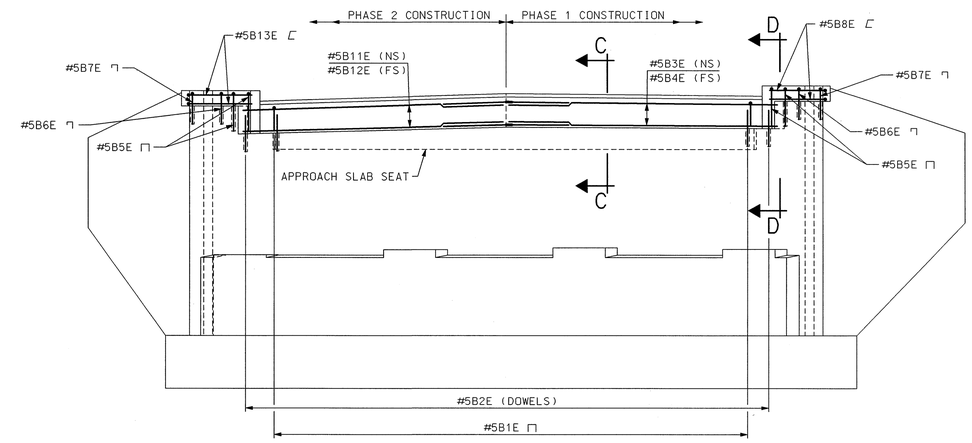

ELEVATION – ABUTMENT B

SCALE: 1/4" = 1'-0"

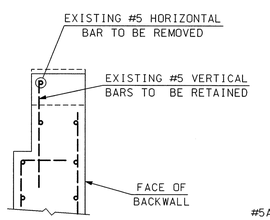

SECTION A–A (REMOVAL)

SCALE: 1/2" = 1'-0"

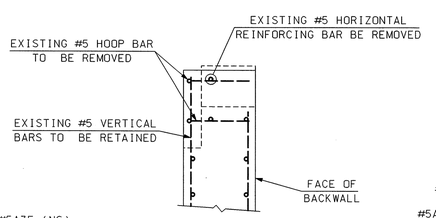

SECTION B–B (REMOVAL)

SCALE: 1/2" = 1'-0"

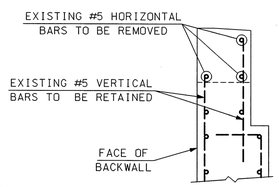

SECTION C–C (REMOVAL)

SCALE: 1/2" = 1'-0"

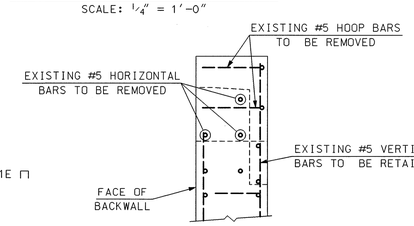

SECTION D–D (REMOVAL)

SCALE: 1/2" = 1'-0"

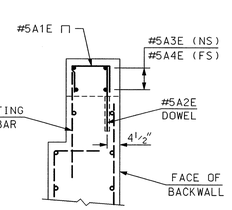

SECTION A–A (RECONSTRUCTION)

SCALE: 1/2" = 1'-0"

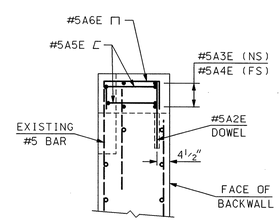

SECTION B–B (RECONSTRUCTION)

SCALE: 1/2" = 1'-0"

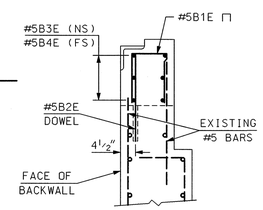

SECTION C–C (RECONSTRUCTION)

SCALE: 1/2" = 1'-0"

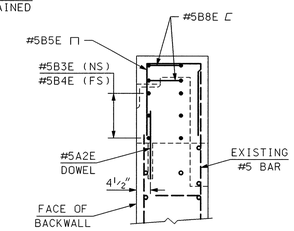

SECTION D–D (RECONSTRUCTION)

SCALE: 1/2" = 1'-0"

NOTE: DETAILS AND NOTES MAY NOT BE CURRENT. CLOSELY REVIEW BEFORE USING DETAILS.

SAMPLE PLAN
DATE: 9-2007

SUBDIRECTORY	.DGN LOCATOR	SHEET SCALE
BRC/Abuts	ABUT REBAR	AS NOTED

STATE OF NEW HAMPSHIRE
DEPARTMENT OF TRANSPORTATION * BUREAU OF BRIDGE DESIGN

TOWN HAVERHILL, N.H. - NEWBURY, VT BRIDGE NO. 099\149 STATE PROJECT 14335

LOCATION NEWBURY ROAD over CONNECTICUT RIVER

ABUTMENT REINFORCEMENT

BRIDGE SHEET 6 OF 21

REVISIONS AFTER PROPOSAL		BY	DATE		BY	DATE
	DESIGNED	MGL	7/07	CHECKED	JWP	8/07
	DRAWN	PJP	7/07	CHECKED	JWP	8/07
	QUANTITIES	PJP	8/07	CHECKED	MGL	9/07
	ISSUE DATE		FEDERAL PROJECT NO.		SHEET NO.	TOTAL SHEETS
	REV. DATE		----------		10	27

FILE NUMBER 108-1-1

...\cadd\BRC\Abuts\ABUT REBAR.dgn 9/11/2007 12:29:02 PM n18pjp

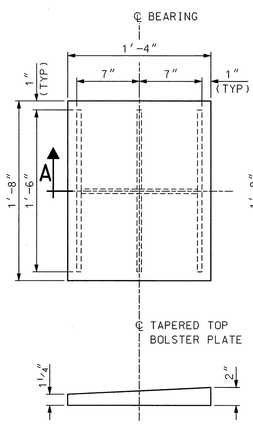

TOP BOLSTER PLATE

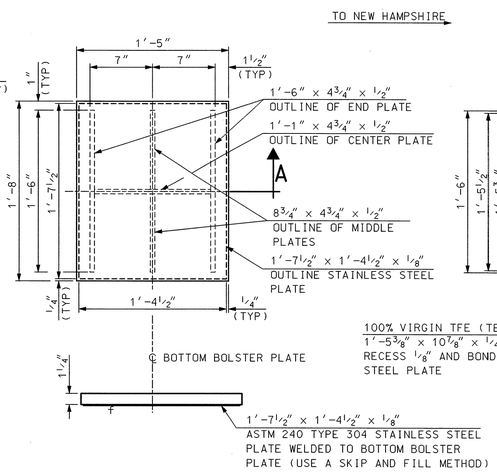

BOTTOM BOLSTER PLATE

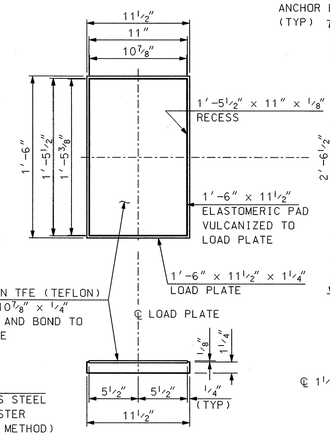

LOAD PLATE

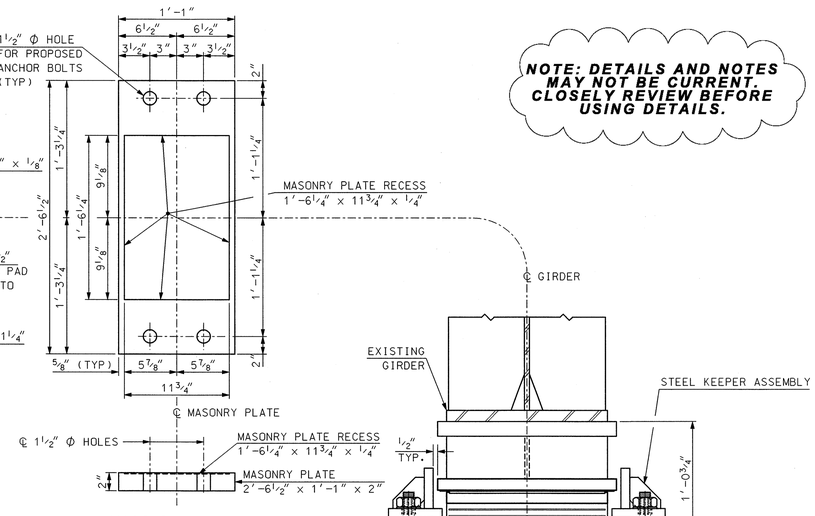

FRONT VIEW

NOTE: DETAILS AND NOTES MAY NOT BE CURRENT. CLOSELY REVIEW BEFORE USING DETAILS.

TEMPERATURE ADJUSTMENT TABLE	
TEMPERATURE	"T" *
15°F	1⅝"
30°F	2¼"
45°F	2¾"
60°F	3⅜"
75°F	3⅞"

* SEE DETAIL A

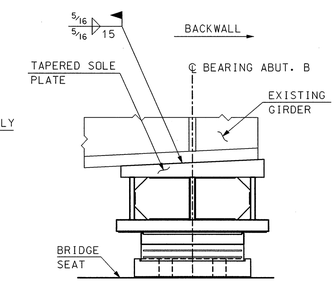

NOTE:
STEEL KEEPER ASSEMBLY NOT SHOWN FOR CLARITY.

SIDE VIEW
SEE BLOW-UP DETAIL A

ELASTOMETRIC BEARING ASSEMBLY - ABUTMENT B (4 REQUIRED)

SCALE: 1½" = 1'-0"

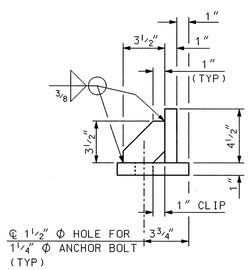

SIDE VIEW

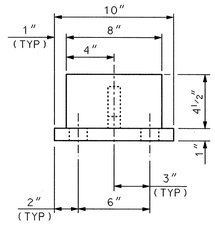

FRONT VIEW

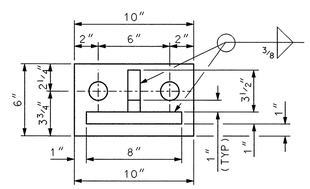

TOP VIEW

STEEL KEEPER ASSEMBLY DETAILS

(8 REQUIRED)
SCALE: 2" = 1'-0"

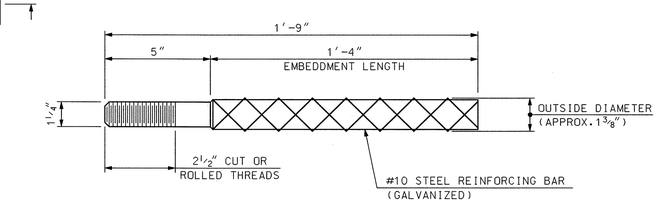

ANCHOR BOLT DETAIL

ABUTMENT B (16 REQUIRED)
SCALE: NTS

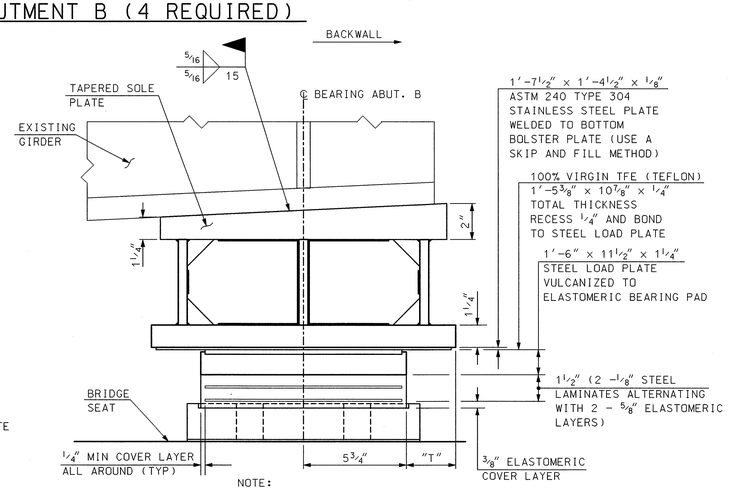

NOTE:
STEEL KEEPER ASSEMBLY
NOT SHOWN FOR CLARITY.

DETAIL A

SCALE: 3' = 1'-0"

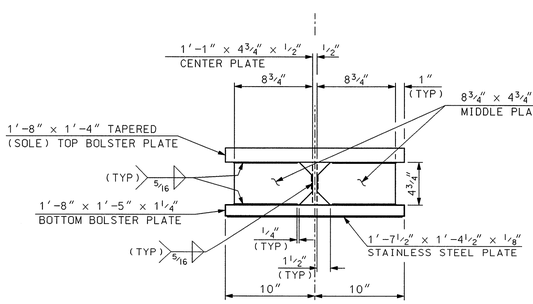

CENTER SECTION A-A

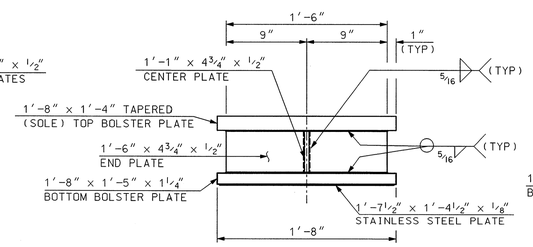

FRONT VIEW

BOLSTER DETAIL

(4 REQUIRED)
SCALE: 1½" = 1'-0"

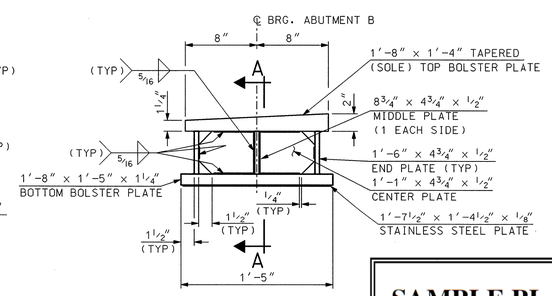

SIDE VIEW

SAMPLE PLAN
DATE: 9-2007

FOR BEARING NOTES SEE BRIDGE SHEET 8

SUBDIRECTORY	.DGN LOCATOR	SHEET SCALE
BRD/SUPER	14335AbutShoes	AS NOTED

STATE OF NEW HAMPSHIRE
DEPARTMENT OF TRANSPORTATION * BUREAU OF BRIDGE DESIGN

TOWN HAVERHILL, N.H. - NEWBURY, VT BRIDGE NO. 099\149 STATE PROJECT 14335
LOCATION NEWBURY ROAD over CONNECTICUT RIVER

ABUTMENT B BEARING DETAILS

REVISIONS AFTER PROPOSAL	BY	DATE		BY	DATE
DESIGNED	MGL	8/07	CHECKED	JWP	8/07
DRAWN	GMC	8/07	CHECKED	MGL	8/07
QUANTITIES	MGL	9/07	CHECKED	JAT	9/07
ISSUE DATE			FEDERAL PROJECT NO.		
REV. DATE			----------		

BRIDGE SHEET 7 OF 21
FILE NUMBER 108-1-1
SHEET NO. 11
TOTAL SHEETS 27

...\BRD\Super\14335AbutShoes.dgn 9/11/2007 12:29:03 PM nibpjp

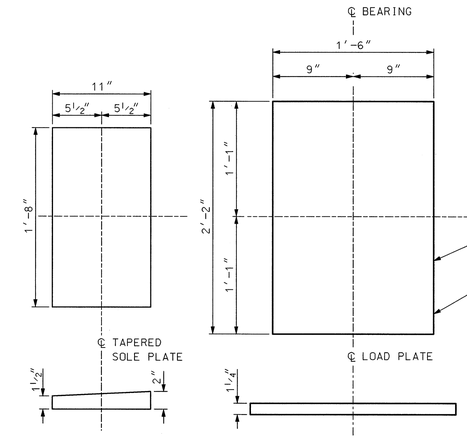

TAPERED SOLE PLATE

TOP & BOTTOM LOAD PLATE

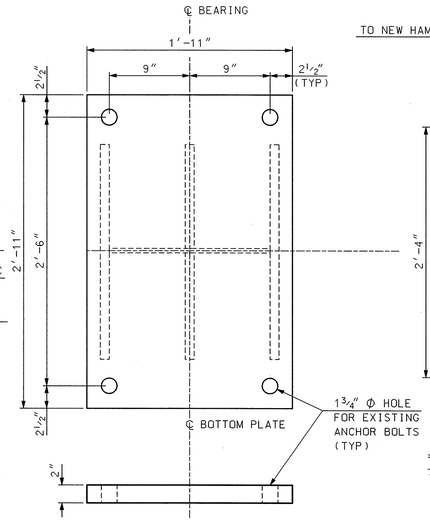

BOTTOM BOLSTER PLATE

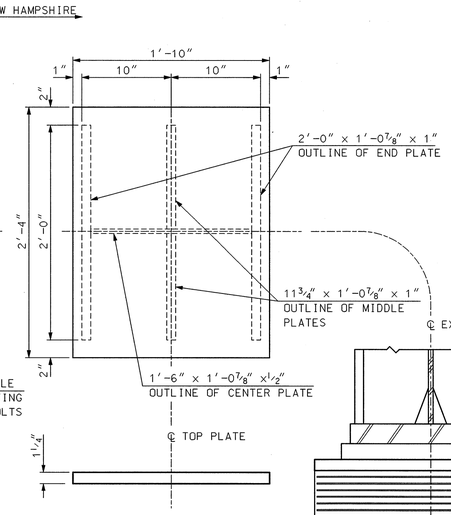

TOP BOLSTER PLATE

ELASTOMERIC BEARING NOTES FOR ABUTMENT B & PIERS

1. ELASTOMERIC BEARING PADS SHALL BE VIRGIN NATURAL RUBBER, HARDNESS (SHORE "A" DUROMETER) OF 60, GRADE 3. (SHEAR MODULUS RANGE 130 psi TO 160 psi)

2. THE COST OF BEARING ASSEMBLIES, INCLUDING ELASTOMER, STEEL PLATES, ANCHOR BOLTS, KEEPER ASSEMBLIES AND BOLSTER SHALL BE PAID FOR AS ELASTOMERIC BEARING ASSEMBLIES (F), ITEM 548.21 (FOR PIERS) AND ITEM 548.22 (FOR ABUTMENT B).

3. ANCHOR BOLTS AT ABUTMENT B SHALL BE REMOVED AND REPLACED. EXISTING ANCHOR BOLTS SHALL BE CUT, GRIND FLUSH TO THE EXISTING BEARING SURFACE AND COATED WITH AN APPROVED EPOXY PAINT, COST SUBSIDIARY TO ITEM 502.101. NEW ANCHOR BOLTS SHALL BE GALVANIZED AND FABRICATED IN ACCORDANCE WITH SECTION 550.2.5 OF THE NHDOT STANDARD SPECIFICATIONS, 2006 AS AMENDED. ALL COSTS SUBSIDIARY TO ITEM 548.22.

4. ELASTOMERIC BEARING DESIGN LOADS (SERVICE I LOADS – DESIGN METHOD A):

ABUT. B	MAXIMUM NON-COMPOSITE DEAD LOAD	59 KIPS
	MAXIMUM SUPERIMPOSED DEAD LOAD	16 KIPS
	MAXIMUM LIVE LOAD	59 KIPS
	ROTATION	0.007 RADIANS
DESIGN MOVEMENT		
	COMPRESSIVE DEFLECTION	0.027"
	TOTAL MOVEMENT (ΔT = 90°F)	3.5"
	DESIGN MOVEMENT (SHEAR DEFORM)	3.5"
PIERS	MAXIMUM NON-COMPOSITE DEAD LOAD	265 KIPS
	MAXIMUM SUPERIMPOSED DEAD LOAD	70 KIPS
	MAXIMUM LIVE LOAD	135 KIPS
	ROTATION	0.007 RADIANS
DESIGN MOVEMENT		
	COMPRESSIVE DEFLECTION	0.048"
	TOTAL MOVEMENT (ΔT = 90°F)	2.38"
	DESIGN MOVEMENT (SHEAR DEFORM)	2.38"

5. EXISTING ANCHOR BOLTS FOR PIERS SHALL BE REPLACED IF THEIR CONDITION HAS DETERIORATED (PER CONTRACT ADMINISTRATOR). PAID UNDER ITEM 1002.1, REPAIRS AND REPLACEMENTS AS NEEDED. ANCHOR BOLTS FOR ABUTMENT B SHALL BE REPLACED.

6. ANCHOR BOLTS SHALL BE GALVANIZED AND FABRICATED IN ACCORDANCE WITH SECTION 550.2.5 OF THE NHDOT STANDARD SPECIFICATIONS, 2006, AS AMENDED.

7. BOLSTER PLATES, SOLE PLATES AND LOAD PLATES SHALL CONFORM TO AASHTO M 270 GRADE 50 (ASTM A709 GRADE 50) AND SHALL BE PAINTED. THE STEEL REINFORCING PLATES SHALL CONFORM TO AASHTO M 270 GRADE 50 (ASTM A709 GRADE 50).

8. SURFACE FINISH OF ALL PLATES SHALL BE IN ACCORDANCE WITH AASHTO LRFD BRIDGE CONSTRUCTION SPECIFICATIONS, SECTION 11.4.6.

9. LOAD PLATES SHALL BE VULCANIZED TO THE ELASTOMER PRIOR TO PAINTING. ALL SURFACES THAT ARE TO BE BONDED TO THE ELASTOMER SHALL BE BLAST CLEAN AS SPECIFIED IN SSPC-SP 10 PRIOR TO VULCANIZING.

10. THE STAINLESS STEEL SURFACE IN CONTACT WITH THE TEFLON SHALL HAVE A 2B FINISH.

11. THE TEMPERATURE OF THE STEEL ADJACENT TO THE ELASTOMER SHALL NOT EXCEED 200°F DURING WELDING PROCESS. TEMPERATURE SHALL BE CONTROLLED BY WELDING PROCEDURES AND TEMPERATURE INDICATING CRAYON, OR OTHER DEVICES APPROVED BY THE ENGINEER). ALL PLATES SHALL BE FLAT AND TRUE AFTER WELDING.

12. FOLLOWING THE MANUFACTURE OF ELASTOMERIC BEARINGS AND VERIFICATION OF THE INTERNAL STEEL LAMINATES, THE PIN GROOVE OPENINGS SHALL BE COATED WITH AN APPROVED ASPHALTIC SEALER AND THE SPACE FILLED WITH SILICONE CAULKING.

13. BEARINGS SHOULD BE INSTALLED AT TEMPERTURES BETWEEN 20°F AND 70°F. INSTALLATION TEMPERATURES OUTSIDE THIS RANGE WILL REQUIRE ADJUSTMENT.

14. THE MANUFACTURER SHALL CLEARLY MARK THE FRONT OF THE BEARING ASSEMBLY TO ENSURE PROPER ORIENTATION IN THE FIELD.

NOTE: DETAILS AND NOTES MAY NOT BE CURRENT. CLOSELY REVIEW BEFORE USING DETAILS.

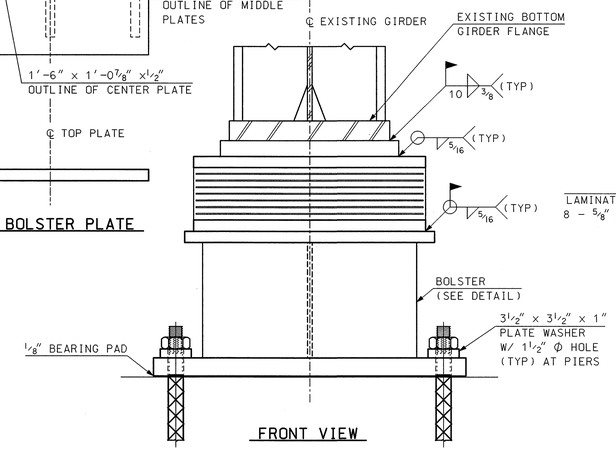

FRONT VIEW

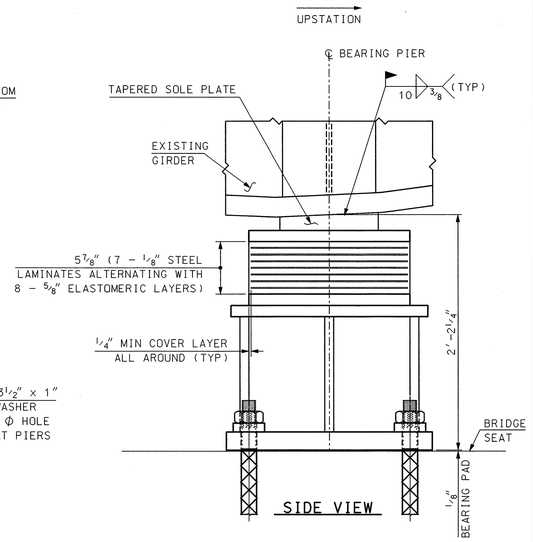

SIDE VIEW

ELASTOMERIC BEARING DETAILS

(8 ASSEMBLIES REQUIRED, 4 @ PIER 1 AND 4 @ PIER 2)
SCALE: 1½" = 1'-0"

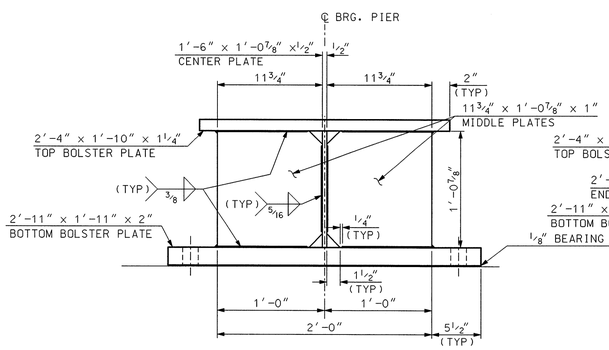

CENTER SECTION A-A

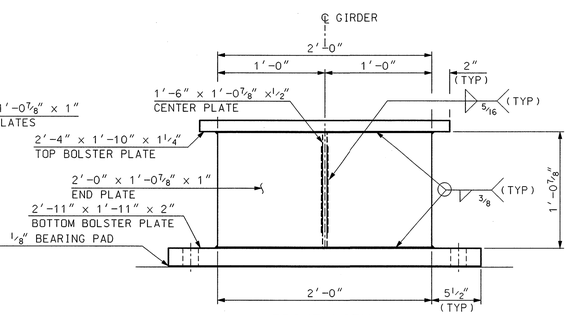

FRONT VIEW

BOLSTER DETAILS

(8 REQUIRED)
SCALE: 1½" = 1'-0"

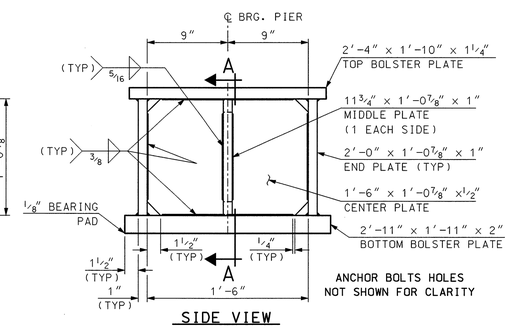

SIDE VIEW

SAMPLE PLAN
DATE: 9-2007

SUBDIRECTORY	.DGN LOCATOR	SHEET SCALE
BRC/SUPER	14335PierBearing	AS NOTED

STATE OF NEW HAMPSHIRE
DEPARTMENT OF TRANSPORTATION * BUREAU OF BRIDGE DESIGN

TOWN HAVERHILL, N.H. - NEWBURY, VT BRIDGE NO. 099\149 STATE PROJECT 14335

LOCATION NEWBURY ROAD over CONNECTICUT RIVER

PIER ELASTOMERIC BEARING DETAILS

REVISIONS AFTER PROPOSAL		BY	DATE		BY	DATE
	DESIGNED	MGL	8/07	CHECKED	JWP	8/07
	DRAWN	GMC	8/07	CHECKED	MGL	8/07
	QUANTITIES	MGL	9/07	CHECKED	JAT	9/07
	ISSUE DATE		FEDERAL PROJECT NO.		SHEET NO.	
	REV. DATE		----------		12	

BRIDGE SHEET 8 OF 21
FILE NUMBER 108-1-1
TOTAL SHEETS 27

...\BRC\Super\14335PierBearing.dgn 9/11/2007 12:29:07 PM nibpjp

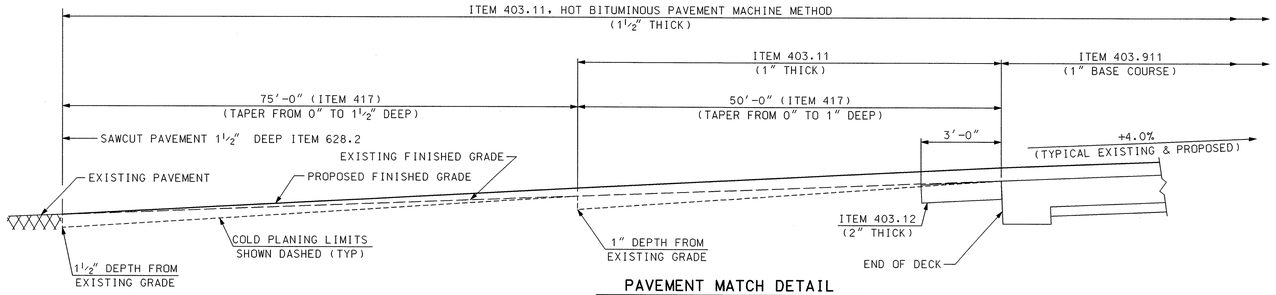

PAVEMENT MATCH DETAIL

NOT TO SCALE

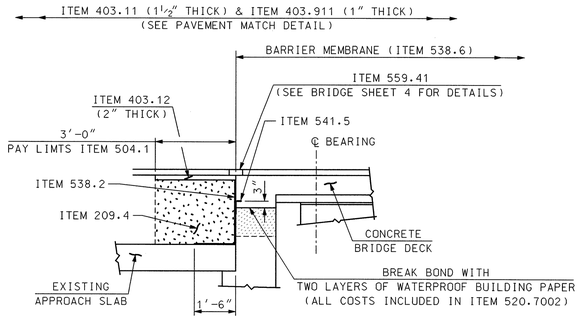

PROPOSED FIXED END DECK HAUNCH DETAIL

SCALE: ⅜" = 1'-0"

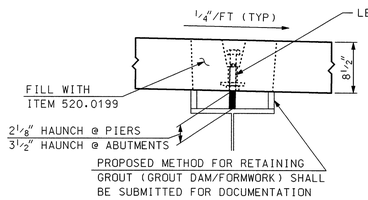

HAUNCH DETAIL

SCALE: 1" = 1'-0"

ELEVATIONS AT BOTTOM OF CONCRETE DECK PANELS																				
										SPAN 1										
GIRDER	Abut A	1.05	1.10	1.15	1.20	1.25	1.30	1.35	1.40	1.45	1.50	1.55	1.60	1.65	1.70	1.75	1.80	1.85	1.90	1.95	Pier 1
#1	420.102	420.398	420.695	420.991	421.286	421.581	421.874	422.167	422.459	422.750	423.041	423.331	423.620	423.909	424.199	424.488	424.778	425.068	425.359	425.650	425.942
#2	420.382	420.678	420.975	421.271	421.566	421.861	422.154	422.447	422.739	423.030	423.321	423.611	423.900	424.189	424.479	424.768	425.058	425.348	425.639	425.930	426.222
#3	420.482	420.778	421.075	421.371	421.666	421.961	422.254	422.547	422.839	423.130	423.421	423.711	424.000	424.289	424.579	424.868	425.158	425.448	425.739	426.030	426.322
#4	420.402	420.698	420.995	421.291	421.586	421.881	422.174	422.467	422.759	423.050	423.341	423.631	423.920	424.209	424.499	424.788	425.078	425.368	425.659	425.950	426.242
										SPAN 2										
GIRDER	Pier 1	2.05	2.10	2.15	2.20	2.25	2.30	2.35	2.40	2.45	2.50	2.55	2.60	2.65	2.70	2.75	2.80	2.85	2.90	2.95	Pier 2
#1	425.942	426.330	426.720	427.111	427.502	427.894	428.286	428.678	429.069	429.459	429.848	430.235	430.621	431.006	431.390	431.774	432.159	432.543	432.928	433.315	433.702
#2	426.222	426.610	427.000	427.391	427.782	428.174	428.566	428.958	429.349	429.739	430.128	430.515	430.901	431.286	431.670	432.054	432.439	432.823	433.208	433.595	433.982
#3	426.322	426.710	427.100	427.491	427.882	428.274	428.666	429.058	429.449	429.839	430.228	430.615	431.001	431.386	431.770	432.154	432.539	432.923	433.308	433.695	434.082
#4	426.242	426.630	427.020	427.411	427.802	428.194	428.586	428.978	429.369	429.759	430.148	430.535	430.921	431.306	431.690	432.074	432.459	432.843	433.228	433.615	434.002
										SPAN 3										
GIRDER	Pier 2	3.05	3.10	3.15	3.20	3.25	3.30	3.35	3.40	3.45	3.50	3.55	3.60	3.65	3.70	3.75	3.80	3.85	3.90	3.95	Abut B
#1	433.702	433.994	434.287	434.580	434.874	435.168	435.463	435.757	436.052	436.347	436.641	436.934	437.227	437.519	437.810	438.101	438.390	438.679	438.967	439.254	439.542
#2	433.982	434.274	434.567	434.860	435.154	435.448	435.743	436.037	436.332	436.627	436.921	437.214	437.507	437.799	438.090	438.381	438.670	438.959	439.247	439.534	439.822
#3	434.082	434.374	434.667	434.960	435.254	435.548	435.843	436.137	436.432	436.727	437.021	437.314	437.607	437.899	438.190	438.481	438.770	439.059	439.347	439.634	439.922
#4	434.002	434.294	434.587	434.880	435.174	435.468	435.763	436.057	436.352	436.647	436.941	437.234	437.527	437.819	438.110	438.401	438.690	438.979	439.267	439.554	439.842

ELEVATIONS AT TOP OF CONCRETE DECK PANELS																				
										SPAN 1										
GIRDER	Abut A	1.05	1.10	1.15	1.20	1.25	1.30	1.35	1.40	1.45	1.50	1.55	1.60	1.65	1.70	1.75	1.80	1.85	1.90	1.95	Pier 1
#1	420.810	421.107	421.403	421.699	421.994	422.289	422.583	422.876	423.168	423.459	423.749	424.039	424.329	424.618	424.907	425.196	425.486	425.776	426.067	426.358	426.650
#2	421.090	421.387	421.683	421.979	422.274	422.569	422.863	423.156	423.448	423.739	424.029	424.319	424.609	424.898	425.187	425.476	425.766	426.056	426.347	426.638	426.930
#3	421.190	421.487	421.783	422.079	422.374	422.669	422.963	423.256	423.548	423.839	424.129	424.419	424.709	424.998	425.287	425.576	425.866	426.156	426.447	426.738	427.030
#4	421.110	421.407	421.703	421.999	422.294	422.589	422.883	423.176	423.468	423.759	424.049	424.339	424.629	424.918	425.207	425.496	425.786	426.076	426.367	426.658	426.950
										SPAN 2										
GIRDER	Pier 1	2.05	2.10	2.15	2.20	2.25	2.30	2.35	2.40	2.45	2.50	2.55	2.60	2.65	2.70	2.75	2.80	2.85	2.90	2.95	Pier 2
#1	426.650	427.039	427.429	427.819	428.211	428.603	428.995	429.386	429.777	430.167	430.556	430.943	431.329	431.714	432.099	432.483	432.867	433.251	433.637	434.023	434.410
#2	426.930	427.319	427.709	428.099	428.491	428.883	429.275	429.666	430.057	430.447	430.836	431.223	431.609	431.994	432.379	432.763	433.147	433.531	433.917	434.303	434.690
#3	427.030	427.419	427.809	428.199	428.591	428.983	429.375	429.766	430.157	430.547	430.936	431.323	431.709	432.094	432.479	432.863	433.247	433.631	434.017	434.403	434.790
#4	426.950	427.339	427.729	428.119	428.511	428.903	429.295	429.686	430.077	430.467	430.856	431.243	431.629	432.014	432.399	432.783	433.167	433.551	433.937	434.323	434.710
										SPAN 3										
GIRDER	Pier 2	3.05	3.10	3.15	3.20	3.25	3.30	3.35	3.40	3.45	3.50	3.55	3.60	3.65	3.70	3.75	3.80	3.85	3.90	3.95	Abut B
#1	434.410	434.702	434.995	435.288	435.582	435.876	436.171	436.466	436.761	437.055	437.349	437.643	437.936	438.228	438.519	438.809	439.098	439.387	439.675	439.963	440.250
#2	434.690	434.982	435.275	435.568	435.862	436.156	436.451	436.746	437.041	437.335	437.629	437.923	438.216	438.508	438.799	439.089	439.378	439.667	439.955	440.243	440.530
#3	434.790	435.082	435.375	435.668	435.962	436.256	436.551	436.846	437.141	437.435	437.729	438.023	438.316	438.608	438.899	439.189	439.478	439.767	440.055	440.343	440.630
#4	434.710	435.002	435.295	435.588	435.882	436.176	436.471	436.766	437.061	437.355	437.649	437.943	438.236	438.528	438.819	439.109	439.398	439.687	439.975	440.263	440.550

PANEL ELEVATION NOTES

(1) AFTER THE PRECAST PANELS ARE ERECTED BUT BEFORE THE DECK IS POST-TENSIONED AND BLOCKOUTS ARE GROUTED. THE PANELS SHALL BE ADJUSTED TO THE ELEVATIONS IN THE TABLES AT THE POINTS INDICATED. SEE PANEL ELEVATIONS TABLES ON THIS SHEET.

(2) ELEVATIONS SHOWN IN TABLES ARE TOP AND BOTTOM OF PANEL ELEVATIONS ADJUSTED FOR TOTAL SUPERIMPOSED DEAD LOAD DEFLECTION.

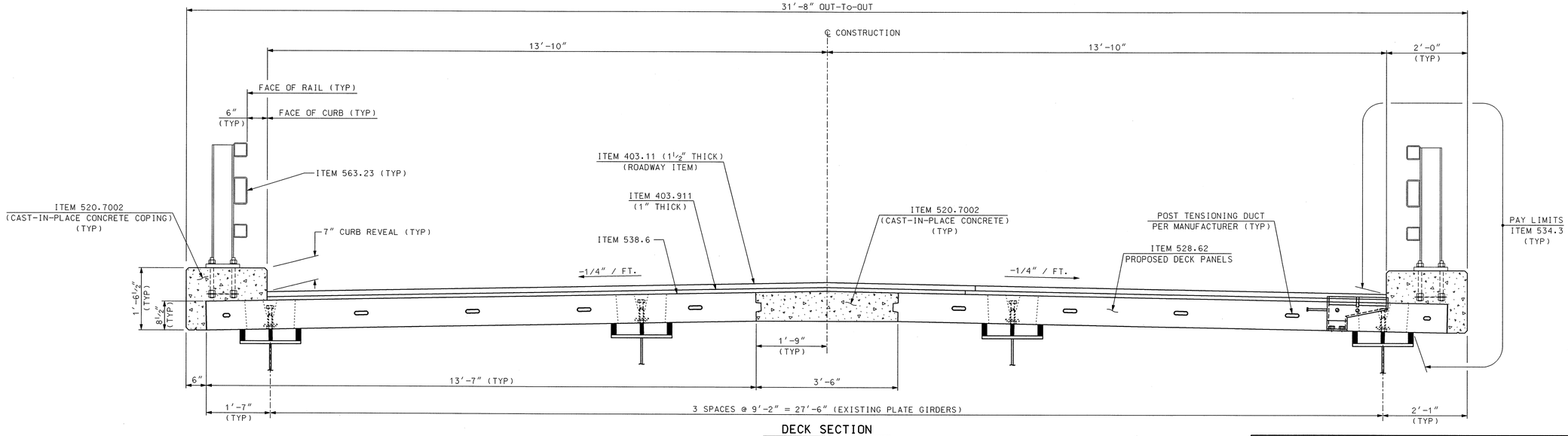

DECK SECTION

SCALE: ¾" = 1'-0"

NOTE: DETAILS AND NOTES MAY NOT BE CURRENT. CLOSELY REVIEW BEFORE USING DETAILS.

SAMPLE PLAN
DATE: 9-2007

SUBDIRECTORY	.DGN LOCATOR	SHEET SCALE
BRC/Super	14335DECKSECT	AS NOTED

STATE OF NEW HAMPSHIRE
DEPARTMENT OF TRANSPORTATION * BUREAU OF BRIDGE DESIGN

TOWN HAVERHILL, N.H. - NEWBURY, VT BRIDGE NO. 099\149 STATE PROJECT 14335
LOCATION NEWBURY ROAD over CONNECTICUT RIVER

DECK SECTION & DETAILS

BRIDGE SHEET 9 OF 21

REVISIONS AFTER PROPOSAL	BY	DATE		BY	DATE
DESIGNED	MGL	2/07	CHECKED	JWP	8/07
DRAWN	PJP/GMC	3/07	CHECKED	JWP	8/07
QUANTITIES	MGL	9/07	CHECKED	JAT	9/07
ISSUE DATE		FEDERAL PROJECT NO.		SHEET NO.	TOTAL SHEETS
REV. DATE		----------		13	27

FILE NUMBER 108-1-1

...\BRC\Super\14335DECKSECT.dgn 9/11/2007 12:29:08 PM n18pjp

* DIMENSIONS SHOWN ARE CONCEPTUAL ONLY. FABRICATOR SHALL DETERMINE EXACT LOCATION, AND SIZE AND SHAPE OF POST-TENSIONING DUCTS.

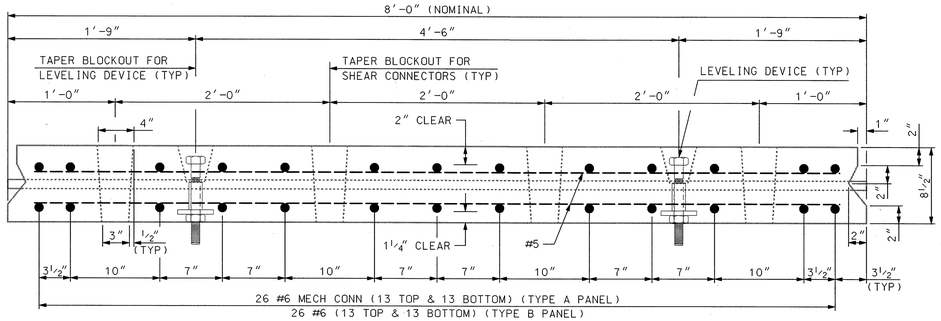

SECTION D-D MASONRY & REINFORCING

SCALE: 1½" = 1'-0"

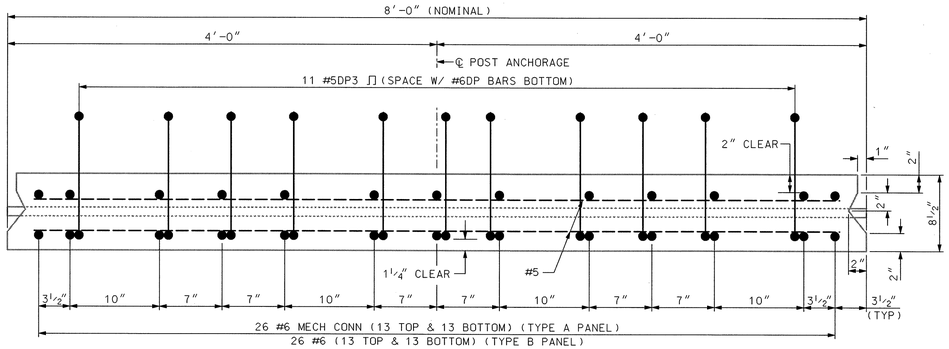

SECTION C-C MASONRY & REINFORCING

SCALE: 1½" = 1'-0" (TYPE A PANEL SHOWN)

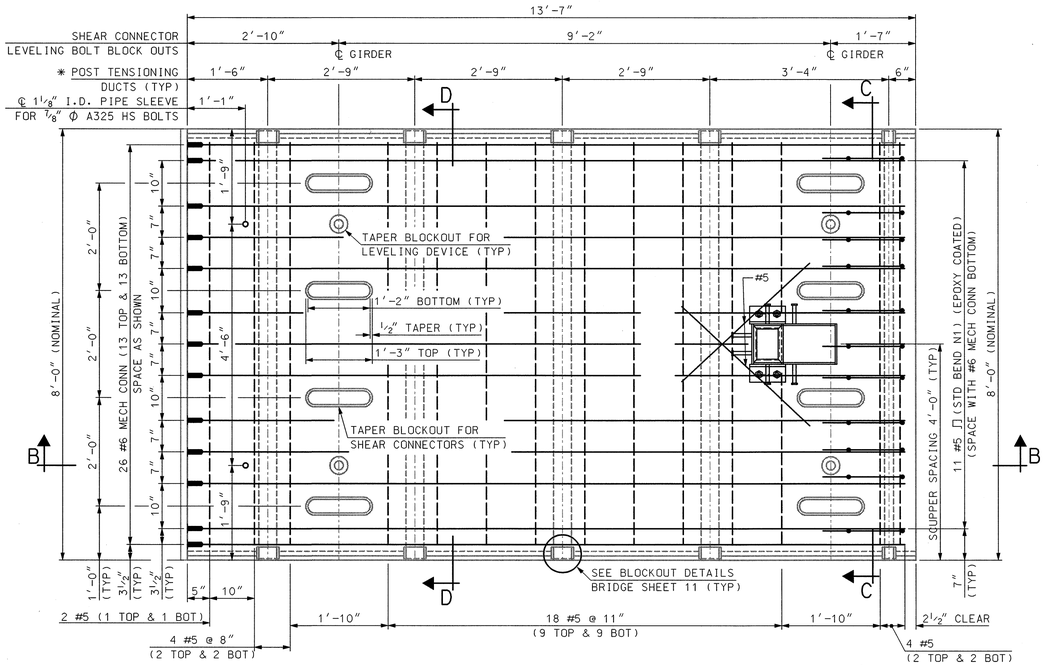

PLAN - FULL DEPTH PANEL MASONRY (TYPE A) (57 REQ'D)

(4 REQUIRED WITH SCUPPERS)
(53 REQUIRED WITHOUT SCUPPERS)
SCALE: ¾" = 1'-0"

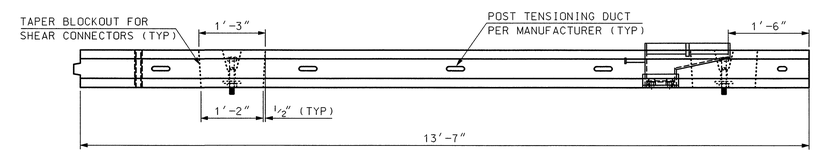

SECTION B-B FULL DEPTH PANEL MASONRY (TYPE A)

SCALE: ¾" = 1'-0"

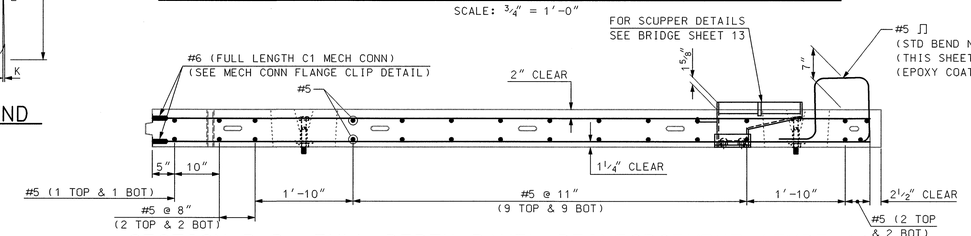

SECTION B-B FULL DEPTH PANEL REINFORCEMENT (TYPE A)

SCALE: ¾" = 1'-0"

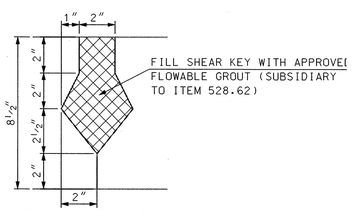

SHEAR KEY DETAIL

SCALE: 3" = 1'-0"

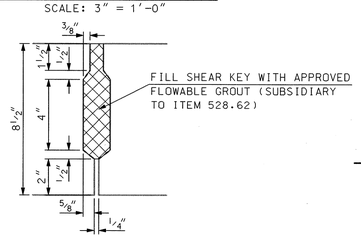

ALTERNATE SHEAR KEY DETAIL

SCALE: 3" = 1'-0"

NOTE: DETAILS AND NOTES MAY NOT BE CURRENT. CLOSELY REVIEW BEFORE USING DETAILS.

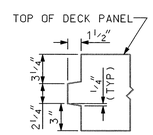

PANEL SHEAR KEY

N.T.S.

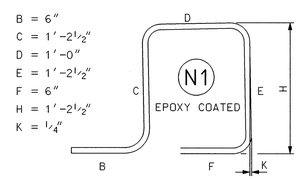

REINFORCING BEND

SCALE: 1½" = 1'-0"

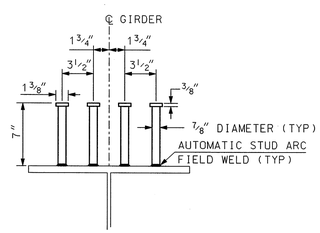

SHEAR CONNECTOR DETAIL

(FOR DECK PANELS)
SCALE: 1½" = 1'-0"

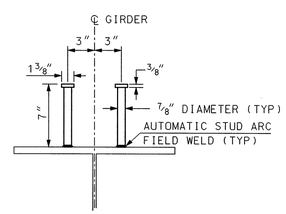

SHEAR CONNECTOR DETAIL

(FOR CAST IN PLACE PORTION OF DECK)
SCALE: 1½" = 1'-0"

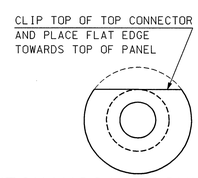

MECHANICAL CONNECTOR FLANGE CLIP DETAIL

N.T.S.

SCUPPERS ARE IN FOUR TYPE A DECK PANELS ONLY
SEE PANEL LAYOUT FOR SCUPPER PANEL PLACEMENT

SAMPLE PLAN
DATE: 9-2007

SUBDIRECTORY	.DGN LOCATOR	SHEET SCALE
BrD\Super\	143358FtPanel	AS NOTED

STATE OF NEW HAMPSHIRE
DEPARTMENT OF TRANSPORTATION * BUREAU OF BRIDGE DESIGN

TOWN HAVERHILL, N.H. - NEWBURY, VT | BRIDGE NO. 099\149 | STATE PROJECT 14335
LOCATION NEWBURY ROAD over CONNECTICUT RIVER

TYPE A DECK PANEL DETAILS

REVISIONS AFTER PROPOSAL	BY	DATE		BY	DATE
DESIGNED	MGL	8/07	CHECKED	JWP	9/07
DRAWN	GMC	8/07	CHECKED	MGL	9/07
QUANTITIES	MGL	9/07	CHECKED	JAT	9/07
ISSUE DATE		FEDERAL PROJECT NO.		SHEET NO.	
REV. DATE		----------		14	

BRIDGE SHEET 10 OF 21
FILE NUMBER 108-1-1
TOTAL SHEETS 27

...\BRC\Super\143358FtPanel.dgn 9/11/2007 12:29:11 PM n18pjp

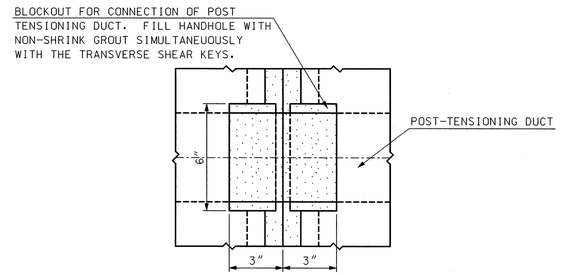

BLOCKOUT FOR POST-TENSIONING DUCT PLAN

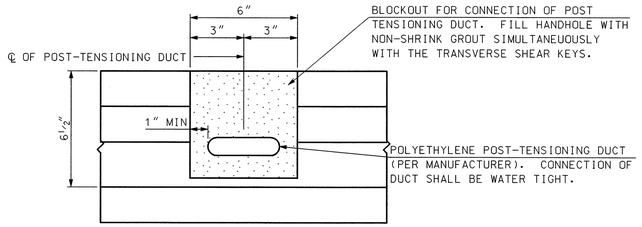

SECTION B-B

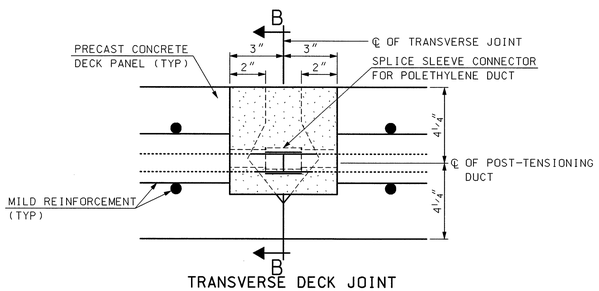

TRANSVERSE DECK JOINT AT POST TENSIONING DUCT

BLOCKOUT DETAILS

SCALE: 3" = 1'-0"

FOR SECTION C-C AND SECTION D-D SEE BRIDGE SHEET 10

NOTE: DETAILS AND NOTES MAY NOT BE CURRENT. CLOSELY REVIEW BEFORE USING DETAILS.

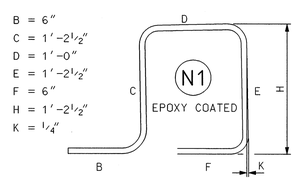

REINFORCING BEND

SCALE: 1½" = 1'-0"

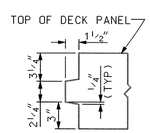

PANEL SHEAR KEY

N.T.S.

* DIMENSIONS SHOWN ARE CONCEPTUAL ONLY. FABRICATOR SHALL DETERMINE EXACT LOCATION, AND SIZE AND SHAPE OF POST-TENSIONING DUCTS.

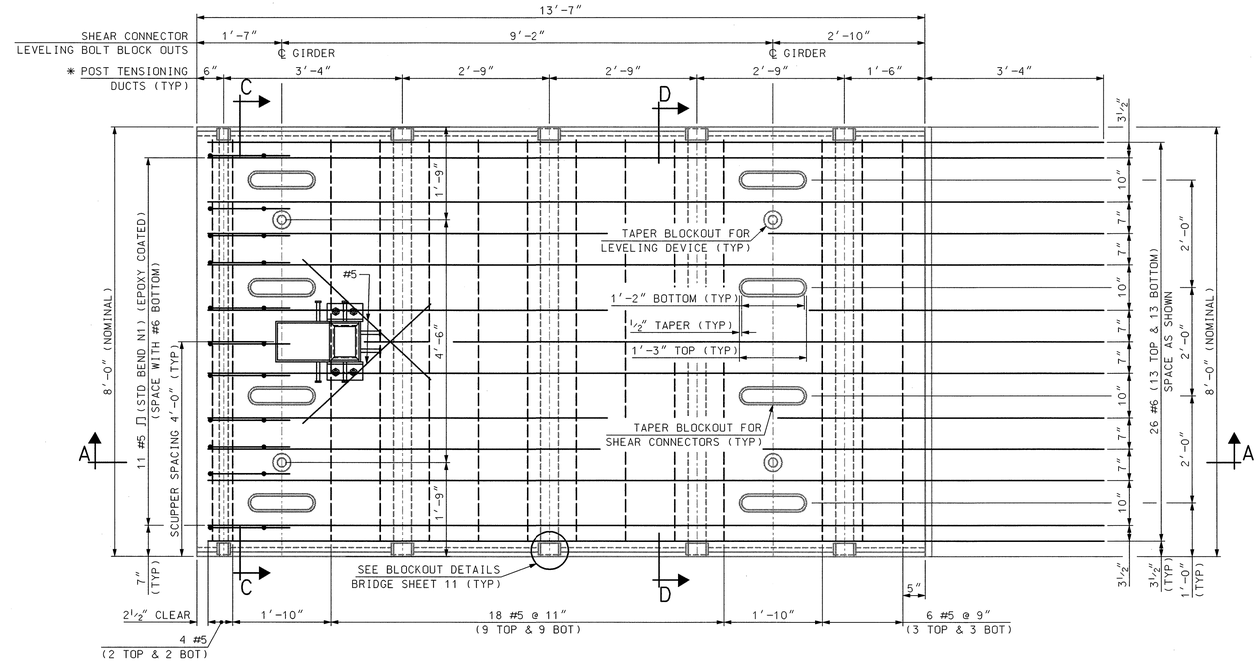

PLAN - FULL DEPTH PANEL MASONRY (TYPE B) (57 REQ'D)

(4 REQUIRED WITH SCUPPERS)
(53 REQUIRED WITHOUT SCUPPERS)
SCALE: ¾" = 1'-0"

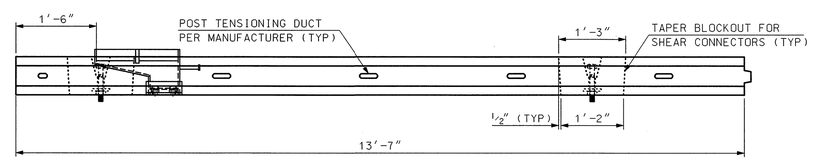

SECTION A-A FULL DEPTH PANEL MASONRY (TYPE B)

SCALE: ¾" = 1'-0"

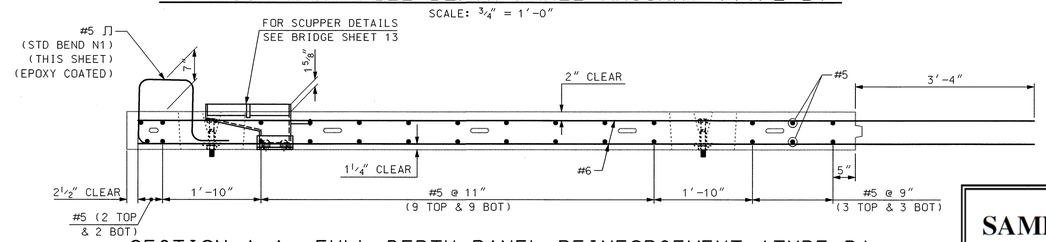

SECTION A-A FULL DEPTH PANEL REINFORCEMENT (TYPE B)

SCALE: ¾" = 1'-0"

SAMPLE PLAN
DATE: 9-2007

SCUPPERS ARE IN FOUR TYPE B DECK PANELS ONLY
SEE PANEL LAYOUT FOR SCUPPER PANEL PLACEMENT

SUBDIRECTORY	.DGN LOCATOR	SHEET SCALE
BrD\Super\	143358FtPanel	AS NOTED

STATE OF NEW HAMPSHIRE
DEPARTMENT OF TRANSPORTATION * BUREAU OF BRIDGE DESIGN

TOWN HAVERHILL, N.H. - NEWBURY, VT BRIDGE NO. 099\149 STATE PROJECT 14335
LOCATION NEWBURY ROAD over CONNECTICUT RIVER

TYPE B DECK PANEL DETAILS

REVISIONS AFTER PROPOSAL		BY	DATE		BY	DATE
	DESIGNED	MGL	8/07	CHECKED	JWP	9/07
	DRAWN	GMC	8/07	CHECKED	MGL	9/07
	QUANTITIES	MGL	9/07	CHECKED	JAT	9/07
	ISSUE DATE		FEDERAL PROJECT NO.		SHEET NO.	
	REV. DATE		----------		15	

BRIDGE SHEET 11 OF 21
FILE NUMBER 108-1-1
TOTAL SHEETS 27

...\BRC\Super\143358FtPanel.dgn 9/11/2007 12:29:11 PM n18pjp

* DIMENSIONS SHOWN ARE CONCEPTUAL ONLY. FABRICATOR SHALL DETERMINE EXACT LOCATION, AND SIZE AND SHAPE OF POST-TENSIONING DUCTS.

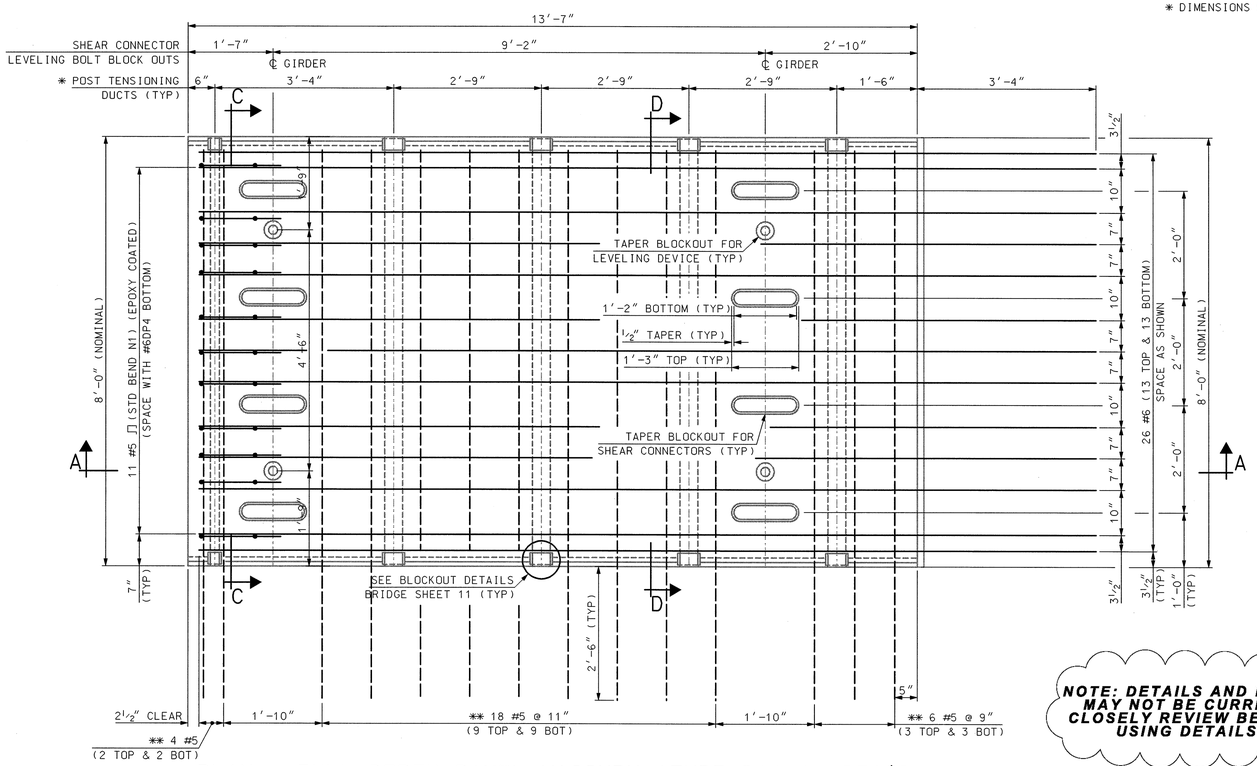

PLAN - FULL DEPTH PANEL MASONRY (TYPE B1) (1 REQ'D)

SCALE: 3/4" = 1'-0"

NOTE: DETAILS AND NOTES MAY NOT BE CURRENT. CLOSELY REVIEW BEFORE USING DETAILS.

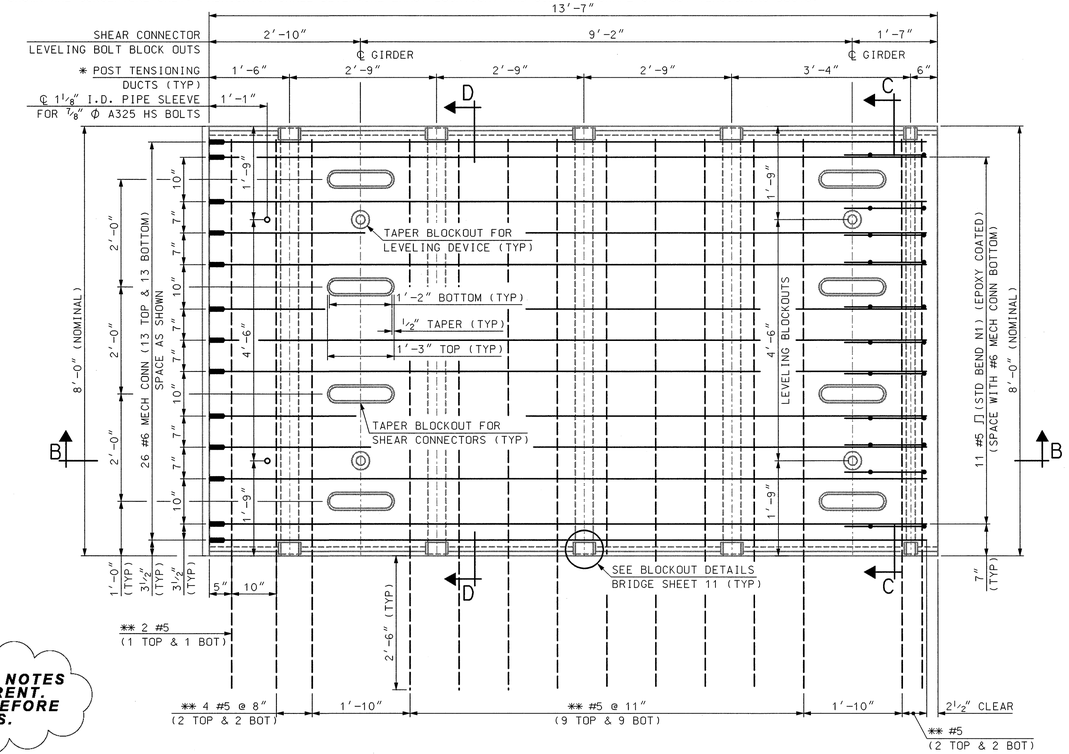

PLAN - FULL DEPTH PANEL MASONRY (TYPE A1) (1 REQ'D)

SCALE: 3/4" = 1'-0"

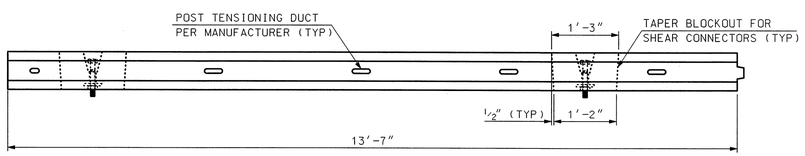

SECTION A-A FULL DEPTH PANEL MASONRY (TYPE B1 & B2)

SCALE: 3/4" = 1'-0"

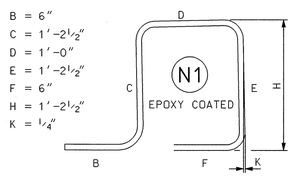

REINFORCING BEND

SCALE: 1 1/2" = 1'-0"

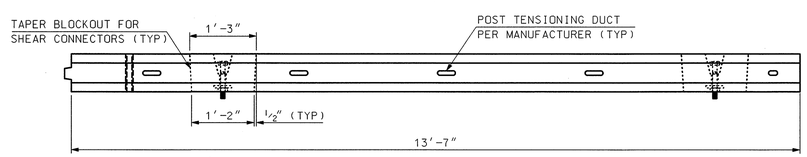

SECTION B-B FULL DEPTH PANEL MASONRY (TYPE A1 & A2)

SCALE: 3/4" = 1'-0"

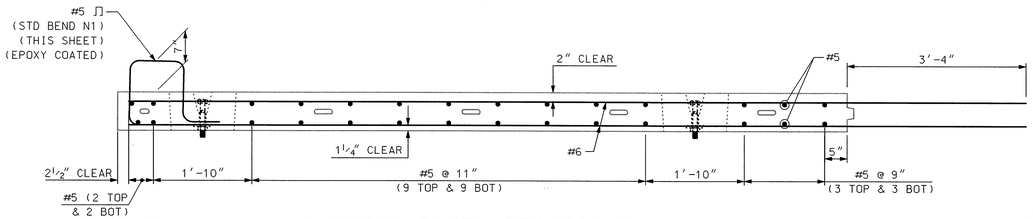

SECTION A-A FULL DEPTH PANEL REINFORCEMENT (TYPE B1 & B2)

SCALE: 3/4" = 1'-0"

SAMPLE PLAN
DATE: 9-2007

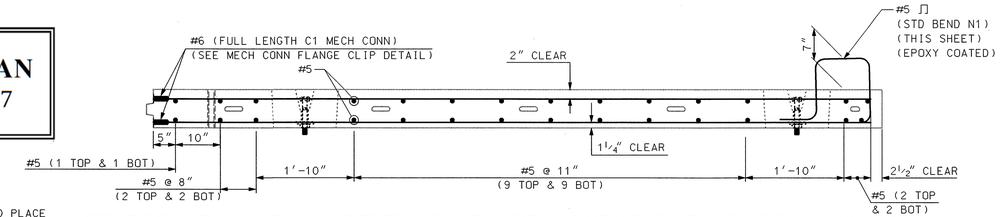

SECTION B-B FULL DEPTH PANEL REINFORCEMENT (TYPE A1 & A2)

SCALE: 3/4" = 1'-0"

FOR SECTION C-C AND SECTION D-D SEE BRIDGE SHEET 10

*** DECK PANEL A2 AND B2 (1 EACH) THE #5 BARS PROJECT OPPOSITE SIDE OF PANEL*

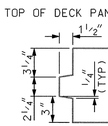

PANEL SHEAR KEY

N.T.S.

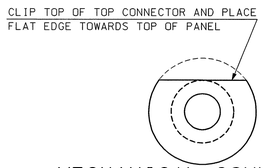

MECHANICAL CONNECTOR FLANGE CLIP DETAIL

N.T.S.

SUBDIRECTORY	.DGN LOCATOR	SHEET SCALE
BrD\Super\	143358FtPanel	AS NOTED

STATE OF NEW HAMPSHIRE
DEPARTMENT OF TRANSPORTATION * BUREAU OF BRIDGE DESIGN

TOWN HAVERHILL, N.H. - NEWBURY, VT BRIDGE NO. 099\149 STATE PROJECT 14335

LOCATION NEWBURY ROAD over CONNECTICUT RIVER

TYPE A1, A2, B1 & B2 DECK PANEL DETAILS

REVISIONS AFTER PROPOSAL		BY	DATE		BY	DATE
	DESIGNED	MGL	8/07	CHECKED	JWP	9/07
	DRAWN	GMC	8/07	CHECKED	MGL	9/07
	QUANTITIES	MGL	9/07	CHECKED	JAT	9/07
	ISSUE DATE		FEDERAL PROJECT NO.		SHEET NO.	
	REV. DATE		----------		16	

BRIDGE SHEET 12 OF 21
FILE NUMBER 108-1-1
TOTAL SHEETS 27

...\BRC\Super\143358FtPanel.dgn 9/11/2007 12:29:12 PM nt8pjp

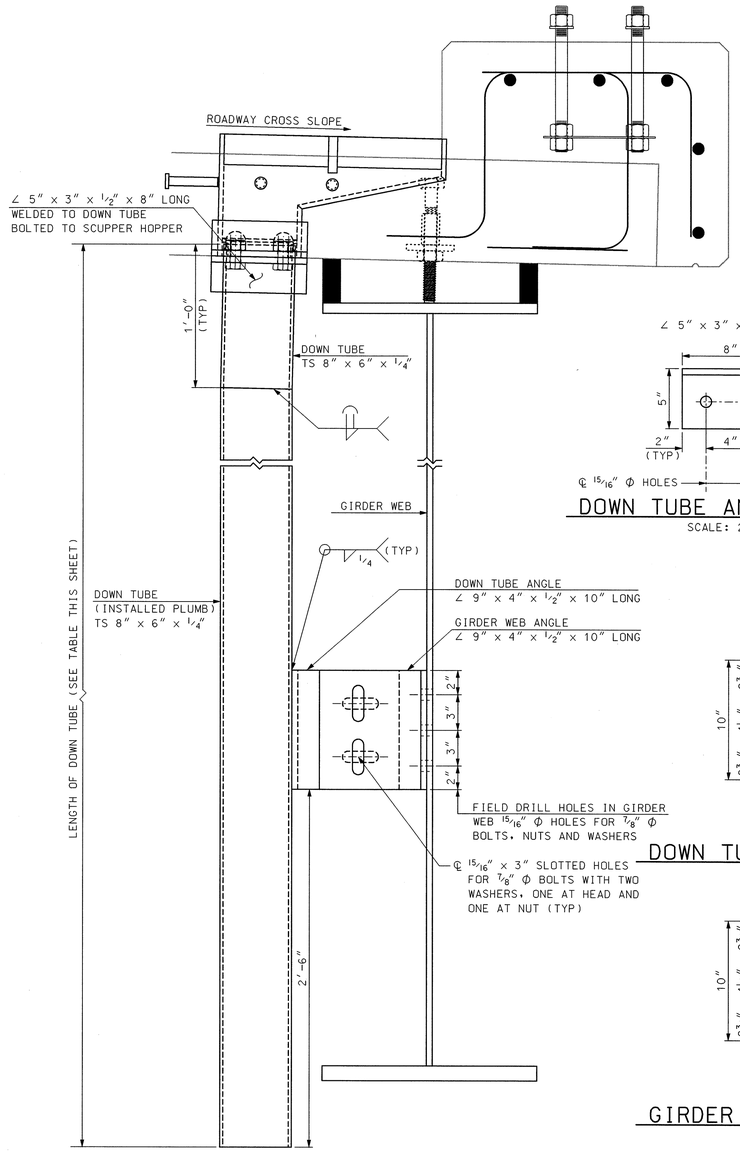

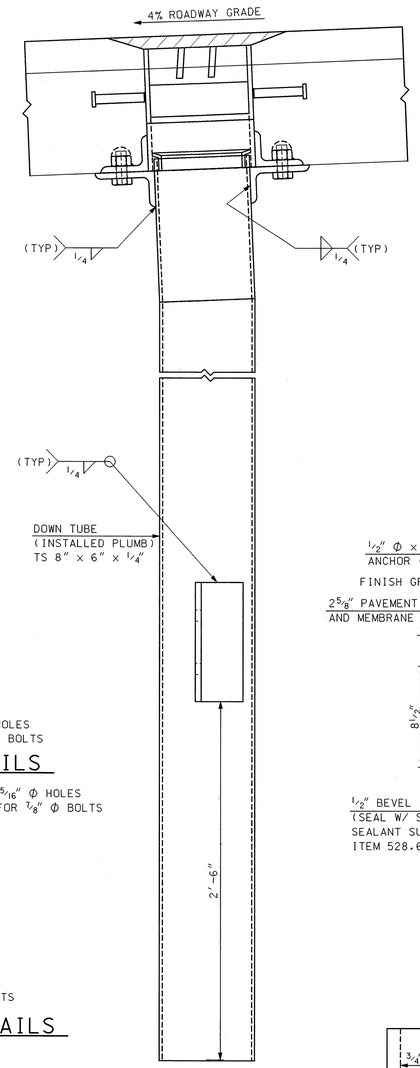

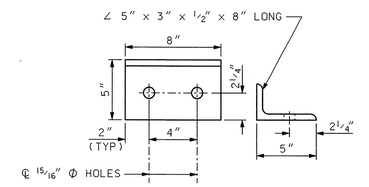

DOWN TUBE ANGLE DETAILS

SCALE: 2" = 1'-0"

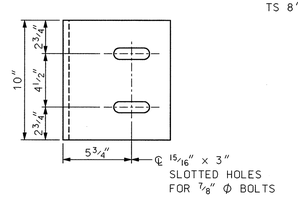

DOWN TUBE ANGLE DETAILS

SCALE: 2" = 1'-0"

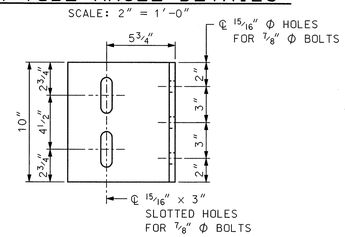

GIRDER WEB ANGLE DETAILS

SCALE: 2" = 1'-0"

DOWN TUBE DETAILS

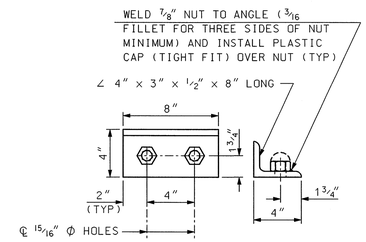

SCUPPER ANGLE DETAILS

SCALE: 2" = 1'-0"

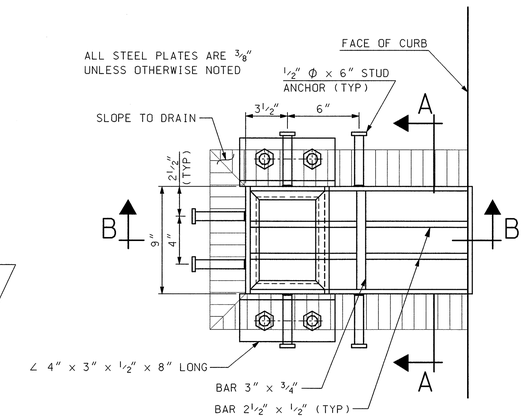

SCUPPER HOPPER DETAIL

SCALE: 2" = 1'-0"

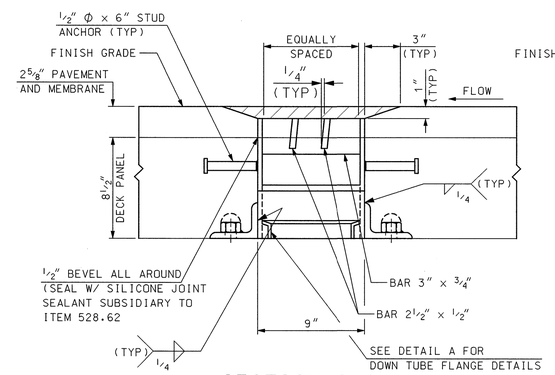

SECTION A-A

SCALE: 2" = 1'-0"

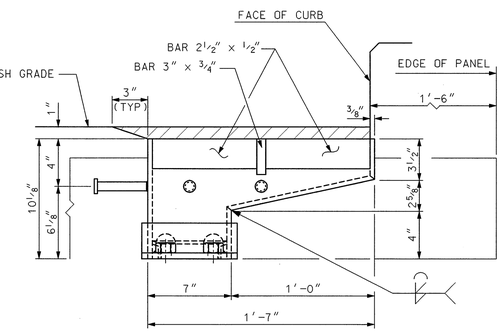

SECTION B-B

SCALE: 2" = 1'-0"

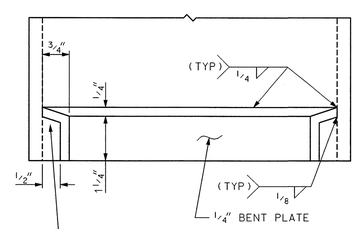

DETAIL A

SCALE: 6" = 1'-0"

SCUPPER LOCATIONS

APPROXIMATE STATION	OFFSET	DOWN TUBE LENGTH
114+22	LT	7'-3"
114+22	RT	7'-3"
115+18	LT	9'-2"
115+18	RT	9'-2"
116+14	LT	7'-3"
116+14	RT	7'-3"
117+18	RT	9'-2"
117+18	LT	9'-2"

SAMPLE PLAN
DATE: 9-2007

SCUPPER NOTES

1. ALL SCUPPERS TO BE FABRICATED FROM 3/8" PLATES, UNLESS OTHERWISE NOTED, AND SHALL CONFORM TO THE REQUIREMENTS OF AASHTO M270 GRADE 36 (ASTM A709 GRADE 36) OR ASTM A500, GRADE B.
2. ALL WELDS TO BE 1/4" CONTINUOUS FILLET, UNLESS OTHERWISE NOTED.
3. SCUPPERS AND CONNECTION PLATES ARE TO BE GALVANIZED AFTER FABRICATION ACCORDANCE WITH AASHTO M-111.
4. ALL BOLTED FIELD CONNECTIONS SHALL CONFORM TO THE REQUIREMENTS OF AASHTO M164 (ASTM A325) TYPE 1 GALVANIZED.
5. FOR LOCATION OF SCUPPERS, SEE LOCATION CHART THIS SHEET.
6. SCUPPER DOWNTUBES, SUPPORTS AND CONNECTIONS WILL BE PAID UNDER STRUCTURAL STEEL, ITEM 550.1 .
7. SCUPPER HOPPERS WILL BE PAID SUBSIDIARY TO ITEM 528.62, PRECAST CONCRETE BRIDGE DECK.
8. COAT THE AREA IN CONTACT WITH CONCRETE WITH AN APPROVED BONDING AGENT JUST PRIOR TO PLACING DECK CONCRETE (COST INCLUDED IN ITEM 528.62.
9. SCUPPER DOWNTUBES AND HOPPERS SHALL BE FABRICATED AT THE SAME SHOP AND TRIAL FIT AFTER GALVANIZING TO ASSURE PROPER FIT.

NOTE: DETAILS AND NOTES MAY NOT BE CURRENT. CLOSELY REVIEW BEFORE USING DETAILS.

SUBDIRECTORY	.DGN LOCATOR	SHEET SCALE
BrD\Super\	143358Scuppers	AS NOTED

STATE OF NEW HAMPSHIRE
DEPARTMENT OF TRANSPORTATION * BUREAU OF BRIDGE DESIGN

TOWN HAVERHILL, N.H. - NEWBURY, VT BRIDGE NO. 099\149 STATE PROJECT 14335

LOCATION NEWBURY ROAD over CONNECTICUT RIVER

SCUPPER AND DOWN TUBE DETAILS

REVISIONS AFTER PROPOSAL

	BY	DATE		BY	DATE
DESIGNED	MGL	9/07	CHECKED	JWP	9/07
DRAWN	GMC	9/07	CHECKED	MGL	9/07
QUANTITIES	MGL	9/07	CHECKED	JAT	9/07

ISSUE DATE
REV. DATE
FEDERAL PROJECT NO. ----------
SHEET NO. 17
BRIDGE SHEET 13 OF 21
FILE NUMBER 108-1-1
TOTAL SHEETS 27

...\brc\Super\143358Scuppers.dgn 9/11/2007 12:29:13 PM n18pjp

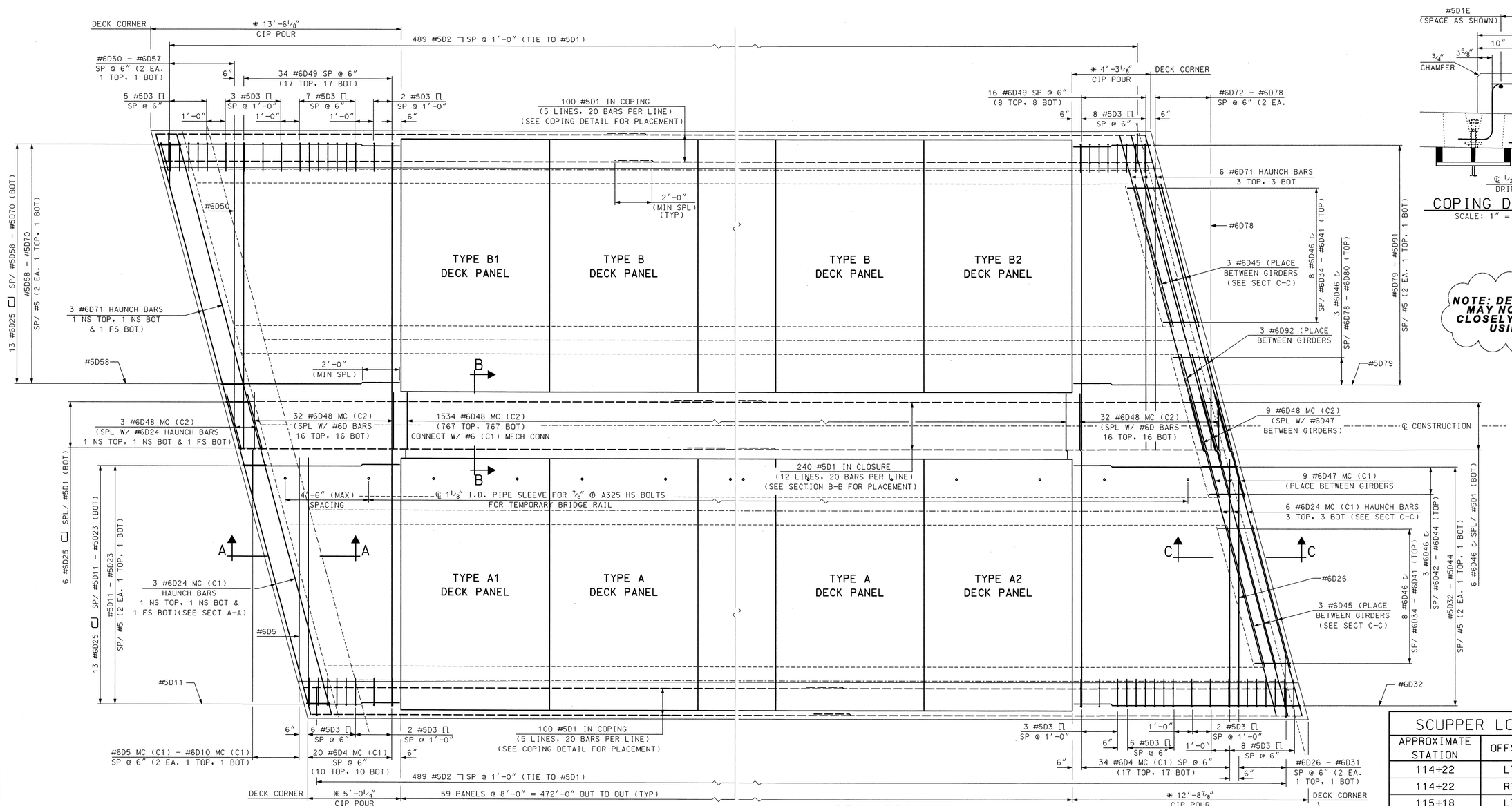

* ACTUAL LENGTHS MAY VARY DUE TO MINOR VARIATIONS IN DECK PANELS WIDTHS

DECK REINFORCING

SCALE: 3/8" = 1'-0"

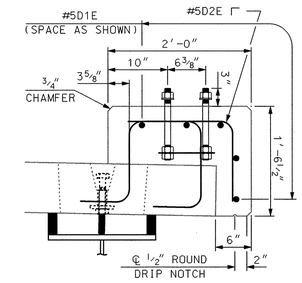

COPING DETAIL

SCALE: 1" = 1'-0"

NOTE: DETAILS AND NOTES MAY NOT BE CURRENT. CLOSELY REVIEW BEFORE USING DETAILS.

SCUPPER LOCATIONS		
APPROXIMATE STATION	OFFSET	DOWN TUBE LENGTH
114+22	LT	7'-3"
114+22	RT	7'-3"
115+18	LT	9'-2"
115+18	RT	9'-2"
116+14	LT	7'-3"
116+14	RT	7'-3"
117+18	RT	9'-2"
117+18	LT	9'-2"

SAMPLE PLAN
DATE: 9-2007

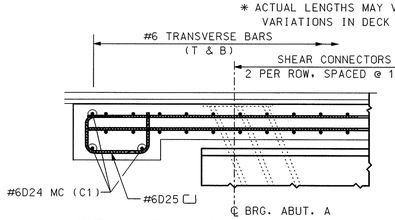

DECK END CLOSURE POUR SECTION A-A

SCALE: 3/4" = 1'-0"

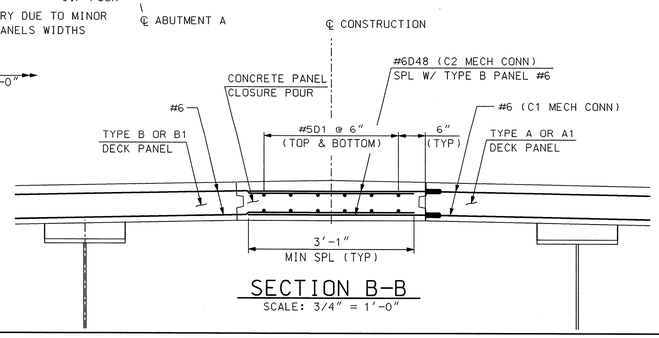

SECTION B-B

SCALE: 3/4" = 1'-0"

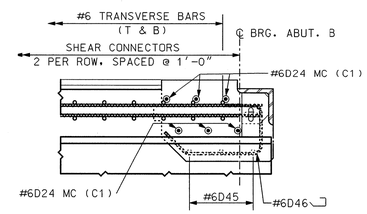

DECK END CLOSURE POUR SECTION C-C

SCALE: 3/4" = 1'-0"

SUBDIRECTORY	.DGN LOCATOR	SHEET SCALE
BRC/SUPER	14335Panelayo	AS NOTED

STATE OF NEW HAMPSHIRE
DEPARTMENT OF TRANSPORTATION * BUREAU OF BRIDGE DESIGN

TOWN HAVERHILL, N.H. - NEWBURY, VT BRIDGE NO. 099\149 STATE PROJECT 14335

LOCATION NEWBURY ROAD over CONNECTICUT RIVER

PANEL LAYOUT AND DECK END REINFORCEMENT

REVISIONS AFTER PROPOSAL		BY	DATE		BY	DATE
	DESIGNED	MGL	8/07	CHECKED	JWP	8/07
	DRAWN	GMC	8/07	CHECKED	MGL	8/07
	QUANTITIES	GMC	8/07	CHECKED	MGL	8/07
	ISSUE DATE			FEDERAL PROJECT NO.		
	REV. DATE			----------		

BRIDGE SHEET	FILE NUMBER	SHEET NO.	TOTAL SHEETS
14 OF 21	108-1-1	18	27

...\BRC\Super\14335Panelayo.dgn 9/11/2007 12:29:15 PM n18pjp

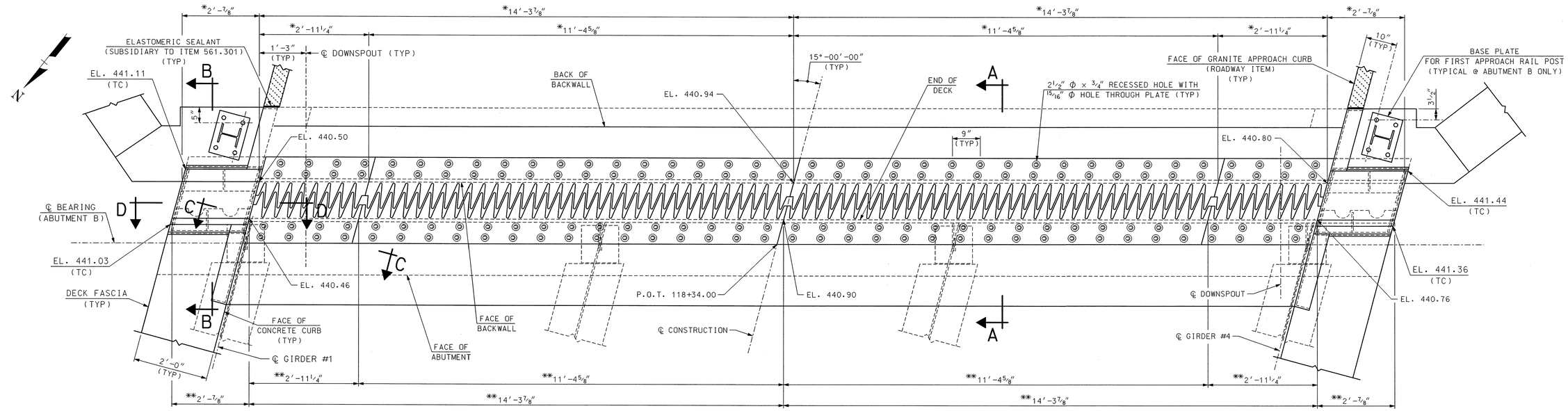

PLAN

SCALE: 3/4" = 1'-0"

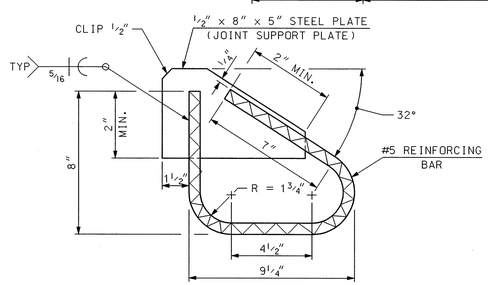

ANCHOR DETAIL

SCALE: 3" = 1'-0"

PLAN NOTES:

(1) SEE BRIDGE SHEET 17 FOR SECTIONS B-B, C-C & D-D
(2) ELEVATIONS SHOWN AT TOP OF FINGER PLATES UNLESS OTHERWISE NOTED (TC) DENOTES ELEVATIONS AT TOP OF CURB
(3) * = HORIZONTAL DIMENSIONS MEASURED ALONG FACE OF BACKWALL
(4) ** = HORIZONTAL DIMENSIONS MEASURED ALONG END OF DECK

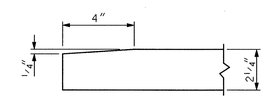

DETAIL A

SCALE: 3" = 1'-0"

EXPANSION JOINT NOTES

(1) EXPANSION JOINT STEEL SHALL BE AASHTO M 270M GRADE 50W (ASTM A 709, GRADE 50W) GALVANIZED. THE ENTIRE ASSEMBLY SHALL BE PAID FOR AS ITEM 561.301, PREFABRICATED EXPANSION JOINT, FINGER JOINT (F).

(2) SPLICES FOR EXPANSION JOINT STEEL SHALL DEVELOP FULL STRENGTH.

(3) THE EXPANSION JOINT SHALL BE PRESET TO THE TEMPERATURE ANTICIPATED AT TIME OF INSTALLATION. FINAL SETTING IN THE FIELD SHALL BE DETERMINED BY THE ENGINEER (SEE TEMPERATURE ADJUSTMENT TABLE). THE MAXIMUM ALLOWABLE MOVEMENT SHALL BE 3 7/8".

(4) PROTECT TOP OF EXPANSION JOINT DURING PLACEMENT OF CONCRETE AND BITUMINOUS PAVEMENT.

(5) JOINT SUPPORT PLATES SHALL BE SHOP WELDED TO THE EXPANSION JOINT STEEL AND SHALL BE VERTICAL AFTER THE JOINT ASSEMBLY HAS BEEN ADJUSTED FOR ROADWAY CROSS-SLOPE AND GRADE.

(6) FASCIA AND CURB PLATES SHALL BE SHOP WELDED AND SHALL BE VERTICAL AFTER THE JOINT ASSEMBLY HAS BEEN ADJUSTED FOR ROADWAY CROSS-SLOPE AND PROFILE GRADE.

(7) IMMEDIATELY AFTER THE JOINT HAS BEEN SECURED TO THE STRUCTURAL STEEL AND BACKWALL, REMOVE SHIPPING DEVICES. WELDING OF SHIPPING DEVICES TO FINGER PLATE SHALL NOT BE ALLOWED.

(8) FINGER PLATES SHALL BE CUT FROM A CONTINUOUS 2'-1" WIDE x 2 1/4" THICK PLATE AS SHOWN ON THE FINGER CUTTING DETAIL, AND FURNISHED IN 4 SECTIONS EACH SIDE OF JOINT. SEE FINGER PLATE PLAN AND CUTTING DETAIL ON BRIDGE SHEET 17.

(9) HOPPERS AND DOWNSPOUTS SHALL MEET THE REQUIREMENTS OF ASTM A 500, GRADE B, GALVANIZED IN ACCORDANCE WITH SECTION 550.2.9. PAYMENT FOR HOPPERS, DOWNSPOUTS, BLOCKING PADS AND ALL ATTACHMENTS WILL BE INCLUDED UNDER ITEM 561.301.

(10) ELEVATIONS SHOWN AT TOP OF FINGER PLATES ARE 1/8" LOWER THAN THE PROPOSED FINISHED ROADWAY GRADE.

(11) SEE BRIDGE SHEET 17 FOR DRAINAGE AND HOPPER DETAILS.

(12) FABRIC TROUGH SHALL BE PREFORMED FABRIC MATERIAL AND SHALL BE CUT DURING SHOP PRE-ASSEMBLY AND SHALL BE SUPPLIED IN 4 LENGTHS WITH 6" OVERLAP NEAR PHASE CONSTRUCTION JOINT.

(13) RUBBER BLOCKS SHALL BE MOLDED TO A THICKNESS OF 1/2", AND CUT BY THE FABRICATOR TO LENGTHS AND WIDTHS SPECIFIED ON THE PLANS. RUBBER BLOCKS SHALL BE OZONE, WATER AND TEMPERATURE RESISTANT AND BONDED TO THE FACE OF ABUTMENT CONCRETE WITH A COMPATIBLE ADHESIVE IN ACCORDANCE WITH THE MANUFACTURER'S RECOMMENDATIONS.

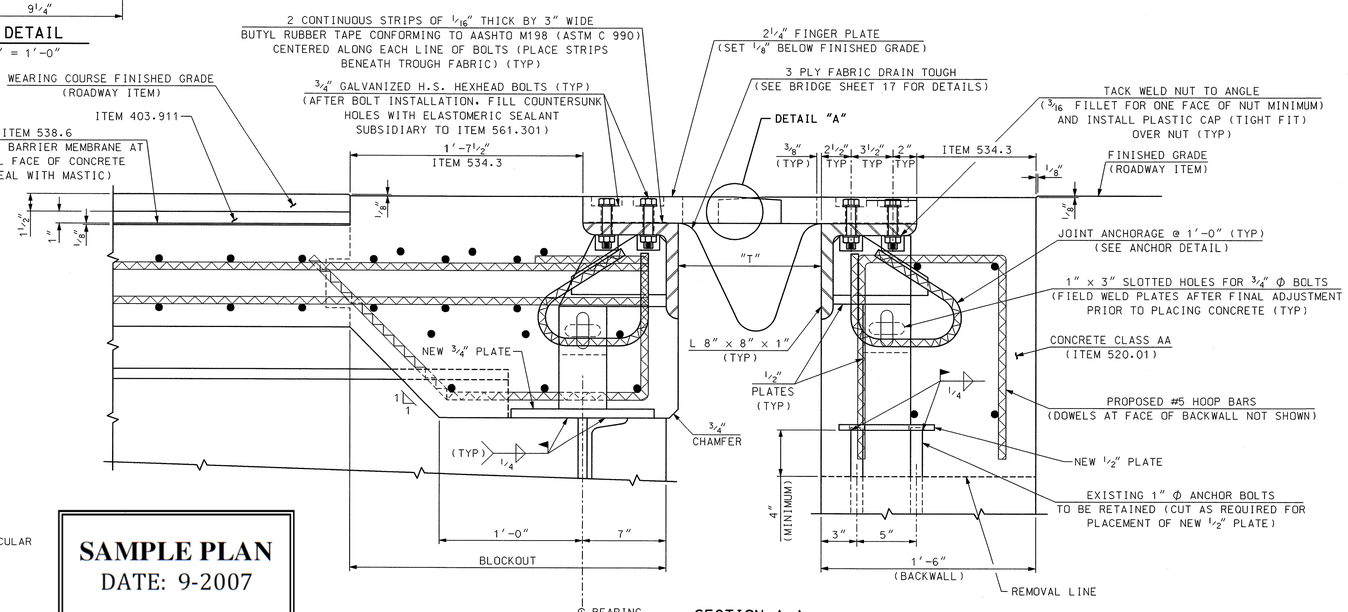

SECTION A-A

SCALE: 2" = 1'-0"

NOTE: DETAILS AND NOTES MAY NOT BE CURRENT. CLOSELY REVIEW BEFORE USING DETAILS.

TEMPERATURE ADJUSTMENT TABLE	
TEMPERATURE	"T"
15°F	13 1/8"
30°F	12 5/8"
45°F	12"
60°F	11 1/2"
75°F	11"
90°F	10 3/8"

"T" DIMENSIONS ARE PERPENDICULAR TO FACE OF BACKWALL

SAMPLE PLAN
DATE: 9-2007

SUBDIRECTORY	.DGN LOCATOR	SHEET SCALE
BRC/ExpJoint	FINGER-JT	AS NOTED

STATE OF NEW HAMPSHIRE
DEPARTMENT OF TRANSPORTATION * BUREAU OF BRIDGE DESIGN

TOWN HAVERHILL, N.H. - NEWBURY, VT BRIDGE NO. 099\149 STATE PROJECT 14335
LOCATION NEWBURY ROAD over CONNECTICUT RIVER

FINGER JOINT LAYOUT

REVISIONS AFTER PROPOSAL		BY	DATE		BY	DATE
	DESIGNED	MGL	8/07	CHECKED	JWP	9/07
	DRAWN	PJP	8/07	CHECKED	JWP	9/07
	QUANTITIES	MGL	9/07	CHECKED	JAT	9/07
	ISSUE DATE		FEDERAL PROJECT NO.		SHEET NO.	
	REV. DATE		----------		19	

BRIDGE SHEET 15 OF 21
FILE NUMBER 108-1-1
TOTAL SHEETS 27

...\BRC\ExpJoint\FINGER-JT.dgn 9/11/2007 12:29:16 PM n18pjp

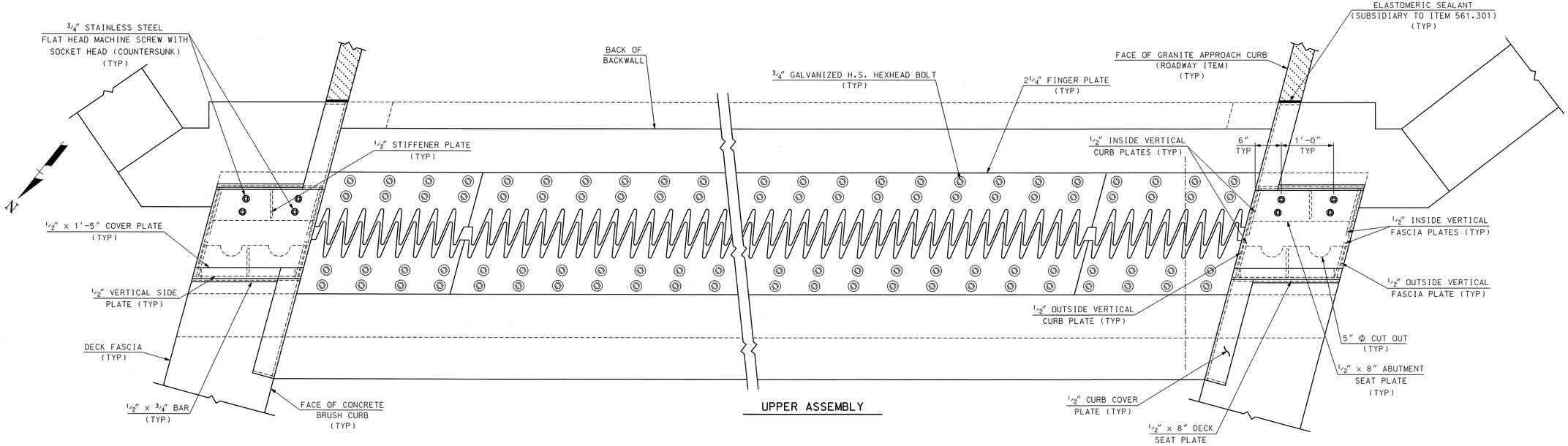

UPPER ASSEMBLY

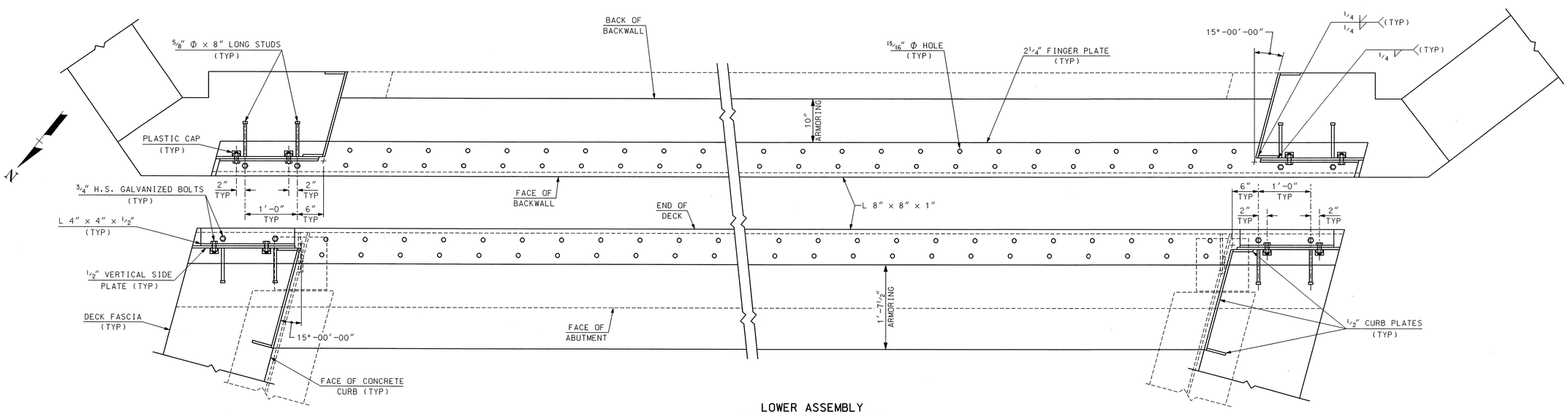

LOWER ASSEMBLY

NOTE: DETAILS AND NOTES MAY NOT BE CURRENT. CLOSELY REVIEW BEFORE USING DETAILS.

SAMPLE PLAN
DATE: 9-2007

SUBDIRECTORY	.DGN LOCATOR	SHEET SCALE
BRC/ExpJoint	JT-ASSEMBLY	1" = 1'-0"

STATE OF NEW HAMPSHIRE
DEPARTMENT OF TRANSPORTATION * BUREAU OF BRIDGE DESIGN

TOWN HAVERHILL, N.H. - NEWBURY, VT BRIDGE NO. 099\149 STATE PROJECT 14335
LOCATION NEWBURY ROAD over CONNECTICUT RIVER

FINGER JOINT ASSEMBLY

BRIDGE SHEET 16 OF 21

REVISIONS AFTER PROPOSAL		BY	DATE		BY	DATE
	DESIGNED	MGL	8/07	CHECKED	JWP	9/07
	DRAWN	PJP	8/07	CHECKED	JWP	9/07
	QUANTITIES	MGL	9/07	CHECKED	JAT	9/07
	ISSUE DATE		FEDERAL PROJECT NO.		SHEET NO.	TOTAL SHEETS
	REV. DATE		----------		20	27

FILE NUMBER 108-1-1

...\BRC\ExpJoint\JT-ASSEMBLY.dgn 9/11/2007 12:29:17 PM n18pjp

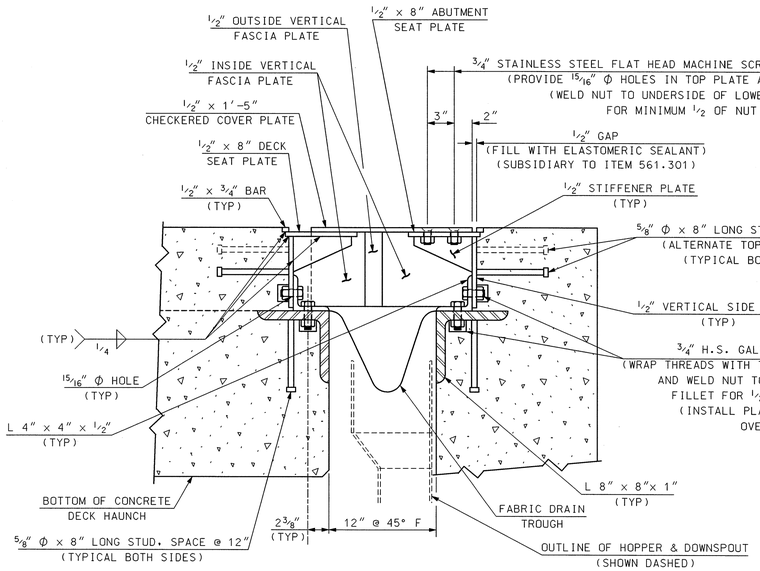

SECTION B-B
SCALE: 1 1/2" = 1'-0"

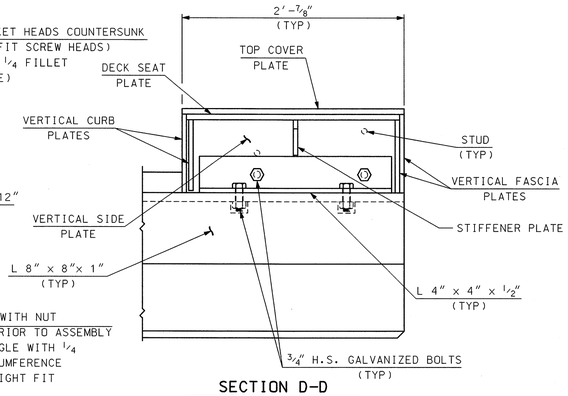

SECTION D-D
SCALE: 1 1/2" = 1'-0"

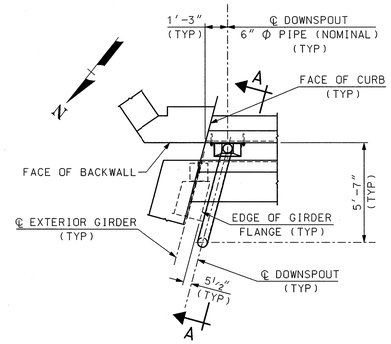

PLAN VIEW (HOPPER LOCATION)
SCALE: 1/4" = 1'-0"

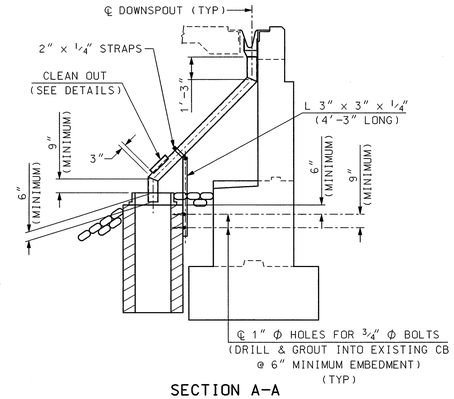

SECTION A-A
SCALE: 1/4" = 1'-0"

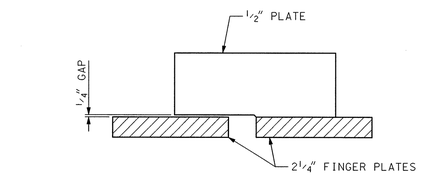

OUTSIDE VERTICAL CURB PLATE
SCALE: 1 1/2" = 1'-0"

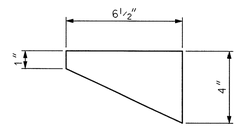

STIFFENER PLATE
SCALE: 3" = 1'-0"

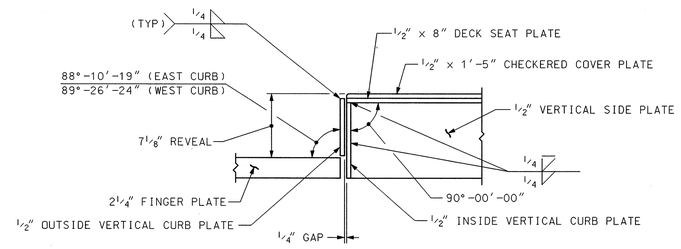

SECTION C-C
SCALE: 1 1/2" = 1'-0"

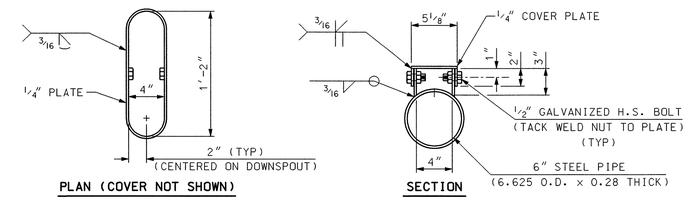

CLEANOUT DETAILS
SCALE: 1 1/2" = 1'-0"

FINGER PLATE PLAN
SCALE: 1/4" = 1'-0"

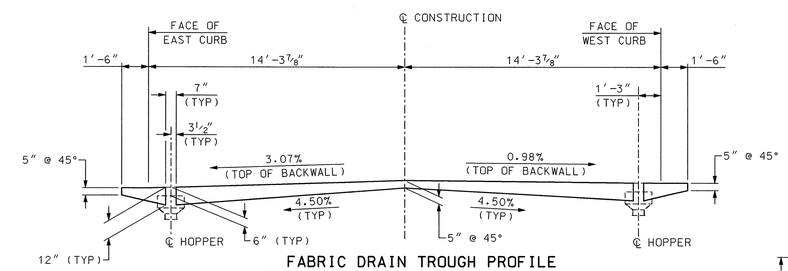

FABRIC DRAIN TROUGH PROFILE
SCALE: 1/4" = 1'-0"

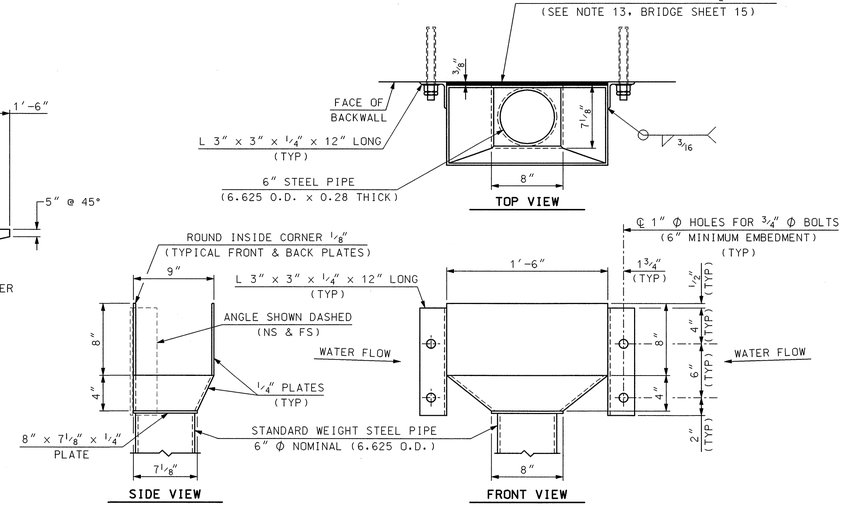

HOPPER DETAILS
SCALE: 1 1/2" = 1'-0"

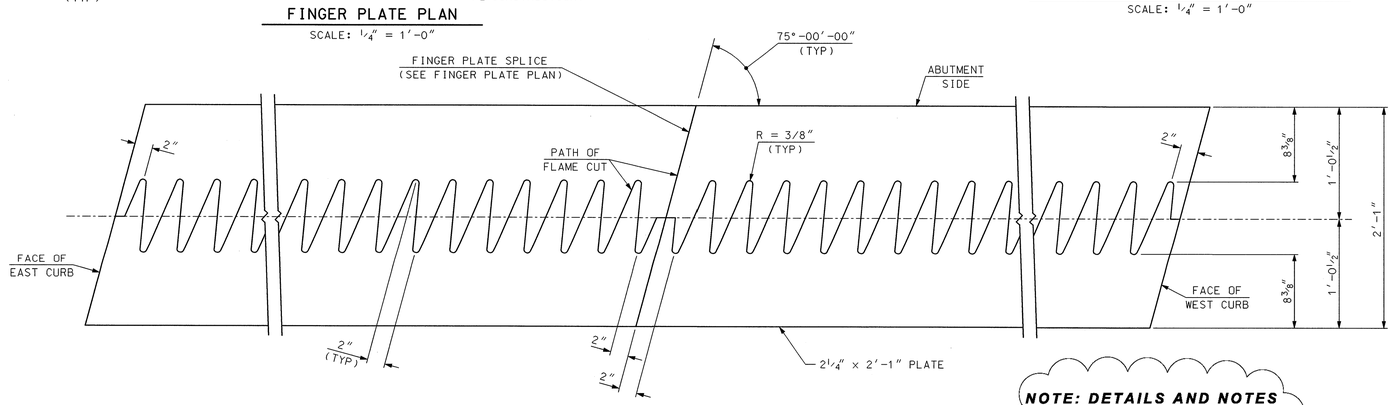

FINGER CUTTING DETAIL
SCALE: 1 1/2" = 1'-0"

NOTE: DETAILS AND NOTES MAY NOT BE CURRENT. CLOSELY REVIEW BEFORE USING DETAILS.

SAMPLE PLAN
DATE: 9-2007

SUBDIRECTORY	.DGN LOCATOR	SHEET SCALE
BRC/ExpJoint	JT-DETAILS	AS NOTED

STATE OF NEW HAMPSHIRE
DEPARTMENT OF TRANSPORTATION * BUREAU OF BRIDGE DESIGN

TOWN HAVERHILL, N.H. - NEWBURY, VT BRIDGE NO. 099\149 STATE PROJECT 14335
LOCATION NEWBURY ROAD over CONNECTICUT RIVER

FINGER JOINT DETAILS

REVISIONS AFTER PROPOSAL	BY	DATE		BY	DATE
DESIGNED	MGL	8/07	CHECKED	JWP	9/07
DRAWN	PJP	8/07	CHECKED	JWP	9/07
QUANTITIES	MGL	9/07	CHECKED	JAT	9/07

ISSUE DATE	FEDERAL PROJECT NO.	SHEET NO.
REV. DATE	----------	21

BRIDGE SHEET 17 OF 21
FILE NUMBER 108-1-1
TOTAL SHEETS 27

...\BRC\ExpJoint\JT-DETAILS.dgn 9/11/2007 12:29:19 PM n18pjp

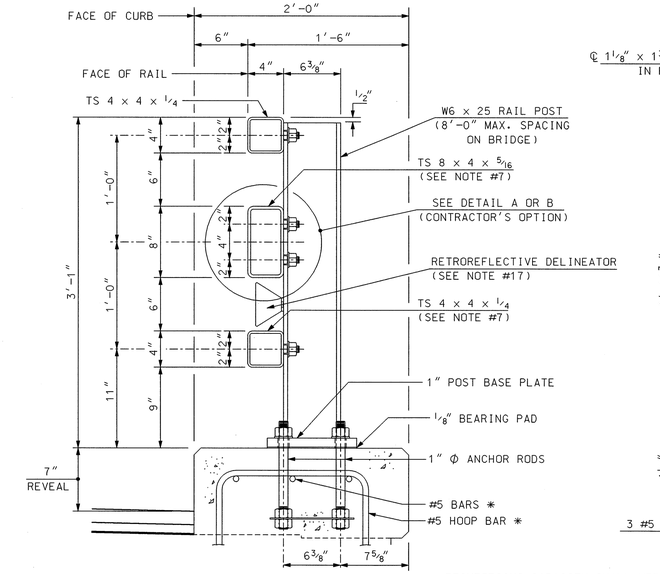

SECTION VIEW

* REINFORCING CAPACITY SHALL MEET OR EXCEED THAT SHOWN

POST ASSEMBLY

SCALE: 1 1/2" = 1'-0"

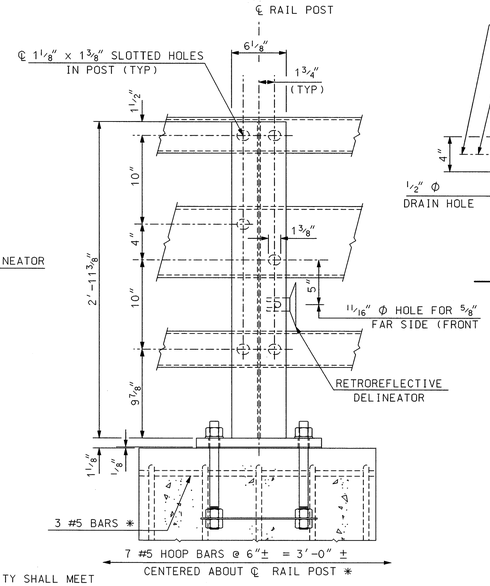

BACK ELEVATION VIEW

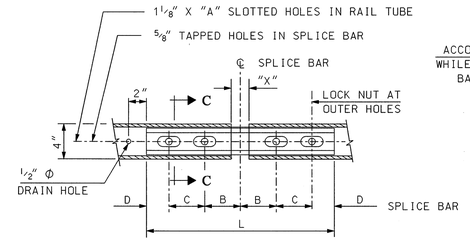

RAIL SPLICE (BOTTOM VIEW)

SCALE: 1 1/2" = 1'-0"

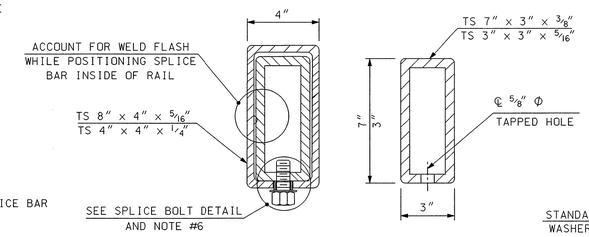

SECTION C-C

SPLICE BAR SECTION

RAIL SPLICE DETAILS

SCALE: 3" = 1'-0"

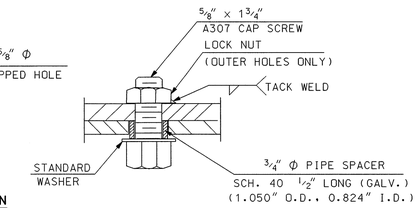

SPLICE BOLT DETAIL

SCALE: 6" = 1'-0"

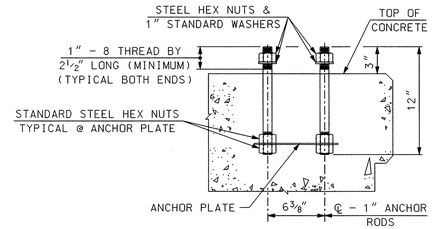

POST ANCHOR ASSEMBLY

SCALE: 1 1/2" = 1'-0"

RAIL NOTES

(1) ITEM 563.23, BRIDGE RAIL T3 (F), SHALL INCLUDE POSTS, BASE PLATES, ANCHOR PLATES, ANCHOR RODS, PREFORMED PADS, RAIL ASSEMBLY BOLTS, NUTS, WASHERS, STUDS, STRUCTURAL TUBING, SPLICE BARS, PIPE SPACERS, ALL APPURTENANCES, AND GALVANIZING.

(2) BRIDGE RAIL POSTS SHALL BE SET NORMAL (90 DEGREES) TO THE PROFILE GRADE, EXCEPT ON GRADES OVER 5% WHERE POSTS SHALL BE SET VERTICAL.

(3) ENDS OF RAIL TUBE SECTIONS SHALL BE SAWED OR MILLED AND SHALL BE TRUE AND SMOOTH. ALL CUT EDGES OF ALL MATERIAL SHALL BE GROUND SMOOTH.

(4) EACH PIECE OF RAIL TUBING SHALL BE ATTACHED TO A MINIMUM OF THREE (3) POSTS.

(5) BOLT HOLES SHALL BE DRILLED OR PUNCHED. FLAME CUTTING MAY BE USED TO FINISH SLOTTED HOLES IF MECHANICALLY GUIDED.

(6) AT INTERIOR SPLICES, PIPE SPACERS SHALL BE USED ON ONLY ONE SIDE OF THE SPLICE TO ALLOW MOVEMENT ON THAT SIDE. ALL RAILS IN A SPLICE SHALL RECEIVE THE SAME TREATMENT. AT END SPLICES PIPE SPACERS SHALL BE USED ON BOTH SIDES OF THE SPLICE TO ALLOW MOVEMENT ON EACH SIDE.

(7) MILL OR SHOP TRANSVERSE WELDS SHALL NOT BE PERMITTED ON ANY RAIL ELEMENT. RAIL ELEMENTS USED ON CURVES SHALL USE 3/8" WALL TUBES AND SHALL BE SHOP FORMED TO THE REQUIRED CURVATURE.

(8) NO PUNCHING, DRILLING, CUTTING OR WELDING SHALL BE PERMITTED AFTER GALVANIZING, EXCEPT AS ALLOWED IN DETAILS A AND B. DAMAGED AREAS OF GALVANIZING SHALL BE THOROUGHLY CLEANED, PRETREATED, AND PAINTED WITH TWO COATS OF ORGANIC ZINC-RICH GALVANIZING REPAIR PAINT, HAVING MIN. 94% ZINC BY WEIGHT. TO A THICKNESS EQUAL TO THE ORIGINAL COATING ACCORDING TO THE STANDARD SPECIFICATIONS AND ASTM A780.

(9) NUTS FOR 1" Φ THREADED ANCHOR RODS CONNECTING THE BASE PLATE TO THE CONCRETE SHALL BE TIGHTENED TO A SNUG FIT AND GIVEN AN ADDITIONAL 1/8 TURN.

(10) THREADS FOR ANCHOR RODS MAY BE ROLLED OR CUT. IF CUT THREADS ARE USED, BOLT DIAMETER SHALL NOT BE LESS THAN NOMINAL DIAMETER. IF ROLLED THREADS ARE USED, ROD DIAMETER SHALL NOT BE LESS THAN ROOT DIAMETER OF THREADS.

MATERIAL NOTES

(11) STRUCTURAL TUBING SHALL CONFORM TO THE REQUIREMENTS OF ASTM A500, GRADE B, STRUCTURAL STEEL TUBING. RAIL TUBING SHALL MEET THE LONGITUDINAL CHARPY V-NOTCH REQUIREMENTS OF 15 FT. LBS. AT 0° F. FOR ASTM A500, GRADE B. THE TEST SAMPLES SHALL BE TAKEN AFTER FORMING THE TUBES. CHARPY V-NOTCH IS NOT REQUIRED FOR SPLICE TUBES.

(12) RAIL POSTS AND BASE PLATES SHALL CONFORM TO THE REQUIREMENTS OF ASTM A572 GR 50, EXCEPT ANCHOR PLATES MAY BE ASTM A36.

(13) THREADED STUDS AND MATCHING NUTS FOR RAIL-TO-POST ATTACHMENT (DETAIL A) SHALL CONFORM TO ASTM A276 TYPE 304, STAINLESS STEEL, AND SHALL BE TORQUE TESTED PER AWS D1.5, 7.7.1. DETAIL B BOLTS SHALL BE ASTM A325 OR A449. ALL OTHER BOLTS AND NUTS SHALL CONFORM TO ASTM A307 AND ASTM 563 GRADE A RESPECTIVELY OR BETTER, EXCEPT THAT ASTM A307 NUTS MAY BE USED ON THE BOTTOM OF ANCHOR ASSEMBLY. WASHERS SHALL BE HARDENED STEEL COMMERCIAL TYPE A PLAIN WIDE WASHERS AND SHALL MEET THE DIMENSIONAL REQUIREMENTS OF A.N.S.I. B18.22. ANCHOR RODS SHALL CONFORM TO ASTM A449.

(14) ALL STEEL COMPONENTS (EXCEPT STAINLESS) SHALL BE GALVANIZED AFTER FABRICATION IN CONFORMANCE TO AASHTO M232 (ASTM A153) AND AASHTO M111 (ASTM A123). THE GALVANIZING KETTLE SHALL HAVE 0.05 TO 0.09 PERCENT NICKEL. GALVANIZED SURFACES SHALL HAVE A UNIFORM APPEARANCE AND GALVANIZED MATERIAL SHALL BE PROPERLY STORED. IF PAINTING IS REQUIRED SEE SPECIAL PROVISIONS FOR 708.

(15) DETAIL A STUDS SHALL BE WELDED ON AFTER TUBES ARE GALVANIZED BY SPOT GRINDING OFF GALVANIZING, WELDING ON STUDS, THEN TOUCH UP GALVANING PER NOTE #8 ABOVE.

(16) PREFORMED BEARING PADS (1/8" THICK) SHALL CONFORM TO AASHTO M251.

(17) RETROREFLECTIVE DELINEATORS, BOLTS, NUTS, WASHERS AND FIELD DRILLING OF POSTS, INCLUDING GALVANIZING TOUCH-UP, SHALL BE SUBSIDIARY TO ITEM 563.23. SEE STANDARD PLANS FOR ROAD AND BRIDGE CONSTRUCTION (DL-1) FOR ADDITIONAL DETAILS AND SPACING.

(18) THIS BRIDGE RAIL SYSTEM WAS SUCCESSFULLY CRASH TESTED FOR AASHTO PL2 IN 1997 BY THE NEW ENGLAND TRANSPORTATION CONSORTIUM.

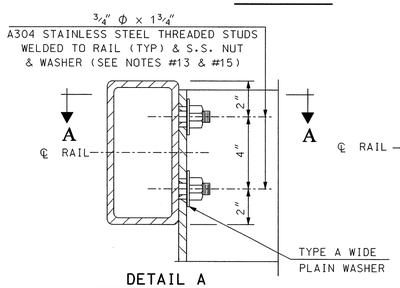

DETAIL A

SCALE: 3" = 1'-0"

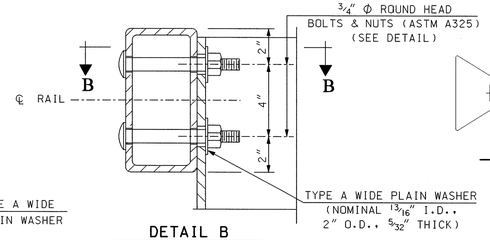

DETAIL B

SCALE: 3" = 1'-0"

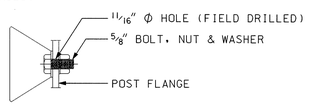

DELINEATOR MOUNTING

N.T.S.

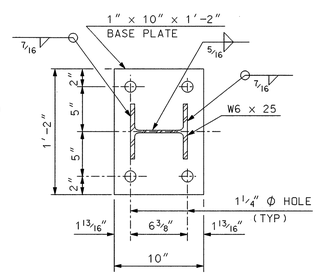

POST BASE PLATE

SCALE: 1 1/2" = 1'-0"

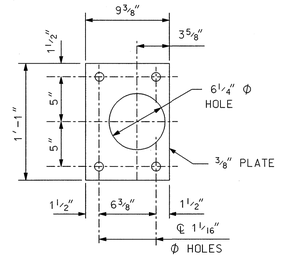

ANCHOR PLATE

SCALE: 1 1/2" = 1'-0"

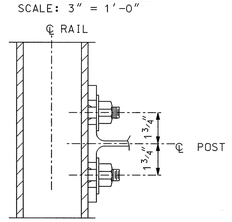

SECT

SCALE:

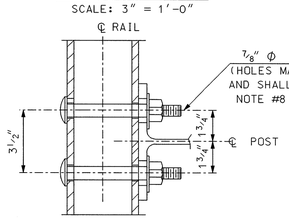

ECTION B-B

ALE: 3" = 1'-0"

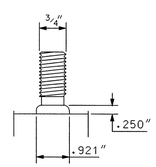

STUD WELD DETAIL

SCALE: 6" = 1'-0"

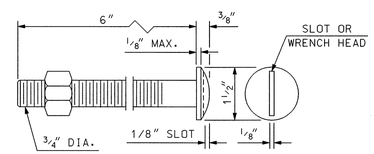

A325 ROUND HEAD BOLT DETAIL

SCALE: 6" = 1'-0"

NOTE: DETAILS AND NOTES MAY NOT BE CURRENT. CLOSELY REVIEW BEFORE USING DETAILS.

SPLICE BAR DIMENSION TABLE							
	T	A	B	C	D	X	L
	INTERIOR	2 1/2"	4"	4"	2"	3/4"	1'-8"
*	≤ 3 1/4"	2 1/2"	4"	4"	2"	2"	1'-8"
*	3 1/4" <T≤ 5 1/4"	3 1/2"	5"	5"	2 1/2"	3"	2'-1"

T = TOTAL MOVEMENT OF BRIDGE
* = END SPLICE BAR

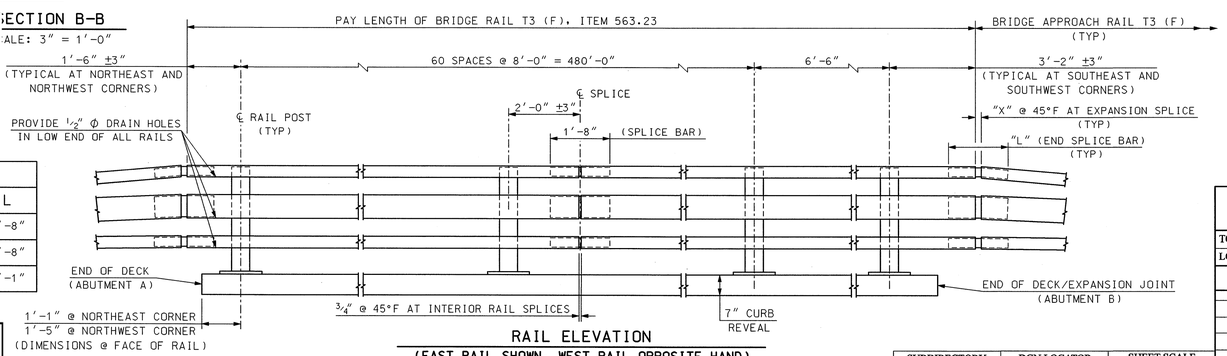

RAIL ELEVATION

(EAST RAIL SHOWN, WEST RAIL OPPOSITE HAND)

NOT TO SCALE

SUBDIRECTORY	.DGN LOCATOR	SHEET SCALE
BRC/MiscShts	T3BR-RAIL	AS NOTED

SAMPLE PLAN
DATE: 9-2007

STATE OF NEW HAMPSHIRE

DEPARTMENT OF TRANSPORTATION * BUREAU OF BRIDGE DESIGN

TOWN HAVERHILL, N.H. - NEWBURY, VT BRIDGE NO. 099\149 STATE PROJECT 14335

LOCATION NEWBURY ROAD over CONNECTICUT RIVER

T3 STEEL BRIDGE RAIL (PL2)

REVISIONS AFTER PROPOSAL	BY	DATE	BY	DATE
DESIGNED	NETC/JSZ	3/02	CHECKED	NHDOT
DRAWN	PJP	10/05	CHECKED	JSZ 10/05
QUANTITIES	MGL	9/07	CHECKED	JAT 9/07
ISSUE DATE	11/15/05	FEDERAL PROJECT NO.	SHEET NO.	
REV. DATE	8/30/06	----------	22	

BRIDGE SHEET 18 OF 21

FILE NUMBER 108-1-1

TOTAL SHEETS 27

...\BRC\MiscShts\T3BR-RAIL.dgn 9/11/2007 12:29:20 PM nibpjp

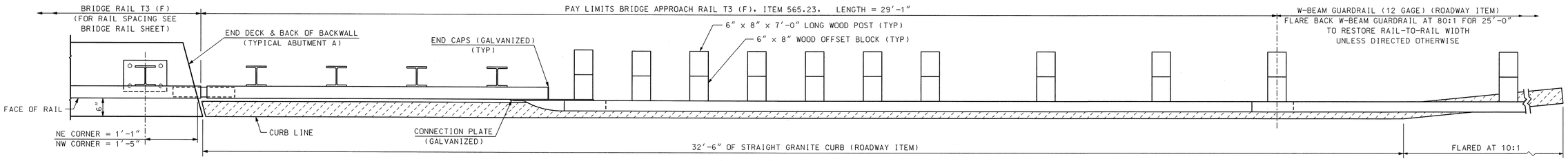

PLAN VIEW - APPROACH RAIL

SCALE: 3/4" = 1'-0"

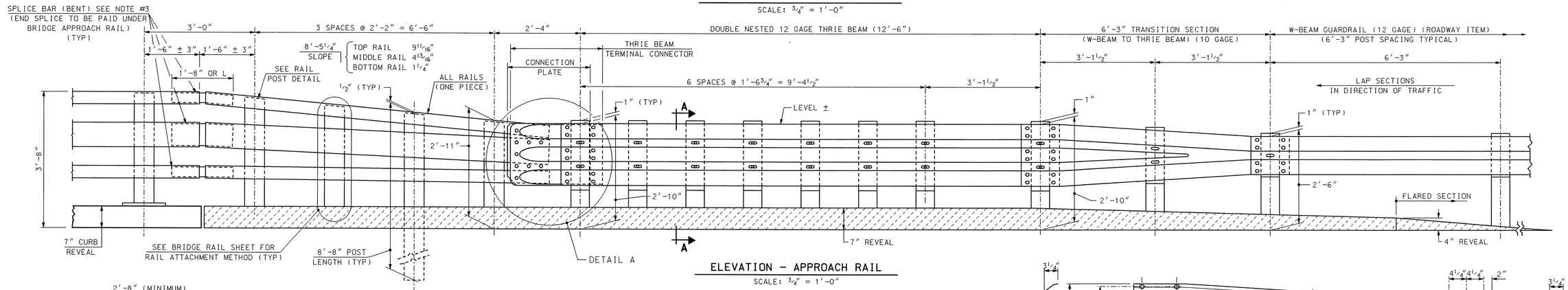

ELEVATION - APPROACH RAIL

SCALE: 3/4" = 1'-0"

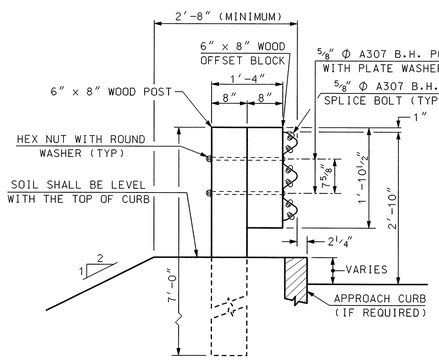

SECTION A-A (POST RAIL ASSEMBLY)

SCALE: 3/4" = 1'-0"

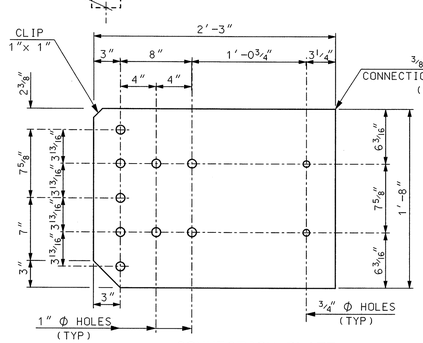

CONNECTION PLATE

SCALE: 1 1/2" = 1'-0"

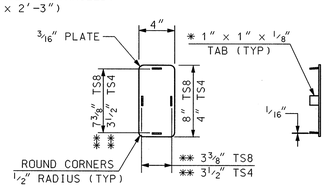

* WELD TABS TO END CAP PLATE IN TAPERED POSITION SO CAP CAN BE JAMMED INTO END OF RAIL TUBE

** SEE RAIL NOTES ON BRIDGE RAIL SHEET

END CAP DETAILS

SCALE: 1 1/2" = 1'-0"

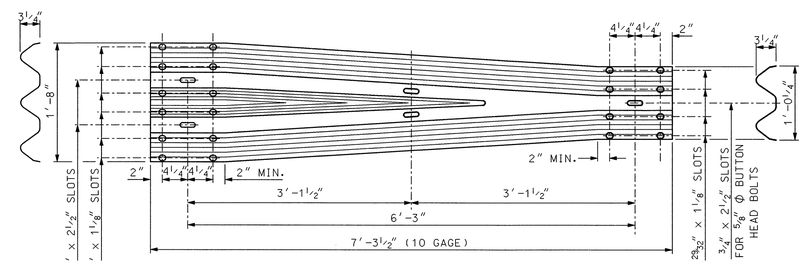

THRIE-BEAM TO W-BEAM TRANSITION SECTION

SCALE: 1" = 1'-0"

NOTE: DETAILS AND NOTES MAY NOT BE CURRENT. CLOSELY REVIEW BEFORE USING DETAILS.

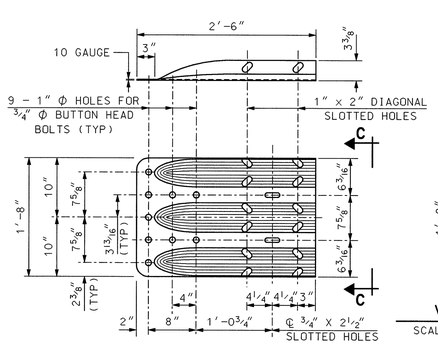

THRIE-BEAM TERMINAL CONNECTOR

SCALE: 1" = 1'-0"

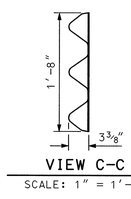

VIEW C-C

SCALE: 1" = 1'-0"

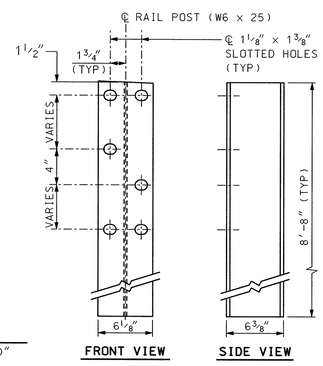

RAIL POST

SCALE: 1 1/2" = 1'-0"

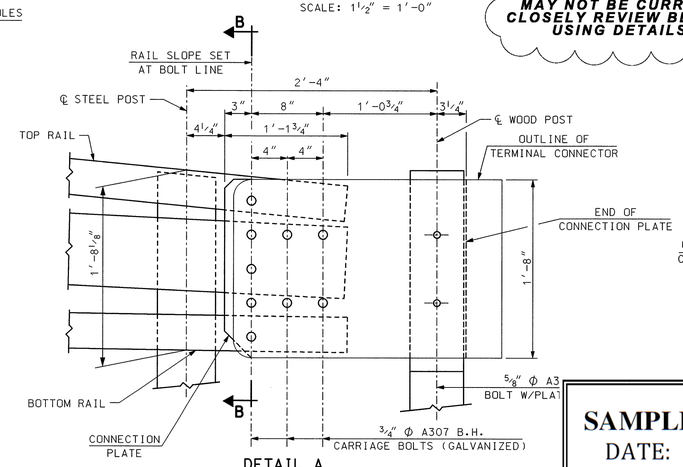

DETAIL A

OVERLAPPING OF DOUBLE NESTED THRIE-BEAM NOT SHOWN FOR CLARITY

SCALE: 1 1/2" = 1'-0"

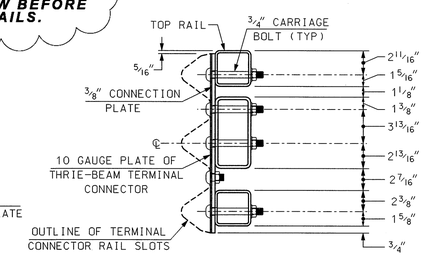

SECTION B-B (CONNECTION PLATE)

SCALE: 1 1/2" = 1'-0"

NOTES:

(1) ALL BRIDGE APPROACH RAIL MATERIALS, DIMENSIONS, SIZES, AND NOTES SHALL BE THE SAME AS THOSE OF THE BRIDGE RAIL, UNLESS OTHERWISE NOTED. SEE BRIDGE RAIL SHEET FOR NOTES AND ADDITIONAL INFORMATION.

(2) CARRIAGE BOLTS SHALL BE ASTM A307, AND NUTS SHALL BE ASTM A563 GRADE A OR BETTER (GALVANIZED).

(3) WELD SPLICE BAR TO FIT BEND. USE COMPLETE JOINT PENETRATION BUTT WELD (B-U2).

(4) THIS BRIDGE RAIL TRANSITION SYSTEM HAS BEEN ACCEPTED FOR NCHRP 350 FOR TL3 BASED ON CRASH TESTING APRIL 2005 BY THE NETC.

SAMPLE PLAN
DATE: 9-2007

SUBDIRECTORY	.DGN LOCATOR	SHEET SCALE
BRC/MiscShts	T3APP_RAIL-A	AS NOTED

STATE OF NEW HAMPSHIRE
DEPARTMENT OF TRANSPORTATION * BUREAU OF BRIDGE DESIGN

TOWN HAVERHILL, N.H. - NEWBURY, VT BRIDGE NO. 099\149 STATE PROJECT 14335

LOCATION NEWBURY ROAD over CONNECTICUT RIVER

T3 STEEL BRIDGE APPROACH RAIL (ABUTMENT A)

REVISIONS AFTER PROPOSAL

	BY	DATE		BY	DATE
DESIGNED	NETC/JSZ	3/02	CHECKED	NHDOT	
DRAWN	PJP	10/05	CHECKED	JSZ	10/05
QUANTITIES	MGL	9/07	CHECKED	JAT	9/07
ISSUE DATE	11/15/05	FEDERAL PROJECT NO.		SHEET NO.	TOTAL SHEETS
REV. DATE	8/30/06	----------		23	27

BRIDGE SHEET 19 OF 21

FILE NUMBER 108-1-1

...\BRC\MiscShts\T3APP_RAIL-A.dgn 9/11/2007 12:29:21 PM nibpjp

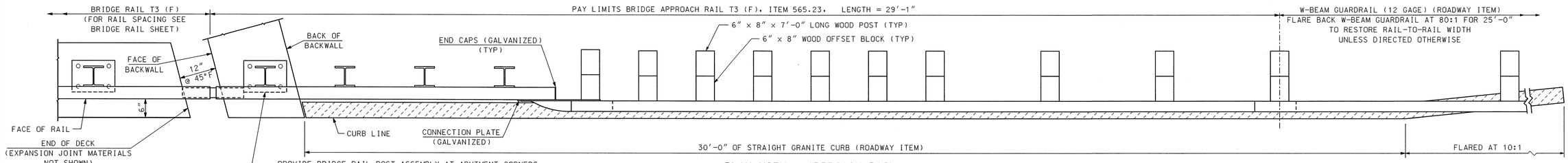

PLAN VIEW - APPROACH RAIL

SCALE: 3/4" = 1'-0"

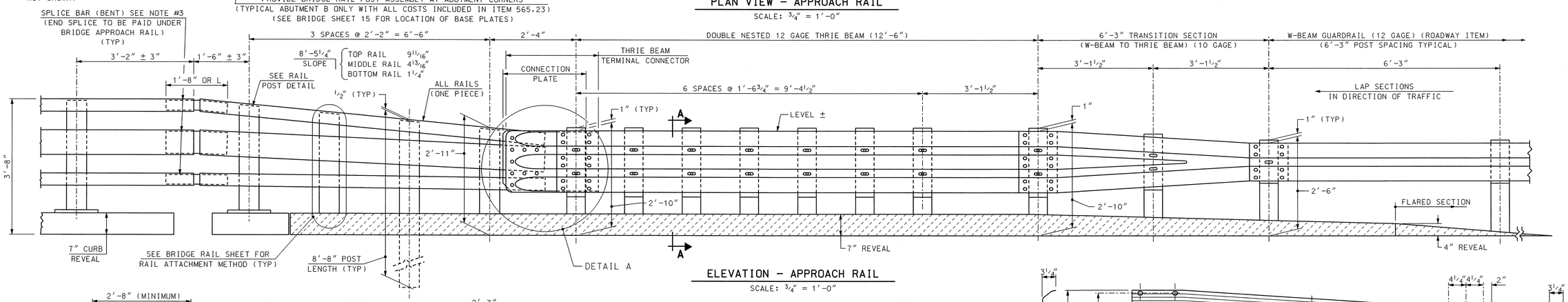

ELEVATION - APPROACH RAIL

SCALE: 3/4" = 1'-0"

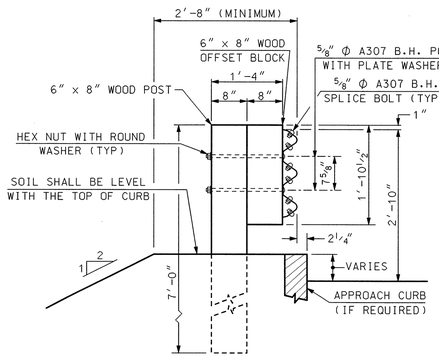

SECTION A-A (POST RAIL ASSEMBLY)

SCALE: 3/4" = 1'-0"

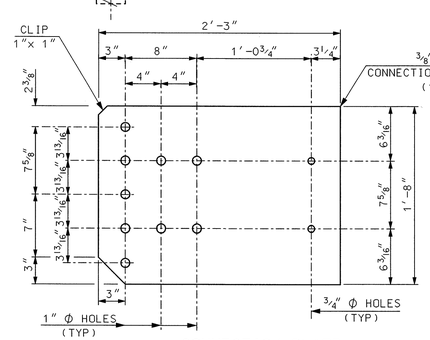

CONNECTION PLATE

SCALE: 1 1/2" = 1'-0"

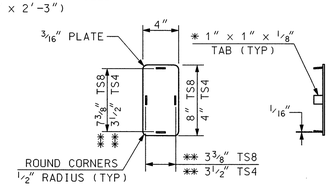

END CAP DETAILS

SCALE: 1 1/2" = 1'-0"

* WELD TABS TO END CAP PLATE IN TAPERED POSITION SO CAP CAN BE JAMMED INTO END OF RAIL TUBE

** SEE RAIL NOTES ON BRIDGE RAIL SHEET

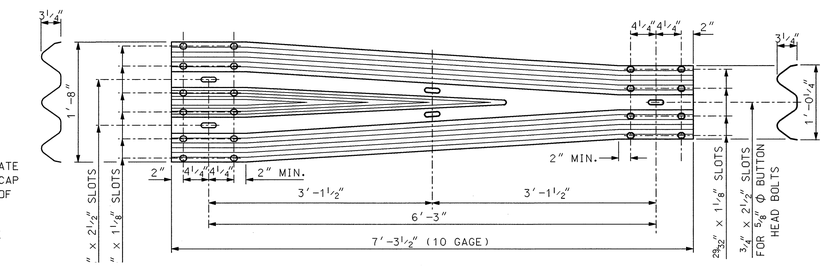

THRIE-BEAM TO W-BEAM TRANSITION SECTION

SCALE: 1" = 1'-0"

NOTE: DETAILS AND NOTES MAY NOT BE CURRENT. CLOSELY REVIEW BEFORE USING DETAILS.

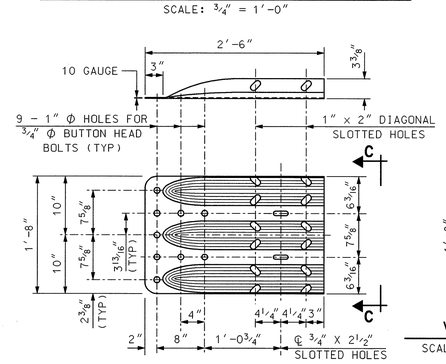

THRIE-BEAM TERMINAL CONNECTOR

SCALE: 1" = 1'-0"

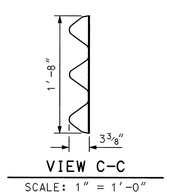

VIEW C-C

SCALE: 1" = 1'-0"

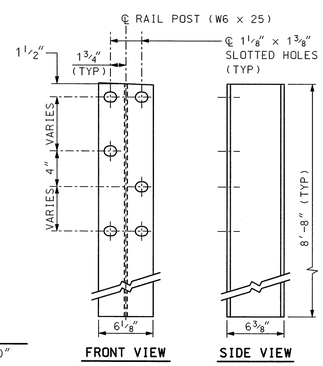

RAIL POST

SCALE: 1 1/2" = 1'-0"

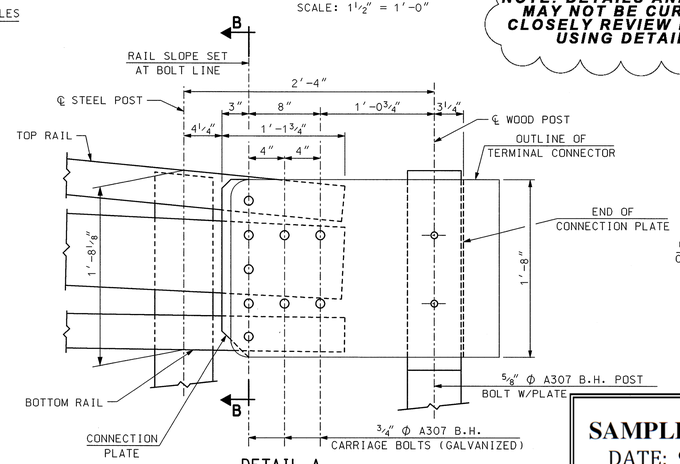

DETAIL A

OVERLAPPING OF DOUBLE NESTED THRIE-BEAM NOT SHOWN FOR CLARITY

SCALE: 1 1/2" = 1'-0"

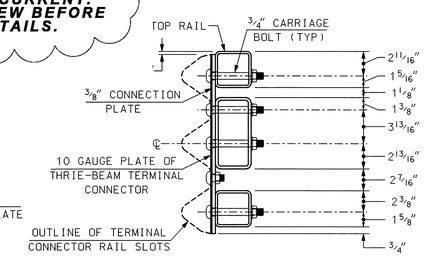

SECTION B-B (CONNECTION PLATE)

SCALE: 1 1/2" = 1'-0"

NOTES:

(1) ALL BRIDGE APPROACH RAIL MATERIALS, DIMENSIONS, SIZES, AND NOTES SHALL BE THE SAME AS THOSE OF THE BRIDGE RAIL, UNLESS OTHERWISE NOTED. SEE BRIDGE RAIL SHEET FOR NOTES AND ADDITIONAL INFORMATION.

(2) CARRIAGE BOLTS SHALL BE ASTM A307, AND NUTS SHALL BE ASTM A563 GRADE A OR BETTER (GALVANIZED).

(3) WELD SPLICE BAR TO FIT BEND. USE COMPLETE JOINT PENETRATION BUTT WELD (B-U2).

(4) THIS BRIDGE RAIL TRANSITION SYSTEM HAS BEEN ACCEPTED FOR NCHRP 350 FOR TL3 BASED ON CRASH TESTING APRIL 2005 BY THE NETC.

SAMPLE PLAN
DATE: 9-2007

SUBDIRECTORY	.DGN LOCATOR	SHEET SCALE
BRC/MiscShts	T3APP_RAIL-B	AS NOTED

STATE OF NEW HAMPSHIRE
DEPARTMENT OF TRANSPORTATION * BUREAU OF BRIDGE DESIGN

TOWN HAVERHILL, N.H. - NEWBURY, VT BRIDGE NO. 099\149 STATE PROJECT 14335

LOCATION NEWBURY ROAD over CONNECTICUT RIVER

T3 STEEL BRIDGE APPROACH RAIL (ABUTMENT B)

REVISIONS AFTER PROPOSAL		BY	DATE		BY	DATE
	DESIGNED	NETC/JSZ	3/02	CHECKED	NHDOT	
	DRAWN	PJP	10/05	CHECKED	JSZ	10/05
	QUANTITIES	MGL	9/07	CHECKED	JAT	9/07
	ISSUE DATE	11/15/05	FEDERAL PROJECT NO.		SHEET NO.	
	REV. DATE	8/30/06	----------		24	

BRIDGE SHEET 20 OF 21
FILE NUMBER 108-1-1
TOTAL SHEETS 27

...\BRC\MiscShts\T3APP_RAIL-B.dgn 9/11/2007 12:29:22 PM n18pjp

Abutment A — BRIDGE SHEET 6 OF 21

Mark	Size	Length	# Pieces	Type	A	B	C	D	E	F	G	H	J	K	R	O
A1	#5	2.33	28	17		0.75	0.83	0.75								EPOXY
A2	#5	1.75	32	—												EPOXY
A3	#5	15.75	2	—												EPOXY
A4	#5	15.75	2	—												EPOXY
A5	#5	6.33	4	N4		2.42	1.50	2.42				1.45		0.38		EPOXY
A6	#5	3.00	6	17		0.75	1.50	0.75								EPOXY
A7	#5	3.00	4	C1		3.00										EPOXY
A8	#5	3.00	4	C2		3.00										EPOXY
A9	#5	16.25	2	—												EPOXY
A10	#5	16.25	2	—												EPOXY

SECTION SUMMARY TOTAL WEIGHT (lbs):

ITEM #	DESCRIPTION	#3	#4	#5	#6	#7	#8	#9	#10	#11	#14	#18	TOTAL
544	REINFORCING STEEL	0	0	0	0	0	0	0	0	0	0	0	0
544.11	MECH. CONNECTOR	0	0	0	0	0	0	0	0	0	0	0	0
544.2	EPOXY COATED	0	0	305	0	0	0	0	0	0	0	0	305
544.21	EPOXY MECH. CON.	0	0	25	0	0	0	0	0	0	0	0	25

Abutment B — BRIDGE SHEET 6 OF 21

Mark	Size	Length	# Pieces	Type	A	B	C	D	E	F	G	H	J	K	R	O
B1	#5	3.33	28	17		1.25	0.83	1.25								EPOXY
B2	#5	2.00	30	—												EPOXY
B3	#5	14.75	2	—												EPOXY
B4	#5	14.75	2	—												EPOXY
B5	#5	5.50	4	17		2.00	1.50	2.00								EPOXY
B6	#5	3.58	2	17		1.58	1.50	0.50								EPOXY
B7	#5	3.17	2	17		1.58	1.08	0.50								EPOXY
B8	#5	6.17	2	N4		2.25	0.83	3.08				0.75		0.25		EPOXY
B9	#5	3.00	4	C1		3.00										EPOXY
B10	#5	3.00	4	C2		3.00										EPOXY
B11	#5	14.25	2	—												EPOXY
B12	#5	14.25	2	—												EPOXY
B13	#5	6.17	2	N4		3.08	0.83	2.25				0.75		0.25		EPOXY

SECTION SUMMARY TOTAL WEIGHT (lbs):

ITEM #	DESCRIPTION	#3	#4	#5	#6	#7	#8	#9	#10	#11	#14	#18	TOTAL
544	REINFORCING STEEL	0	0	0	0	0	0	0	0	0	0	0	0
544.11	MECH. CONNECTOR	0	0	0	0	0	0	0	0	0	0	0	0
544.2	EPOXY COATED	0	0	344	0	0	0	0	0	0	0	0	344
544.21	EPOXY MECH. CON.	0	0	25	0	0	0	0	0	0	0	0	25

Deck — BRIDGE SHEET 14 OF 21

Mark	Size	Length	# Pieces	Type	A	B	C	D	E	F	G	H	J	K	R	O
D1	#5	26.33	440	—												EPOXY
D2	#5	2.58	982	N8		1.50	1.08									EPOXY
D3	#5	4.50	55	N1		0.67	1.08	1.00	1.08	0.67				0.00		EPOXY
D4	#6	13.42	54	C1												EPOXY
D5	#6	11.50	2	C1												EPOXY
D6	#6	9.58	2	C1												EPOXY
D7	#6	7.75	2	C1												EPOXY
D8	#6	5.83	2	C1												EPOXY
D9	#6	4.00	2	C1												EPOXY
D10	#6	2.17	2	C1												EPOXY
D11	#5	4.92	2	—												EPOXY
D12	#5	5.00	2	—												EPOXY
D13	#5	5.50	2	—												EPOXY
D14	#5	5.83	2	—												EPOXY
D15	#5	6.08	2	—												EPOXY
D16	#5	6.33	2	—												EPOXY
D17	#5	6.58	2	—												EPOXY
D18	#5	6.92	2	—												EPOXY
D19	#5	7.25	2	—												EPOXY
D20	#5	7.50	2	—												EPOXY
D21	#5	8.00	2	—												EPOXY
D22	#5	8.17	2	—												EPOXY
D23	#5	8.42	2	—												EPOXY
D24	#6	14.33	9	C1												EPOXY
D25	#6	3.34	32	N2		0.67	0.75	1.17	0.75			0.75		0.00		EPOXY
D26	#6	12.50	2	—												EPOXY
D27	#6	10.67	2	—												EPOXY
D28	#6	8.75	2	—												EPOXY
D29	#6	6.92	2	—												EPOXY
D30	#6	5.00	2	—												EPOXY
D31	#6	3.17	2	—												EPOXY
D32	#5	12.25	2	—												EPOXY
D33	#5	12.17	2	—												EPOXY
D34	#5	11.67	2	—												EPOXY
D35	#5	11.33	2	—												EPOXY
D36	#5	11.08	2	—												EPOXY
D37	#5	10.83	2	—												EPOXY
D38	#5	10.50	2	—												EPOXY
D39	#5	10.25	2	—												EPOXY
D40	#5	10.00	2	—												EPOXY
D41	#5	9.67	2	—												EPOXY
D42	#5	9.25	2	—												EPOXY
D43	#5	9.00	2	—												EPOXY
D44	#5	8.83	2	—												EPOXY
D45	#6	7.50	6	—												EPOXY
D46	#6	4.42	28	N2		1.00	0.83	1.34	1.25			0.88		0.88		EPOXY
D47	#6	2.17	9	C1												EPOXY
D48	#6	3.33	1610	C2		3.33										EPOXY
D49	#6	16.50	50	—												EPOXY
D50	#6	15.33	2	—												EPOXY
D51	#6	13.33	2	—												EPOXY
D52	#6	11.58	2	—												EPOXY
D53	#6	9.75	2	—												EPOXY
D54	#6	7.92	2	—												EPOXY
D55	#6	6.00	2	—												EPOXY
D56	#6	4.17	2	—												EPOXY
D57	#6	2.25	2	—												EPOXY
D58	#5	9.58	2	—												EPOXY
D59	#5	9.75	2	—												EPOXY
D60	#5	10.00	2	—												EPOXY
D61	#5	10.42	2	—												EPOXY
D62	#5	10.75	2	—												EPOXY
D63	#5	11.00	2	—												EPOXY
D64	#5	11.25	2	—												EPOXY
D65	#5	11.58	2	—												EPOXY
D66	#5	11.83	2	—												EPOXY
D67	#5	12.17	2	—												EPOXY
D68	#5	12.42	2	—												EPOXY
D69	#5	12.92	2	—												EPOXY
D70	#5	13.00	2	—												EPOXY
D71	#6	17.50	9	—												EPOXY
D72	#6	15.42	2	—												EPOXY
D73	#6	13.58	2	—												EPOXY
D74	#6	11.67	2	—												EPOXY
D75	#6	9.83	2	—												EPOXY
D76	#6	8.00	2	—												EPOXY
D77	#6	6.08	2	—												EPOXY
D78	#6	4.25	2	—												EPOXY
D79	#5	7.58	2	—												EPOXY
D80	#5	7.42	2	—												EPOXY
D81	#5	7.25	2	—												EPOXY
D82	#5	6.75	2	—												EPOXY
D83	#5	6.42	2	—												EPOXY
D84	#5	6.17	2	—												EPOXY
D85	#5	5.92	2	—												EPOXY
D86	#5	5.58	2	—												EPOXY
D87	#5	5.33	2	—												EPOXY
D88	#5	5.08	2	—												EPOXY
D89	#5	4.83	2	—												EPOXY
D90	#5	4.25	2	—												EPOXY
D91	#5	4.17	2	—												EPOXY
D92	#6	5.33	3	—												EPOXY

SECTION SUMMARY TOTAL WEIGHT (lbs):

ITEM #	DESCRIPTION	#3	#4	#5	#6	#7	#8	#9	#10	#11	#14	#18	TOTAL
544	REINFORCING STEEL	0	0	0	0	0	0	0	0	0	0	0	0
544.11	MECH. CONNECTOR	0	0	0	0	0	0	0	0	0	0	0	0
544.2	EPOXY COATED	0	0	15919	2473	0	0	0	0	0	0	0	18392
544.21	EPOXY MECH. CON.	0	0	0	9487	0	0	0	0	0	0	0	9487

GRAND SUMMARY TOTAL WEIGHT (lbs):

ITEM #	DESCRIPTION	#3	#4	#5	#6	#7	#8	#9	#10	#11	#14	#18	TOTAL
544	REINFORCING STEEL	0	0	0	0	0	0	0	0	0	0	0	0
544.11	MECH. CONNECTOR	0	0	0	0	0	0	0	0	0	0	0	0
544.2	EPOXY COATED	0	0	16568	2473	0	0	0	0	0	0	0	19041
544.21	EPOXY MECH. CON.	0	0	50	9487	0	0	0	0	0	0	0	9537

NOTE: DETAILS AND NOTES MAY NOT BE CURRENT. CLOSELY REVIEW BEFORE USING DETAILS.

SAMPLE PLAN
DATE: 9-2007

STANDARD INDUSTRY BENDS, STIRRUPS, & TIES

RECOMMENDED END HOOKS ALL GRADES (in.)				
BAR	180° HOOKS			90° HOOKS
SIZE	D(∅)	A or G	J	A or G
#3	2 1/4	5	3	6
#4	3	6	4	8
#5	3 3/4	7	5	10
#6	4 1/2	8	6	12
#7	5 1/4	10	7	14
#8	6	11	8	16
#9	9 1/2	15	11 3/4	19
#10	10 3/4	17	13 1/4	22
#11	12	19	14 3/4	24
#14	18 1/4	27	21 3/4	31

STIRRUP & TIE HOOK DIMENSIONS GRADES 40-50-60 ksi			
BAR	D(∅)	90° HOOKS	135° HOOKS
SIZE	(in.)	A or G	A or G	H(approx)
#3	1 1/2	4	4	2 1/2
#4	2	4 1/2	4 1/2	3
#5	2 1/2	6	5 1/2	3 3/4
#6	4 1/2	12	7 3/4	4 1/4
#7	5 1/4	14	9	5 1/4
#8	6	16	10 1/4	6

NOTE: D = finished inside bend d of hook.
See 1997 CRSI Manual p6-3&4.
For additional data on standard bar bends not shown on this sheet see 1997 CRSI Manual p6-3&4.

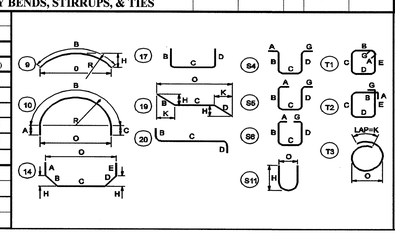

STANDARD N.H. & SPECIAL BENDS

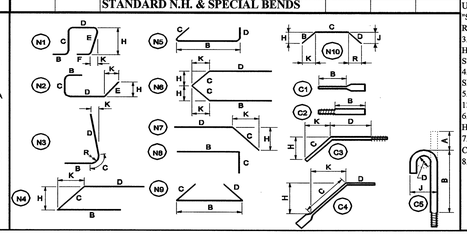

NOTES:
1. FIGURES IN CIRCLE SHOW TYPE OF BEND.
2. UNLESS OTHERWISE DESIGNATED, ALL BAR REINFORCEMENT FOR CONCRETE IN SIZES UP TO AND INCLUDING NO. 18 SHALL CONFORM TO THE REQUIREMENTS OF THE "SPECIFICATIONS FOR DEFORMED BILLET - STEEL BARS FOR CONCRETE REINFORCEMENT", AASHTO M 31-94 (ASTM A615).
3. FOR TYPICAL BENDING DETAILS, RECOMMENDED PIN DIAMETER "D" OF BENDS AND HOOKS AND OTHER STANDARD PRACTICE SEE CURRENT (1990) CONCRETE REINFORCING STEEL INSTITUTE "MANUAL OF STANDARD PRACTICE", P. 6-4.
4. BARS WHICH REQUIRE MORE ACCURATE BENDING THAN STANDARD PRACTICES SHOULD HAVE LIMITS INDICATED.
5. ALL DIMENSIONS ARE OUT TO OUT OF BAR EXCEPT "A" AND "G" ON STANDARD 180° AND 135° HOOKS.
6. "J" DIMENSION ON 180 ° HOOKS TO BE SHOWN ONLY WHEN NECESSARY TO RESTRICT HOOK SIZE, OTHERWISE STANDARD HOOKS ARE TO BE USED.
7. "H" DIMENSION ON STIRRUPS TO BE SHOWN ONLY WHEN NECESSARY TO MAINTAIN CLEARANCES.
8. WHERE SLOPE DIFFERS FROM 45° DIMENSIONS "H" AND "K" MUST BE SHOWN.

▲ DENOTES BARS TO BE CUT IN FIELD, AS REQUIRED.
△ DENOTES BARS TO BE BENT IN FIELD.

ASTM STANDARD REINFORCING BARS			
BAR SIZE DESIGNATION	WEIGHT LBS. PER FOOT	NOM. DIMEN. DIAM. in	CROSS SECT. AREA in²
#3	0.376	0.375	0.11
#4	0.668	0.500	0.20
#5	1.043	0.625	0.31
#6	1.502	0.750	0.44
#7	2.044	0.875	0.60
#8	2.670	1.000	0.79
#9	3.400	1.128	1.00
#10	4.303	1.270	1.27
#11	5.313	1.410	1.56
#14	7.650	1.693	2.25
#18	13.600	2.257	4.00

STATE OF NEW HAMPSHIRE
DEPARTMENT OF TRANSPORTATION BUREAU OF BRIDGE DESIGN

TOWN: HAVERHILL, NH - NEWBURY, VT | BRIDGE NO. 099/149 | STATE PROJECT 14335
LOCATION: NEWBURY ROAD OVER CONNECTICUT RIVER

REINFORCING SCHEDULE (SHEET 1 OF1) — BRIDGE SHEET 21 of 21

	BY	DATE		BY	DATE	REVISIONS AFTER PROPOSAL
DESIGNED	MGL	09/07	CHECKED	JWP	09/07	
DRAWN	MGL	09/07	CHECKED			
TRACED			CHECKED			FEDERAL PROJECT NUMBER
QUANTITIES	GMC/PJP	09/07	CHECKED	MGL	09/07	

FILE NO. 108-1-1
SHEET 25 of 27