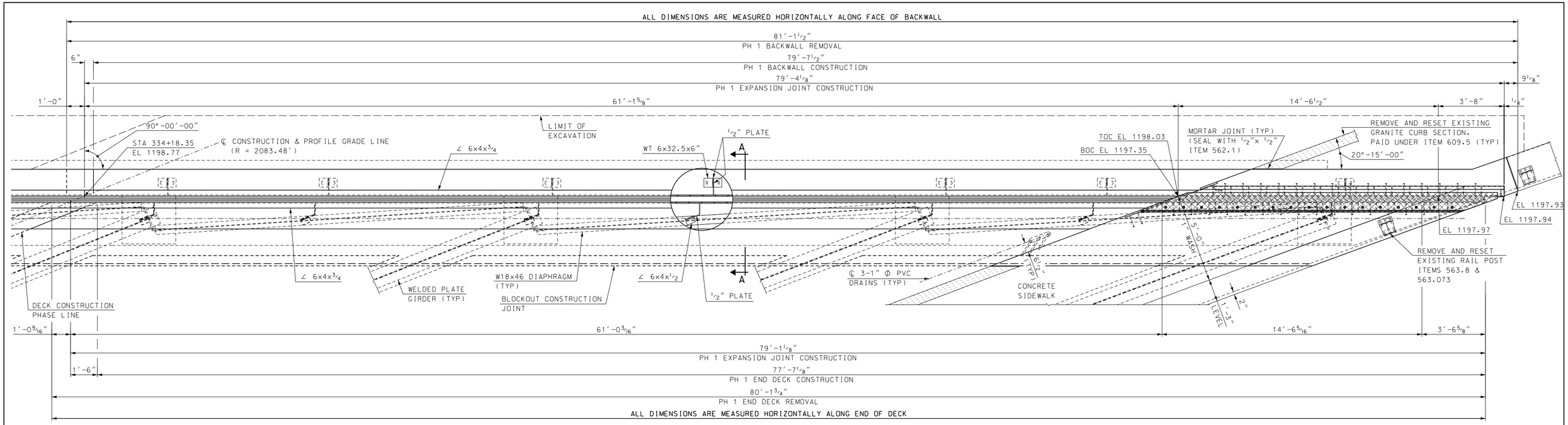

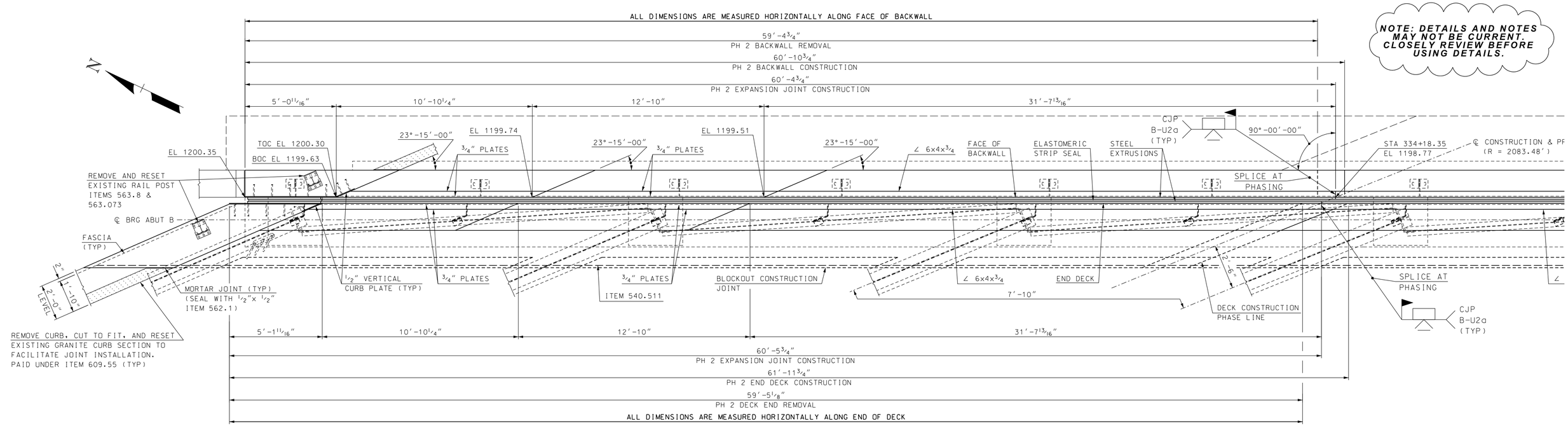

NOTE: DETAILS AND NOTES MAY NOT BE CURRENT. CLOSELY REVIEW BEFORE USING DETAILS.

ELEVATIONS SHOWN ARE FROM EXISTING PLANS AND SHOULD BE FIELD VERIFIED.

PLAN VIEW

SCALE: 3/8" = 1'-0"

NOTE:
ALL ELEVATIONS AT THE FACE OF BACKWALL ARE 3/8" HIGHER THAN EXISTING 1982 PLANS (1/2" RAISE FROM MAINTENANCE WORK, 1/8" REDUCTION AT EXPANSION JOINT).

FOR SECTION A-A SEE BRIDGE SHEET 16.

SAMPLE PLAN
DATE: 9-2020

SUBDIRECTORY	.DGN LOCATOR	SHEET SCALE
BRC\BETHLEHEM	125-177 exp jt B	AS NOTED

STATE OF NEW HAMPSHIRE
DEPARTMENT OF TRANSPORTATION * BUREAU OF BRIDGE DESIGN

TOWN BETHLEHEM BRIDGE NO. 125/177 STATE PROJECT 42501

LOCATION US ROUTE 302 & NH ROUTE 10 over AMMONOOSUC RIVER

ABUT B STRIP SEAL EXP JT BR NO 125/177(1 OF 4)

BRIDGE SHEET 15 OF 34

REVISIONS AFTER PROPOSAL

	BY	DATE		BY	DATE
DESIGNED	JEH	2/20	CHECKED	ABH	7/20
DRAWN	SMG/GMC	2/20	CHECKED	ABH	7/20
QUANTITIES	JEH	8/20	CHECKED	PML	8/20

FILE NUMBER 136-4-1

ISSUE DATE	FEDERAL PROJECT NO.	SHEET NO.	TOTAL SHEETS
REV. DATE	----------	19	38

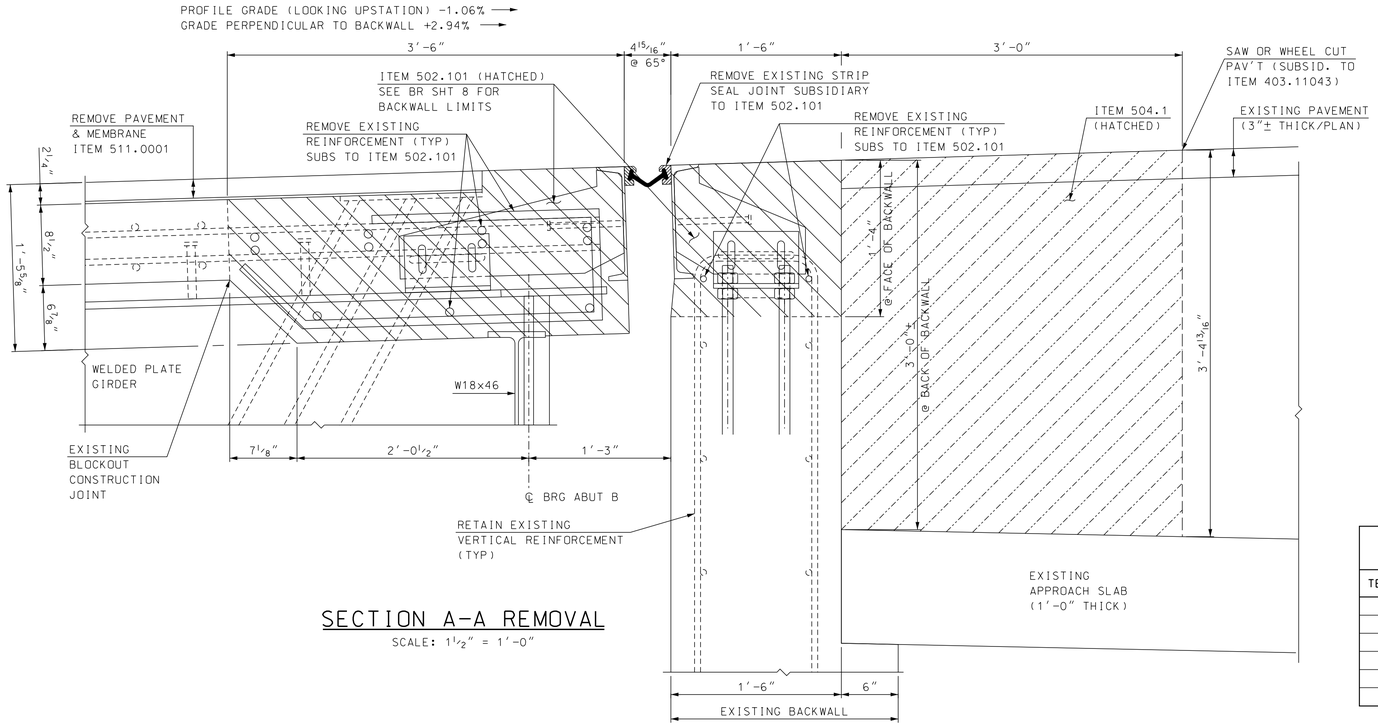

SECTION A-A REMOVAL

SCALE: 1 1/2" = 1'-0"

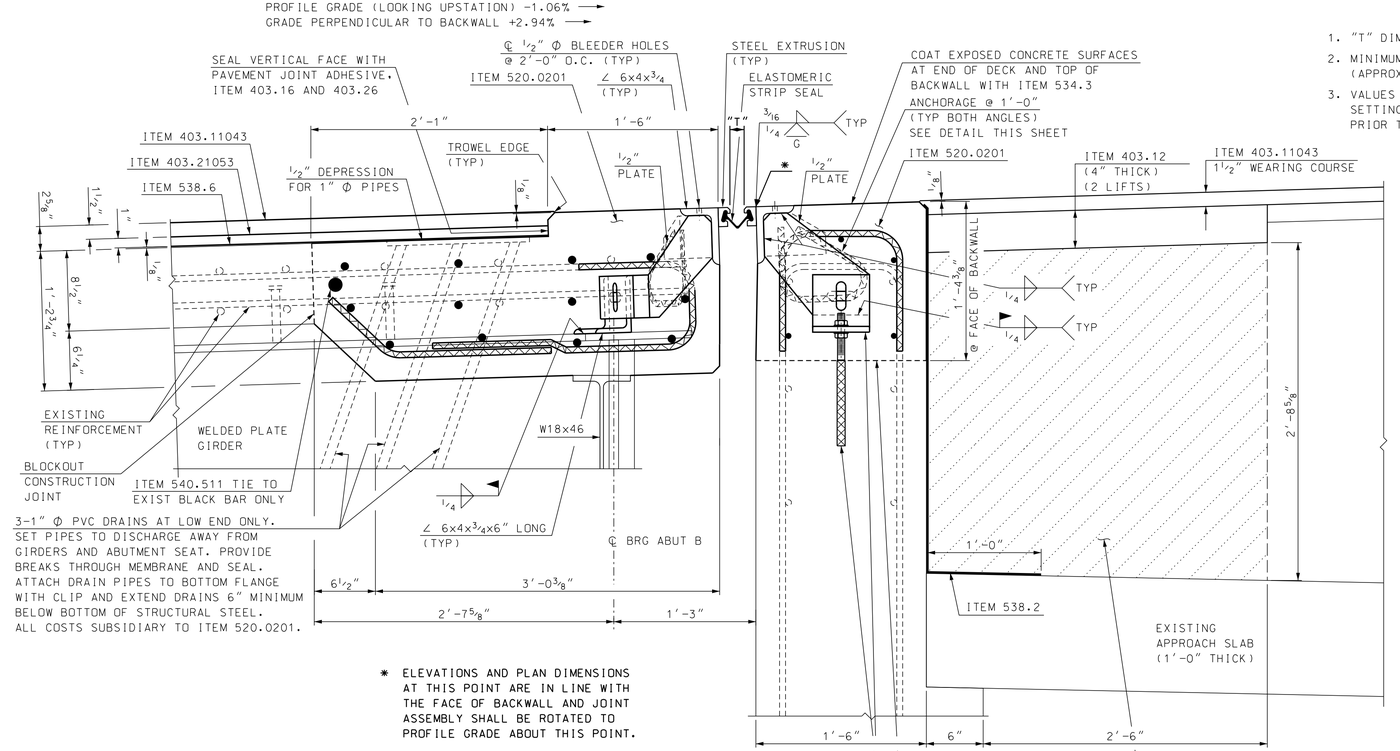

* ELEVATIONS AND PLAN DIMENSIONS AT THIS POINT ARE IN LINE WITH THE FACE OF BACKWALL AND JOINT ASSEMBLY SHALL BE ROTATED TO PROFILE GRADE ABOUT THIS POINT.

SECTION A-A CONSTRUCTION

SCALE: 1 1/2" = 1'-0"

NOTE: DETAILS AND NOTES MAY NOT BE CURRENT. CLOSELY REVIEW BEFORE USING DETAILS.

TEMPERATURE ADJUSTMENT TABLE	
TEMPERATURE	"T"
20°F	1 11/16"
35°F	1 5/8"
50°F	1 9/16"
65°F	1 1/2"
80°F	1 7/16"
95°F	1 3/8"

TEMPERATURE ADJUSTMENT NOTES

1. "T" DIMENSIONS ARE PERPENDICULAR TO FACE OF BACKWALL.
2. MINIMUM "T" WIDTH FOR SEAL INSTALLATION = 1 1/2" (APPROXIMATELY 65°F OR LESS).
3. VALUES IN THE TEMPERATURE ADJUSTMENT TABLE ARE FOR SETTING THE EXPANSION JOINT ASSEMBLY IMMEDIATELY PRIOR TO POURING THE DECK BLOCKOUT.

EXPANSION JOINT NOTES

(1) ALL EXPANSION JOINT STEEL, INCLUDING ANCHORS, SHALL BE GALVANIZED. STEEL ANGLES SHALL BE ASTM A572 GRADE 50. MINOR STEEL PLATES MAY CONFORM TO ASTM A36. THE ENTIRE ASSEMBLY, INCLUDING STRIP SEAL, SHALL BE PAID FOR AS ITEM 561.1001, PREFABRICATED STRIP SEAL EXPANSION JOINT (F).

(2) SPLICES FOR STEEL ANGLES SHALL DEVELOP FULL STRENGTH.

(3) EXPANSION JOINT OPENING SHALL BE ADJUSTED TO TEMPERATURE ANTICIPATED JUST PRIOR TO POURING DECK BLOCKOUT. FINAL SETTING IN THE FIELD SHALL BE DETERMINED BY THE CONTRACT ADMINISTRATOR. SEE TEMPERATURE ADJUSTMENT TABLE & NOTES.

(4) STRIP SEAL SHALL BE FURNISHED IN ONE CONTINUOUS LENGTH. NO SPLICES WILL BE ALLOWED. SEAL SHALL BE INSTALLED IN THE FIELD BY THE CONTRACTOR, IN ACCORDANCE WITH THE MANUFACTURER OF THE SEAL, USING AN APPROVED TOOL THAT WILL NOT DAMAGE THE SEAL.

(5) JOINT SUPPORT PLATES AND CURB PLATES SHALL BE SHOP WELDED TO EXPANSION JOINT STEEL AND SHALL BE NORMAL TO GRADE AFTER JOINT ASSEMBLY HAS BEEN ADJUSTED FOR ROADWAY CROSS-SLOPE AND GRADE. STEEL ANGLES AND EXTRUSIONS SHALL BE ASSEMBLED WITH A CONSTANT JOINT OPENING TO ENSURE PROPER PERFORMANCE AND WATER TIGHTNESS.

(6) IMMEDIATELY AFTER THE JOINT HAS BEEN SECURED TO THE STRUCTURAL STEEL AND BACKWALL, REMOVE SHIPPING DEVICES AND GRIND SMOOTH ANY WELDS ON EXPOSED SURFACES. REPAIR ANY DAMAGE TO GALVANIZED SURFACES IN ACCORDANCE WITH SECTION 550.

(7) PROTECT TOP OF EXPANSION JOINT DURING PLACEMENT OF CONCRETE AND BITUMINOUS PAVEMENT.

(8) THE STRIP SEAL HAS BEEN DESIGNED FOR A TOTAL FACTORED MOVEMENT OF 1.21 INCHES. DESIGN INCLUDES MOVEMENT DUE TO TEMPERATURE, SKEW, SHRINKAGE AND MINIMUM INSTALLATION WIDTH. THE CONTRACTOR SHALL USE AN SE-400 SEAL BY WATSON BOWMAN OR A2R-400 BY D.S. BROWN.

(9) ELEVATIONS SHOWN AT TOP OF ANGLES ARE 1/8" LOWER THAN PROPOSED FINISHED ROADWAY GRADE.

(10) NO "LOW PROFILE" STEEL EXTRUSIONS SHALL BE ALLOWED. SEE OPL FOR APPROVED PRODUCTS.

(11) PRIOR TO INSTALLING THE SEAL, ALL TEMPORARY FORM WORK SHALL BE REMOVED. STEEL ANGLES AND EXTRUSIONS SHALL BE MAINTAINED FREE FROM DIRT, WATER, AND ANY OTHER LOOSE DEBRIS, WITH THE USE OF COMPRESSED AIR, TO ENSURE PROPER FIT OF THE SEAL. CARE SHALL BE TAKEN NOT TO DAMAGE GALVANIZED SURFACES.

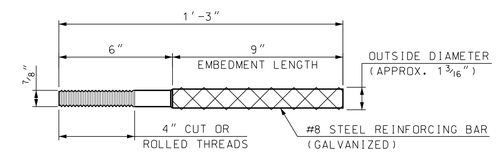

ANCHOR ROD DETAIL

(14 REQUIRED)
SCALE: NTS

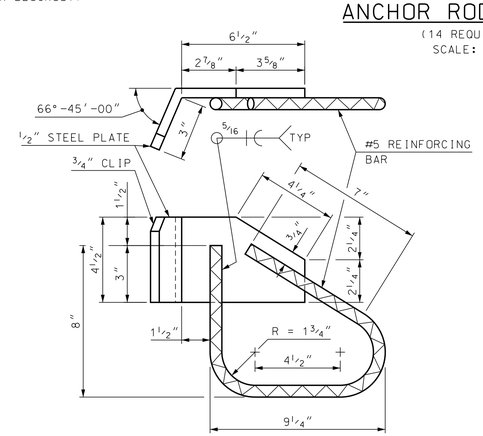

DECK ANCHORAGE DETAIL

SCALE: 3" = 1'-0"

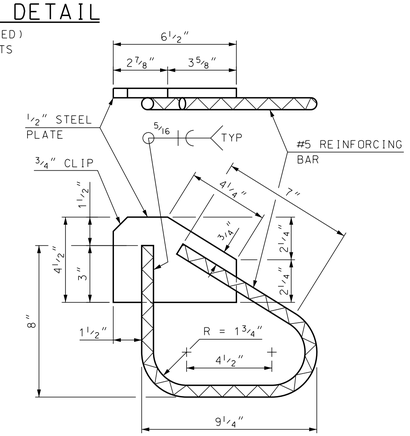

BACKWALL ANCHORAGE DETAIL

SCALE: 3" = 1'-0"

FOR LOCATION OF SECTION A-A SEE BRIDGE SHEET 15.

SAMPLE PLAN

DATE: 9-2020

SUBDIRECTORY	.DGN LOCATOR	SHEET SCALE
BRC\BETHLEHEM	125-177 exp jt B	AS NOTED

STATE OF NEW HAMPSHIRE
DEPARTMENT OF TRANSPORTATION * BUREAU OF BRIDGE DESIGN

TOWN BETHLEHEM BRIDGE NO. 125/177 STATE PROJECT 42501

LOCATION US ROUTE 302 & NH ROUTE 10 over AMMONOOSUC RIVER

ABUT B STRIP SEAL EXP JT BR NO 125/177 (2 OF 4)

REVISIONS AFTER PROPOSAL		BY	DATE		BY	DATE
	DESIGNED	JEH	2/20	CHECKED	ABH	7/20
	DRAWN	SMG/GMC	2/20	CHECKED	ABH	7/20
	QUANTITIES	JEH	8/20	CHECKED	PML	8/20

ISSUE DATE	FEDERAL PROJECT NO.	SHEET NO.
REV. DATE	----------	20

BRIDGE SHEET 16 OF 34
FILE NUMBER 136-4-1
TOTAL SHEETS 38

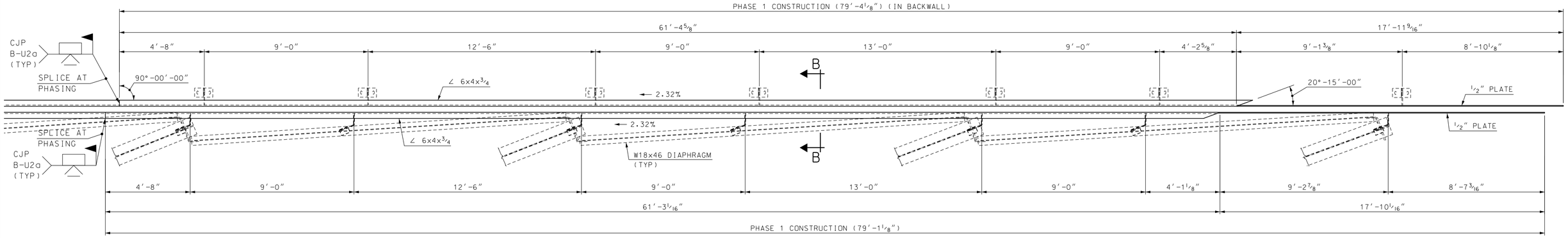

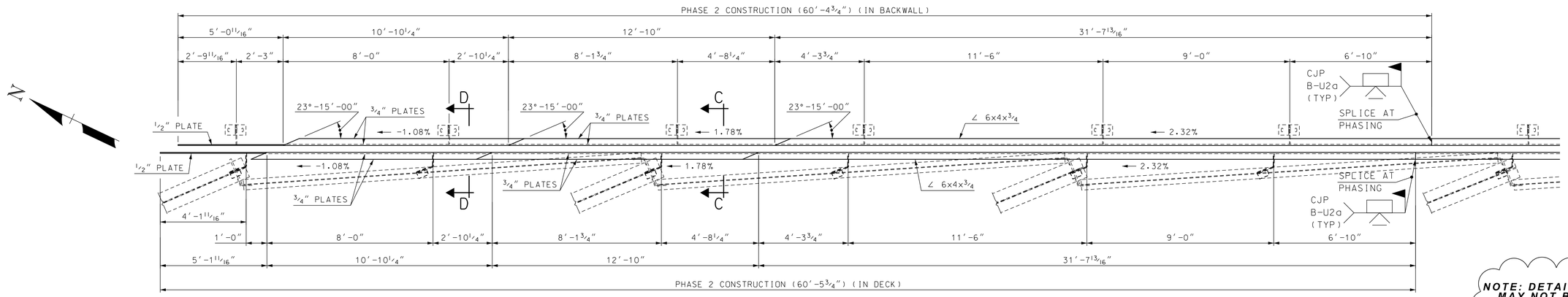

SUPPORT AND PLATE LAYOUT

SCALE: 3/8" = 1'-0"

NOTE: DETAILS AND NOTES MAY NOT BE CURRENT. CLOSELY REVIEW BEFORE USING DETAILS.

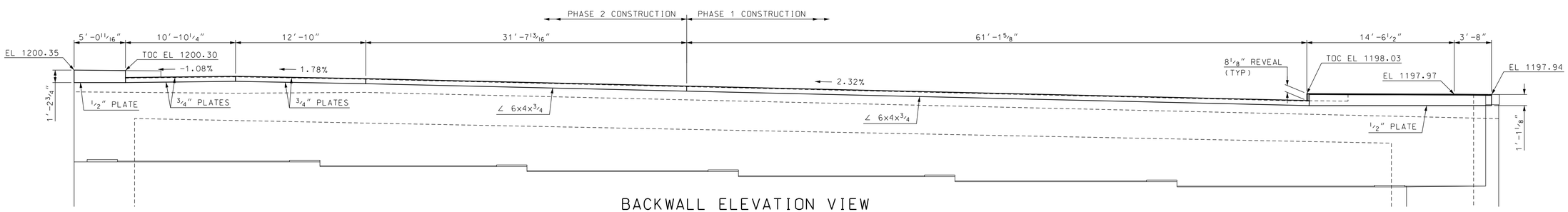

BACKWALL ELEVATION VIEW

SCALE: 3/16" = 1'-0"

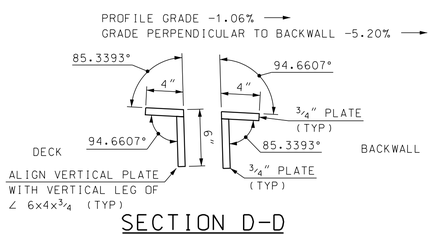

SECTION D-D

SCALE: 1 1/2" = 1'-0"

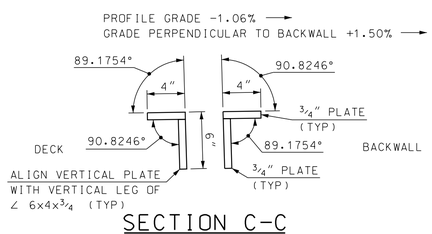

SECTION C-C

SCALE: 1 1/2" = 1'-0"

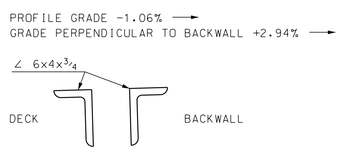

SECTION B-B

SCALE: 1 1/2" = 1'-0"

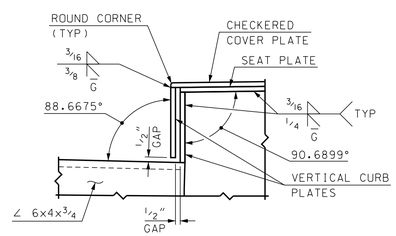

SIDEWALK CURB DETAIL

SCALE: 1 1/2" = 1'-0"

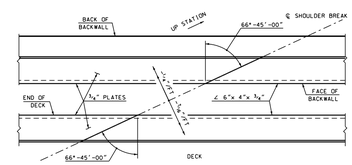

PLATE/ANGLE CONNECTION PLAN

SAMPLE PLAN

DATE: 9-2020

STATE OF NEW HAMPSHIRE

DEPARTMENT OF TRANSPORTATION * BUREAU OF BRIDGE DESIGN

TOWN BETHLEHEM BRIDGE NO. 125/177 STATE PROJECT 42501

LOCATION US ROUTE 302 & NH ROUTE 10 over AMMONOOSUC RIVER

ABUT B STRIP SEAL EXP JT BR NO 125/177 (3 OF 4)

REVISIONS AFTER PROPOSAL		BY	DATE		BY	DATE
	DESIGNED	JEH	2/20	CHECKED	ABH	7/20
	DRAWN	SMG/GMC	2/20	CHECKED	ABH	7/20
	QUANTITIES	JEH	8/20	CHECKED	PML	8/20

ISSUE DATE	FEDERAL PROJECT NO.	SHEET NO.	TOTAL SHEETS
REV. DATE	----------	21	38

BRIDGE SHEET 17 OF 34

FILE NUMBER 136-4-1

SUBDIRECTORY	.DGN LOCATOR	SHEET SCALE
BRC\BETHLEHEM	125-177 exp jt B	AS NOTED

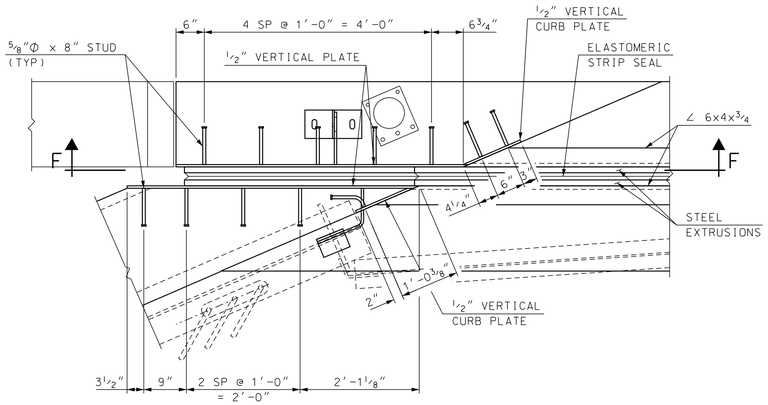

STUD LAYOUT COPING

SCALE: 3/4" = 1'-0"

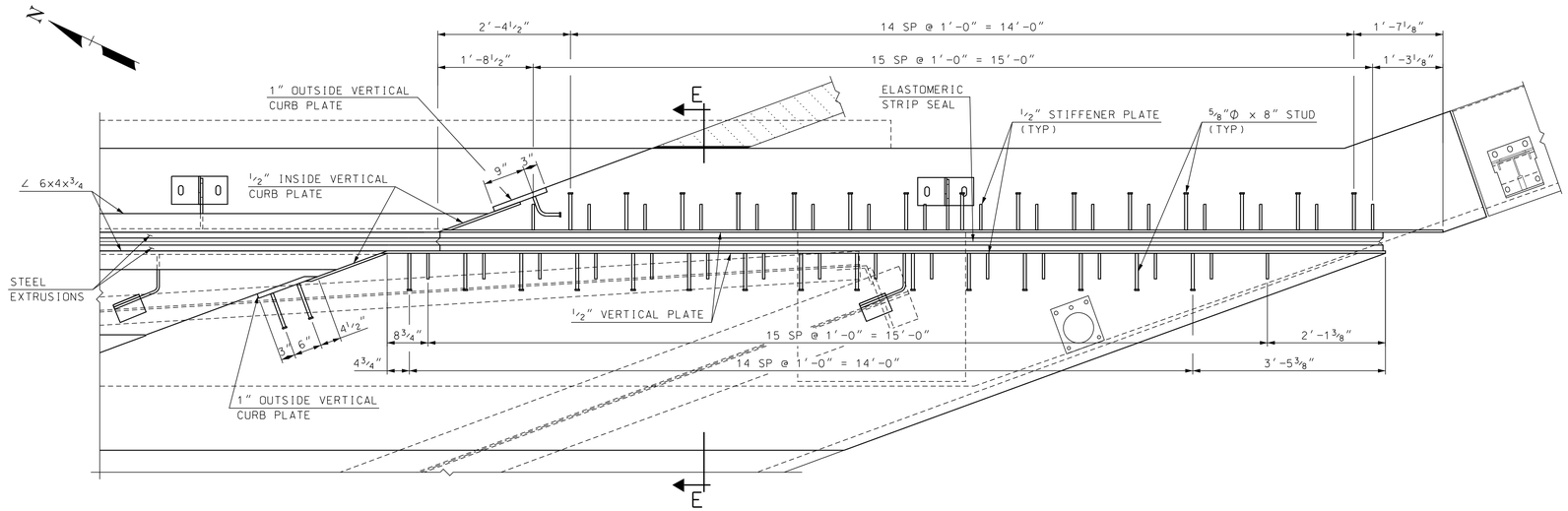

LOWER ASSEMBLY

SCALE: 3/4" = 1'-0"

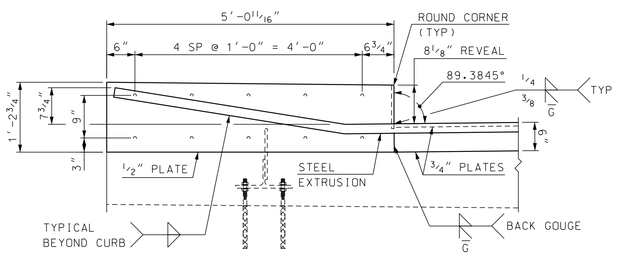

SECTION F-F

SCALE: 3/4" = 1'-0"

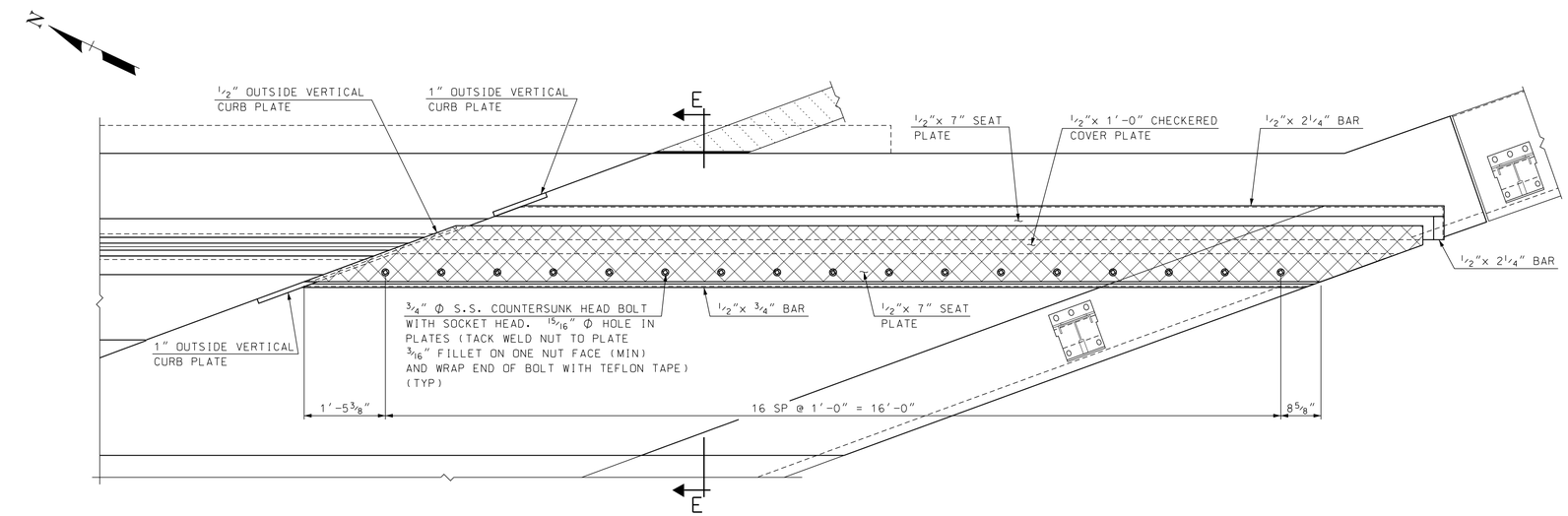

UPPER ASSEMBLY

SCALE: 3/4" = 1'-0"

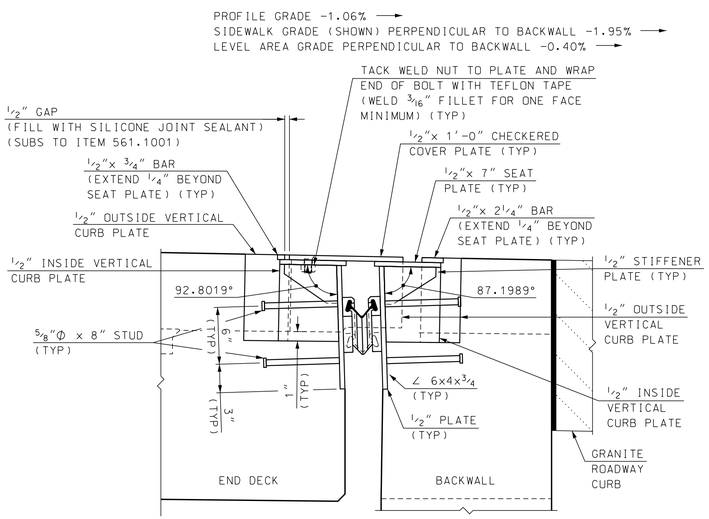

SECTION E-E

SCALE: 1 1/2" = 1'-0"

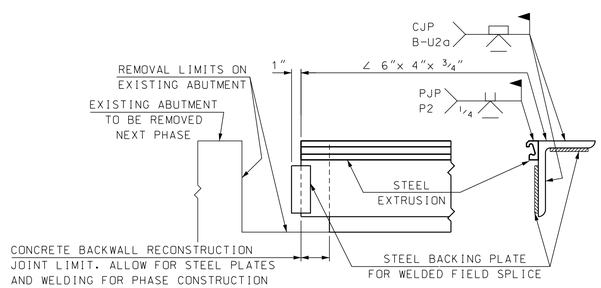

PHASE CONSTRUCTION FIELD WELD SPLICE DETAILS

NOT TO SCALE

NOTE: DETAILS AND NOTES MAY NOT BE CURRENT. CLOSELY REVIEW BEFORE USING DETAILS.

SAMPLE PLAN

DATE: 9-2020

SUBDIRECTORY	.DGN LOCATOR	SHEET SCALE
BRC\BETHLEHEM	125-177 exp jt B	AS NOTED

STATE OF NEW HAMPSHIRE

DEPARTMENT OF TRANSPORTATION * BUREAU OF BRIDGE DESIGN

TOWN BETHLEHEM BRIDGE NO. 125/177 STATE PROJECT 42501

LOCATION US ROUTE 302 & NH ROUTE 10 over AMMONOOSUC RIVER

ABUT B STRIP SEAL EXP JT BR NO 125/177 (4 OF 4)

BRIDGE SHEET 18 OF 34

REVISIONS AFTER PROPOSAL		BY	DATE		BY	DATE
	DESIGNED	JEH	2/20	CHECKED	ABH	7/20
	DRAWN	SMG/GMC	2/20	CHECKED	ABH	7/20
	QUANTITIES	JEH	8/20	CHECKED	PML	8/20

ISSUE DATE	FEDERAL PROJECT NO.	SHEET NO.	TOTAL SHEETS
REV. DATE	----------	22	38

FILE NUMBER 136-4-1