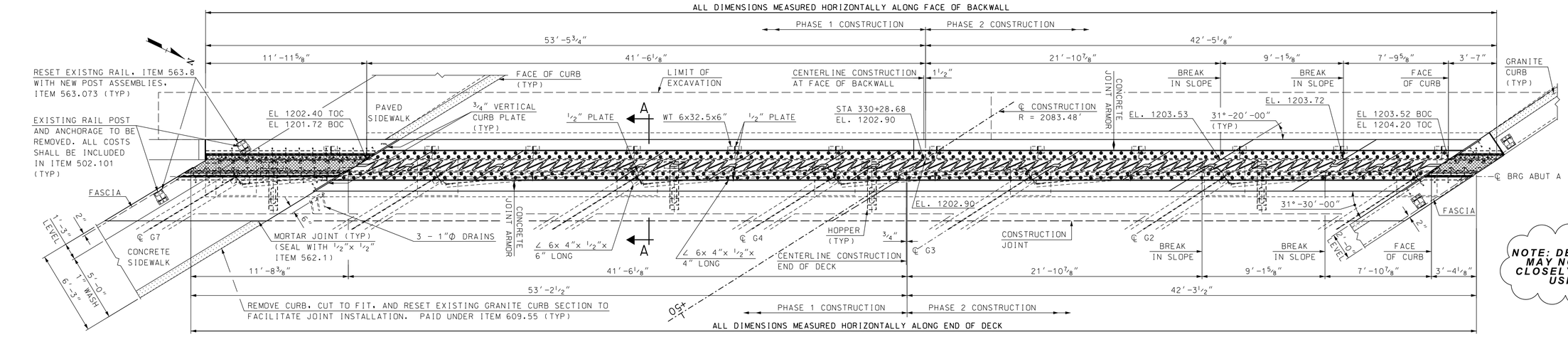

NOTE: DETAILS AND NOTES MAY NOT BE CURRENT. CLOSELY REVIEW BEFORE USING DETAILS.

PLAN - ABUTMENT A FINGER JOINT

SCALE: 1/4" = 1'-0"

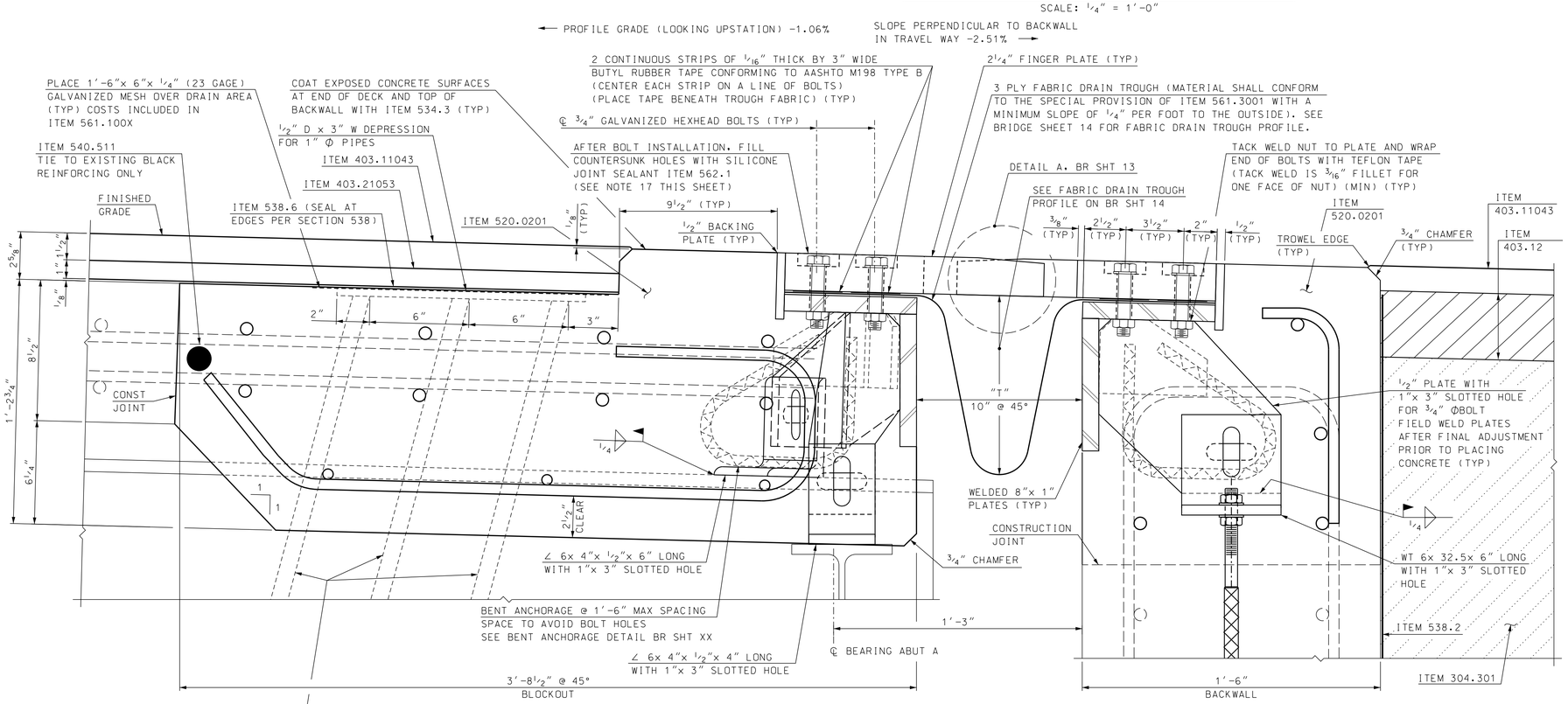

3 - 1" Φ PVC DRAINS. SET PIPES TO DISCHARGE AWAY FROM GIRDERS AND ABUTMENT SEAT. PROVIDE BREAKS THROUGH MEMBRANE AND SEAL. ATTACH DRAIN PIPES TO BOTTOM FLANGE WITH CLIP AND EXTEND DRAINS 12" MINIMUM BELOW BOTTOM OF STRUCTURAL STEEL. LOW END OF JOINT ONLY. ALL COSTS SUBSIDIARY TO ITEM 520.7002.

SECTION A-A

SCALE: 3" = 1'-0"

EXPANSION JOINT NOTES

1. EXPANSION JOINT STEEL SHALL BE AASHTO M223 (ASTM A572) GR 50. MINOR STEEL PLATES MAY CONFORM TO AASHTO M183 (ASTM A36). ALL STEEL SHALL BE GALVANIZED. THE ENTIRE ASSEMBLY SHALL BE PAID AS ITEM 561.3001, PREFABRICATED FINGER EXPANSION JOINT (F).
2. BOLTS IN THE CURBS OR SIDEWALKS SHALL BE STAINLESS STEEL COUNTERSUNK HEAD BOLTS WITH SOCKET HEAD AND SHALL CONFORM TO ASTM A276, TYPE 304. BOLTS IN THE ROADWAY SHALL BE GALVANIZED HIGH-STRENGTH BOLTS AND SHALL CONFORM TO ASTM A325. ANCHOR RODS SHALL BE GALVANIZED AND CONFORM TO ASTM A307.
3. SPLICES FOR EXPANSION JOINT STEEL SHALL DEVELOP FULL STRENGTH.
4. THE EXPANSION JOINT SHALL BE PRESET TO THE TEMPERATURE ANTICIPATED AT THE TIME OF INSTALLATION. FINAL SETTING IN THE FIELD SHALL BE DETERMINED BY THE ENGINEER (SEE TEMPERATURE TABLE ON THEIS SHEET). THE MAXIMUM MOVEMENT IS 3 1/4 INCHES.
5. PROTECT TOP OF EXPANSION JOINT DURING PLACEMENT OF CONCRETE AND BITUMINOUS PAVEMENT.
6. JOINT SUPPORT PLATES SHALL BE SHOP WELDED TO THE EXPANSION JOINT STEEL AND SHALL BE VERTICAL AFTER THE JOINT ASSEMBLY HAS BEEN ADJUSTED FOR ROADWAY CROSS-SLOPE AND GRADE.
7. FASCIA AND CURB PLATES SHALL BE SHOP WELDED AND SHALL BE VERTICAL AFTER THE JOINT ASSEMBLY HAS BEEN ADJUSTED FOR ROADWAY CROSS-SLOPE AND GRADE.
8. IMMEDIATELY AFTER THE JOINT HAS BEEN SECURED TO THE STRUCTURAL STEEL AND BACKWALL, REMOVE SHIPPING DEVICES. WELDING OF SHIPPING DEVICES TO FINGER PLATE SHALL NOT BE ALLOWED.
9. THE FINGER PLATES SHALL BE CUT FROM ONE CONTINUOUS 2'-0" WIDE x 2 1/4" THICK PLATE AS SHOWN ON THE FINGER CUTTING DETAIL, AND FURNISHED IN 9 DIFFERENT LENGTHS.
10. THE HOPPERS AND DOWNSPOUTS SHALL BE A36 STEEL AND GALVANIZED IN ACCORDANCE WITH SECTION 550. PAYMENT FOR HOPPERS, BLOCKING PADS AND ALL ATTACHMENTS WILL BE SUBSIDIARY TO ITEM 561.3001.
11. ELEVATIONS SHOWN AT TOP OF FINGER PLATES ARE 1/8" LOWER THAN THE PROPOSED FINISHED ROADWAY GRADE.
12. SEE BRIDGE SHEET 14 FOR HOPPER DETAILS.
13. THE FABRIC TROUGH SHALL BE PREFORMED FABRIC MATERIAL AND SHALL BE CUT DURING SHOP PRE-ASSEMBLY. THE TROUGH MAY BE SUPPLIED IN 8 LENGTHS WITH 1'-0" OVERLAP AS REQUIRED. SEE BRIDGE SHEET 14 FOR FABRIC TROUGH SPLICE DETAIL.
14. TRIM EXCESS FABRIC BEHIND CURB PLATES.
15. RUBBER BLOCKS USED BETWEEN ABUTMENT CONCRETE AND DOWNSPOUTS SHALL BE MOLDED TO A THICKNESS OF 2" AND CUT BY THE FABRICATOR TO LENGTHS AND WIDTHS SPECIFIED IN THE PLANS. RUBBER BLOCKS SHALL BE OZONE, WATER, AND TEMPERATURE RESISTANT, AND BONDED TO THE FACE OF ABUTMENT WITH A COMPATIBLE ADHESIVE IN ACCORDANCE WITH THE MANUFACTURER'S RECOMMENDATIONS.
16. THE EXPANSION JOINT ASSEMBLY SHALL BE INSTALLED ONLY AFTER THE APPROACH FILLS HAVE BEEN CONSTRUCTED TO THE BOTTOM OF THE APPROACH SLAB.
17. AFTER BOLT INSTALLATION, FILL COUNTERSUNK HOLES WITH ITEM 562.1, SILICONE JOINT SEALANT (F) (APPROX. 1 LF/HOLE).

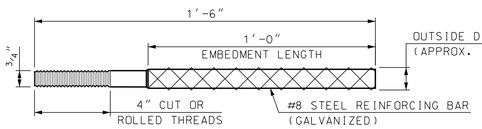

ANCHOR ROD DETAIL

(24 REQUIRED)
SCALE: NTS

TEMPERATURE ADJUSTMENT TABLE	
TEMPERATURE	"T"
15°F	10 1/4"
30°F	10 1/8"
45°F	10"
60°F	9 13/16"
75°F	9 11/16"
90°F	9 1/2"

TEMPERATURE ADJUSTMENT NOTES

1. "T" DIMENSIONS ARE PERPENDICULAR TO FACE OF BACKWALL.
2. VALUES IN THE TEMPERATURE ADJUSTMENT TABLE ARE FOR SETTING THE EXPANSION JOINT ASSEMBLY IMMEDIATELY PRIOR TO POURING THE DECK BLOCKOUT.

NOTE:
PROPOSED EXPANSION JOINT AND CONCRETE ARMORING TO BE SET TO ACCOMODATE 3/8" CHANGE IN FINISHED GRADE.

SAMPLE PLAN
DATE: 9-2020

SUBDIRECTORY	.DGN LOCATOR	SHEET SCALE
BRC\BETHLEHEM	42501 ABUT-AFingerJt	AS NOTED

STATE OF NEW HAMPSHIRE
DEPARTMENT OF TRANSPORTATION * BUREAU OF BRIDGE DESIGN

TOWN BETHLEHEM BRIDGE NO. 125/177 STATE PROJECT 42501
LOCATION US ROUTE 302 & NH ROUTE 10 over AMMONOOSUC RIVER

ABUT A FINGER EXP JT BR NO 125/177 (1 OF 5)

REVISIONS AFTER PROPOSAL		BY	DATE		BY	DATE
	DESIGNED	JEH	3/20	CHECKED	ABH	7/20
	DRAWN	GMC/SMG	3/20	CHECKED	ABH	7/20
	QUANTITIES	JEH	8/20	CHECKED	PML	8/20
	ISSUE DATE		FEDERAL PROJECT NO.		SHEET NO.	
	REV. DATE		----------		14	

BRIDGE SHEET 10 OF 34
FILE NUMBER 136-4-1
TOTAL SHEETS 38

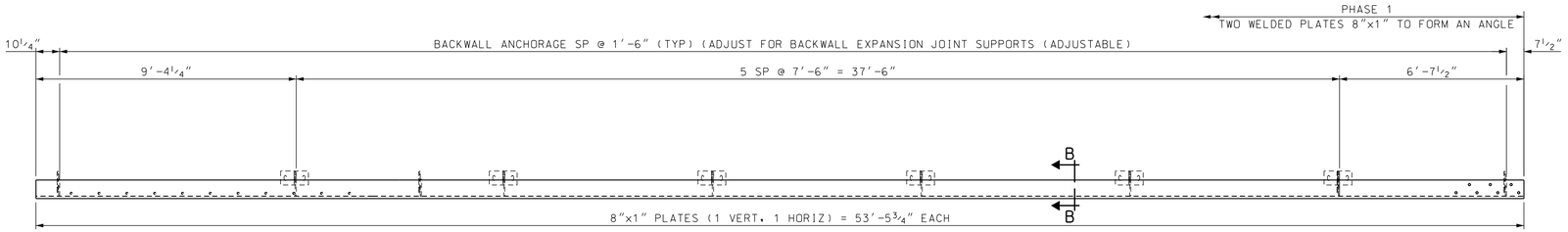

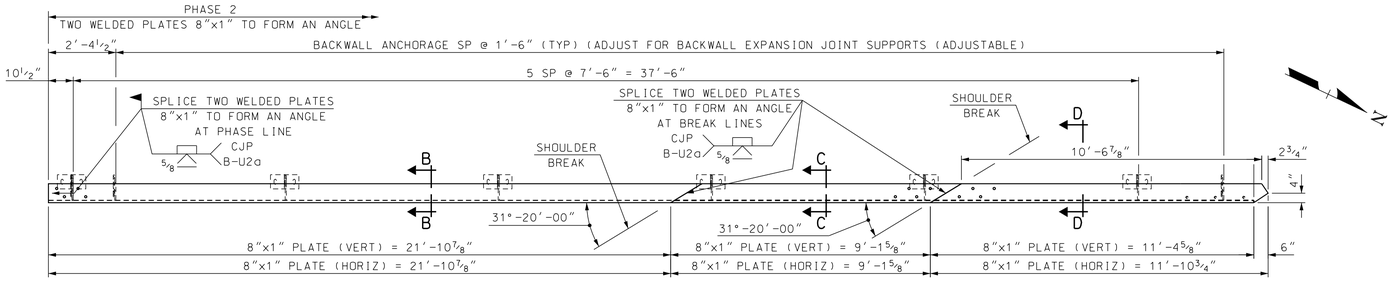

PLAN - BACKWALL ANCHORS AND JOINT SUPPORT ABUTMENT A

SCALE: 3/8" = 1'-0"
ALL DIMENSIONS GIVEN ARE HORIZONTAL

NOTE: DETAILS AND NOTES MAY NOT BE CURRENT. CLOSELY REVIEW BEFORE USING DETAILS.

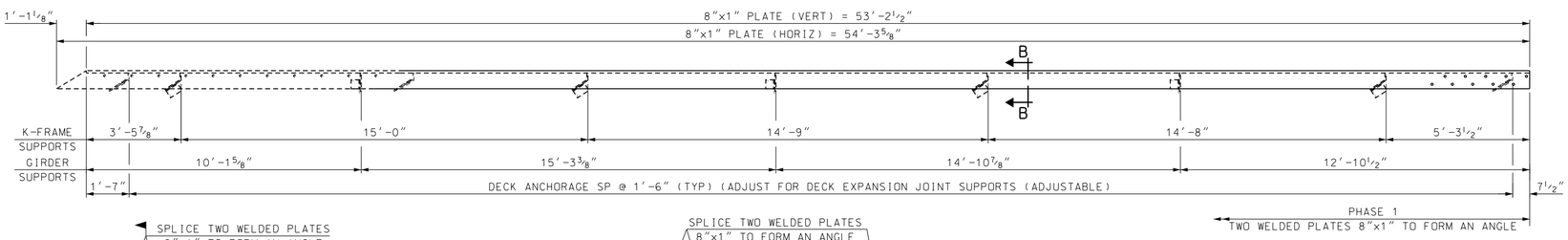

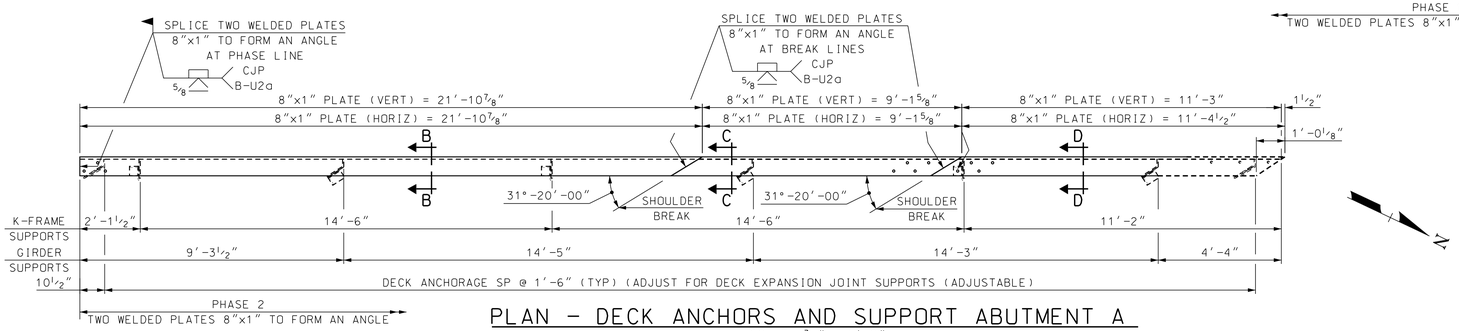

PLAN - DECK ANCHORS AND SUPPORT ABUTMENT A

SCALE: 3/8" = 1'-0"
ALL DIMENSIONS GIVEN ARE HORIZONTAL

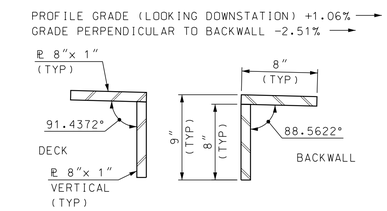

SECTION B-B

SCALE: 1 1/2" = 1'-0"

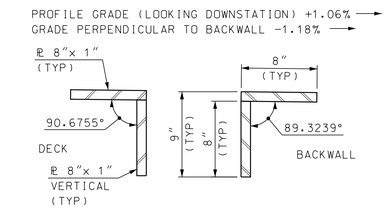

SECTION C-C

SCALE: 1 1/2" = 1'-0"

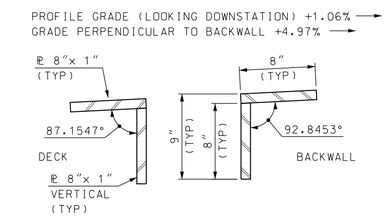

SECTION D-D

SCALE: 1 1/2" = 1'-0"

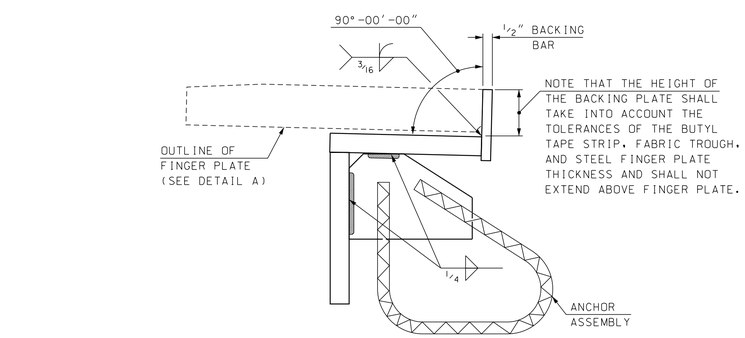

DETAIL B

SCALE: 3" = 1'-0"

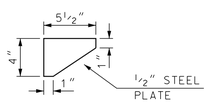

SIDEWALK SUPPORT PLATE

SCALE: 1 1/2" = 1'-0"

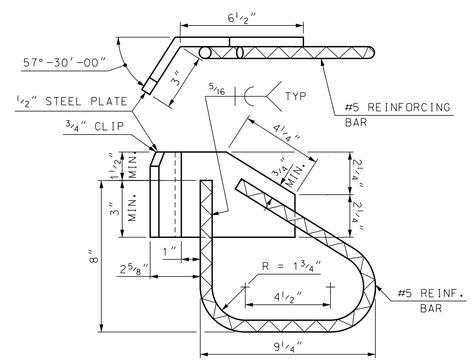

DECK ANCHORAGE DETAIL

SCALE: 3" = 1'-0"

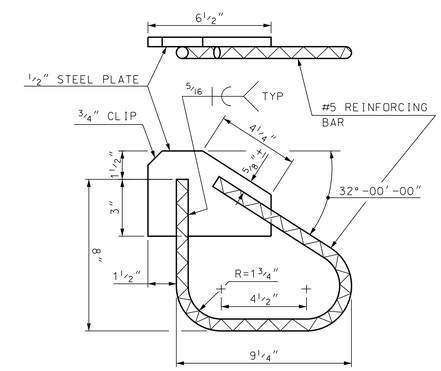

BACKWALL ANCHORAGE DETAIL

SCALE: 3" = 1'-0"

SAMPLE PLAN
DATE: 9-2020

STATE OF NEW HAMPSHIRE
DEPARTMENT OF TRANSPORTATION * BUREAU OF BRIDGE DESIGN

TOWN BETHLEHEM | BRIDGE NO. 125/177 | STATE PROJECT 42501
LOCATION US ROUTE 302 & NH ROUTE 10 over AMMONOOSUC RIVER

ABUT A FINGER EXP JT BR NO 125/177 (2 OF 5)

REVISIONS AFTER PROPOSAL		BY	DATE		BY	DATE
	DESIGNED	JEH	3/20	CHECKED	ABH	7/20
	DRAWN	GMC/SMG	3/20	CHECKED	ABH	7/20
	QUANTITIES	JEH	8/20	CHECKED	PML	8/20
	ISSUE DATE		FEDERAL PROJECT NO.		SHEET NO.	
	REV. DATE		----------		15	

BRIDGE SHEET 11 OF 34
FILE NUMBER 136-4-1
TOTAL SHEETS 38

SUBDIRECTORY	.DGN LOCATOR	SHEET SCALE
BRC\BETHLEHEM	42501 ABUT-AFingerJt	AS NOTED

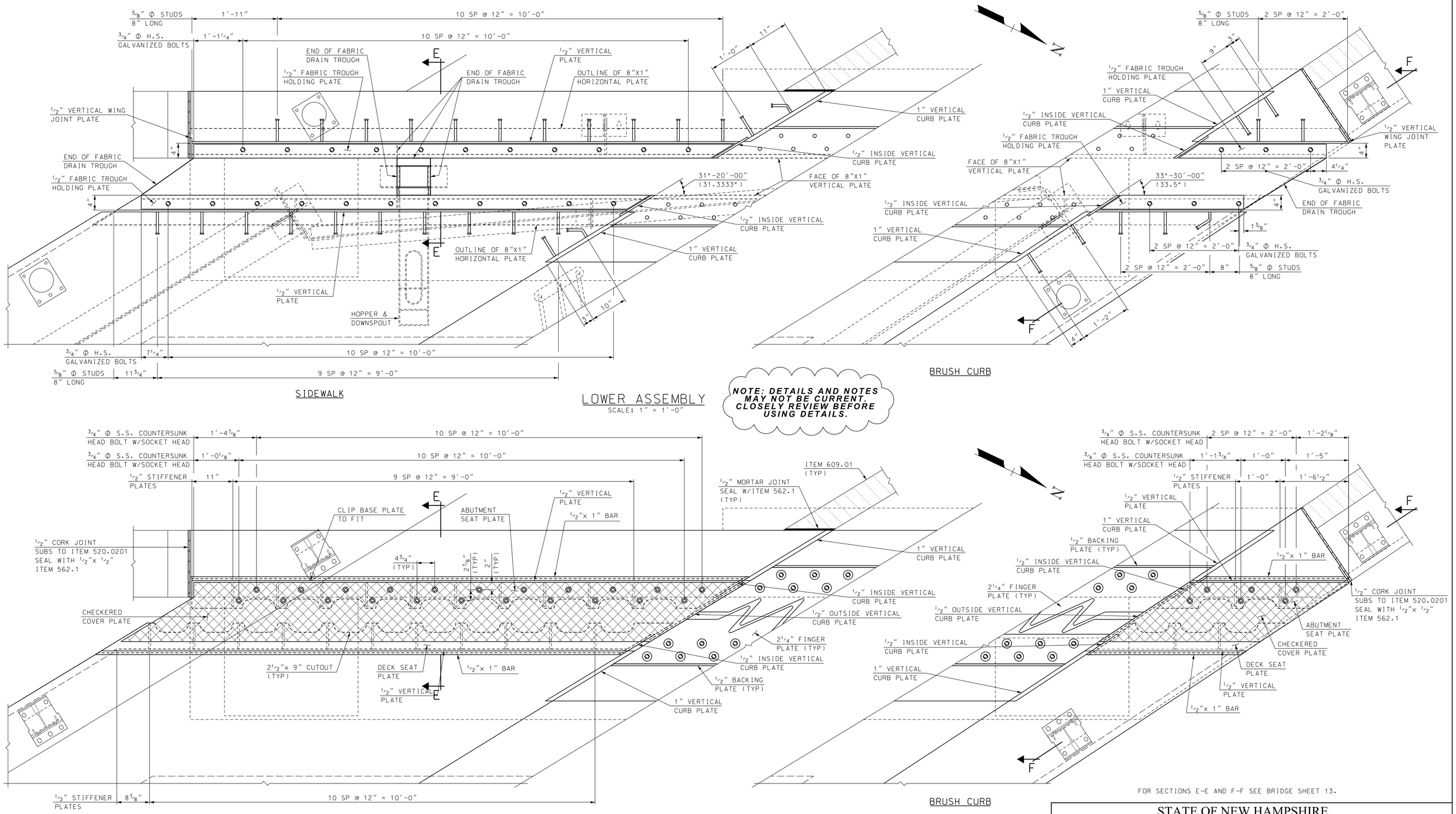

SAMPLE PLAN

DATE: 9-2020

SUBDIRECTORY	.DGN LOCATOR	SHEET SCALE
BRC\BETHLEHEM	42501 ABUT-AFingerJt	AS NOTED

STATE OF NEW HAMPSHIRE

DEPARTMENT OF TRANSPORTATION * BUREAU OF BRIDGE DESIGN

TOWN BETHLEHEM BRIDGE NO. 125/177 STATE PROJECT 42501

LOCATION US ROUTE 302 & NH ROUTE 10 over AMMONOOSUC RIVER

ABUT A FINGER EXP JT BR NO 125/177 (3 OF 5)

REVISIONS AFTER PROPOSAL

	BY	DATE		BY	DATE
DESIGNED	JEH	3/20	CHECKED	ABH	7/20
DRAWN	GMC/SMG	3/20	CHECKED	ABH	7/20
QUANTITIES	JEH	8/20	CHECKED	PML	8/20

ISSUE DATE	FEDERAL PROJECT NO.	SHEET NO.	TOTAL SHEETS
REV. DATE	----------	16	38

BRIDGE SHEET 12 OF 34

FILE NUMBER 136-4-1

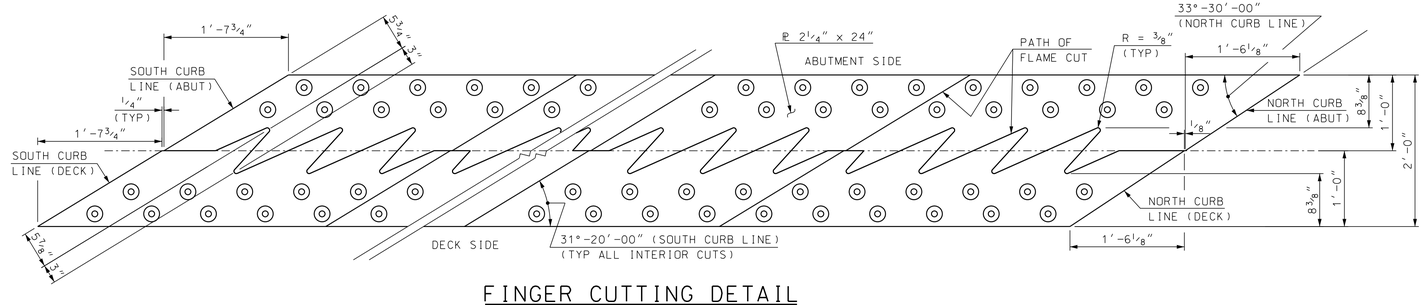

FINGER CUTTING DETAIL

SCALE: 1" = 1'-0"

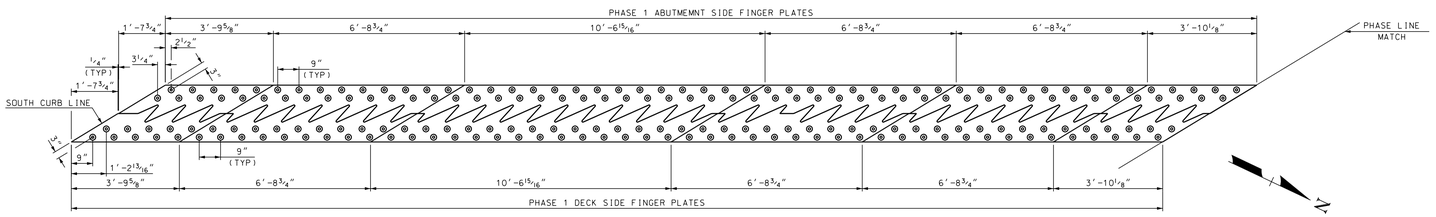

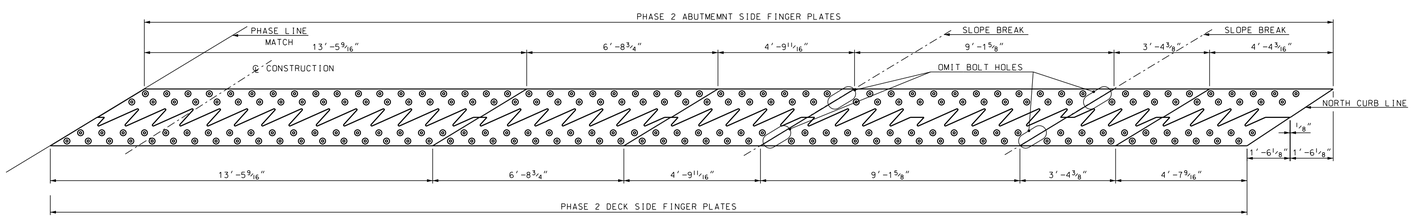

FINGER PLATE PLAN

SCALE: 1/2" = 1'-0"

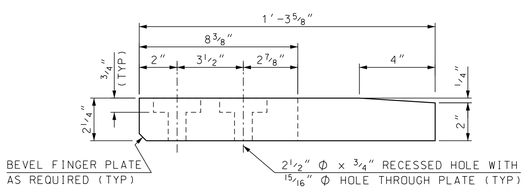

DETAIL A

SCALE: 3" = 1'-0"

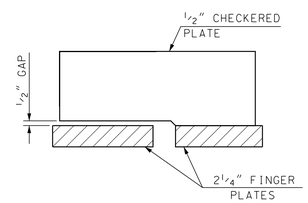

OUTSIDE VERTICAL CURB PLATE DETAIL

SCALE: 1 1/2" = 1'-0"

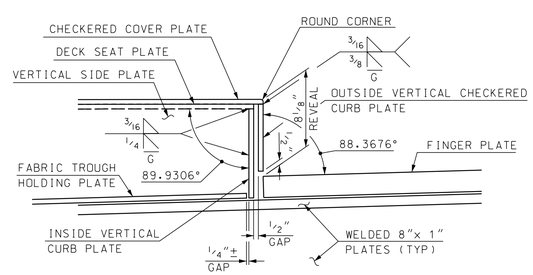

SIDEWALK CURB DETAIL

SCALE: 1 1/2" = 1'-0"

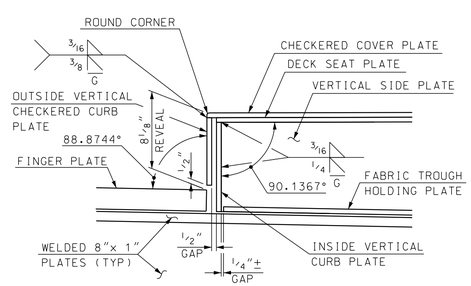

COPING CURB DETAIL

SCALE: 1 1/2" = 1'-0"

NOTE: DETAILS AND NOTES MAY NOT BE CURRENT. CLOSELY REVIEW BEFORE USING DETAILS.

SIDEWALK GRADE PERPENDICULAR TO BACKWALL +1.98% →
(LEVEL SECTION OF SIDEWALK GRADE = +0.55% →)

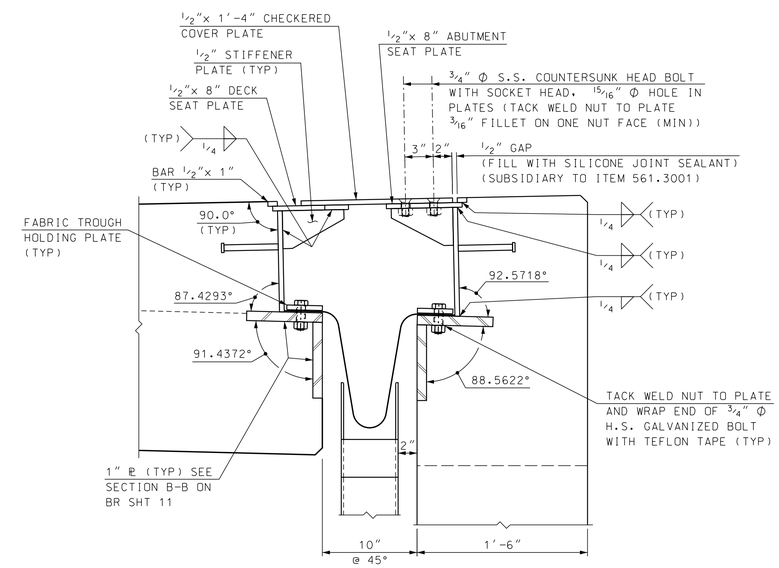

SECTION E-E

SCALE: 1 1/2" = 1'-0"

COPING GRADE PERPENDICULAR TO BACKWALL +0.59% →

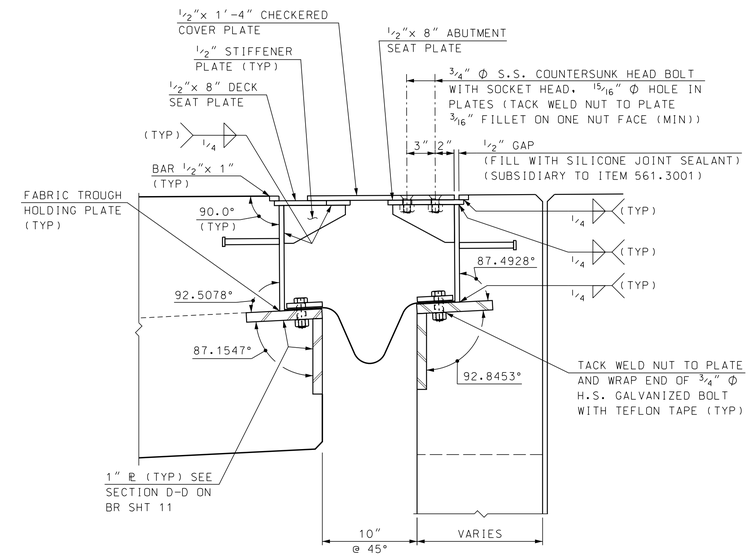

SECTION F-F

SCALE: 1 1/2" = 1'-0"

FOR LOCATIONS OF SECTIONS E-E AND F-F SEE BRIDGE SHEET 12.

SAMPLE PLAN

DATE: 9-2020

SUBDIRECTORY	.DGN LOCATOR	SHEET SCALE
BRC\BETHLEHEM	42501 ABUT-AFingerJt	AS NOTED

STATE OF NEW HAMPSHIRE
DEPARTMENT OF TRANSPORTATION * BUREAU OF BRIDGE DESIGN

TOWN BETHLEHEM BRIDGE NO. 125/177 STATE PROJECT 42501

LOCATION US ROUTE 302 & NH ROUTE 10 over AMMONOOSUC RIVER

ABUT A FINGER EXP JT BR NO 125/177 (4 OF 5)

REVISIONS AFTER PROPOSAL		BY	DATE		BY	DATE
	DESIGNED	JEH	3/20	CHECKED	ABH	7/20
	DRAWN	GMC/SMG	3/20	CHECKED	ABH	7/20
	QUANTITIES	JEH	8/20	CHECKED	PML	8/20
	ISSUE DATE		FEDERAL PROJECT NO.		SHEET NO.	
	REV. DATE		----------		17	

BRIDGE SHEET 13 OF 34

FILE NUMBER 136-4-1

TOTAL SHEETS 38

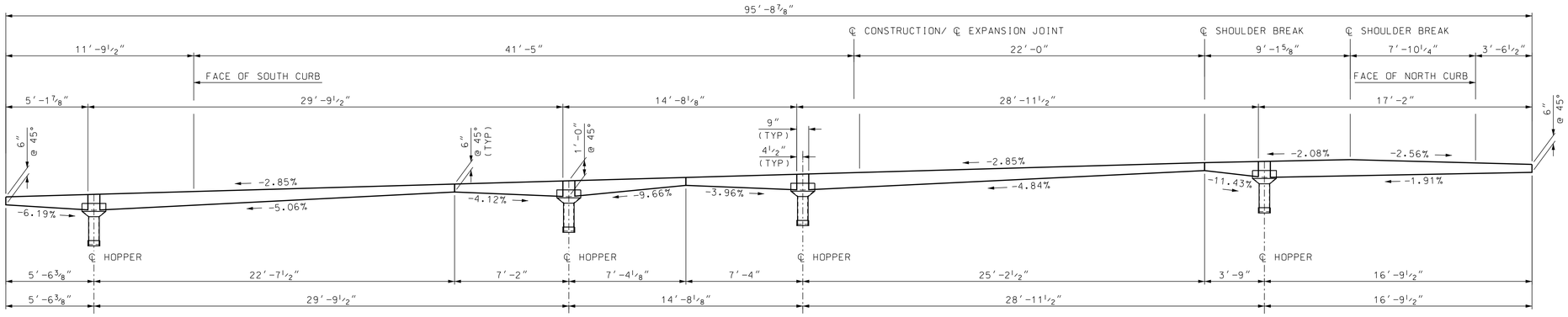

℄ FABRIC DRAIN TROUGH PROFILE @ 45°

SCALE: 1/4" = 1'-0"

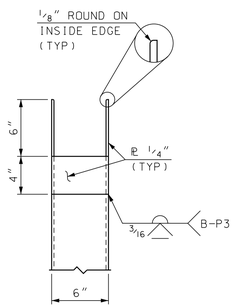

SIDE VIEW
2 WAY FLOW SHOWN
(1 WAY FLOW SIMILAR)

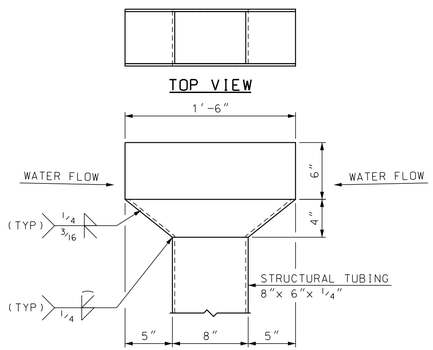

FRONT VIEW
2 WAY FLOW
(1 REQUIRED)

HOPPER DETAILS

SCALE: 1 1/2" = 1'-0"

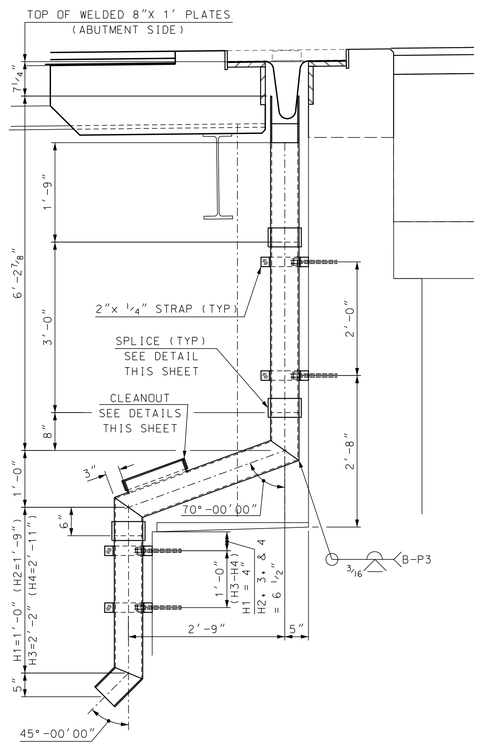

SECTION THRU ℄ OF HOPPER

SCALE: 3/4" = 1'-0"

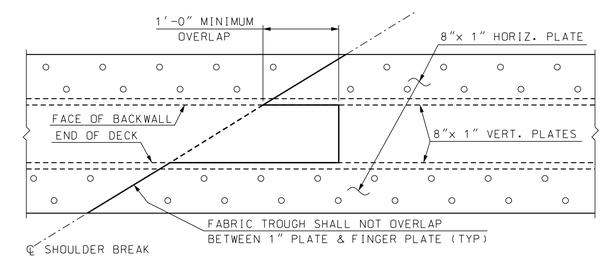

FABRIC TROUGH SPLICE

SCALE: 1" = 1'-0"

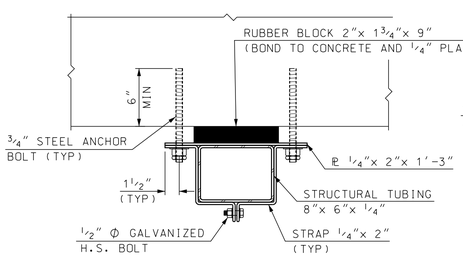

SECTION E-E

SCALE: 1 1/2" = 1'-0"

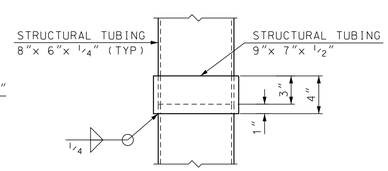

DOWNSPOUT SPLICE DETAIL

SCALE: 1 1/2" = 1'-0"

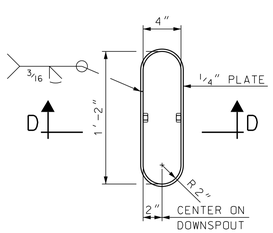

CLEANOUT DETAIL

SCALE: 1 1/2" = 1'-0"
(COVER REMOVED)

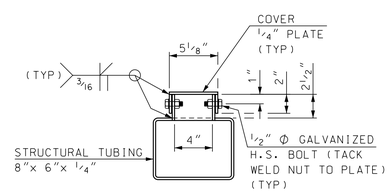

SECTION D-D

SCALE: 1 1/2" = 1'-0"

NOTE: DETAILS AND NOTES MAY NOT BE CURRENT. CLOSELY REVIEW BEFORE USING DETAILS.

SAMPLE PLAN
DATE: 9-2020

STATE OF NEW HAMPSHIRE
DEPARTMENT OF TRANSPORTATION * BUREAU OF BRIDGE DESIGN

TOWN BETHLEHEM BRIDGE NO. 125/177 STATE PROJECT 42501
LOCATION US ROUTE 302 & NH ROUTE 10 over AMMONOOSUC RIVER

ABUT A FINGER EXP JT BR NO 125/177 (5 OF 5)

BRIDGE SHEET 14 OF 34

REVISIONS AFTER PROPOSAL		BY	DATE		BY	DATE
	DESIGNED	JEH	3/20	CHECKED	ABH	7/20
	DRAWN	GMC/SMG	3/20	CHECKED	ABH	7/20
	QUANTITIES	JEH	8/20	CHECKED	PML	8/20

FILE NUMBER 136-4-1

SUBDIRECTORY	.DGN LOCATOR	SHEET SCALE
BRC\BETHLEHEM	42501 ABUT-AFingerJt	AS NOTED

ISSUE DATE
REV. DATE
FEDERAL PROJECT NO. ----------
SHEET NO. 18
TOTAL SHEETS 38