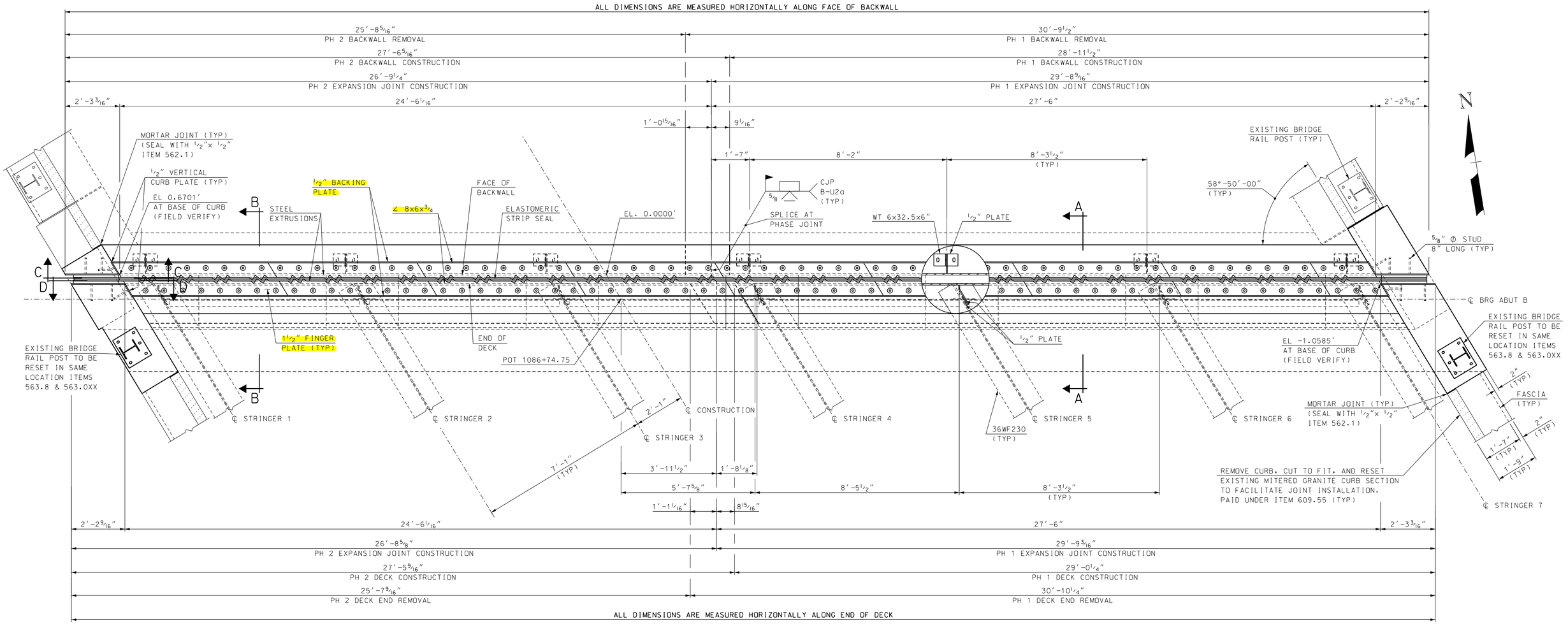

PLAN VIEW

SCALE: 1/2" = 1'-0"

EXPANSION JOINT NOTES

(1) ALL EXPANSION JOINT STEEL, INCLUDING ANCHORS, SHALL BE GALVANIZED. STEEL ANGLES SHALL BE ASTM A572 GRADE 50. MINOR STEEL PLATES MAY CONFORM TO ASTM A36. THE ENTIRE ASSEMBLY, INCLUDING STRIP SEAL, SHALL BE PAID FOR AS ITEM 561.1201, PREFABRICATED STRIP SEAL EXPANSION JOINT W/PLOW PLATES (F).

(2) SPLICES FOR STEEL ANGLES SHALL DEVELOP FULL STRENGTH.

(3) EXPANSION JOINT OPENING SHALL BE ADJUSTED TO TEMPERATURE ANTICIPATED JUST PRIOR TO POURING DECK BLOCKOUT. FINAL SETTING IN THE FIELD SHALL BE DETERMINED BY THE CONTRACT ADMINISTRATOR. SEE TEMPERATURE ADJUSTMENT TABLE & NOTES.

(4) STRIP SEAL SHALL BE FURNISHED IN ONE CONTINUOUS LENGTH. NO SPLICES WILL BE ALLOWED. SEAL SHALL BE INSTALLED IN THE FIELD BY THE CONTRACTOR, IN ACCORDANCE WITH THE MANUFACTURER OF THE SEAL, USING AN APPROVED TOOL THAT WILL NOT DAMAGE THE SEAL.

(5) JOINT SUPPORT PLATES AND CURB PLATES SHALL BE SHOP WELDED TO EXPANSION JOINT STEEL AND SHALL BE NORMAL TO GRADE AFTER JOINT ASSEMBLY HAS BEEN ADJUSTED FOR ROADWAY CROSS-SLOPE AND GRADE. STEEL ANGLES AND EXTRUSIONS SHALL BE ASSEMBLED WITH A CONSTANT JOINT OPENING TO ENSURE PROPER PERFORMANCE AND WATER TIGHTNESS.

(6) IMMEDIATELY AFTER THE JOINT HAS BEEN SECURED TO THE STRUCTURAL STEEL, REMOVE SHIPPING DEVICES AND GRIND SMOOTH ANY WELDS ON EXPOSED SURFACES. REPAIR ANY DAMAGE TO GALVANIZED SURFACES IN ACCORDANCE WITH SECTION 550.

(7) PROTECT TOP OF EXPANSION JOINT DURING PLACEMENT OF CONCRETE AND BITUMINOUS PAVEMENT.

(8) THE STRIP SEAL HAS BEEN DESIGNED FOR A TOTAL FACTORED MOVEMENT OF 1.05 INCHES. DESIGN INCLUDES MOVEMENT DUE TO TEMPERATURE, SKEW, SHRINKAGE AND MINIMUM INSTALLATION WIDTH. THE CONTRACTOR SHALL USE AN SE-400 SEAL BY WATSON BOWMAN OR A2R-400 BY D.S. BROWN, AS NOTED IN THE QPL.

(9) ELEVATIONS SHOWN AT TOP OF ANGLES ARE 1/8" LOWER THAN PROPOSED FINISHED ROADWAY GRADE.

(10) NO "LOW PROFILE" STEEL EXTRUSIONS SHALL BE ALLOWED. SEE QPL FOR APPROVED PRODUCTS.

(11) PRIOR TO INSTALLING THE SEAL, ALL TEMPORARY FORM WORK SHALL BE REMOVED. STEEL ANGLES AND EXTRUSIONS SHALL BE MAINTAINED FREE FROM DIRT, WATER AND ANY OTHER LOOSE DEBRIS, WITH THE USE OF COMPRESSED AIR, TO ENSURE PROPER FIT OF THE SEAL. CARE SHALL BE TAKEN NOT TO DAMAGE GALVANIZED SURFACES.

NOTE: DETAILS AND NOTES MAY NOT BE CURRENT. CLOSELY REVIEW BEFORE USING DETAILS.

NOTE:
PROPOSED EXPANSION JOINT AND CONCRETE ARMORING TO BE SET TO ACCOMODATE 1/2" CHANGE IN FINISHED GRADE IN PHASE 3 CONSTRUCTION (SEE BR SHT XX).

FOR SECTIONS A-A THROUGH D-D SEE BRIDGE SHEET XX.

SAMPLE PLAN

DATE: 05-2018

SUBDIRECTORY	.DGN LOCATOR	SHEET SCALE
5 NH Route 103 Warner	Plow Plate NB164-104 B	AS NOTED

STATE OF NEW HAMPHIRE
DEPARTMENT OF TRANSPORTATION * BUREAU OF BRIDGE DESIGN

TOWN WARNER BRIDGE NO. 164/104 STATE PROJECT XX

LOCATION I-89 NORTHBOUND over N.H. ROUTE 103 (INTERSTATE BR. #27)

ABUT B STRIP SEAL EXP JT W/PLOW PLATES (1 OF 3)

REVISIONS AFTER PROPOSAL		BY	DATE		BY	DATE
	DESIGNED	SMG	5/18	CHECKED	X	X
	DRAWN	SMG	5/18	CHECKED	X	X
	QUANTITIES	X	X	CHECKED	X	X
	ISSUE DATE		FEDERAL PROJECT NO.		SHEET NO.	
	REV. DATE		----------		1	

BRIDGE SHEET X OF XX

FILE NUMBER XX-X-X

TOTAL SHEETS 1

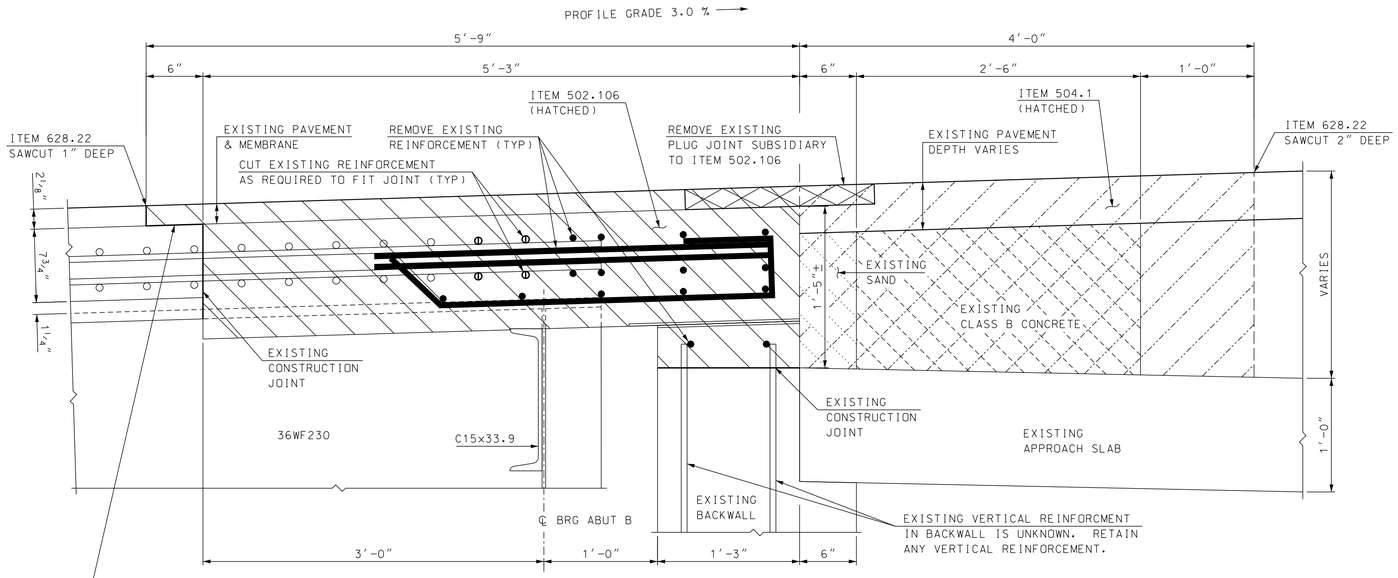

SECTION A-A REMOVAL

SCALE: 1 1/2" = 1'-0"

NOTE: DETAILS AND NOTES MAY NOT BE CURRENT. CLOSELY REVIEW BEFORE USING DETAILS.

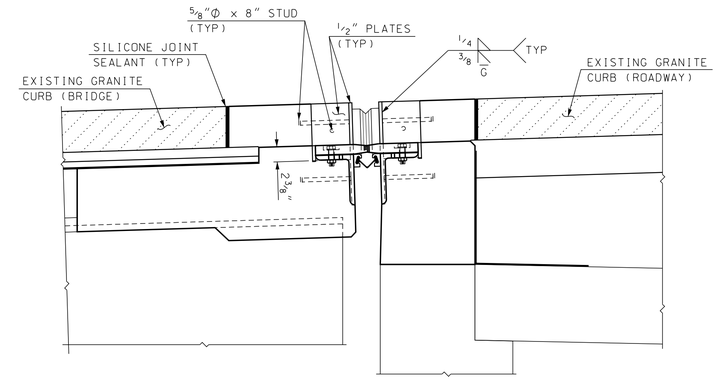

SECTION B-B

SCALE: 1" = 1'-0"

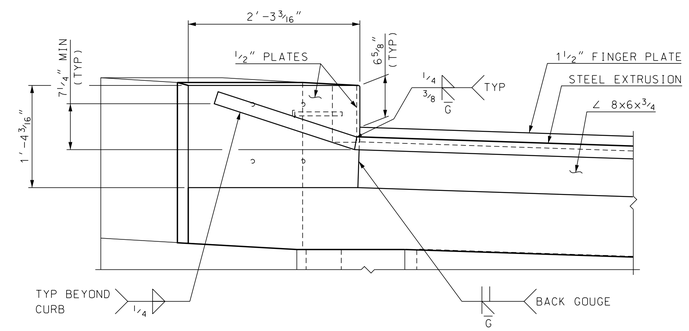

SECTION C-C

SCALE: 1" = 1'-0"

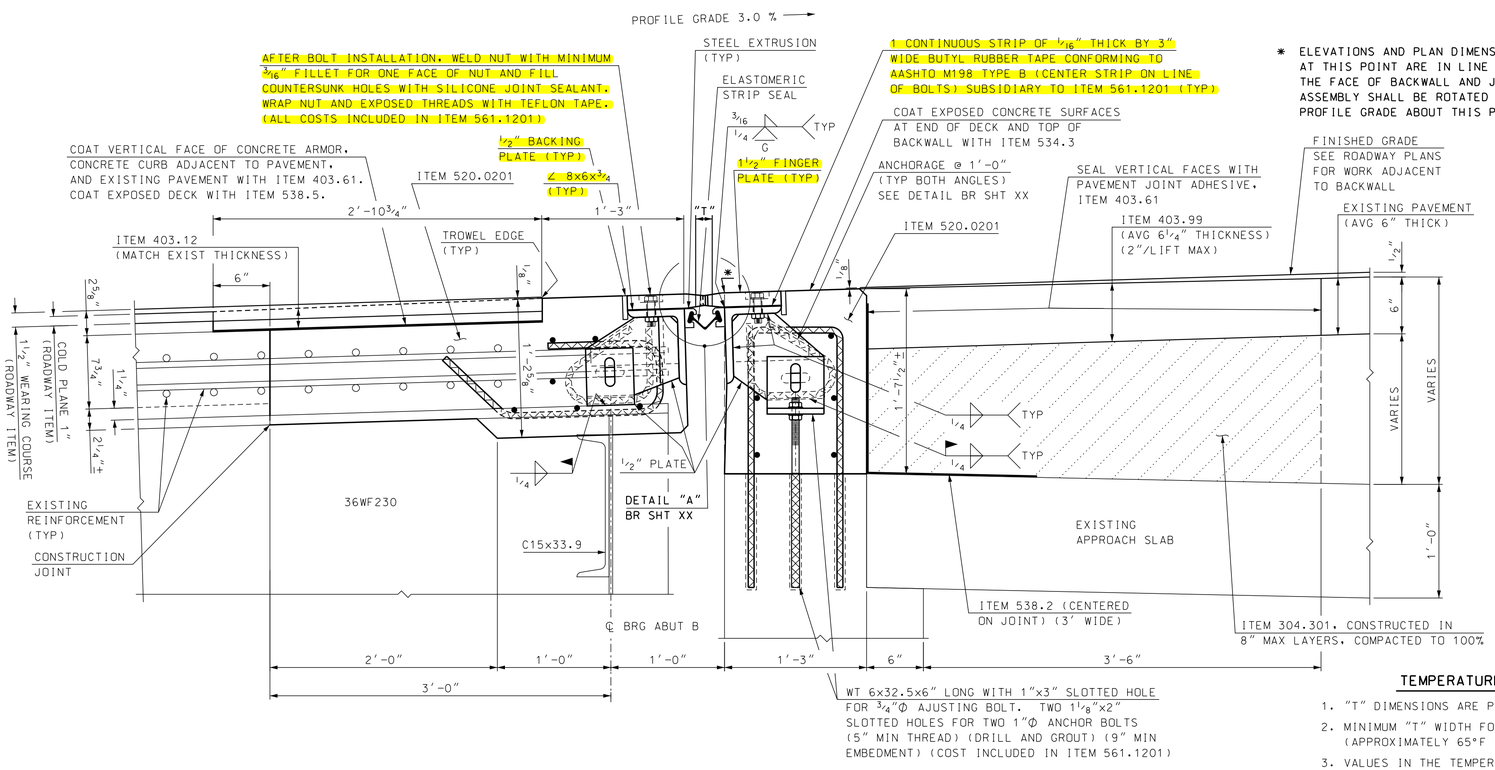

SECTION A-A CONSTRUCTION

SCALE: 1 1/2" = 1'-0"

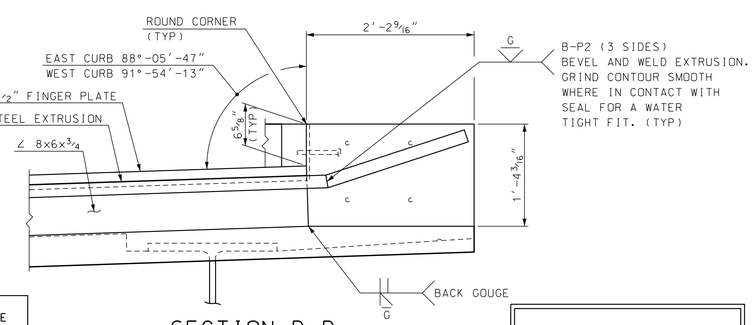

SECTION D-D

SCALE: 1" = 1'-0"

TEMPERATURE ADJUSTMENT TABLE ABUTMENT B	
TEMPERATURE	"T"
20°F	2"
35°F	1 15/16"
50°F	1 13/16"
65°F	1 3/4"
80°F	1 11/16"
95°F	1 9/16"

TEMPERATURE ADJUSTMENT NOTES

1. "T" DIMENSIONS ARE PERPENDICULAR TO FACE OF BACKWALL.
2. MINIMUM "T" WIDTH FOR SEAL INSTALLATION = 1 3/4" (APPROXIMATELY 65°F OR LESS).
3. VALUES IN THE TEMPERATURE ADJUSTMENT TABLE ARE FOR SETTING THE EXPANSION JOINT ASSEMBLY IMMEDIATELY PRIOR TO POURING CONCRETE BLOCKOUTS.

SAMPLE PLAN

DATE: 05-2018

FOR LOCATION OF SECTIONS A-A THROUGH D-D SEE BRIDGE SHEET XX.

STATE OF NEW HAMPSHIRE
DEPARTMENT OF TRANSPORTATION * BUREAU OF BRIDGE DESIGN

TOWN WARNER | BRIDGE NO. 164/104 | STATE PROJECT XX

LOCATION I-89 NORTHBOUND over N.H. ROUTE 103 (INTERSTATE BR. #27)

ABUT B STRIP SEAL EXP JT W/PLOW PLATES (2 OF 3)

REVISIONS AFTER PROPOSAL	BY	DATE		BY	DATE
DESIGNED	SMG	5/18	CHECKED	X	X
DRAWN	SMG	5/18	CHECKED	X	X
QUANTITIES	X	X	CHECKED	X	X

ISSUE DATE	FEDERAL PROJECT NO.	SHEET NO.	TOTAL SHEETS
REV. DATE	----------	1	1

BRIDGE SHEET X OF XX

FILE NUMBER XX-X-X

SUBDIRECTORY	.DGN LOCATOR	SHEET SCALE
5 NH Route 103 Warner	Plow Plate NB164-104 B	AS NOTED

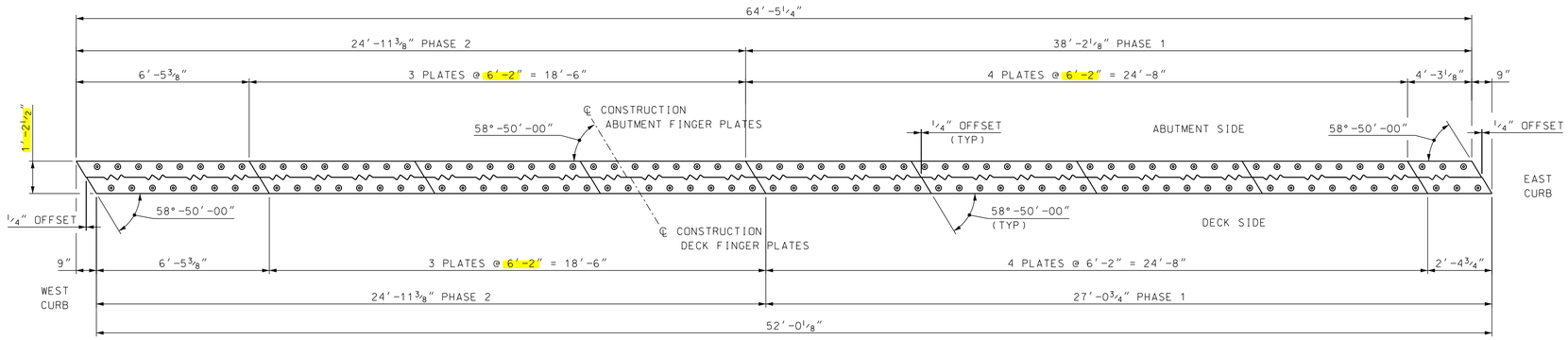

ALL DIMENSIONS ARE HORIZONTAL

ABUTMENT B FINGER PLATE PLAN

SCALE: 3/8" = 1'-0"

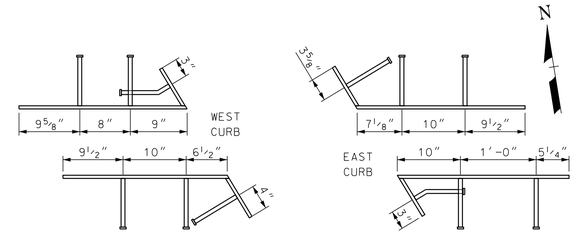

STUD LAYOUT

SCALE: 1" = 1'-0"

NOTE: DETAILS AND NOTES MAY NOT BE CURRENT. CLOSELY REVIEW BEFORE USING DETAILS.

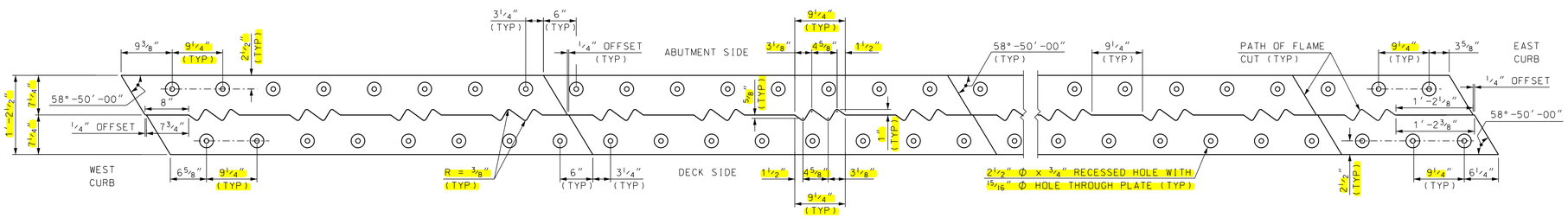

ABUTMENT B FINGER CUTTING DETAIL

SCALE: 1" = 1'-0"

SAMPLE PLAN

DATE: 05-2018

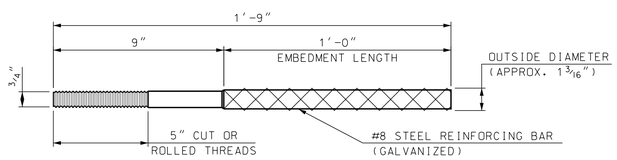

ANCHOR ROD DETAIL

(14 REQUIRED)
SCALE: NTS

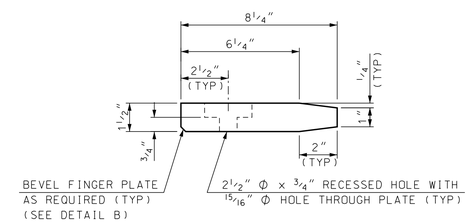

DETAIL "A"

SCALE: 3" = 1'-0"

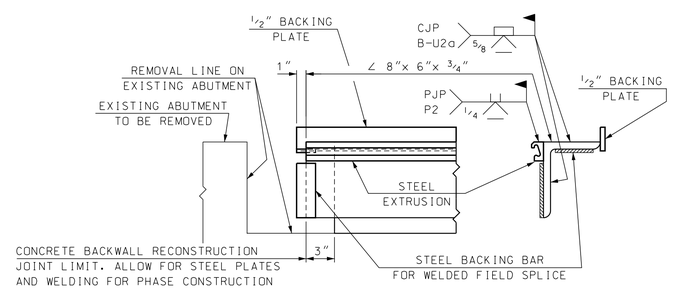

PHASE CONSTRUCTION - SPLICE DETAILS

N.T.S.

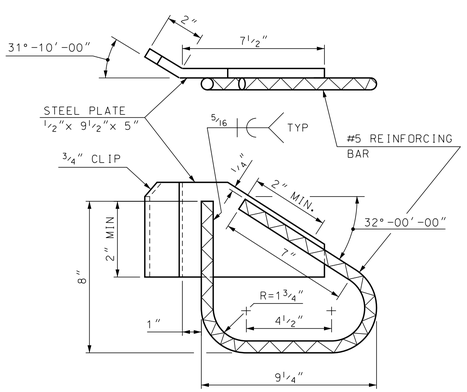

DECK ANCHORAGE DETAIL

SCALE: 3" = 1'-0"

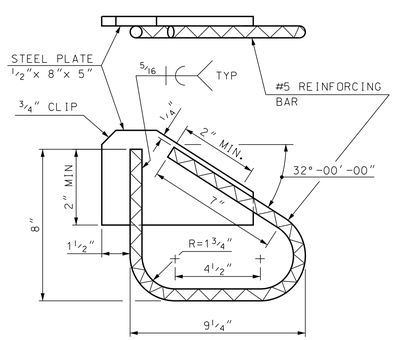

STUBWALL ANCHORAGE DETAIL

SCALE: 3" = 1'-0"

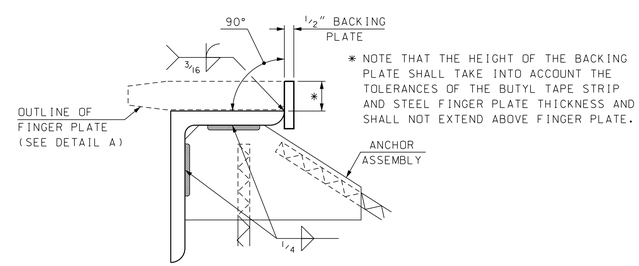

* NOTE THAT THE HEIGHT OF THE BACKING PLATE SHALL TAKE INTO ACCOUNT THE TOLERANCES OF THE BUTYL TAPE STRIP AND STEEL FINGER PLATE THICKNESS AND SHALL NOT EXTEND ABOVE FINGER PLATE.

DETAIL "B"

SCALE: 3" = 1'-0"

STATE OF NEW HAMPSHIRE
DEPARTMENT OF TRANSPORTATION * BUREAU OF BRIDGE DESIGN

TOWN WARNER | BRIDGE NO. 164/104 | STATE PROJECT XX

LOCATION I-89 NORTHBOUND over N.H. ROUTE 103 (INTERSTATE BR. #27)

ABUT B STRIP SEAL EXP JT W/PLOW PLATES (3 OF 3)

REVISIONS AFTER PROPOSAL		BY	DATE		BY	DATE
	DESIGNED	SMG	5/18	CHECKED	X	X
	DRAWN	SMG	5/18	CHECKED	X	X
	QUANTITIES	X	X	CHECKED	X	X

SUBDIRECTORY	.DGN LOCATOR	SHEET SCALE
5 NH Route 103 Warner Plow Plate NB164-104 B		AS NOTED

ISSUE DATE	FEDERAL PROJECT NO.	SHEET NO.	TOTAL SHEETS
REV. DATE	----------	1	1

BRIDGE SHEET: X OF XX

FILE NUMBER: XX-X-X