New Hampshire DOT
Department of Transportation

Bridge Design Manual

Chapter 11

Preparation of Plans

January 2015 – v 2.0

(Revised June 2020)

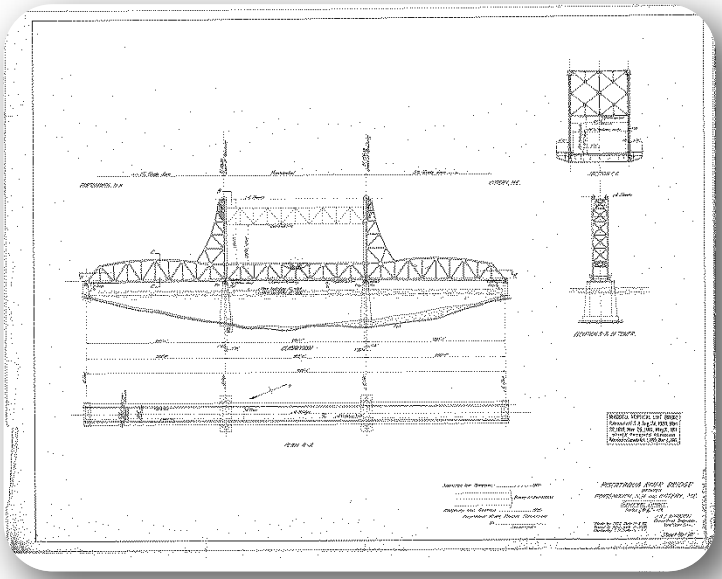

Page intentionally left blank.

Chapter 11 Preparation of Plans

11.1	**General**	11.1-1
11.2	**Graphic Guidelines**	11.2-1
11.2.1	Line Styles	11.2-1
11.2.2	Character Styles	11.2-1
11.2.3	Dimensioning	11.2-2
11.2.4	Graphic Symbols	11.2-2
11.2.5	Abbreviations	11.2-2
11.2.6	Sheet Layout	11.2-3
11.2.7	Scale	11.2-3
11.2.8	Title Block	11.2-3
11.2.9	Revisions	11.2-4
11.2.10	Miscellaneous	11.2-4
11.3	**Plans for Public Meetings**	11.3-1
11.3.1	General	11.3-1
11.4	**Sequence of Drawings**	11.4-1
11.4.1	General	11.4-1
11.5	**Quantities**	11.5-1
11.5.1	General	11.5-1
11.5.2	Procedure for Computation	11.5-1
11.5.3	Accuracy	11.5-2
11.5.4	Cost Estimating Quantities	11.5-3
11.6	**Concrete Drawings**	11.6-1
11.6.1	General	11.6-1
11.7	**Structural Steel Drawings**	11.7-1
11.7.1	General	11.7-1
11.8	**Bridge Rehabilitation Drawings**	11.8-1
11.8.1	General	11.8-1
11.9	**Bridge Detail Sheets, Bridge Details, and Sample Plans & Notes**	11.9-1
11.9.1	Bridge Detail Sheets	11.9-1
11.9.2	Bridge Details	11.9-1
11.9.3	Sample Plans & Notes	11.9-1
References		11.R-1
Appendix A		
Appendix 11.2-A1	Dimensioning Examples	11.2-A1-1
Appendix 11.2-A2	Hatching Examples	11.2-A2-1
Appendix 11.2-A3	Abbreviations	11.2-A3-1
Appendix 11.2-A4	Drawing Scales	11.2-A4-1
Appendix 11.3-A1	Color Legend	11.3-A1-1

Appendix 11.5-A1	Quantity Calculation Sheets	11.5-A1-1
Appendix 11.5-A2	Accuracy of Bridge Quantities	11.5-A1-1
Appendix 11.5-A3	Example of Bridge Excavation Limits	11.5-A3-1
Appendix 11.5-A4	Changes in Item No., Description or Method of Payment	11.5-A4-1
Appendix 11.9-A1	List of Bridge Drawings	11.9-A1-1
Appendix 11.9-A2	Bridge Design Final Plan Checklist	11.9-A4-1
Appendix 11.9-A3	Bridge Design Constructability Checklist	11.9-A5-1
Appendix B		
Appendix 11.2-B1	Survey Layout Sample Plan	11.2-B1-1
Appendix C		
Appendix 11-C1	Edmund Gunter Measuring Devices	11-C1-1

Chapter 11 Preparation of Plans

11.1 General

The efforts of the Department are judged to a great extent by the clarity, neatness, and accuracy of its Contract Plans. It is the intent of the Department to require that all drawings meet the NHDOT standards which will produce clear, consistent, and effective plan sheets that have uniform appearance and information.

Designers and drafters are responsible for ensuring that these standards are implemented. The designer and the drafter together coordinate the scope of the detailing work involved in each project. Time needs to be allotted for checking plans for accuracy and consistency with the Bureau's practice. Any deviation from these standards must be approved by the Bridge Design Administrator.

Similar bridge plans and details should be reviewed and kept as examples for maintaining consistent detailing practices for future projects. These examples should not be older than three years.

The current NHDOT CAD/D graphic practices, detailing, and method of electronic submissions are documented in the *NHDOT CAD/D Procedures and Requirements Manual* located at http://www.nh.gov/dot/cadd/microstation/index.htm.

Page intentionally left blank.

11.2 Graphic Guidelines

11.2.1 Line Styles

- All line styles shall follow the *NHDOT CAD/D Procedures and Requirements*.
- Dimension lines and grade elevations shall be placed to avoid the lines of the drawings/details as practicable.
- Intersecting dimension lines, extension lines, and leaders shall be broken.
- Callout arrows are placed under the first line or at the beginning or the end of the sentence and come off left or right.
- Place leader lines from notes between line one and two or at the beginning or end of the note blocks.
- Line styles shall be chosen so that the primary subject of the drawing is in a bold line style. [Example: Reinforcing Detail; the reinforcing bar shall be shown in a bold line style (MicroStation line weight of 3) and the masonry shall be shown in a lighter line style (MicroStation line weight of 1). See *NHDOT CAD/D Procedures and Requirements*].

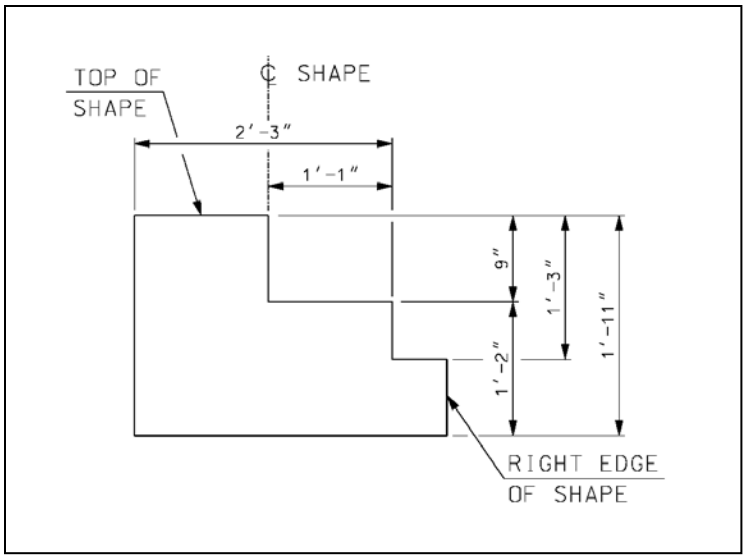

Line Precedence Diagram

Figure 11.2.1-1

11.2.2 Character Styles

- All character styles (note and detail text, title text, sub-title text) shall be in accordance with the *NHDOT CAD/D Procedures and Requirements*.
- Lettering shall be in upper case.
- Text shall be oriented so as to be read from the bottom or right edge of the sheet.

11.2.3 Dimensioning

- All dimensioning shall be in accordance with the *NHDOT CAD/D Procedures and Requirements*.
- A dimension shall be shown once on a drawing. Duplication and unnecessary dimensions shall be avoided.
- All dimension figures shall be placed above the dimension line, such that they may be read from the bottom or the right edge of the sheet.
- Reinforcing bar clear cover need not be specified on the plans unless different from the "General Notes".
- When details or structural elements are complex, utilize two details or drawings: one for dimensioning the structure and the other for reinforcing bar details.
- Dimensions that are 12 inches or more shall be displayed in feet and inches unless the item dimensioned is conventionally designated in inches (e.g., 18" pipe).
- Dimensions larger than 10 meters shall be shown in meters, otherwise use millimeters.
- Dimensions that are less than one inch over an even foot, the fraction shall be preceded by a zero (e.g., 3'-0 ¾").
- Place dimensions outside the view. Examples of dimensioning placement are shown in Appendix 11.2-A1.

11.2.4 Graphic Symbols

- Graphic symbols shall be in accordance with the following:
  - The *NHDOT CAD/D Procedures and Requirements Standard Cell Library*
  - Structural steel shapes: See *AISC Manual of Steel Construction*.
  - Welding Symbols: See American Welding Society (AWS)
  - Hatching: See Appendix 11.2-A2 for examples.

11.2.5 Abbreviations

- Abbreviations shall only be used if the use aids the flow of the sheet.
- Abbreviations shall *not* be used in the text of notes unless they are conventional abbreviations, such as mm (millimeters) or HS bolt (high strength bolt).
- Because different words sometimes have identical abbreviations, words shall be spelled out where the meaning may be in doubt.
- A period shall be placed after abbreviations, except as listed in Appendix 11.2-A3.
- Apostrophes are usually not used. Exceptions: pav't and req'd
- Abbreviations for plurals are usually the same as the singular.
- Abbreviations in titles shall be avoided.
- See Appendix 11.2-A3 for a list of abbreviations commonly used on bridge plan sheets.

11.2.6 Sheet Layout

- The standard bridge sheet format is 34 inches (864-mm) x 22 inches (559-mm) with the NHDOT Bridge Design border.
- Do not repeat typical features. Use "TYP" designations as much as practicable.
- Details, enlargements, and blowups shall be oriented the same as the original.
- North arrow shall be placed on all plan views.
- Related details shall be grouped together in an orderly arrangement (i.e., align details horizontally and vertically and draw to the same scale, if possible. An exception is an enlarged detail).
- Do not crowd the plan sheet with details.
- Layout the plan and profiles with stations increasing from left to right.
- The layout of the abutment and pier/bent bearings shall begin with Abutment A and increase as the stationing increases from left to right.
- The layout of the working points for the abutments and pier(s)/bent(s) shall be oriented so that they increase from left to right as the structure is being faced. See Appendix 11.2–B1 for a survey layout sample. Working points for pier(s)/bent(s) shall be numbered consecutively beginning from the highest numbered working point at Abutment A.
- The layout of superstructure beams/girders shall begin with G #1 and increase from left to right on the Typical Deck Section, looking upstation.

11.2.7 Scale

- When selecting a scale, whether SI units or Metric, keep in mind that the drawing will be reduced to a half scale. The full size scale must be compatible with a usable scale on a half-size drawing (See Appendix 11.2-A4 for drawing scales).
- Generally, the minimum scale for a section detail with reinforcement is 1/4" = 1'-0".
- The minimum metric scale shall be at least 1:50.
- Care shall be taken that all structural elements are accurately drawn to scale.
- The contract plan sheets are not to be used for measurements in the field. They shall be drawn using scales that can be found on a standard architectural or engineering scale.
- Sections and views may be enlarged to show more detail, but the number of different scales used shall be kept to a minimum.
- Verify legibility when the drawings are reproduced to an 11x17-in. (279x432-mm) print.

11.2.8 Title Block

- The Bridge Design title block is part of the Bridge Design Border for the plan sheet and is a graphic cell file as shown in the *NHDOT CAD/D Procedures and Requirements*.
- The title block consists of town name(s), bridge number(s), state project number, location(s), plan sheet title, bridge sheet number, total bridge sheet number, plan sheet

number, total plan sheet number, file number, federal project number, and initials of designer, checker, and drafter.

- The title text style used shall follow the guidelines in the *NHDOT CAD/D Procedures and Requirements*.
- The project information in the title block shall be written the same as that listed in the project database through the Bureau of Planning and Community Assistance.

11.2.9 Revisions

- Revisions made to the contract plans (electronic and paper) shall be made as noted in Chapter 1, Section 1.3.5, Contract Plan Changes (Revisions After Proposal & As-Builts).

11.2.10 Miscellaneous

- Do not detail a bridge element in more than one location. If the element is changed there is a danger that only one of the details is updated.
- Centerline callouts shall be normal to the line itself.
- Show dead load camber, and dead load and live load deflections to the nearest 1/16-in. (2-mm).
- Do not provide a plan showing the location of construction signs (permanent or temporary). Only provide a table stating the description and quantity. If the project has a detour, then a plan showing the location of the signs is required, along with a table indicating the description and quantity.
- The skew angle is angle measured from the CL of bearing to a line perpendicular to the CL of construction. See Figure 11.2.10-1.
- The angle of crossing is the angle measured from the CL of construction to the CL of bearing or from the CL of construction to the CL of the road below.

Skew Angle

Figure 11.2.10-1

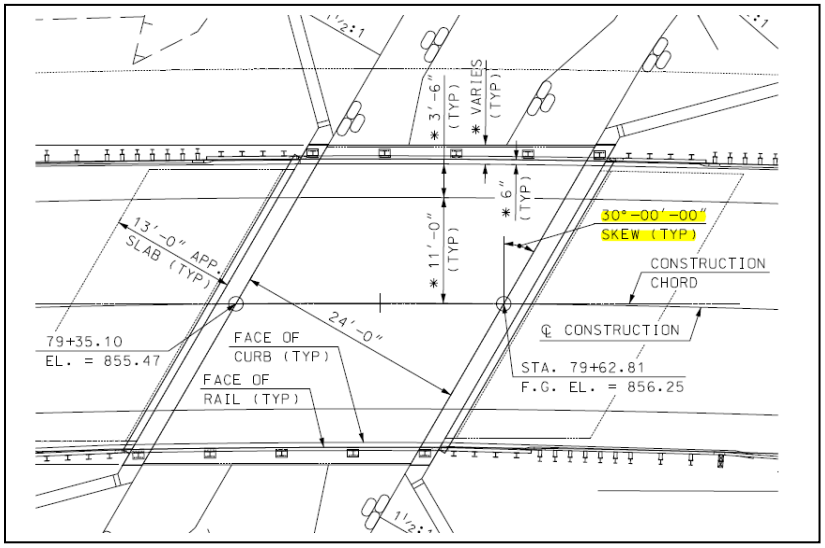

11.3 Plans for Public Meetings

11.3.1 General

- Plans for Public Informational/Officials Meetings and Public Hearings shall be developed and drafted in accordance with NHDOT standards, and the Project Manager and/or Senior Project Engineer's guidance.
- The public meeting base plan typically includes the existing survey detail, existing and proposed right-of-way information, proposed alignment and work, and shall be colored according to the NHDOT Legend as shown in the *Highway Design Manual, Chapter 2, Appendix 2-10* (See Appendix 11.3-A1 for the color legend).
- The scale for a public meeting base plan can vary depending on the length of the project. A bridge-only project base plan typically uses a 1" = 20' (1:250 metric) scale. A base plan that includes highway work typically uses a 1" = 50' (1:500 metric) scale.
- As an alternative to the base plan or as an additional plan, the public meeting base plan can use aerial photography with the proposed work shown on it.
- The profile is typically drawn with a 1v:1h ratio for bridge projects with a small amount of approach work.
- The profile is typically drawn with an exaggerated scale for a project with a large amount of roadway work. The horizontal scale matches the base plan scale and the vertical scale shall be 1:5 (e.g., 1"= 20' H, 1"= 4'V or 1:50 H, 1:10 V).
- If a bridge deck cross section or elevation view has been drafted, it can be brought to the public meeting for informational purposes, if approved by the Project Manager or Senior Engineer.
- All plans used for public meetings shall be filed in either the Bureaus of Highway Design or Bridge Design, and kept as an official public record.
- See Chapter 1, Section 1.2.4 for information regarding public meeting procedures and Appendix 1.2-A2 (S:\Bridge-Design\FORMS\PROJECT\Project Presentation Outline.doc) for a sample outline of items to be addressed at presentations.

Page intentionally left blank.

11.4 Sequence of Drawings

11.4.1 General

Plan sheets shall be assembled in the order of construction and include the items listed below. Phasing or large-scale projects may require more than one sheet to properly detail plan items.

Sample bridge plans are located at:
http://www.nh.gov/dot/org/projectdevelopment/bridgedesign/sampleplans/index.htm

The sequence of drawings in a project shall be as follows:

1. General Plan & Elevation (Summary of Quantities)
2. Note Sheet *(alternately Summary of Quantities can be placed here)*
3. Site Plan & Profile (Survey Layout)
4. Channel Sections *(Survey Layout can also be placed here)*
5. Construction Access and Grading Plan
6. Boring Layout and Boring Logs
7. Footing A Masonry (Plan & Sections)
8. Footing A Reinforcement
9. Abutment A Masonry (Plan, Elevation, Section & Excavation Limits)
10. Abutment A Reinforcement
11. Wingwall Masonry (Plan, Elevation, Section & Excavation Limits)
12. Wingwall Reinforcement
13. (Repeat sequence of sheets 7-12 for Abutment B sheets)
14. Pier Masonry (Footing Plan, Pier Elevation, Sections, etc.)
15. Pier Reinforcement
16. Bridge Bearings
17. Superstructure Framing Plan, Details
18. Typical Deck Section, Details
19. Deck Reinforcement
20. Deck Panels
21. Approach Slabs
22. Expansion Joint Details
23. Rail & Curb Layout
24. Bridge Rail
25. Bridge Approach Rail
26. Lighting
27. Concrete Barrier
28. Reinforcing Schedules

Page intentionally left blank.

11.5 Quantities

11.5.1 General

The quantities of the various materials and work items involved in the construction of a project that includes bridges and structures are needed for establishing the estimated cost of the project throughout the design process, and for establishing a basis for comparison of the Contractor's bids.

- A summary of Bridge Quantities shall be placed on the General Plan and Elevation Sheet or on the Notes Sheet.
- Intermediate summaries shall not be included in the contract plans (e.g., abutment quantities, superstructure quantities, etc.). However, quantity calculation sheets shall include intermediate quantity summaries.
- Roadway quantities will need to be included if the project is initiated by the Bureau of Bridge Design and approach work is part of the project. The roadway quantities shall be placed on Highway Design Quantity Plan Sheets.
- References for the computation of quantities include *Highway Design Manual*, *Chapter 8* and *NHDOT Standard Specifications for Road & Bridge Construction*. Also, the Special Attentions, Special Provisions, Special Details, and Supplemental Specifications shall be reviewed for various application rates, constants, appropriate item numbers, and the intent of the work to be performed.

11.5.2 Procedure for Computation

Quantities are to be computed and checked independently. Both individuals (designer and checker) are responsible for the accuracy of the quantities. The designer and checker shall use identical breakdown of quantities for different components in the item. For example, the designer's quantities for excavation for each of Piers 1, 2, and 3 should be compared separately against the corresponding quantities made by the checker. The designer and checker shall compare the total quantity of each item within the percent accuracy listed in the table in Appendix 11.5-A2. If the final quantity between the checker and the designer is within the percent accuracy, the calculations of the higher value shall be included in the quantity calculations for all the items. If the designer and checker are not within the percent accuracy shown on the table in Appendix 11.5-A2, they shall discuss and recalculate until an agreed quantity is reached.

Keep the quantity calculations as simple, organized, clear, and neat as possible. It is helpful to write down formulas, define variables, and *always* include the units. This will avoid confusion, minimize errors in calculation, and make it easier for construction personnel to follow the calculations.

- All quantity calculation sheets and Quantity Summary Table(s) shall match the quantities for the contract estimate. All calculations sheets and the Quantity Summary Tables(s) are to be filed in the project file.
- Calculations for Final Pay items shall be posted electronically on the website so that Contractors can review them prior to bidding. The final value shown on the calculations for the Final Pay items needs to match the Quantity Summary Table. A .pdf file of all the Final Pay item calculations shall be sent to the Specifications Office for placement on the

website, and also stored in the electronic project file, S:\Projects\Active\(Town)\(Project No.)\Final Pay Quantities.

- Two copies of the quantity calculations shall be given to the Construction Bureau upon award of the project.
- Any subsequent revisions shall be handled in the same manner as the original quantities. On the "Bridge Calculation Sheet," any revision to the original figure shall not be erased but crossed out and replaced by the new figure using a different colored pencil. If there are too many revisions, the old summary sheet shall be marked superseded and left in the file and a new sheet prepared, marked "Revised," dated, and placed in the project file. Any quantity revision after the project has been advertised shall be revised on the plans in accordance with Chapter 1, Section 1.3.5 Contract Plan Changes (Revisions After Proposal & As-Builts).
- A NHDOT Bridge Design quantity calculation sheet can be found at: S:\FORMS\PROJECT\Quantity Calc Sheet.xls. (See Appendix 11.5-A1 for a Sample Quantity Calculation Sheet)
- Examples of bridge excavation limits are shown on Appendix 11.5-A3.

11.5.3 Accuracy

Both individuals (designer and checker) are responsible for the accuracy of the quantity. Mistakes in quantities can be very costly to the Department. The designer and checker must account for all items of work and must also be careful to enter an item of work only once.

Final pay items are designated with an "(F)" at the end of the item description. These quantities are paid during construction with no field measuring or checking of the calculations for these quantities (i.e., no adjustment is made in the field). Therefore, it is important that the quantity shown in the estimate be as accurate as possible. See Appendix 11.5-A2 for a list of bridge items and the percent accuracy of the final quantity required between the designer and checker.

In calculating the total amount of structural steel, Item 550.1, the splice plates, cross-frames, diaphragms and gusset plates shall be quantified. A percentage can be included for nuts, washers, and bolts, typically 0.5% (15,000 square foot bridge).

Generally, the quantity shall be calculated to one more significant digit than is stated in the Method of Measurement for that item in the *NHDOT Standard Specifications for Road & Bridge Construction.*

11.5.4 Cost Estimating Quantities

Quantities for establishing cost estimates are often necessary during various stages of project development and are required at the completion of the Final Contract Plans. These quantities shall be calculated from the best information available at the time. The policy regarding the preparation of quantity calculations is as follows:

A. Conceptual Stage

During the conceptual stage of a project, estimated quantities are required to arrive at an estimated cost. Conceptual cost estimates are prepared when little information about the project is available (See Chapter 2, Section 2.9 TS&L Estimate, for guidelines on slope-intercept cost estimates). Assume a "worst case" condition, unless actual conditions are known. In remote areas, or for small projects, use the high end of the cost range. Use mid-range costs for usual conditions. To cover unforeseen project modifications, add a 10 percent or higher contingency to the project estimate. These contingencies can be adjusted depending on the preliminary information available.

B. Preliminary Plan Stage

Upon completion of the preliminary plans, estimated quantities may be required to arrive at an estimated cost. Preliminary design estimates are prepared during the preliminary design stage when the type and size of the bridge is known. Limited foundation information is sometimes available at this stage. If the foundation conditions are unknown, assume the "worst case conditions." The construction costs from previous projects, located in the estimate database G:\DATABASE\BUR34\Estwork32.mdb, shall be used with an appropriate inflation factor along with a minimum of 10 percent contingency to cover scope creep and unforeseen site conditions or constraints. See Chapter 1, Section 1.4.4, Preliminary Plans (40% -50%) for guidelines on developing the preliminary estimate.

C. Design Stage

Quantity calculations shall be made, reviewed, and submitted for the PPS&E (80%) and PS&E (90%) stages. As refinements in the design are made, quantities that have increased, may require an increase in STIP. During the design period, the designer shall keep the Senior Project Engineer informed of significant changes to the design that might affect the cost. Examples of significant changes are: deeper than expected footings and seals, use of deep foundations (shafts or piles) when none were previously expected, change of substructure types, and changes to superstructure. This is a critical element in the project estimate process. See Chapter 1, Section 1.4.4, Preliminary Plans, Specification & Estimate (PPS&E) (80%) and PS&E (90%) for guidelines on developing the estimate.

D. Final Contract Quantities

Upon completion of the structural design and plans, the final quantities of materials and work items involved in the construction of the project shall be computed. The contract estimate is prepared using the final quantities shown on the final contract plans, unit bid prices from the estimate data base located at G:\DATABASE\BUR34\Estwork32.mdb, other historical data, and the judgment of the engineer preparing the estimate. Unique projects require special consideration and shall include an appropriate construction cost contingency. The quantity summary box on the plan and the contract estimate needs to

be checked to confirm that both have the same item numbers, description, unit, and quantity. If any errors are found, the change needs to be made on either the plan sheet or estimate. See Chapter 1, Section 1.4.4, PS&E (90%) for guidelines on developing the estimate.

11.6 Concrete Drawings (Masonry & Reinforcement)

11.6.1 General

- Reinforcement layout: Avoid using "±" spacings. Layout reinforcing steel to even spaces, preferably standard spacings [e.g., 6 in. (150 mm), 1 ft.-0 in. (300 mm), etc.]. Label dimensions at the joints or ends of the wall, footing, etc.
- List reinforcement bars separately for different portions of the structure (e.g., abutments, piers, decks, etc.) on the reinforcing schedule sheets of the contract plans.
- Use reinforcing bar letter prefixes which will locate the bar in the structure (e.g., Abut. A Footing, AF; Abutment B, B; Northwest Wing, NW; Deck, D; Approach Slab, AS; Frame, F; Pier, P; Retaining Wall, RW; etc.).
- Reinforcing steel shall be designated by a bar number (e.g., NW1, NW2, NW3, etc.) and proceeded by bar size (e.g., #4NW1, #5NW2). Indicate reinforcing bars with heavy solid lines (MicroStation line weight of 3). Show masonry lines on the reinforcing sheets with a lighter linestyle (MicroStation line weight of 1). See *NHDOT CAD/D Procedures and Requirements* for additional information.
- Epoxy coated reinforcement shall be noted by an “E” after the bar mark on all reinforcing details. If all the reinforcing in the deck is epoxy, a note on the Reinforced Deck Plan can be put on the plan in place of noting all the bar marks.
- Stainless steel reinforcement shall be noted by an “SS” after the after the bar mark on all reinforcing details. If all the reinforcing in the deck is stainless steel, a note on the Reinforced Deck Plan can be put on the plan in place of noting all the bar marks.
- Reinforcement geometry shall be clear in plan details. Congested areas, bent bars, etc. can be clarified with additional views/details/sections or bending diagrams. In bending diagrams, reinforcement dimensions are given out-to-out.
- Call out each rebar only twice; the spacing for the bar is shown in one view and the bar is indicated in a view/section taken from a different angle. It may also be indicated in other views if necessary for clarity. The spacing for a bar must go on a dimension line with extension lines. Do not point to a single bar and call out the spacing.
- When calling out rebar spacing, always give a distance. If the distance needed is not equally divisible by the number of spaces, then give a maximum spacing in the callout. Do not use “equal spaces” as in “23 equal spaces = 18’-9”. The construction workers should not have to calculate the spacing. Also, do not use the word “about”, as in 23 spaces @ about 10” = 18’-9” - this is open to too much interpretation. Instead, this shall read “23 spaces @ 10” max. = 18’-9”.
- Show all exposed corners and edges of concrete chamfered 3/4 in. (20 mm). The description shall be noted under the standard bridge notes.
- Show and label the required lap length of reinforcing bars for each portion of the bridge (e.g. footing, abutment, deck, etc.) on the view where the bar is shown.
- Concrete dimensions are given to the nearest 1/8 in. (1 mm) [Including bottom of deck slab elevations.]
- Concrete elevations are rounded to the nearest hundredth of a foot (metric; rounded to the nearest thousandth of a meter).

- See NHDOT Bridge Design Manual Chapters 6 and 8 for sample details of concrete elements.
- Rebar Schedule: Dimension partial lengths of reinforcing steel to the nearest ¼-in. (5-mm); dimension overall lengths to the nearest 1-in. (25-mm).
- In order to achieve standard stock lengths, reinforcing steel mechanical connectors should be dimensioned on the reinforcing schedule with the following splice lengths (where practical):

  Item 544.11, Reinforcing Steel, Mechanical Connector
  Item 544.21, Reinforcing Steel, Epoxy Coated, Mechanical Connector

Reinforcing Steel Mechanical Connector Standard Splice Lengths		
Bar Size	**Splice Length (A)**	**Typical Location**
#5 (16)	3'-3" (1.0-m)	Abutment, abutment backwall, wingwall, approach slab, and bridge deck
#6 (19)	3'-10" (1.2-m)	Bridge deck

Criteria:
- 3,000 or 4,000-psi (20.7 or 27.6 MPa) concrete
- Black or epoxy coated bars
- Horizontal temperature reinforcing steel (abutment, backwall, wingwall, & approach slab)
- Primary reinforcing steel (bridge deck)
- 1.25-in, 2.5-in, or 3-in. (32, 64, or 76-mm) minimum cover

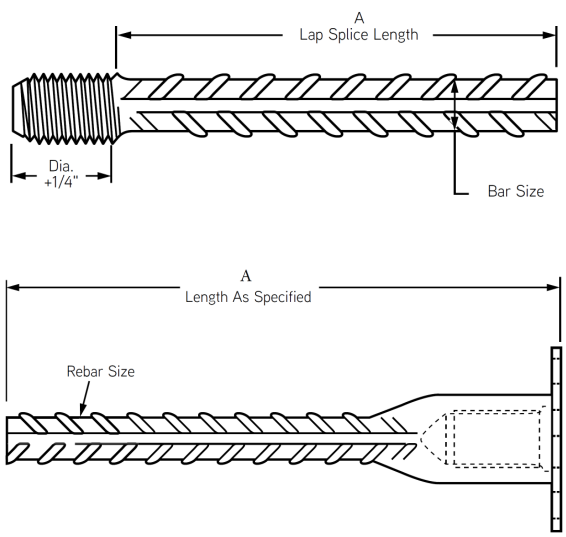

Reinforcing Steel Mechanical Connectors (Male and Female)

Figure 11.6.1-1

11.7 Structural Steel Drawings

11.7.1 General

- On structural steel drawings, avoid duplication in the designation of components. Give the complete designation for each component only once, usually in a major view, then use an abbreviated designation to locate the component in all other sections, details, etc.
- Use current AISC symbols for plates, shapes, bars, etc.
- Use current AWS symbols for welds.
- Steel dimensions are given to the nearest 1/16 in. (1 mm).
- See Chapter 7 for sample details of steel elements.
- All fracture critical members (FCM) shall be noted on all drawings with a diamond label at each member in accordance with *AASHTO LRFD Section 6.6.2.1*. See Figure 11.7.1-1.

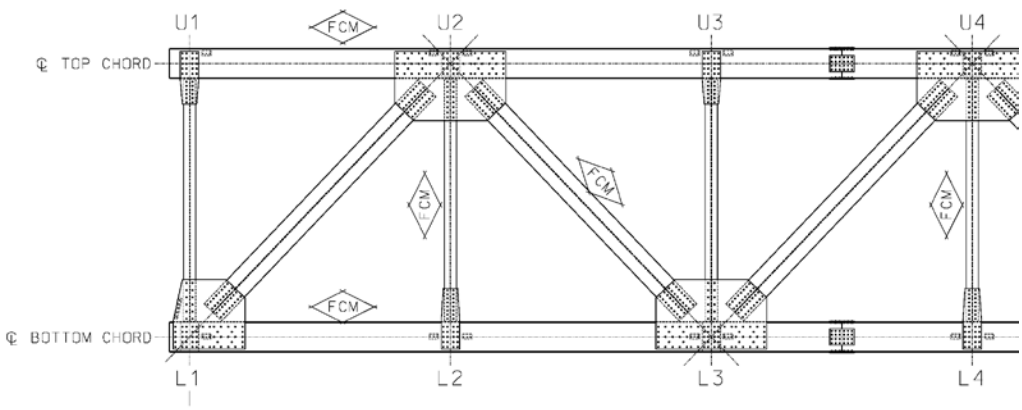

Diagonal and Vertical Layout

Example of Labeling Fracture Critical Members

Figure 11.7.1-1

Page intentionally left blank.

11.8 Bridge Rehabilitation Drawings

11.8.1 General

- If the bridge deck is constructed using phases, the deck section showing the barrier membrane joint location(s) for the phasing shall be dimensioned so the membrane is placed like shingles (overlapped so the splice opening is on the downward slope) between the phases.
- The phasing layout shall be as follows, unless otherwise approved by the Design Chief:
  A. Three-phase construction:
     - If the bridge deck has a crown and the rehabilitation work needs to be completed with 3 phases, phase 1 and 2 shall be placed on the deck ends and phase 3 placed at the center, to create the shingle effect with the bridge barrier membrane in both directions.
     - If the bridge deck is superelevated and the rehabilitation work needs to be completed with 3 phases, phase 1 shall be placed at the low end of the deck, phase 2 at the center, and phase 3 on the high end of the deck, to create the shingle effect with the bridge barrier membrane.

  B. Two-phase construction:
     - If the bridge deck has a crown and the rehabilitation work needs to be completed with 2 phases, phase 1 shall be placed at the low end to a point near the crown point. Phase 2 will pass over the crown and cover the low side membrane of phase 1 to create a shingle effect.
     - If the bridge deck is super elevated and the rehabilitation work needs to be completed with 2 phases, the layout is similar to a deck with a crown.
- For all phases, the portable concrete barrier for traffic control shall be shown placed on the bridge base pavement, *not* on the final wearing course.
- For bridge decks constructed in phases, mechanical connector reinforcing bars shall be used if there is not enough space for the bar splice length to extend beyond the construction joint.
- For the use of temporary barrier, see Chapter 7, Section 7.
- For phase construction, the following shall be considered in the location of the deck joint:
  - Minimum temporary lane widths may be required by the Traffic Control Committee and NETC (New England Transportation Consortium) Multistate Permit Routes (see the NETC map located at: http://www.nh.gov/dot/org/operations/highwaymaintenance/overhaul/documents/netcmultistatepermitroutes.pdf)
  - If the deck joint is located over a girder, this will allow the girder to deflect due to half the dead load, and no temporary deck support would be required.
  - If the deck joint is over a girder, the designer shall consider how the bridge will deflect between the phases.
  - A closure pour may be required for some situations such as large deflections, wide decks, or long flexible girders that can twist.

- □ If an analysis shows that a construction joint is required at a certain location, it shall be noted on the plans that the location cannot be changed by the Contractor.
- □ Consider the bridge loading and constructability for all phases of construction.
- □ Locating the deck joint between the girders may provide better balance during construction. Placing the deck joint over a girder is not always the best location.
- □ Cross-frames under a deck joint shall never be bolted on both sides until the deck placement is complete because the bolt holes will not match up during phased construction. One side of the cross-frame shall be bolted and the holes on the other side field drilled once the bridge deck has been poured.
- □ If the difference in elevation between phasing joints is ≥ 1" (25-mm), a closure pour will be required.

- No shear key is required between phasing. Forming the key around the extended reinforcing and shear connectors is difficult.
- Existing curtain walls shall be removed to below bottom of deck or lower. See Figure 11.8.1-1.

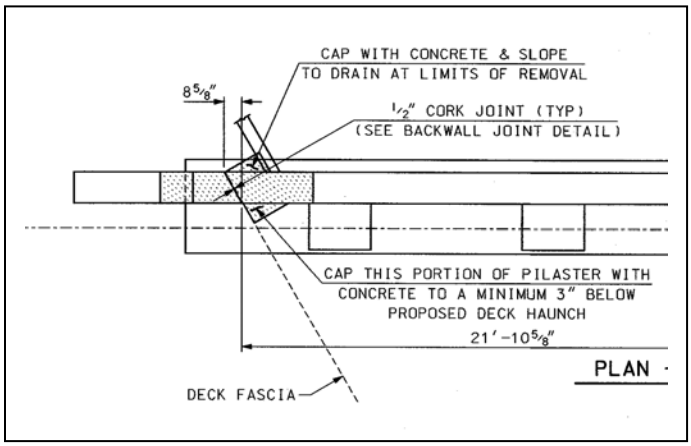

Existing Curtain Wall

Figure 11.8.1-1

- Item 520.01, Concrete Class AA
  - Use for partial-depth repair (including partial-depth repair in concrete coping).
  - Does not have "Above Footing" in the description because forming of the concrete is not required.
  - Not a final pay item.

- Item 520.0201 Concrete Class AA, Above Footings
  - Use for following locations:
    - Deck and wingwall coping
    - Deck overhang
    - Replace granite curb in coping
    - Deck expansion joint blockout

        - Backwall
        - Stubwall
    - Item 520.0201 was created as a *non-final* pay item after Item 520.02, Concrete Class AA, Above Footings was made into a final pay item.
    - The quantity of concrete is an estimate and a non-final pay item is required.
    - Requires forming of the concrete so includes "Above Footing" in description.

- Item 520.02012, Concrete Class AA, Above Footings (Abut/Wall/Pier Repair)
    - Use for abutment and wingwall repair
    - A *non-final* pay item.
    - The quantity of concrete is an estimate and a non-final pay item is required.
    - Requires forming of the concrete so includes "Above Footing" in description.

- Item 520.02013, Concrete Class AA, Above Footings (Full Deck Repair)
    - Use for full-depth deck repair
    - A *non-final* pay item.
    - The quantity of concrete is an estimate and a non-final pay item is required.
    - Requires forming of the concrete so includes "Above Footing" in description.

- For deck patching, curb/coping, and expansion joint rehabilitation, all new reinforcing shall be epoxy coated bars and can tie to black bars, unless directed otherwise by the Design Chief.
- Sample bridge rehabilitation plans are located at: http://www.nh.gov/dot/org/projectdevelopment/bridgedesign/sampleplans/index.htm

Page intentionally left blank.

11.9 Bridge Detail Sheets, Bridge Details, and Sample Plans & Notes

11.9.1 Bridge Detail Sheets

Bridge Detail Sheets are plan sheets prepared by the Department for use on NHDOT projects. Others who use the Bridge Detail Sheets do so at their own risk. Bridge Detail Sheets are backed by engineering analysis, calculations, crash testing, and are approved by NHDOT Administrators and the Federal Highway Administration (FHWA). Only certain details can be modified by designers. As noted on each bridge sheet, if any modifications are made to details other than those noted, the engineer responsible for the modification becomes the Engineer of Record (EOR) for those details and for all effects the modifications may have on other components within the sheet. The sheets are located at:
http://www.nh.gov/dot/org/projectdevelopment/bridgedesign/detailsheets/index.htm.
See Appendix 11.9-A1 for a list of the Bridge Detail Sheets.

11.9.2 Bridge Details

The Department makes these documents available on an "as-is" basis. Bridge Details are considered nothing more than *examples* of items that are often used with very similar application from job to job. The details are intended to be copied to a project and *modified to fit* the particular aspects of the project. They are not intended to be included in a contract plan set without close scrutiny for application to the job. The bridge details are located at http://www.nh.gov/dot/org/projectdevelopment/bridgedesign/bridgedetails/index.htm.
See Appendix 11.9-A1 for a list of the Bridge Details.

11.9.3 Sample Plans and Notes

A. Sample Plans

The Bureau of Bridge Design has assembled sample plans and bridge plan checklists that can be used as an aide in the preparation of detailed construction plans for bridges. The sample plans and checklists are intended to be used only as a *general guide*, or reminder, to the designer, checker, and reviewer, and are not intended to be a replacement for the user's own professional judgment based on sound engineering principles. It is the responsibility of the designer to provide the details that will allow the Contractor to construct the project as intended.

The Bureau of Bridge Design makes these documents available on an "as is" basis. Details and items of the sample plans may have changed. It is the responsibility of the designer to provide the most current details and items on the contract plans.

The sample plans are located at:
http://www.nh.gov/dot/org/projectdevelopment/bridgedesign/sampleplans/index.htm. See Appendix 11.9-A1 for a list of sample plans

The bridge plan checklists are located at:
http://www.nh.gov/dot/org/projectdevelopment/bridgedesign/sampleplans/index.htm and

- Chapter 2 for TS&L Plan Checklist

- Chapter 3 for Preliminary Plan Checklist
- Chapter 11, Appendix 11.9-A2 for Final Plan Checklist
- Chapter 11, Appendix 11.9-A3 for Constructability Checklist

B. Sample Notes

The Bureau of Bridge Design has assembled sample notes that can be used as an aide in the preparation of contract bridge plans. The sample notes are intended to be used only as a *general guide* to the designer, checker, and reviewer. The sample notes may be copied to a project and *modified to fit* the particular aspects of the project. They are not intended to be included in a contract plan set *without* close scrutiny for application to the project.

Project notes shall be placed on the Project Note Sheet *except* for notes that apply to elements that are manufactured specifically from the elements' sheets (e.g., expansion joints, bearings, railings), in which case, the notes shall be placed on their respective element sheet. The sample notes are located at http://www.nh.gov/dot/org/projectdevelopment/bridgedesign/sampleplans/index.htm.

References

1. American Association of State Highway and Transportation Officials (AASHTO), *AASHTO LRFD Bridge Design Specifications, 7th Ed., 2014*, Washington, D.C.

2. American Association of State Highway and Transportation Officials (AASHTO), *Standard Specifications for Highway Bridges, 17th Ed., 2002*, Washington, D.C.

3. New Hampshire Department of Transportation Bureau of Bridge Design, *Bridge Design Manual, October1, 2000*, Concord, NH

4. New Hampshire Department of Transportation Bureau of Highway Design, *Highway Design Manual, 2007, Vol. 1*, Concord, NH

5. New Hampshire Department of Transportation, *NHDOT Standard Specifications for Road and Bridge Construction, 2010,* Concord, NH

6. New Hampshire Department of Transportation, *NHDOT CAD/D Procedures and Requirements, 2012,* Concord, NH
   Retrieved from http://www.nh.gov/dot/cadd/microstation/index.htm

7. Washington State Department of Transportation, *Bridge Design Manual (BFM) M 23-50*. Retrieved from http://www.wsdot.wa.gov/Publications/Manuals/M23-50.htm

Page intentionally left blank.

New Hampshire DOT
Department of Transportation

Bridge Design Manual

Chapter 11 – Appendix A

January 2015 – v 2.0

(Revised June 2020)

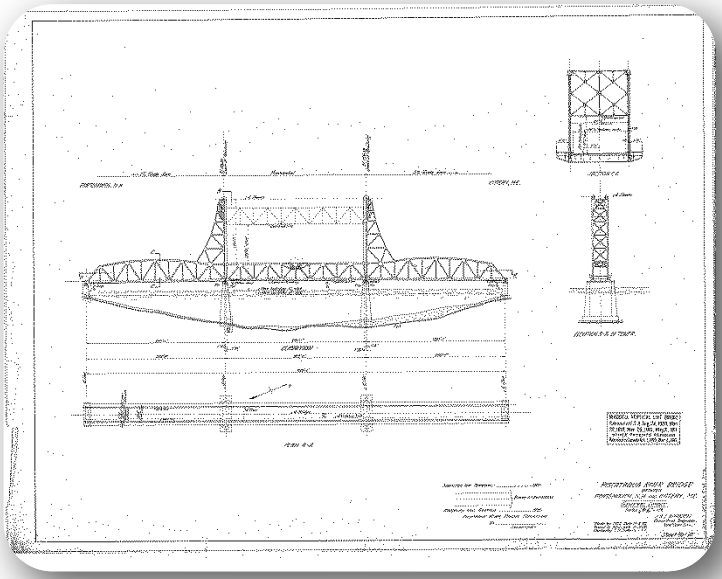

Page intentionally left blank.

DIMENSIONING EXAMPLES

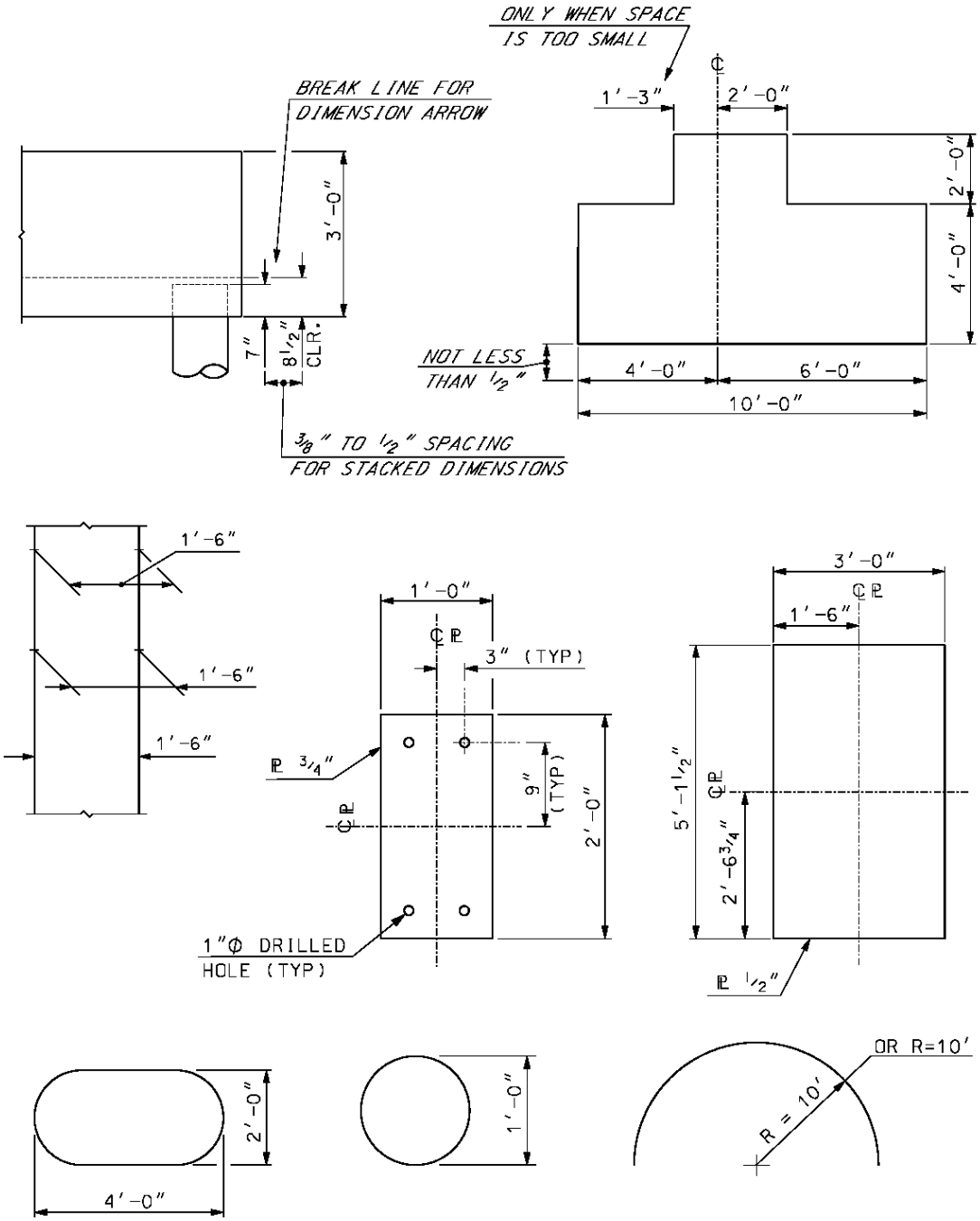

Page intentionally left blank.

HATCHING EXAMPLES

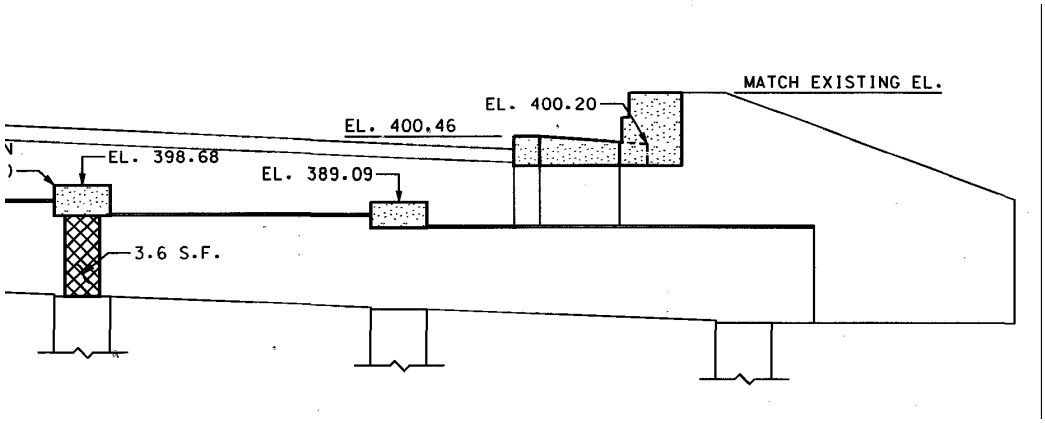

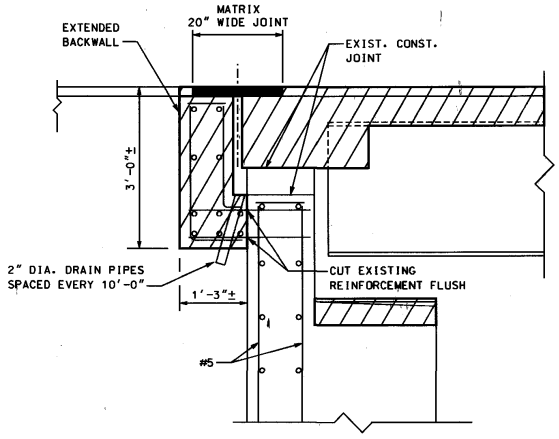

SECTION A-A (REMOVAL)
SCALE: 3/4" = 1'-0"

LEGEND

- LIMITS OF REMOVAL
- CONCRETE REPAIR
- CONCRETE RECONSTRUCTION
- CONCRETE

Note:

- Do not put concrete reconstruction hatching on top of removal hatching. Show separate details or one type of hatching.
- The type of hatching used shall not obstruct the detail, especially on the printed plan.

HATCHING EXAMPLES

(Refer to *NHDOT CAD/D Procedures and Requirements Manual*)

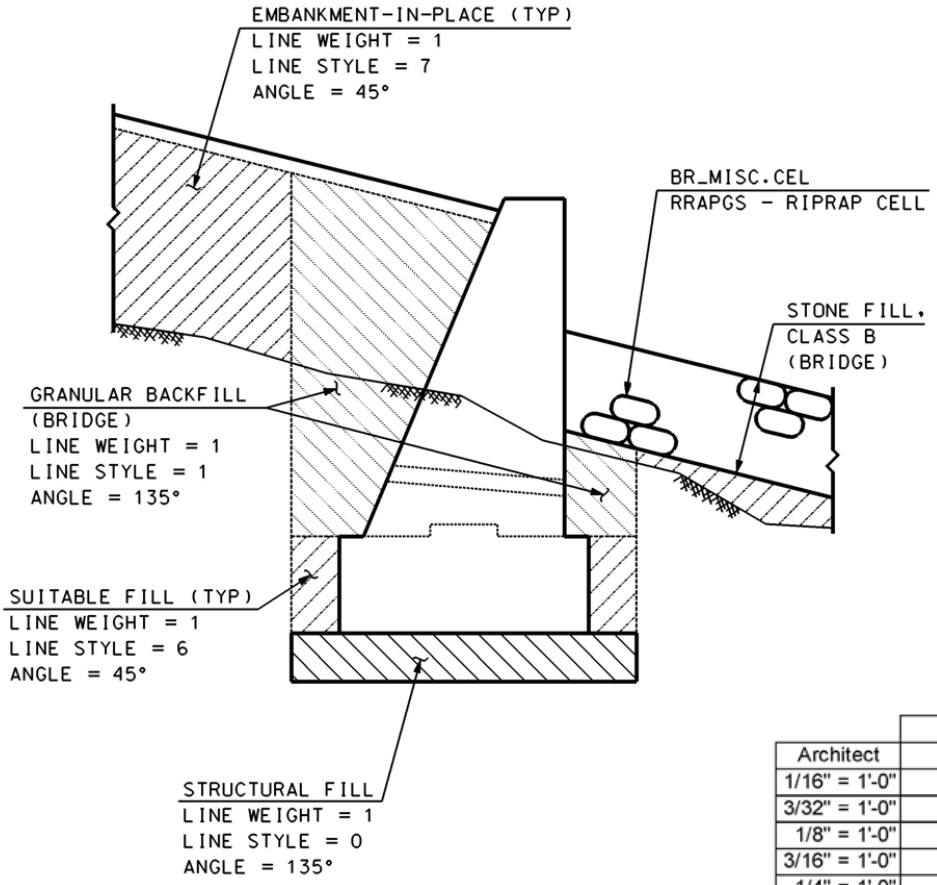

BRIDGE DESIGN
TYPICAL HATCHING
SCALE: 3/8" = 1'-0"

	Hatch spacing	
Architect	in	ft
1/16" = 1'-0"	24	2.00
3/32" = 1'-0"	16	1.33
1/8" = 1'-0"	12	1.00
3/16" = 1'-0"	8	0.67
1/4" = 1'-0"	6	0.50
3/8" = 1'-0"	4	0.33
1/2" = 1'-0"	3	0.25
3/4" = 1'-0"	2	0.17
1" = 1'-0"	1.5	0.13
1.5" = 1'-0"	1	0.08
2" = 1'-0"	0.75	0.06
3" = 1'-0"	0.5	0.04
6" = 1'-0"	0.25	0.02
12" = 1'-0"	0.125	0.01

Highway	in	ft
1" = 100'	150	12.50
1" = 50'	75	6.25
1" = 30'	45	3.75
1" = 20'	30	2.50
1" = 10'	15	1.25

ABBREVIATIONS

List of abbreviations commonly used on bridge plan sheets:

A

abutment	ABUT.
adjust, adjacent	ADJ.
aggregate	AGG.
alternate	ALT
ahead	AHD.
aluminum	AL.
American Concrete Institute	ACI
American Association of State Highway and Transportation Officials	AASHTO
American Society for Testing and Materials	ASTM
American Institute of Steel Construction	AISC
American Iron and Steel Institute	AISI
American Railway Engineering and Maintenance-of-Way Association	AREMA
American Wood Protection Association	AWPA
American Welding Society	AWS
and	&
angle point	A.P.
approved	APPRD.
approximate	APPROX.
area	A
Army Corps of Engineers	ACOE
asbestos cement pipe	ASB.CP
asphalt concrete	AC
asphalt treated base	ATB
at	@ (used only to indicate spacing or pricing, otherwise spell it out)
avenue	AVE.
average	AVG.
aveage annual daily traffic	AADT
average daily traffic	ADT

B

back	BK.
back of pavement seat	B.P.S.
bearing	BRG
begin horizontal curve (Point of Curvature)	P.C.
begin vertical curve	BVC
bench mark	BM
between	BTWN.
bituminous surface treatment	BST
bottom	BOT
boulevard	BLVD.

bridge	BR.
bridge drain	BR.DR.
building	BLDG.
buried cable	BC
C	
cast-in-place	CIP
cast iron pipe	(C.I.P.)
center, centers	CTR, CTRS.
centerline	℄
center of gravity	CG
center to center	CTR. to CTR., C/C, C-C
Celsius (formerly Centigrade)	C
cement treated base	CTB
centimeters	CM.
class	CL.
clearance, clear	CLR
compression, compressive	COMP.
column	COL.
concrete	CONC.
conduit	COND.
concrete pavement (Portland Cement Concrete Pavement)	PCCP
construction	CONST. or CONSTR.
continuous	CONT. or CONTIN.
corrugated	CORR.
corrugated metal	CM
corrugated steel pipe	CSP
countersink	CSK.
county	CO.
creek	CR.
cross beam	X-BM.
crossing	XING
cross section	X-SECT.
cubic feet	CF or CU. FT. or FT.^{3}
cubic inch	CU. IN. or IN.^{3}
cubic yard	CY or CU. YD. or YD^3
culvert	CULV.
D	
degrees, angular	° or DEG.
degrees, thermal	C or F
Department of Resources and Economic Development	DRED
design hourly volume	DHV
diagonals(s)	DIAG.
diameter	DIAM. or ø
diaphragm	DIAPH.

dimension	DIM.
direct tension indicator	DTI
double	DBL.
drive	DR.
E	
each	EA.
each face	EF
easement	EASE., ESMT.
East	E.
edge of pavement	EP
edge of shoulder	ES
endwall	EW
electric	ELECT
elevation	EL. or ELEV.
embankment	EMB.
end horizontal curve (Point of Tangency)	P.T.
end vertical curve	EVC
Engineer	ENGR.
Environmental Protection Agency	EPA
equal(s) or = (mathematical result)	EQ (as in eq. spaces)
estimate(d)	EST.
excavation	EXCAV.
excluding	EXCL.
expansion	EXP., EXPAN.
existing	EXIST.
exterior	EXT.
F	
Fahrenheit	F
far face	F.F.
far side	FS
Federal Highway Administration	FHWA
feet (foot)	Ft. or ‘
feet per foot	FT./FT. or ‘/’ or ‘/FT.
field splice	FS
figure, figures	FIG., FIGS.
flat head	F.H.
foot kips	FT-KIPS
foot pounds	FT-LB
footing	FTG.
forward	FWD.
freeway	FWY.
G	
gallons(s)	GAL.
galvanized	GALV.
galvanized steel pipe	GSP
gauge	GA.
General Special Provision	GSP
girder	GR.

ground	GR.
guard railing	GR
H	
hanger	HGR.
height	HT.
height (retaining wall)	H
hexagonal	HEX.
high strength	H.S.
high water	H.W.
high water mark	H.W.M.
highway	HWY.
horizontal	HORIZ.
hot mix asphalt	HMA
hour(s)	HR.
hundred(s)	HUND.
I	
included, including	INCL.
inch(es)	IN. or “
inside diameter	I.D.
inside face	I.F.
interior	INT.
intermediate	INTERM.
interstate	I
invert	INV.
J	
joint	JT.
junction	JCT.
K	
kilometer(s)	KM.
kilopounds	KIPS, K.
L	
layout	LO
left	LT.
length of curve	L.C.
linear feet	L.F.
load factor design	LFD
load and resistance factor design	LRFD
longitudinal	LONGIT.
lump sum	L.S.
M	
maintenance	MAINT.
malleable	MALL.

manhole	MH
manufacturer	MFR
maximum	MAX
mean high water	MHW
mean higher high water	MHHW
mean low water	MLW
mean lower low water	MLLW
mechanically stabilized earth	MSE
meters	M
mile(s)	MI.
miles per hour	MPH
millimeters	MM
minimum	MIN
minute(s)	MIN. or ‘
miscellaneous	MISC.
modified	MOD.
monument	MON.

N

National Design Specification for Wood Construction	NDS
National Geodetic Vertical Datum 1929	NGVD 29
National Highway System	NHS
National Steel Bridge Alliance	NSBA
near face	NF
near side	NS
New England Bulb Tee	NEBT
North	N.
North American Vertical Datum 1988	NAVD 88
Northbound	NB
Northeast Protective Coatings Committee	NEPCOAT
not to scale	NTS
number; numbers	#, NO., NOS.

O

Occupational Safety & Health Administration	OSHA
on center	OC
ordinary high water	OHW
or	/
original ground	O.G.
ounce(s)	OZ.
ouside diameter	O.D.
outside face	O.F.
out to out	O to O, O-O
overcrossing	O-XING
overhead	OH

P

page; pages	P.; PP.

pavement	PAV'T
pedestrian	PED.
percent	%
pivot point	PP
Plans, Specifications and Estimates	PS&E
plate	ℙℓ or PL
point	PT.
point of compound curve	PCC
point of curvature	P.C.
point of intersecton	P.I.
point of reverse curve	PRC
point of tangency	P.T.
point of vertical curve	PVC
point on horizontal curve	POC
point on tangent	POT
polyvinyl chloride	PVC
portland cement concrete	PCC
pound, pounds	LB., LBS., #
pounds per square foot	PSF, LBS./FT.^{2}
pounds per square inch	PSI, LBS./IN.^{2}
power pole	PP
precast	P.C.
Precast/Prestressed Concrete Institute	PCI
pressure	PRES.
prestressed	P.S.
prestressed concrete pipe	P.C.P
profile grade line	PGL
proposed	PROP.
prosecution of work	POW
Q	
quality control/quality assurance	QC/QA
quantity	QUANT.
quart	QT.
R	
radius	R.
railroad	RR
railway	RWY.
Range	R.
Regional Planning Commissions	RPC
regulator	REG.
reinforced, reinforcing	REINF.
reinforced concrete	RC
reinforced concrete box	RCB
reinforced concrete pipe	RCP
required	REQ'D
retaining wall	RET.WALL
revised (date)	REV.

right	RT.
right of way	R.O.W., R/W
road	RD.
roadway	RDWY.
route	RTE.
S	
seconds	SEC. or “
Section (map location)	SEC.
Section (of drawing)	SECT
sheet	SHT.
shoulder	SHLD. or SH.
sidewalk	SW. or SDWK
South	S.
southbound	SB
space(s)	SPA
splice	SPL
specification	SPEC.
square foot (feet)	SQ. FT. or FT.^{2}
square inch	SQ. IN. or IN.^{2}
square yard	SY, SQ.YD. or YD.^{2}
station	STA.
standard	STD.
State Historic Preservation Office	SHPO
state program general permit	SPGP
State Transportation Improvement Program	STIP
state route	SR
stiffener	STIFF.
stirrup	STIRR.
structure, structural	STR.
surface, surfacing	SURF.
survey point	S POINT
symmetrical	SYM
T	
tangent	TAN. or T.
telephone	TEL.
temporary	TEMP.
test hole	T.H.
thick(ness)	TH.
thousand	M
thousand (feet) board measure	MBM
ton(s)	T.
top of bank	TOB
total	TOT.
township	T.

traffic control plan	TCP
transition	TRANS.
transportation	TRANSP.
transverse	TRANSV.
travel way	T.W.
treatment	TR.
typical	TYP
U	
ultimate	ULT.
undercrossing	U-XING
United States Coast Guard	USCG
V	
variable, varies	VAR.
vertical	VERT.
vertical curve	V.C.
vitrified clay pipe	VCP
volume	VOL. or V
W	
water surface	W.S.
weight(s)	WT.
welded steel pipe	WSP
welded wire fabric	W.W.F.
West	W.
wingwall	W.W.
with	W/
without	W/o
working point	W.P.
working stress design	WSD
Y	
yard, yards	YD., YDS.
year(s)	YR.

DRAWING SCALES

In MicroStation, the details (Bridge Design only) are drawn at 1:1, and then scaled down to fit the sheet border. A self-reference is created for each detail, and then scaled accordingly into the border. The reference files usually have a logical name such as "Detail A", "Section B-B". Note, do not use 1" = 40' scale [English] (there is no physical 80 scale) or use 1:75 or 1:150 [metric] (there is no physical 150 or 300 scale).

Architect Scale	Absolute Scale
$^{1}/_{16}$" = 1'-0"	1:192
$^{3}/_{32}$" = 1'-0"	1:128
$^{1}/_{8}$" = 1'-0"	1:96
$^{3}/_{16}$" = 1'-0"	1:64
¼" = 1'-0"	1:48
$^{3}/_{8}$" = 1'-0"	1:32
½" = 1'-0"	1:24
¾" = 1'-0"	1:16
1" = 1'-0"	1:12
1 ½" = 1'-0"	1:8
2" = 1'-0"	1:6
3" = 1'-0"	1:4
6" = 1'-0"	1:2
12" = 1'-0"	1:1

Highway Scale	Absolute Scale
1" = 100'	1:1200
*1" = 50'	1:600
1" = 30'	1:360
*1" = 20'	1:240
1" = 10'	1:120
1' = 1'	1:1

Metric Scale
*1:500
*1:250
1:125
1:100
1:50
1:25
1:20
1:10
1:5
1:2
1:1

* These scales are preferred for use on the Gen Plan and Site Plan, depending on the size of the bridge and how it fits on the page.

Page intentionally left blank.

COLOR LEGEND

(For MicroStation CAD/D drawings, see the cell "Legend" for pen numbers)

LEGEND

LF8NT00	Bituminous Concrete Pavement of Proposed Roadway PRISMACOLOR CANARY YELLOW #916
LF6NT00	Shoulder of Proposed Roadway PRISMACOLOR DARK BROWN #946
LF60NT00	Proposed Roadway Traffic Islands PRISMACOLOR TRUE GREEN #910
LF33NT00	Proposed Sidewalk PRISMACOLOR PURPLE #931
LF53NT00	Access Points to Proposed Roadway (Drives, etc.) PRISMACOLOR ORANGE #918
LF42NT00	Approximate Limit of Slope Work and Landscaping PRISMACOLOR SPRING GREEN #913
L7M/L42M	Removal of Existing Pavement Outside of Slope Work PRISMACOLOR COOL GREY 50% #1063/SPRING GREEN #913
LF7NT50	Existing Pavement (Roadways, Drives, Sidewalks, etc.) PRISMACOLOR COOL GREY 50% #1063
LHEARGRN	Existing Tree and/or Brush Line PRISMACOLOR DARK GREEN #908
LHEARBLU	Water (Rivers, Streams, Lakes, Ponds, Swamps, etc.) PRISMACOLOR TRUE BLUE #903
LHEARRED	Buildings PRISMACOLOR CARMINE RED #926
L3M/L0M	Buildings To Be Removed PRISMACOLOR CARMINE RED #926
LFNR5	Wetlands PRISMACOLOR TRUE BLUE #903
LD0T31	Property Lines PATTERN TAPE BLACK 1/16"
L19	State, County, City, and Town Lines FLOURESCENT TAPE ORANGE 1/32"
LD0T62	Existing Easement Lines PATTERN TAPE ORANGE 1/32"
L62	Proposed Easement Lines GLOSS TAPE ORANGE 1/16"
LD0T27	Existing R.O.W. (Right Of Way) PATTERN TAPE BLUE 1/32"
L27	Proposed R.O.W. MATTE OR CREPE TAPE BLUE 1/16"
LD0T23	Existing C.A.R.O.W. (Controlled Access) PATTERN TAPE GREEN 1/32"
L23	Proposed C.A.R.O.W. MATTE OR CREPE TAPE GREEN 1/16"
LD0T63	Existing L.A.R.O.W. (Limited Access) PATTERN TAPE RED 1/32"
L63	Proposed L.A.R.O.W. MATTE OR CREPE TAPE RED 1/16"
LF21NT50	Existing Tree Fill PRISMACOLOR DARK GREEN #908
LF11NT50	Building Fill PRISMACOLOR CARMINE RED #926
LF25NT50	Water Fill PRISMACOLOR TRUE BLUE #903
LF15NT50	Shadow
LSTONEF or LSTONEC	Stone Fill
LF14NT00/ LF27NT00	Bridge Removal

	Concrete GRASS GREEN 50%; CAD/D PEN #42
	Stone Fill COOL GREY 50%; CAD/D PEN #12
	Girder (weathering steel) BROWN 50%; CAD/D PEN #17
	Girder (steel painted green) DARTMOUTH GREEN; CAD/D PEN #2

Page intentionally left blank.

New Hampshire DOT Department of Transportation

Designer: Name Date: xx Sht 1 of x

Checker: Name Date: xx

Proj. No: xxxx Project: xxx over xxx

Item:	Item Description:	Unit:	Quantity:
520.7002	Concrete Bridge Deck (QC/QA) (F)	CY	

Total volume of Item 520.7002 = **250 yd^3**

Sheet Description: This sheet estimates the volume of concrete in the bridge deck. Beam haunches and cantilevered deck overhangs are included.

Volume of Concrete in Deck where Deck Panels are Located

Area of hatching of deck =	A_{hatch} =	*17.99 ft²*	*measured in CAD	
Length of Deck with Panels =	L_{panels} =	*304.00'*	*measured in CAD	*202.55 yd³*
Volume of C.I.P. Deck =	V_{deck} =	*202.55 yd³*	$= A_{hatch} * L_{panels} \div 27ft^2/yd^2$	

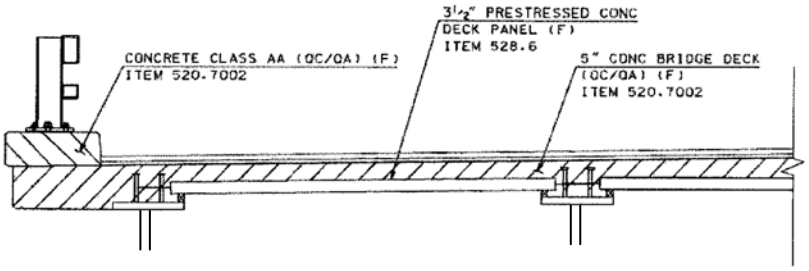

Volume of Concrete in Deck where Deck Panels are not Located

Area of hatching of deck =	A_{hatch} =	*8.48 ft²*	*measured in CAD, incl. 2 end	
Out to Out Bridge width =	b_{bridge} =	*33.00'*	*measured in CAD	
Volume of Deck =	V_{deck} =	*10.36 yd³*	$= (A_{hatch} * b_{bridge}) \div 27ft^2/yd^2$	*10.36 yd³*

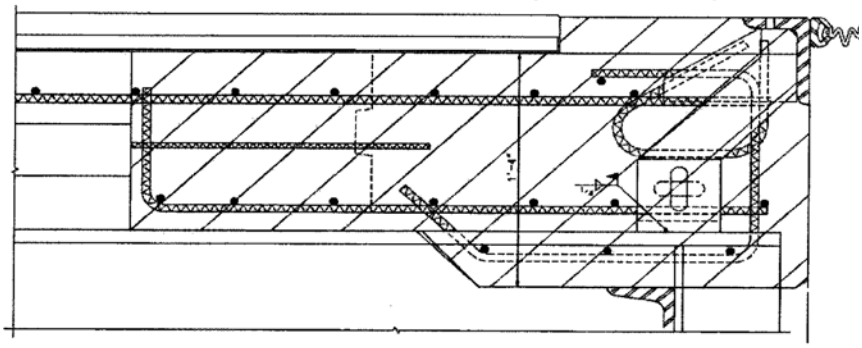

New Hampshire DOT Department of Transportation

Designer: Name Date: xx Sht 1 of x

Checker: Name Date: xx

Proj. No: xxxx Project: xxx over xxx

Item:	Item Description:	Unit:	Quantity:
520.7002	Concrete Bridge Deck (QC/QA) (F)	CY	

Sheet Description: This sheet estimates the volume of concrete in the bridge deck. Beam haunches and cantilevered deck overhangs are included.

Volume of Concrete in the Brush Curb

Area of hatching of brush curbs =	A_{brush} = *3.23 ft²*	*measured in CAD	
Length of Deck =	L_{deck} = *311.27'*	$= L_{span_1} + L_{span_2} + 2*L_{projection}$	
Volume of Brush Curb =	V_{brush} = *37.19 yd³*	$= A_{brush} * L_{panels} \div 27ft^2/yd^2$	*37.19 yd³*

250.1 yd³

Say: **250 yd³**

ACCURACY OF BRIDGE QUANTITIES						
Item No./ Section No.	**Description**	**Quantity Box Significant Digit**		**Calculation Significant Digit**		**% Accuracy** (Between Designer & Checker)
Section 207	Channel Excavation	1	CY	0.1	CY	90 %
Section 209	Granular Backfill	1	CY	0.1	CY	95 %
Section 403	Hot Bituminous Pavement	0.1	TON	0.1	TON	99 %
Section 504	Bridge Excavation	1	CY	0.1	CY	90 %
Section 508	Structural Fill	1	CY	0.1	CY	95 %
Section 511	Preparation for Concrete Bridge Repairs	0.1	SY	0.1	SY	90 %
Section 512	Preparation for Concrete Repairs	0.1	SY	0.1	SY	90 %
Item 520.0302	Concrete Class AA, Approach Slab (QC/QA) (F)	1	CY	0.1	CY	99 %
Item 520.12	Concrete Class A, Above Footings, (F)	1	CY	0.1	CY	99 %
Item 520.211	Concrete Class B, Footings (On Rock) (F)	1	CY	0.1	CY	99 %
Item 520.213	Concrete Class B, Footings (On Soil) (F)	1	CY	0.1	CY	99 %
Item 520.421	Concrete Class F, Flowable Fill, Excavatable	1	CY	0.1	CY	95 %
Item 520.6	Concrete Class T, Foundation Seal	1	CY	0.1	CY	95 %
Item 520.7X02	Concrete Bridge Deck (QC/QA) (F)	1	CY	0.1	CY	99 %
Item 528.111X	Prestressed Concrete Girders, NEBT XXX (F)	1	LF	0.1	CY	99 %
Item 528.12X	Prestressed Concrete Bridge Deck, Spread Box Beams (F)	1	LF	0.1	CY	99 %
Item 528.31X	Prestressed Concrete Bridge Deck, Butted Deck Beams (F)	1	SF	0.1	CY	99 %
Item 528.32X	Prestressed Concrete Bridge Deck, Butted Box Beams (F)	1	SF	0.1	CY	99 %
Item 528.5X	Prestressed Concrete Deck Panels (F)	1	SF	0.1	CY	99 %
Section 534	Water Repellent	1	GAL	0.1	GAL	95 %
Section 538	Barrier Membrane	1	SY	0.1	SY	95 %
Section 541	Waterstops	1	LF	0.1	LF	95 %
Section 544	Reinforcing Steel	1	LB	1	LB	100 %
Item 547	Shear Connectors (F)	1	EA	1	EA	100 %
Section 548	Elastomeric Bearings	1	EA	1	EA	100 %

ACCURACY OF BRIDGE QUANTITIES				
Item No./ Section No.	**Description**	**Quantity Box Significant Digit**	**Calculation Significant Digit**	**% Accuracy** (Between Designer & Checker)
Item 550.1X	Structural Steel (F)	1 LB	0.1 LB	99 %
Item 550.2X	Bridge Shoes (F)	1 EA	1 EA	100 %
Item 559.4	Asphaltic Plug Expansion Joint (F)	1 LF	0.1 LF	100 %
Section 560	Prefab. Compression Seal Exp. Joint (F)	1 LF	0.1 LF	100 %
Section 561	Prefab. Expansion Joint (F)	1 LF	0.1 LF	100 %
Item 562.1	Silicone Joint Sealant (F)	1 LF	0.1 LF	90 %
Section 563	Bridge Rail	1 LF	0.1 LF	100 %
Section 570	Stone Masonry	1 CY	0.1 CY	90 %
Section 582	Slope Paving	1 SY	0.1 SY	95 %
Section 583	Riprap	1 CY	0.1 CY	90 %
Section 585	Stone Fill	1 CY	0.1 CY	90 %
Item 587.1	Keyed Stone Fill	1 CY	0.1 CY	90 %
Section 591	Structural Plate Pipes, Pipe-Arches and Arches	1 LB	1 LB	100 %
Section 593	Geotextile	1 SY	0.1 SY	90 %

BRIDGE EXCAVATION LIMITS

EXISTING BRIDGE REMOVAL NOTES (located on the Note Sheet)

(1) The Contractor's method for removal of the existing bridge shall be submitted for documentation in accordance to 105.02, prior to the commencement of any removal operations.

(2) Item 502.10X, Removal of Existing Bridge Structure, shall include the removal of the entire superstructure.

(3) Item 502.10X, Removal of Existing Bridge Structure, shall include the removal of the piers (including footings) and any portions of existing substructure which fall *outside* the limits of all other excavation items.

NOTE: Removal of substructure *within* pay limits of other excavation items *may* be paid under Item 502.10X, if *approved* by District Construction Engineer (DCE).

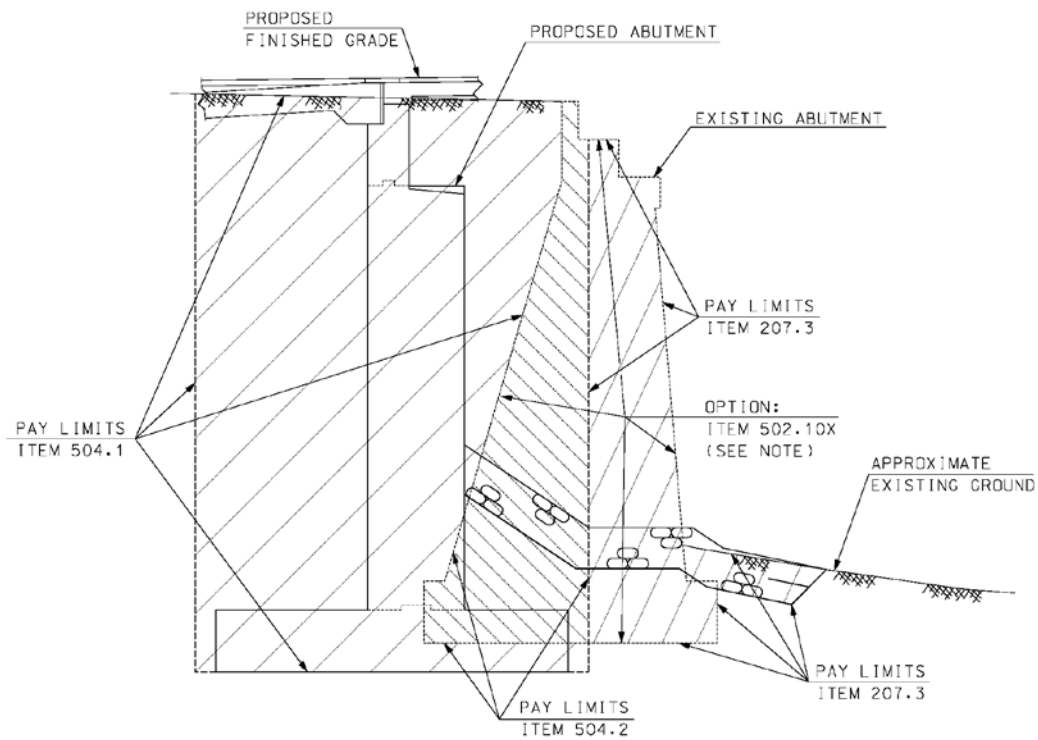

EXCAVATION LIMITS EXAMPLE

EXCAVATION LIMITS CON'T

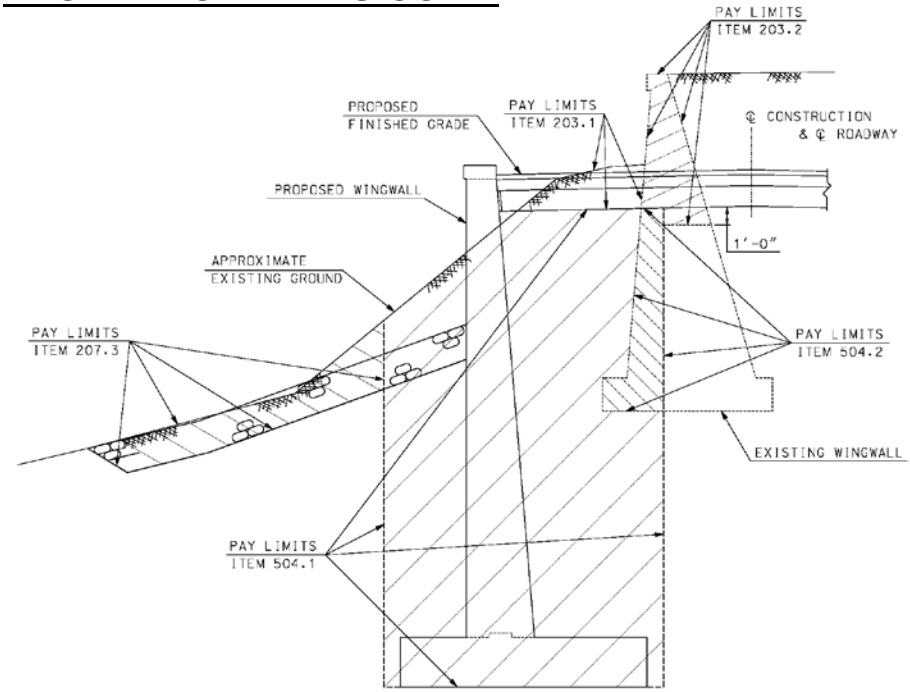

EXCAVATION LIMITS EXAMPLE

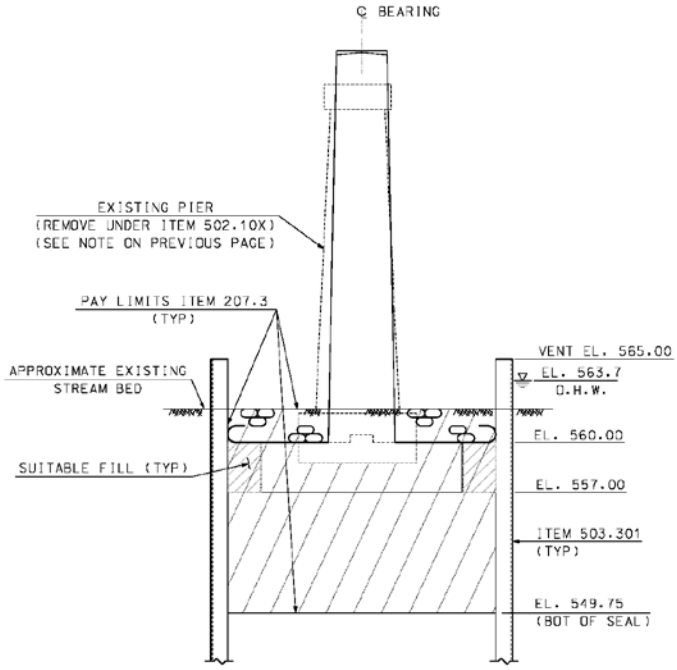

EXCAVATION LIMITS EXAMPLE

CHANGES IN ITEM NUMBER, DESCRIPTION OR METHOD OF MEASUREMENT

The following bridge items have changed or been added since the current edition of the *NHDOT Standard Specifications for Road & Bridge Construction*:

- Item 403.61, Pavement Joint Adhesive (Bridge Base) – *new*. The item is to be applied to curbs, concrete armory, and pavement joints (including phase construction joints and joints assuming a 12-ft. wide paver), for the bridge base course. A sub-Contractor is mobilized to the site to apply the adhesive for the bridge base. This becomes a costly item due to the small quantity on the bridge. If the project is a Bridge Design driven project, the adhesive for the approach base pavement shall also be included in Item 403.61 if the sub-Contractor will have a separate mobilization than the top coat placement. The adhesive for the top course is paid for under the highway item 403.6, Pavement Joint Adhesive. The new item shall be quantified and placed with the bridge quantities.

  If the project is a Highway Resurfacing Project, the pavement joint adhesive at the bridge will be paid for under the Highway Item 403.6. The bridge item does not need to be included.

- Item 502.1012, Removal of Existing Bridge Structure (Asbestos) - *new*. Use this item if asbestos containing materials have been identified in the bridge asphalt pavement, membrane or other areas.

- Item 511.0X, Preparation for Concrete Bridge Deck Repairs – The existing reinforcing is no longer coated with anticorrosion coating. It was difficult to apply therefore, not all the existing bar areas received the coating which was needed to stop the corrosion circuit. The Department is looking into the use of disc anodes for cathodic reduction. ~~This work now includes the application of an anti-corrosion coating to uncoated reinforcing steel that is within areas of the concrete patch. The uncoated reinforcing steel is blast cleaned and 2 coats of anti-corrosion coating are applied. This work and material is *subsidiary* to Item 511.0X. No quantity is required. A supplemental specification will be placed in each project that has Item 511.0X.~~

- Item 520.01, Concrete Class AA – For bridge rehabilitation work, use this item for partial-depth repair (including partial-depth repair in concrete coping). Does not have "Above Footing" in the description because forming of the concrete is not required. Not a final pay item.

- Item 520.0201, Concrete Class AA, Above Footings – For bridge rehabilitation work, use this item for the following:
  - Deck and wingwall coping
  - Deck overhang
  - Replace granite curb in coping
  - Deck expansion joint blockout
  - Backwall
  - Stubwall

  Item 520.0201 was created as a non-final pay item after Item 520.02, Concrete Class AA, Above Footings was made into a final pay item. The quantity of concrete is an estimate and a

non-final pay item is required. Requires forming of the concrete so includes "Above Footing" in description.

- Item 520.02012 Concrete Class AA, Above Footings (Abut/Wall/Pier Repair) – *new*. For bridge rehabilitation work, use this item for abutment and wingwall repair. It is a non-final pay item. Requires forming of the concrete so includes "Above Footing" in description,

- Item 520.02013, Concrete Class AA, Above Footings (Full Deck Repair) – *new*. For bridge rehabilitation work, use this item for full-depth repair. It is a non-final pay item. Requires forming of the concrete so includes "Above Footing" in description,

- Item 534.1, Water Repellent (Linseed Oil) - *removed*. Use Item 534.3, Water Repellent (Silane-Siloxane). The use of linseed oil is discontinued since it is no longer acceptable due to VOCS. Linseed oil which is currently produced meeting current regulations, does not meet NHDOT specifications.

- Item 534.3, Water Repellent (Silane-Siloxane) – Application rate is now 150 sf/gal.

  If the project has *existing* concrete, the following note shall be placed on the plans:

  > "Existing bridge copings, abutments, wings, backwalls, piers, and bridge seats shall be power washed (subsidiary to Item 534.3) in such a manner that overspray into surface waters is kept to a minimum. If the water beads, no coating needs to be applied. If the water does not bead, coat the surface with Item 534.3, Water Repellent (Silane-Siloxane), application rate of 150 sf/gal."

- Item 536.11, Epoxy Coating for Concrete – ***Do not*** *use on abutment seats*. It was found that the coating did not provide any benefit and traps water underneath it when it gets cracked. This item shall only be used on pier caps that have an expansion joint above. Any water that falls on a pier cap is able to run off the cap and not be trapped in the epoxy coating.

- Item 537, Concrete Sealer - *removed*. Concrete sealer will no longer be used on bridge abutments to prevent staining from weathering steel since testing from Materials and Research has shown that the sealer does not help in cleaning the staining off the abutments.

- Item 538.1, Barrier Membrane, Peel and Stick (F) - *formerly* Barrier Membrane.

- Item 538.2, Barrier Membrane, Peel and Stick –Vertical Surfaces (F) - *formerly* Barrier Membrane, Vertical Surfaces.

- Item 538.5, Barrier Membrane, Heat Welded (F) - *formerly* Barrier Membrane Welded by Torch. Use for deck lengths < 100 ft. (this is the hand method). If the hand method item is used on the plans, the Contractor always has the option to use machine method if preferred but gets paid for the item noted on the plans.

- Item 538.6, Barrier Membrane, Heat Welded – Machine Method (F) - *formerly* Barrier Membrane Welded by Torch, Machine Method. Use for deck lengths ≥ 100 ft.

- Item 559.4, Asphaltic Plug Expansion Joint (F) - *formerly* Elastomeric Plug Type Expansion Joint (F).

- Item 559.41, Asphaltic Plug for Crack Control (F) - *formerly* Modified Elastomeric Plug Type Flexible Joint (6" wide) (F).

- Item 559.412, Repair Asphaltic Plug Expansion Joint (F) - *formerly* Modified Elastomeric Plug Type Expansion Joint (20" wide) (F).

- Item 560.1, Elastomeric Sealant - *removed*. Use item 562.1, Silicone Joint Sealant (F) instead.

- Item 560.10xx, Prefabricated Compression Seal Expansion Joint (F) - *formerly* Item 560.1x, Prefabricated Compression Seal Expansion Joint (F).

- Item 560.12xx, Prefabricated Compression Seal Expansion Joint w/ Plow Plates (F) - *new*.

- Item 560.13xx, Prefabricated Compression Seal Expansion Joint - Rehabilitation (F) - *formerly* Item 560.20x, Prefabricated Compression Seal Expansion Joint – Rehabilitation (F).

- Item 561.10xx, Prefabricated Strip Seal Expansion Joint (F) - *formerly* Item 561.110, Prefabricated Expansion Joint Type A (F).

- Item 561.12xx, Prefabricated Strip Seal Expansion Joint w/ Plow Plates (F) – *new*.

- Item 561.13xx, Prefabricated Strip Seal Expansion Joint – Rehabilitation (F) - *formerly* Item 561.112x, Prefabricated Expansion Joint Type A - Rehabilitation (F).

- Item 561.20xx, Prefabricated Modular Bridge Joint System (F) - *formerly* Item 561.111, Prefabricated Expansion Joint, Modular Type A (F).

- Item 561.211, Prefabricated Expansion Joint, Modular Type B (F) – *removed.*

- Item 561.23xx, Prefabricated Modular Bridge Joint System – Rehabilitation (F) – *new*.

- Item 561.30xx, Prefabricated Finger Expansion Joint (F) - *formerly* Item 561.30x, Prefabricated Expansion Joint, Finger Joint (F).

- Item 561.33xx, Prefabricated Finger Expansion Joint – Rehabilitation (F) – *new*.

- Item 562.1, Silicone Joint Sealant (F) - *formerly* Item 559.5

- Items 563.xx, Bridge Rail xx – These items are no longer a final pay item. They are now measured by the linear foot.

- Item 583.x, Riprap, Class x – Revised specification. Riprap is required for erosion protection of bridge structures in waterways, for active waterway channel slopes and bottoms, and for intermittent waterway channels where the Engineer determines riprap protection is required to resist expected high water flow velocities or volumes. The designer shall specify a median stone diameter for the rock to correspond with the standard classes noted in the specification. (*This is the only item that will be used for bridge channel protection.*)

- Item 585.x, Stone Fill, Class x – This item will be used for *highway work* such as roadway slope protection and at drainage outlets.

- Item 587, Keyed Stone Fill – *removed.* (Parts of this specification were combined with Item 583.x to create one new channel protection specification.)

- Item 609.01, Straight Granite Curb – This item is used for the bridge approach curb as shown on the bridge approach rail sheets. The item needs to be listed on the Summary of Bridge Quantities table with an asterisk (*) by the item noting that it is "not an item total", if the item is also used as a highway item.

LIST OF BRIDGE DETAIL SHEETS

Bridge Detail Sheets are backed by engineering analysis, calculations, crash testing and are approved by NHDOT Administrators and the Federal Highway Administration (FHWA). Only certain details can be modified by designers. As noted on each bridge sheet, if any modifications are made to details other than those noted, the engineer responsible for the modifications becomes the Engineer of Record (EOR) for those details and all effects the modifications have on other components within the sheet.

The Bridge Detail Sheets are located at:
http://www.nh.gov/dot/org/projectdevelopment/bridgedesign/detailsheets/index.htm

- Steel Bridge Rail
- T101 Bridge Rail
- Bridge Mounted Sign Supports
- Deck Panels
- Soundwalls
- Lane Closure
- Vehicular Collision Pier Protection

LIST OF BRIDGE DETAILS

The New Hampshire Department of Transportation (NHDOT) makes these documents available on an "as is" basis. These documents are prepared by the NHDOT for use on NHDOT projects. Others who use the NHDOT documents do so at their own risk.

Bridge Details are considered nothing more than *examples* of items that are often used with very similar application from job to job. The details are intended to be copied to a project and *modified* to fit the particular aspects of the project. They are not intended to be included in a contract plan set without close scrutiny and modifications for application to the job.

The details are located at
http://www.nh.gov/dot/org/projectdevelopment/bridgedesign/bridgedetails/index.htm

- Expansion Joints
- Substructure

LIST OF SAMPLE PLANS

The Bureau of Bridge Design has assembled **Sample Plans** that can be used as an aide in the preparation of detail construction plans for bridges. The sample plans are intended to be used only as a *general guide*, or reminder, to the designer, checker, and reviewer, and are not intended to be a replacement for the user's own professional judgment based on sound engineering principles. It is the responsibility of the designer to provide the details that will allow the Contractor to construct the project as intended.

The sample plans are located at:
http://www.nh.gov/dot/org/projectdevelopment/bridgedesign/sampleplans/index.htm

- Plan Check Lists
- Sample Project Notes
- Expansion Joints
- Sign Structure
- Steel Girder Bridge Plans
- Steel Bridge Rehabilitation Plans
- Sample Soundwall Plans

Page intentionally left blank.

Located at: http://www.nh.gov/dot/org/projectdevelopment/bridgedesign/sampleplans/index.htm

BRIDGE DESIGN FINAL PLAN CHECKLIST

PROJECT INFORMATION

- Project Name:
- Project No:
- Bridge No.:
- Location:
- Designer:
- Checker:
- Drafter:
- Reviewer:

- NOTE: Each Task, when applicable & completed, is Checked (Y, N, N/A), Dated and Initialed by the Designer, Checker, and Reviewer.

Final Plan Tasks	Y	N	N/A	Designer Checker Reviewer		DATE	
Final Plan Data Collection							
• *Wetland and Shoreland Permits*				Comments:			
• *Special Provisions*							
• *PS&E Checklist*							
• *Supplemental Specification*							
• *Final ROW Purchase Plans*							
• *Final POW and TCP*							
• *EPA-NPDES Requirements*							
• *Supplemental Project Information Sheet*							
• *Director's Data Sheet*							
• *EPA ID Number (for painting)*							
• *Utilities Certificate*							
• *ROW Certificate*							
• *Scour Analysis Report*							
• *Fill out Bridge Flat Card*							
• *Fill out Bridge Particulars on Data Base*							
Front Sheet Plan						DATE	
• *Project Titles*				Comments:			
• *Location Map*							
• *Approval Signature Box*							
• *Signatures of FHWA, Front Office Obtained*							
• *PE Stamp and Signature*							
• *Traffic Data*							
• *Project Layout with bridge number*							
General Plan and Elevation						DATE	
• *Summary of Bridge Quantities Table*				Comments:			
• *Hydraulic Data*							
• *Bridge General Plan*							
○ Oriented with over road upstation to the right and centerline at horizontal, if possible							
○ Proposed Alignment and Stations							
○ Alignment Data							
○ Intersection Stations and & Angles							
○ Begin and End Bridge Stations & FG Elev							
○ Expansion and Fixed Joints							
○ Traffic Arrows							

*Checklist is to be used as a general guide. The list is **not** all inclusive. Additional information may be required on plans.*

Final Plan Tasks Cont.	**Y**	**N**	**N/A**	**Designer Checker Reviewer**		**DATE**	
General Plan and Elevation Cont.							
❍ Span Lengths				Comments:			
❍ Angles between Bents and Centerline							
❍ Proposed Utilities							
❍ Right-of-way Lines							
❍ North Arrow							
❍ Proposed Slopes and Limits of Toe of Slopes							
❍ Proposed Channel Protection							
❍ Stream Name and Flow Arrow							
❍ Proposed Drainage							
❍ Label Point of Min. Vertical Clearance							
❍ Outline of Bridge, Approach Slab, Piers, and Wingwalls							
❍ Working Line/ Construction Line							
❍ Proposed Bridge and Approach Rail							
❍ Label Roadways							
❍ Dimension Out to Out of Bridge Width							
❍ Dimension Rail to Rail and Coping Width							
❍ Length of approach slab							
• *Bridge Elevation*							
❍ Proposed Bridge Projected from Plan							
❍ Proposed Channel Protection							
❍ OHW and 100 yr Flood Call-out w/ Elev							
❍ Proposed Bridge and Approach Rail							
Project Notes						**DATE**	
• *Project Note Sheet*							
Site Plan and Profile						**DATE**	
• *Profiles of upper and lower roadways or railroad*				Comments:			
• *Bridge Site Plan*							
❍ Oriented with over road upstation to the right and centerline at horizontal, if possible							
❍ Deck not shown. Show channel or roadway below deck							
❍ Outline of Proposed Substructures, Footings, Approach Slab, Wingwalls							
❍ Outline of Existing Bridge							
❍ Proposed Alignment and Stations							
❍ Alignment Data							
❍ Intersection Stations and & Angles							
❍ Begin and End Bridge Stations & FG Elev							
❍ Expansion and Fixed Joints							
❍ Traffic Arrows							
❍ Angles between Bents and Centerline							
❍ Proposed Utilities							
❍ Right-of-way Lines/ Easements							
❍ North Arrow							
❍ Proposed Slopes							
❍ Proposed Channel Protection							
❍ Stream Name and Flow Arrow							

Final Plan Tasks Cont.	Y	N	N/A	Designer / Checker / Reviewer		DATE	
Site Plan and Profile Cont.							
❍ O.H.W., T.O.B., Shoreland, and 500 yr. Scour Line							
❍ Proposed Drainage							
❍ Existing Detail							
❍ Existing Contours							
❍ Detour bridge/ Temporary Diversion							
❍ Proposed Approach Rail							
❍ Limits of all toe of slopes							
• *Bridge Profile*							
❍ Grade/ Vertical Curvature/ Profile Grade							
❍ Profile of Bridge, Substructures and Approach Slabs							
❍ Approximate Existing Ground Line							
❍ Approximate Existing Bottom of Channel							
❍ Datum Elevation Line							
❍ Slopes of embankments, type and thickness of slope protection							
❍ Berm location. elevation and width							
❍ Finished and Existing Grade Elevations							
❍ Railroad/ Cross Road							
❍ High Water, O.H.W., Scour Elevations							
❍ Minimum Vertical Clearances							
❍ Bottom of Footing, Piles, and/or Drilled ❍ Shafts Elevations							
❍ Foundation Types							
❍ Vertical Curve Data							
❍ Track dimensions, centerline and ditches if railroad is involved							
❍ Length of each span measured along profile grade line							
Channel Sections and Survey Layout						DATE	
• *Typical approach cross sections for upper and/or lower roadways and channel*							
❍ Excavation and Fill Limits							
❍ Item numbers							
❍ Elevations							
• *Survey Layout*							
❍ Working Points Labeled							
❍ Working Points Coordinates Table							
❍ Dimension WP to WP							
❍ Angle of Crossing							
❍ North Arrow							
❍ CL Construction							
❍ Expansion and Fixed Bearing Locations							
Boring Log						DATE	
• *Boring Logs*				Comments:			
❍ Label Bottom of Footing and Water Level							
• *Boring Notes*							
• *Boring Layout Plan and Locations*							
❍ Proposed Alignment and Stations							

Final Plan Tasks - Cont.	Y	N	N/A	Designer Checker Reviewer		DATE	
Boring Log Cont.							
❍ Detour bridge/ Temporary Diversion Alignment				Comments:			
❍ North Arrow							
❍ Outline of Existing Bridge Substructure							
❍ Existing Detail							
❍ Outline of Proposed Bridge Substructures, Footings and Wingwalls							
❍ Boring Location Symbols and Label							
Footing Masonry						DATE	
❍ North Arrow				Comments:			
❍ Outline of Footing, Abutment and Wingwalls							
❍ Working Line and CL Construction Line							
❍ Working Points Labeled							
❍ Angle of Crossing							
❍ All dimensions and angles required to construct the abutment and wingwalls tied to the centerline of bearings and working line							
❍ Section Location Labels							
❍ Sections of Abutment and Wingwalls							
❍ Elevations Top and Bottom of Footing							
❍ Slope of Wingwall Batter							
❍ Footing Steps							
❍ Construction Joints for Phase Construction							
❍ Piles/ Drilled Shafts							
❍ Tie the pile spacing to the intersection of the centerline of bearings and working line							
❍ Show pile batter and location of battered piles							
Footing Reinforcement						DATE	
❍ North Arrow				Comments:			
❍ Outline of Footing, Abutment and Wingwalls							
❍ Working Line and CL Construction Line							
❍ Working Points Labeled							
❍ Angle of Crossing							
❍ Section Location Labels							
❍ Elevation of Top and Bottom of Footing							
❍ Layout of Reinforcement Steel							
❍ Label and Dimension Reinforcing Steel							
❍ Footing Steps							
❍ Construction Joints for Phase Construction							
❍ Identify Mechanical Connections							
❍ Label Lap Splices							
❍ Sections of Abutment and Wingwalls							
❍ Dimension J-bar Height from Top of Footing							
Abutment Masonry						DATE	
• *Plan*				Comments:			
❍ North Arrow							
❍ Outline Abutment and Partial Wingwalls							
❍ Working Line and CL Construction Line							
❍ Working Points Labeled							
❍ Angle of Crossing							

Final Plan Tasks - Cont.	Y	N	N/A	Designer / Checker / Reviewer		DATE	
Abutment Masonry Cont.							
❍ All dimensions and angles required to construct the abutment and wingwalls tied to the centerline of bearings and working line				Comments:			
❍ Section Location Labels							
❍ Outline of Beam Seats							
❍ Label Beam Numbers							
❍ Location of Utilities in Backwall and Sleeve							
❍ Location of Construction Joints							
❍ Phase Construction Location							
❍ Location of Exp. And Contraction Joints							
• *Elevation*							
❍ Proposed Ground							
❍ Existing Ground							
❍ Outline of New and Existing Abutment							
❍ Elevations							
❍ Structural Fill							
❍ Phase Construction Location							
❍ Working Line/ Construction Line Location							
❍ Piles/ Drilled Shafts							
❍ Existing and Proposed Utilities							
❍ Weepers							
❍ Architectural Treatment							
❍ Location of Construction Joints							
❍ Location of Exp. And Contraction Joints							
❍ Section Location Labels							
❍ Outline of Beam Seats							
❍ Location of Utilities in Backwall and Sleeve							
❍ Footing Steps							
❍ Wash requirements of bridge seat							
• *Section*							
❍ Proposed Ground							
❍ Existing Ground							
❍ Outline of New and Existing Abutment							
❍ Elevations							
❍ Structural Fill							
❍ Piles/ Drilled Shafts							
❍ Existing and Proposed Utilities							
❍ Weepers							
❍ Architectural Treatment							
❍ Location of Construction Joints							
❍ Location of Utilities in Backwall and Sleeve							
❍ All dimensions required to construct the abutment							
❍ Partial Approach Slab							
❍ Partial Deck End Section							
❍ Pay Limits for Excavation and Backfill							
❍ Channel Excavation and Protection Pay Limits							
• *Architectural Treatment Details*							
• *Abutment-Wingwall Joint Detail*							
• *Construction Joint Detail*							

Final Plan Tasks - Cont.	Y	N	N/A	Designer Checker Reviewer		DATE	
Abutment Masonry Cont.							
• *Anchor Bolt Layout Detail*				Comments:			
❍ Outline of pedestal							
❍ Outline of masonry plate							
❍ Centerline of bearings							
❍ Centerline of beam							
❍ All dimensions necessary to set the anchor bolts tied to the centerline of bearings and the centerline of beam							
Abutment Reinforcement						DATE	
❍ North Arrow				Comments:			
❍ Outline of Abutment							
❍ Working Line and CL Construction Line							
❍ Working Points Labeled							
❍ Angle of Crossing							
❍ Section Location Labels							
❍ Layout of Reinforcement Steel							
❍ Label and Dimension Reinforcing Steel							
❍ Footing Steps							
❍ Phase Construction Locations Labeled							
❍ Identify Mechanical Connections							
❍ Label Lap Splices							
❍ Sections of Abutment and Wingwalls							
❍ Horizontal Sections at Abutment, Backwall and Corner Sections							
❍ Dimension J-bar Height from Top of Footing							
Wingwall Masonry						DATE	
• *Elevation*				Comments:			
❍ Proposed Ground							
❍ Existing Ground							
❍ Outline of New and Existing Wingwalls							
❍ Elevations							
❍ Structural Fill							
❍ Phase Construction Location							
❍ Piles/ Drilled Shafts							
❍ Existing and Proposed Utilities							
❍ Weepers							
❍ Architectural Treatment							
❍ Location of Construction Joints							
❍ Location of Exp. And Contraction Joints							
❍ Section Location Labels							
❍ Footing Steps							
❍ Wingwall Length							
❍ Outline of Approach Slab Behind Wingwall							
• *Section*							
❍ Proposed Ground							
❍ Existing Ground							
❍ Outline of New and Existing Wingwall							
❍ Elevations							
❍ Structural Fill							
❍ Piles/ Drilled Shafts							
❍ Existing and Proposed Utilities							

Final Plan Tasks - Cont.	Y	N	N/A	Designer Checker Reviewer		DATE	
Wingwall Masonry Cont.							
❍ Weepers				Comments:			
❍ Architectural Treatment							
❍ All dimensions required to construct the wingwall							
❍ Approach Slab							
❍ Pay Limits for Excavation and Backfill							
❍ Channel Excavation and Protection Pay Limits							
• *Architectural Treatment Details*							
Wingwall Reinforcement						DATE	
❍ Outline of Wingwall				Comments:			
❍ Working Line and CL Construction Line							
❍ Working Points Labeled							
❍ Section Location Labels							
❍ Layout of Reinforcement Steel							
❍ Label and Dimension Reinforcing Steel							
❍ Footing Steps							
❍ Phase Construction Locations Labeled							
❍ Identify Mechanical Connections							
❍ Label Lap Splices							
❍ Sections of Wingwalls							
❍ Dimension J-bar Height from Top of Footing							
Pier Masonry						DATE	
• *Plan*				Comments:			
❍ North Arrow							
❍ Outline Pier							
❍ Working Line and CL Construction Line							
❍ Working Points Labeled							
❍ Angle of Crossing							
❍ All dimensions and angles required to construct the pier tied to the centerline of bearings and working line							
❍ Outline of Beam Seats							
❍ Label Beam Numbers							
❍ Location of Construction Joints							
❍ Phase Construction Location							
• *Elevation*							
❍ Proposed Ground							
❍ Existing Ground							
❍ Outline of New and Existing Pier							
❍ Elevations							
❍ Structural Fill							
❍ Phase Construction Location							
❍ Piles/ Drilled Shafts							
❍ Existing and Proposed Utilities							
❍ Architectural Treatment							
❍ Location of Construction Joints							
❍ Location of Exp. And Contraction Joints							
❍ Section Location Labels							
❍ Footing Steps							
❍ Cofferdams							

Final Plan Tasks - Cont.	Y	N	N/A	Designer Checker Reviewer		DATE	
Pier Masonry Cont.							
❍ Piles/ Drilled Shafts				Comments:			
❍ Tremie Seal							
❍ Wash requirements of bridge seat							
• *Section*							
❍ Proposed Ground							
❍ Existing Ground							
❍ Outline of New and Existing Pier							
❍ Elevations							
❍ Structural Fill							
❍ Piles/ Drilled Shafts							
❍ Existing and Proposed Utilities							
❍ Architectural Treatment							
❍ Cofferdams							
❍ Piles/ Drilled Shafts							
❍ Tremie Seal							
❍ Vent Elevation							
❍ Bottom of Tremie Seal Elevation							
❍ Wash requirements of bridge seat							
• *Section of Pier Armor*							
• *Anchor Bolt Layout Detail*							
❍ Outline of pedestal							
❍ Outline of masonry plate							
❍ Centerline of bearings							
❍ Centerline of beam							
❍ All dimensions necessary to set the anchor bolts tied to the centerline of bearings and the centerline of beam							
Pier Reinforcement						DATE	
❍ Outline of Pier				Comments:			
❍ Working Line and CL Construction Line							
❍ Working Points Labeled							
❍ Section Location Labels							
❍ Layout of Reinforcement Steel							
❍ Label and Dimension Reinforcing Steel							
❍ Footing Steps							
❍ Phase Construction Locations Labeled							
❍ Identify Mechanical Connections							
❍ Label Lap Splices							
❍ Section of Pier							
❍ Dimension J-bar Height from Top of Footing							
• *Typical Tie Bar Detail*							
• *Seismic Reinforcing Details*							
Bridge Bearings						DATE	
• *Bearing Assembly Plan and Sections*				Comments:			
❍ Sole and masonry plate details							
❍ Elastomeric internal plate size and number of elastomer layers							
❍ Indicate each bearing location and number req'd							

Final Plan Tasks - Cont.	Y	N	N/A	Designer Checker Reviewer		DATE	
Bridge Bearings Cont.							
❍ All dimensions and angles necessary to fabricate the steel plates tied to the centerline of bearings and the centerline of beam				Comments:			
❍ Anchor bolt size and embedment length							
• *Anchor Bolt Detail*							
• *Bridge Bearing Notes*							
• *Steel Keeper Assembly Detail*							
Superstructure Framing Plan & Details						DATE	
• *Framing Plan*				Comments:			
❍ North Arrow							
❍ Working Line and CL Construction Line							
❍ Layout of Proposed Beams							
❍ Number Beam Lines							
❍ Angle of Crossing							
❍ CL of Bearings							
❍ Working Points Labeled							
❍ Beam spacing dimensioned and tied to CL Construction							
❍ K-Frame Spacing							
❍ Field splice location tied to centerline of bearing station							
❍ Bearing and Intermediate Stiffeners							
❍ Drip Bars							
❍ Proposed Utilities							
❍ Proposed Utility Support Spacing							
❍ Phase Construction Locations							
• *Deck Placement Sequence*							
• *Curved girder diaphragm spacing table*							
Beam Details						DATE	
• *Girder Web Layout*				Comments:			
• *Girder Elevation & Shear Connector Layout*							
• *Connection Plate and Bearing Stiffener Details*							
• *Shop Splice Flange Transition Detail*							
• *Shop Web Splice Details*							
• *Shear Connector Detail*							
• *Camber Table & Diagram*							
• *Field Splice Details*							
• *Typical K-Frame Detail*							
• *Abutment K-Frame and Drip Bar Detail*							
• *Pier K-Frame Detail*							
• *Flange Width Transition Detail*							
Typical Deck Section & Details						DATE	
• *Typical Deck Section*				Comments:			
❍ Overall width of structure							
❍ Working Line and CL Construction Line							
❍ Bridge, lane, shoulder, and curb width							
❍ Cross Slope in Percent							
❍ Superelevation Rate							
❍ Proposed Bridge Rail							
❍ Limits of Sealer							
❍ Conduits/ Utilities on Bridge							
❍ Girder Type, Number and Spacing							

Final Plan Tasks - Cont.	Y	N	N/A	Designer / Checker / Reviewer		DATE	
Typical Deck Section & Details Cont.							
❍ Closure Pour				Comments:			
❍ Phase Construction							
❍ Temporary Barrier Locations							
❍ Overlay Type and Depth							
❍ Deck Depth							
❍ Curb Reveal							
❍ Outside Curb Depth							
❍ Item Numbers							
❍ Limits of sawcut grooving							
❍ Overhang dimensioned							
❍ Typical Intermediate Bay							
❍ Typical Bay at Piers							
❍ Typical Bay at Abutments							
❍ Sidewalk Width and Slope							
• *Table for Elevations at Bottom of Concrete Deck Slab*							
• *Haunch Detail*							
• *Abutment Fixed Joint Detail*							
Reinforcement Deck Section & Details						DATE	
• *Plan*				Comments:			
❍ North Arrow							
❍ Working Line and CL Construction Line							
❍ Angle of Crossing							
❍ CL of Bearings							
❍ Outline of Concrete Deck							
❍ Outline of Bridge Rail Post Base Plates							
❍ Outline of Deck Haunch							
❍ Layout of Reinforcement Steel							
❍ Label and Dimension Reinforcing Steel							
❍ Phase Construction Locations Labeled							
❍ Identify Mechanical Connections							
❍ Label Lap Splices							
❍ Section A-A taken transversely through center of the slab							
❍ Conduits/ Utilities on Bridge							
❍ Utility Pull-out Boxes							
• *Section A-A*							
• *Section at Abutments*							
Approach Slabs						DATE	
• *Plan*				Comments:			
❍ North Arrow							
❍ Working Line and CL Construction Line							
❍ Angle of Crossing							
❍ CL of Bearings							
❍ Outline of Approach Slab and Seat							
❍ Length and width of approach slabs and sleeper slabs							
❍ Layout of Reinforcement Steel							
❍ Label and Dimension Reinforcing Steel							
❍ Phase Construction Locations Labeled							
❍ Identify Mechanical Connections							
❍ Label Lap Splices							

Final Plan Tasks - Cont.	Y	N	N/A	Designer / Checker / Reviewer		DATE	
Approach Slabs Cont.							
❍ Section A-A taken longitudinal through the slab				Comments:			
❍ Conduits/ Utilities on Bridge							
• *Section A-A*							
❍ Dimension Length, Thickness, Haunch							
❍ Slope in Percentage							
❍ Sleeper Slab							
❍ Layout of Reinforcement Steel							
❍ Label and Dimension Reinforcing Steel							
• *Section at Curb*							
Expansion Joint Details						DATE	
				Comments:			
Rail and Curb Layout						DATE	
				Comments:			
Bridge Rail						DATE	
				Comments:			
Bridge Approach Rail						DATE	
				Comments:			
Reinforcing Schedules						DATE	
				Comments:			
Final Estimate						DATE	
• *Title Block w/ project name, number, location, bridge number, & date*				Comments:			
• *Based on construction cost estimate*							
• *Final quantities in estimate are in agreement with tabulated quantities shown on the plans.*							
Load Rating Summary (Form 4) and Computations						DATE	
• *Load Rating Summary (Form 4) Completed*				Comments:			
• *PE Stamp and Signature on Form 4*							
• *All load ratings shown on the Form 4 are in agreement with the load rating computations*							
• *Project name and number indicated on both the load rating computations and Form 4*							

Final Plan Tasks - Cont.	**Y**	**N**	**N/A**	**Designer Checker Reviewer**		**DATE**	
Calculation Books - Design							
• *Analysis & Design of Bridge Structural Components*				Comments:			
• *Documentation of Work*							
❍ Hand Calculations							
❍ Computer Output							
❍ Detailed Notes							
❍ Quantity Calculations							

Located at:
http://www.nh.gov/dot/org/projectdevelopment/bridgedesign/sampleplans/index.htm

BRIDGE DESIGN CONSTRUCTABILITY CHECKLIST

New Hampshire DOT Department of Transportation

PROJECT INFORMATION

- Project Name:
- Project No:
- Bridge No.:
- Location:
- Designer:
- Checker:
- Drafter:
- Reviewer:

- NOTE: Each item, when applicable, is Checked (Y, N, N/A), Dated and Initialed by the Designer, Checker, and Reviewer.

Description	Yes	No	N/A	More Info Needed	Designer Checker Reviewer	DATE
1. Biddability The clarity of the final plan and proposal to the bidders so a fair and accurate bid is submitted.						
Are bidders unnecessarily restricted in their bids, or has appropriate degree of flexibility been included in the bidding documents?						
Information sufficient to avoid major field changes?						
Permits identified and sufficient time allowed to obtain?						
Contract Plans adequate?						
Contract Plans too restrictive?						
Items appropriate?						
Items omitted?						
Cross referencing between various contract documents consistent?						
2. Buildability The accuracy and completeness of the contract plans so the design can be built as shown on the final plans.						
A. Site Investigation						
Sufficient field investigation done to ascertain that contract work can be performed as shown on plans?						
Subsurface exploration?						
Utility investigation?						
Current Traffic counts?						
Structural inspection?						
Emergency/ interim structural repairs been considered?						

*Checklist is to be used as a general guide. The list is **not** all inclusive.*

Description	Yes	No	N/A	More Info Needed	Designer Checker Reviewer	DATE
B. Right of Way						
Equipment, material, and hazardous waste storage?						
Staging?						
Access to work areas?						
Adequate ROW to erect beams?						
C. Construction Phasing						
Phased to provide minimum number of stages and reasonable work areas and access?						
Are there areas with restricted access?						
Does phasing cause special conditions (i.e. structural adequacy/ stability)?						
Proposed adjacent contracts, restrictions, constraints identified and accounted for?						
Can the details as shown on the plans be constructed using standard industry practices, operations, and equipment?						
D. Traffic Control						
Requirements realistic for site conditions						
Are lane closures reasonable for traffic volumes?						
Can construction operations be carried out safely under plan traffic control and phasing?						
Design adequate for averting delays/ congestion?						
Is a detour necessary for averting delays/ congestion?						
E. Schedule						
Is sequence of construction reasonable?						
Seasonal limits on construction operations?						
Utility relocation schedule reasonable?						
Regulatory permit restrictions?						
Materials ordering, fabrication, and delivery requirements						
All necessary construction operations identified?						
Impact of additional work?						
Time related specs - completion/ milestone realistic?						

Description	Yes	No	N/A	More Info Needed	Designer Checker Reviewer	DATE
F. Special Materials / Conditions						
Pertinent provisions and restrictions clearly indicated?						
Any special (unique/ proprietary) materials, methods of technologies required for contract?						
Special coordination required, RR, Permits, Regulatory?						
Presence of asbestos, hazardous waste or toxic materials?						
Safety requirements, fall protection, electric lines, and other utilities, RR requirements?						
Winter concreting and the schedule for delivery of concrete?						

Page intentionally left blank.

New Hampshire DOT
Department of Transportation

Bridge Design Manual

Chapter 11 – Appendix B

January 2015 – v 2.0

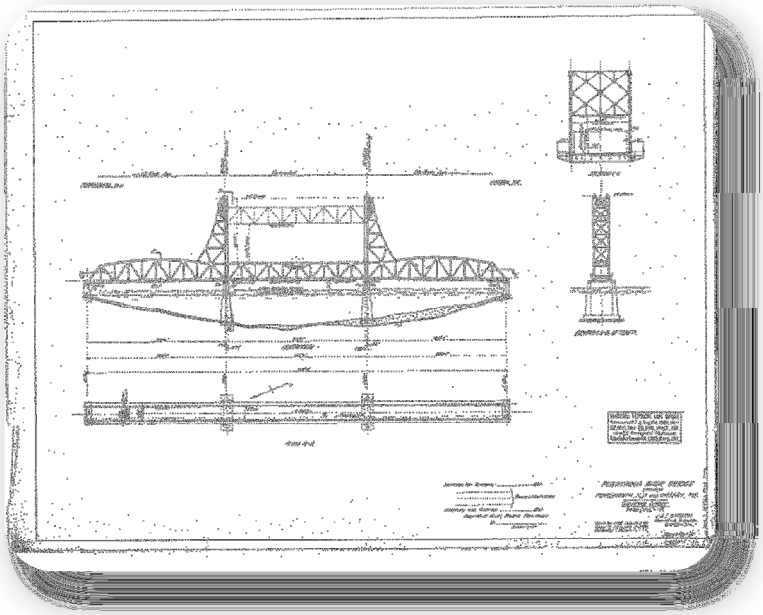

Page intentionally left blank.

WORKING POINT COORDINATES		
WP	NORTH	EAST
1	236842.440	806270.015
2	236852.854	806283.293
3	236879.106	806274.709
4	236906.233	806265.839
5	236926.472	806249.966
6	236888.341	806315.738
7	236881.938	806307.574
8	236855.185	806316.321
9	236828.097	806325.179
10	236807.858	806341.052

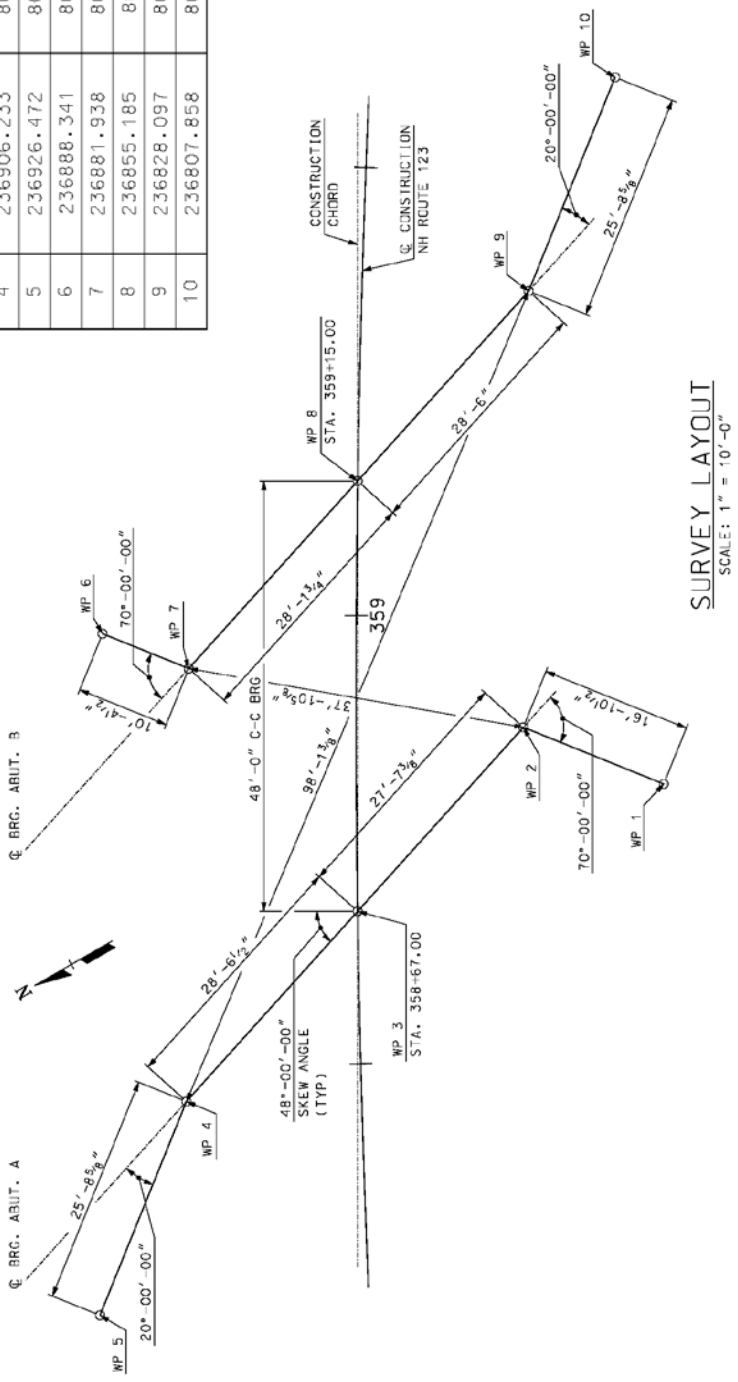

SAMPLE PLAN

Page intentionally left blank.

New Hampshire DOT
Department of Transportation

Bridge Design Manual

Chapter 11 – Appendix C

January 2015 – v 2.0

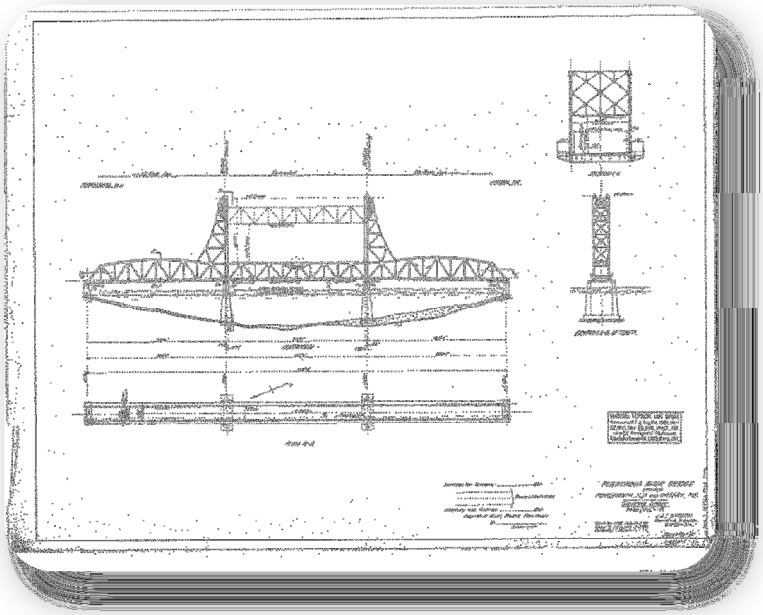

Page intentionally left blank.

Edmund Gunter

Edmund Gunter was born in Hertfordshire, England in 1581. He was a mathematician who invented many useful measuring devices, including a forerunner of the slide rule.

He was educated on the royal foundation of Westminster school, and in 1599 was elected a student of Christ Church, Oxford. After graduating bachelor and master of arts, he became a preacher in 1614, and in November, 1615, proceeded to the degree of bachelor in divinity. Mathematics, however, which had been his favorite study in youth, continued to engross his attention, and on March 6, 1619, he was appointed to the professorship of astronomy in Gresham College, London, a post he held until his death.

Gunter published seven figure tables of logarithms of sines and tangents in 1620 in *Canon Triangulorum*, or Table of Artificial Sines and Tangents. The words cosine and cotangent are due to him. He made a mechanical device, Gunter's scale, to multiply numbers based on the logs using a single scale and a pair of dividers.

He also invented Gunter's chain which was 22 yards long with 100 links. 66 feet or 22 yards is the length of a cricket pitch. The acre, defined as ten square chains, was approximately the amount of land tillable by one man behind an ox in one day. This explains its definition of in terms of the non-square one-Chain by one-furlong (660 feet or 10 chains) parcel of land; a long narrow strip of land is more efficient to plough than a square plot, since the plough does not have to be turned so often.

Gunter also did important work on navigation, publishing *New Projection of the Sphere* in 1623. He died December 10, 1626.

Reference:
http://www.todayinsci.com/12/12_10.htm#death
http://www.britannica.com/EBchecked/topic/249527/Edmund-Gunter

Page intentionally left blank.