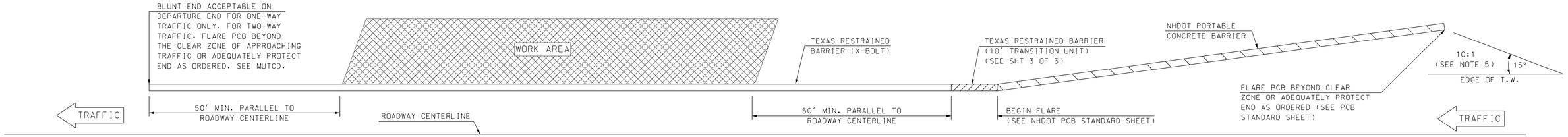

TRAFFIC OR TRAFFIC

(SEE NOTE ABOVE)

PLAN - BARRIER LAYOUT

(NTS)

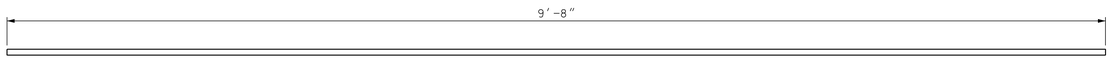

#5T4

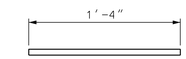

#5T7

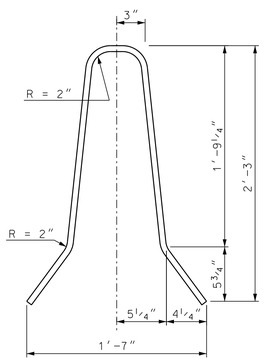

#5T1

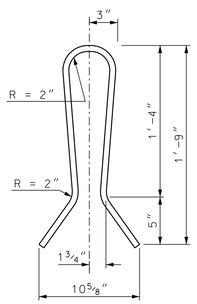

#5T2

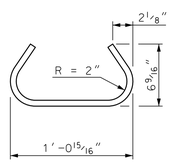

#5T3

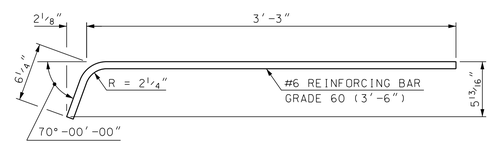

#6T5 ¬

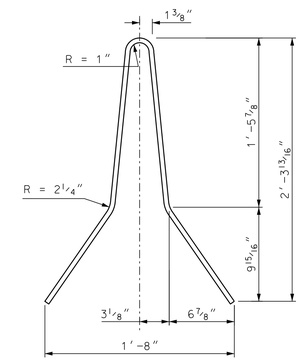

#4T6

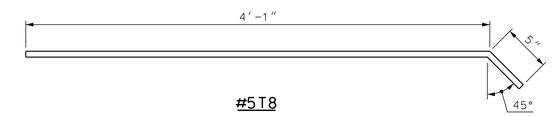

#5T8

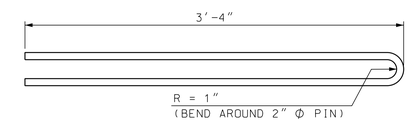

#6T9

BENDING SCHEDULE

SCALE: 1 1/2" = 1'-0"

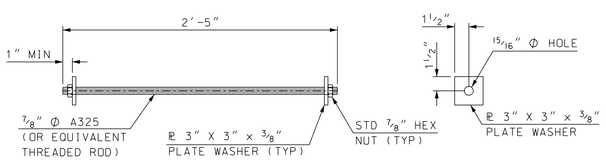

CONNECTION BOLT OR THREADED ROD DETAILS

SCALE: 1 1/2" = 1'-0"

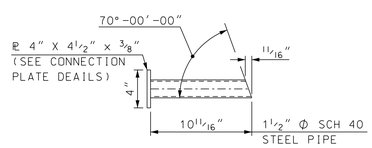

UPPER CONNECTION PIPE DETAIL

SCALE: 1 1/2" = 1'-0"

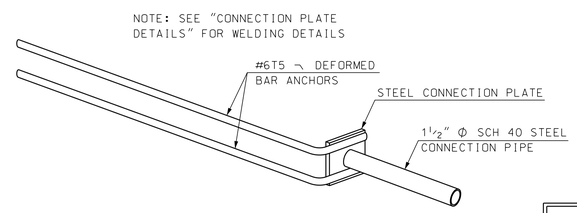

ISOMETRIC VIEW OF TYPICAL WELD ASSEMBLY

SCALE: N.T.S.

REBAR SCHEDULE TEXAS X-BOLT (10' BARRIER)			
MK		QTY	LENGTH
T1	#5	17	5'-2"
T2	#5	2	4'-0"
T3	#5	19	2'-1"
T4	#5	8	9'-8"
T5	#6	8	3'-9"

REBAR SCHEDULE TRANSITION (10' BARRIER)			
MK		QTY	LENGTH
T1	#5	9	5'-2"
T2	#5	1	4'-0"
T3	#5	10	2'-1"
T4	#5	8	9'-8"
T5	#6	4	3'-9"
T6	#4	4	5'-2"
T7	#5	4	1'-4"
T8	#5	2	4'-6"
T9	#6	3	6'-10"

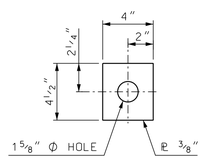

PLATE DIMENSIONS

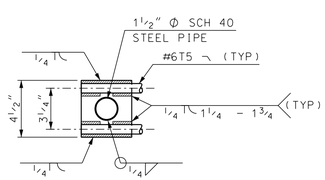

WELDING DETAILS

CONNECTION PLATE DETAILS

SCALE: 2" = 1'-0"

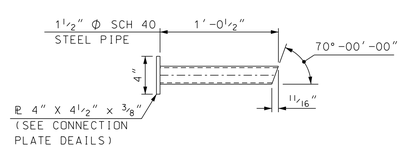

LOWER CONNECTION PIPE DETAIL

SCALE: 1 1/2" = 1'-0"

ONLY FOR USE WITH HIGHWAY STANDARD PLAN GR-23, PCB NCHRP 350

SEE NOTICE TO CONTRACTORS "SUNSETTING OF NON-MASH PCB ON THE NHS"

NO MODIFICATIONS SHOULD BE MADE TO THIS SHEET

STATE OF NEW HAMPSHIRE

DEPARTMENT OF TRANSPORTATION * BUREAU OF BRIDGE DESIGN

TOWN XX BRIDGE NO. XXX\XXX STATE PROJECT XX

LOCATION XX

TEXAS RESTRAINED BARRIER (X-BOLT) (2 OF 3)

REVISIONS AFTER PROPOSAL		BY	DATE		BY	DATE
	DESIGNED	TXDOT	12/10	CHECKED	NHDOT	4/18
	DRAWN	GMC	1/18	CHECKED	NHDOT	4/18
	QUANTITIES	XXX	XX/XX	CHECKED	XXX	XX/XX

ISSUE DATE	5/15/18	FEDERAL PROJECT NO.	SHEET NO.
REV. DATE	6/1/20	----------	

BRIDGE SHEET XX OF XX

FILE NUMBER XX-X-X

TOTAL SHEETS

SUBDIRECTORY	.DGN LOCATOR	SHEET SCALE
standard\english\barrier	X-Bolt Barrier	AS NOTED

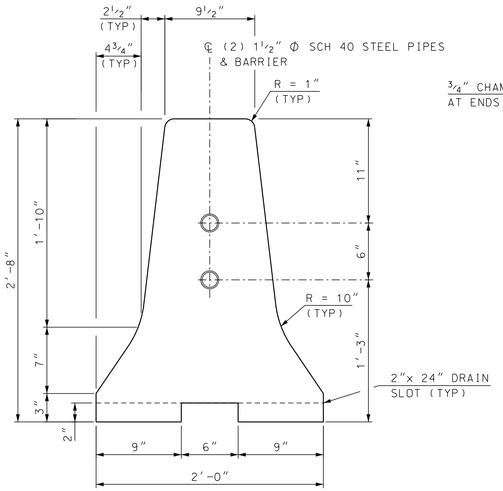

END VIEW

SCALE: 1 1/2" = 1'-0"

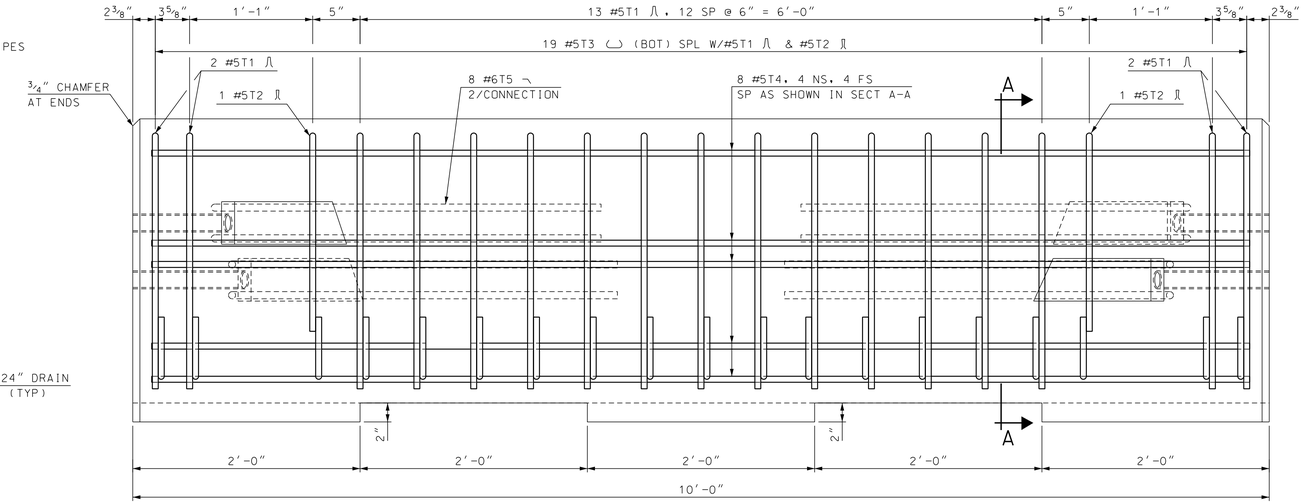

ELEVATION

SCALE: 1 1/2" = 1'-0"

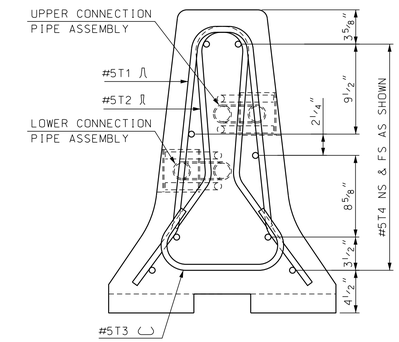

SECTION A-A

SCALE: 1 1/2" = 1'-0"

NOTE: CONNECTION HARDWARE SHALL NOT EXTEND BEYOND THE CONCRETE FACE OF BARRIER

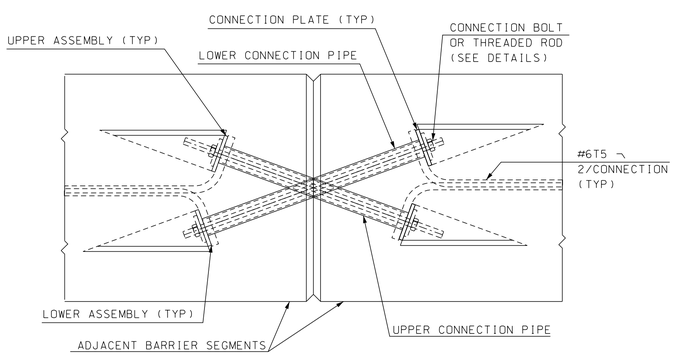

TYPE X JOINT CONNECTION DETAILS

SCALE: 1 1/2" = 1'-0"

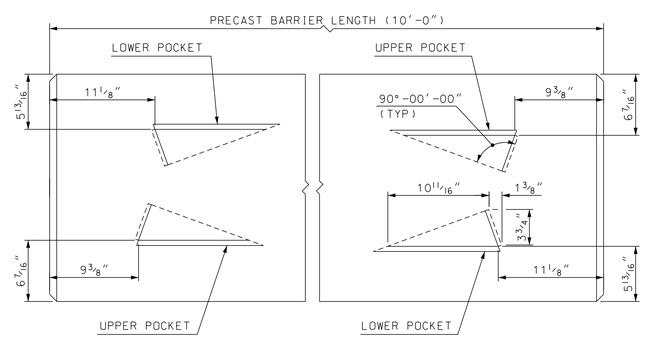

TOP VIEW CONNECTION POCKETS

SCALE: 1 1/2" = 1'-0"

GENERAL NOTES:

1. PORTABLE CONCRETE BARRIER SHALL BE FURNISHED BY THE CONTRACTOR AND PAID FOR AS ITEM 606.41741, PORTABLE CONCRETE BARRIER FOR TRAFFIC CONTROL (BRIDGE). CONCRETE BARRIER AND ALL ATTACHMENTS SHALL BE FABRICATED IN ACCORDANCE WITH SPECIAL PROVISIONS. ALL BARRIER UNITS SHALL BE 10' LONG.
2. PORTABLE CONCRETE BARRIER DETAILS, AS SHOWN ON THESE PLANS, ARE IN COMPLIANCE WITH REQUIREMENTS PER UPDATED NCHRP REPORT 350 FOR TEST NO 3-11 (MASH TEST LEVEL 3), CRASH TESTED BY TEXAS A&M UNIVERSITY SYSTEM, MAY 2005, AND ACCEPTED PER REPORT FHWA/TX-05/0-4692-1.
3. THE BARRIER HAS BEEN CRASH TESTED WITH A 27" DYNAMIC DEFLECTION WHICH WILL ALLOW THE BARRIER TO BE PLACED A MINIMUM 12" FROM THE EDGE OF THE DECK.
4. USAGE OF THE TEXAS X-BOLT BARRIER REQUIRES A MINIMUM OF 100 LINEAR FEET (10 - 10' UNITS). THE X-BOLT BARRIER SHALL EXTEND A MINIMUM OF 50' BEYOND THE BRIDGE AT EACH END, PARALLEL TO THE ROADWAY CENTERLINE. THE ENDS OF THE BARRIER SHALL CONNECT TO THE TRANSITION UNIT AND THEN TO NHDOT PCB FLARED OUT THE REQUIRED CLEAR ZONE AS SHOWN ON SHEET 2 OF 3.
5. THE CONNECTION BOLTS AT THE BARRIER JOINTS SHALL BE TIGHTENED TO THE "TURN OF THE NUT" METHOD IN ACCORDANCE WITH SECTION 550.3.11.6.4 OF NHDOT STANDARD SPECIFICATIONS. AFTER INSTALLATION, ALL X-BOLT JOINTS SHALL BE CHECKED BY THE CONTRACT ADMINISTRATOR CONFIRMING THEY MEET THE TIGHTENED REQUIREMENT.
6. THE TEXAS X-BOLT BARRIER MAY BE INSTALLED WITH A 125' MINIMUM RADIUS OF CURVATURE AND A RELATIVE ANGLE OF 4 DEGREES BETWEEN THE 10' UNITS.
7. THE CONTRACTOR SHALL FURNISH AND INSTALL APPROVED RETROREFLECTIVE DELINEATORS AT 25-FOOT INTERVALS ALONG TOP AND/OR ONE FOOT DOWN THE SIDE OF PORTABLE CONCRETE BARRIER, SUBSIDIARY TO ITEM 606.41741 (SEE STANDARD NO. DL-1 OF NHDOT STANDARD PLANS FOR ROAD CONSTRUCTION). THE COLOR OF THE DELINEATORS SHALL, IN ALL INSTANCES, CONFORM TO THE COLOR OF THE EDGE LINE MARKINGS. DELINEATOR SUPPLEMENT, BUT DO NOT REPLACE, THE NEED FOR RETROREFLECTIVE SOLID EDGE LINE MARKINGS.

MATERIAL NOTES:

1. BARRIERS SHALL BE LIGHT COLORED CLASS AA CONCRETE, WITH COMPRESSIVE STRENGTH OF 4000 psi, AND SHALL HAVE A SMOOTH UNIFORM SURFACE FREE OF DEFECTS AND IRREGULARITIES. CASTING DATE SHALL BE SHOWN ON BARRIER. ALL EXPOSED EDGES OF CONCRETE SHALL BE CHAMFERED 3/4", UNLESS OTHERWISE NOTED.
2. ALL REINFORCING STEEL SHALL BE AASHTO M31 (ASTM A615) GRADE 60. ALL REINFORCEMENT SHALL HAVE 1 3/4" MINIMUM CLEAR COVER, UNLESS OTHERWISE NOTED.
3. CONNECTION BOLTS SHALL BE 7/8" Φ GALVANIZED HIGH STRENGTH THREADED RODS CONFORMING TO ASTM A325. STEEL PIPES, PLATE WASHERS, AND CONNECTION PLATES SHALL BE GALVANIZED ASTM A36 STEEL.
4. ALL STEEL FOR CONNECTIONS SHALL BE GALVANIZED IN ACCORDANCE WITH SECTION 550.

NO MODIFICATIONS SHOULD BE MADE TO THIS SHEET

ONLY FOR USE WITH HIGHWAY STANDARD PLAN GR-23, PCB NCHRP 350

SEE NOTICE TO CONTRACTORS "SUNSETTING OF NON-MASH PCB ON THE NHS"

BARRIER WEIGHT APPROX. 2.38 TONS

SUBDIRECTORY	.DGN LOCATOR	SHEET SCALE
standard\english\barrier	X-Bolt Barrier	AS NOTED

STATE OF NEW HAMPSHIRE

DEPARTMENT OF TRANSPORTATION * BUREAU OF BRIDGE DESIGN

TOWN XX BRIDGE NO. XXX\XXX STATE PROJECT XX

LOCATION XX

TEXAS RESTRAINED BARRIER (X-BOLT) (1 OF 3)

BRIDGE SHEET XX OF XX

FILE NUMBER XX-X-X

REVISIONS AFTER PROPOSAL		BY	DATE		BY	DATE
	DESIGNED	TXDOT	12/10	CHECKED	NHDOT	4/18
	DRAWN	GMC	1/18	CHECKED	NHDOT	4/18
	QUANTITIES	XXX	XX/XX	CHECKED	XXX	XX/XX

ISSUE DATE	5/15/18	FEDERAL PROJECT NO.	SHEET NO.	TOTAL SHEETS
REV. DATE	6/1/20	----------		

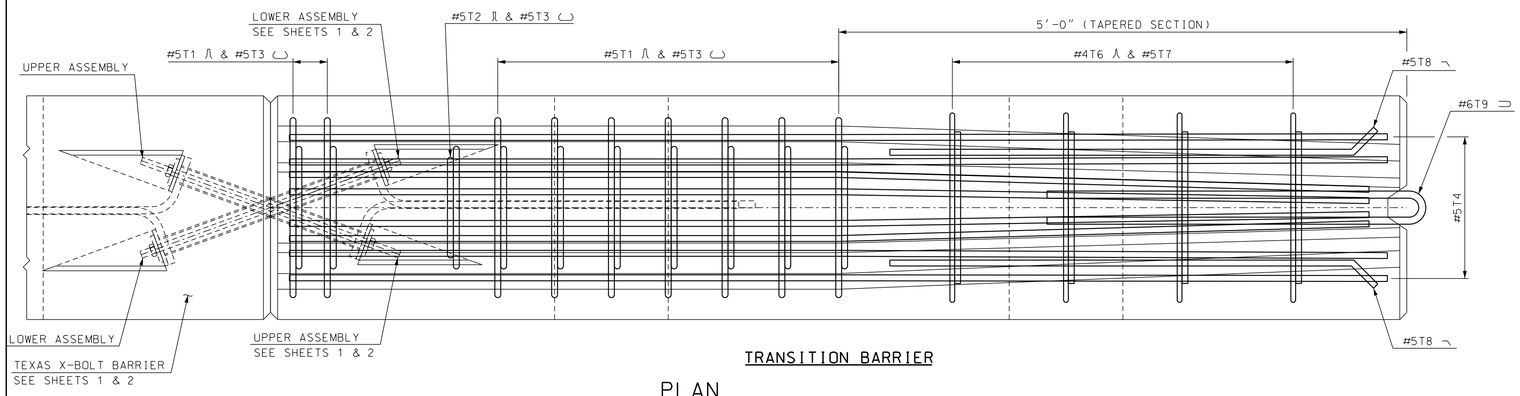

TRANSITION BARRIER

PLAN

SCALE: 1½" = 1'-0"

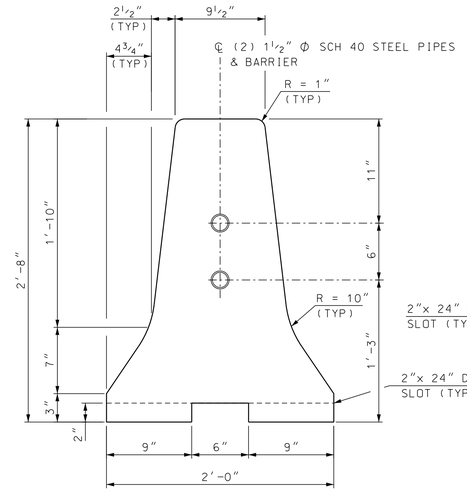

END VIEW SECTION A-A

SCALE: 1½" = 1'-0"

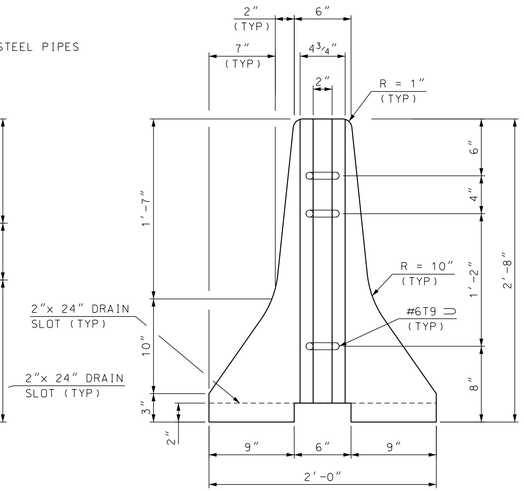

VIEW B-B

SCALE: 1½" = 1'-0"

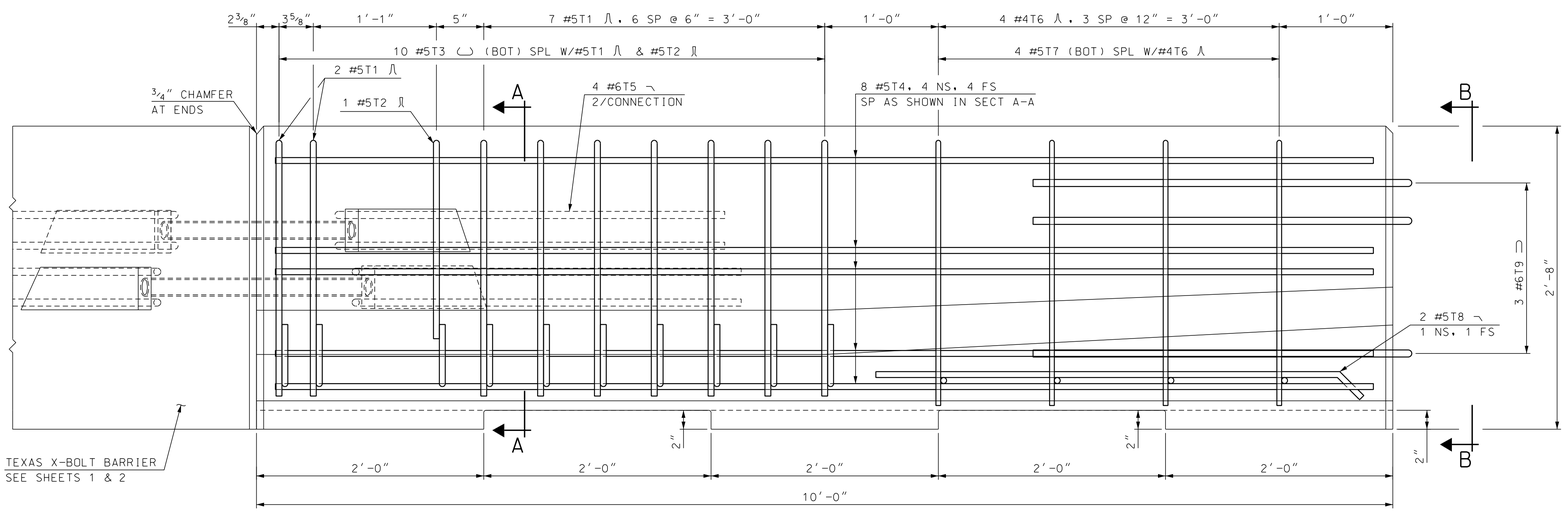

TRANSITION BARRIER

ELEVATION

SCALE: 1½" = 1'-0"

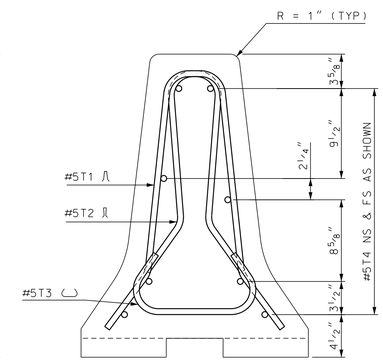

SECTION A-A

SCALE: 1½" = 1'-0"

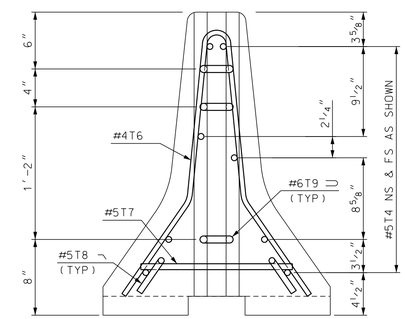

VIEW B-B

SCALE: 1½" = 1'-0"

NO MODIFICATIONS SHOULD BE MADE TO THIS SHEET

NOTES

1. TEXAS RESTRAINED BARRIER (TRANSISTION UNIT) SHALL BE PAID FOR UNDER ITEM 606.41741, PORTABLE CONCRETE BARRIER FOR TRAFFIC CONTROL (BRIDGE).
2. SEE SHEET 1 OF 3 FOR NOTES AND SHEET 2 OF 3 FOR REBAR SCHEDULE.

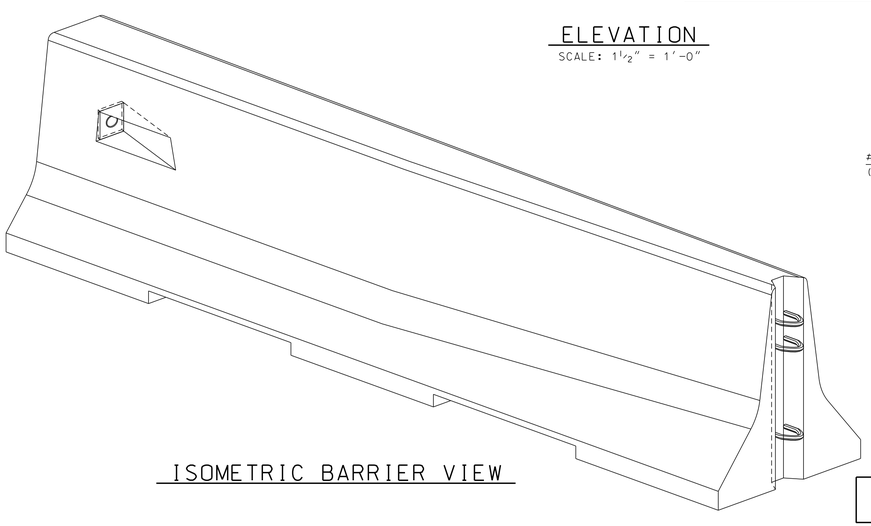

ISOMETRIC BARRIER VIEW

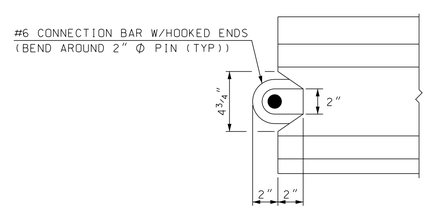

END NOTCH DETAIL (AT VIEW B-B

SCALE: 2" = 1'-0"

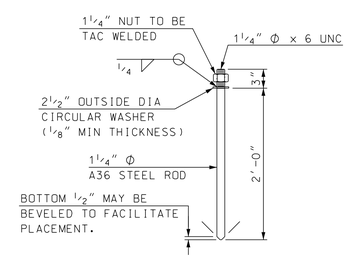

CONNECTOR PIN ASSEMBLY

SCALE: 1" = 1'-0"

BARRIER WEIGHT APPROX. 2.28 TONS

ONLY FOR USE WITH HIGHWAY STANDARD PLAN GR-23, PCB NCHRP 350

SEE NOTICE TO CONTRACTORS "SUNSETTING OF NON-MASH PCB ON THE NHS"

STATE OF NEW HAMPSHIRE
DEPARTMENT OF TRANSPORTATION * BUREAU OF BRIDGE DESIGN

TOWN XX | BRIDGE NO. XXX\XXX | STATE PROJECT XX
LOCATION XX

TEXAS RESTRAINED BARRIER (X-BOLT) (3 OF 3)

REVISIONS AFTER PROPOSAL		BY	DATE		BY	DATE
	DESIGNED	TXDOT	12/10	CHECKED	NHDOT	4/18
	DRAWN	GMC	1/18	CHECKED	NHDOT	4/18
	QUANTITIES	XXX	XX/XX	CHECKED	XXX	XX/XX
	ISSUE DATE	5/15/18	FEDERAL PROJECT NO.		SHEET NO.	TOTAL SHEETS
	REV. DATE	6/1/20	----------			

BRIDGE SHEET XX OF XX
FILE NUMBER XX-X-X

SUBDIRECTORY	.DGN LOCATOR	SHEET SCALE
standard\english\barrier	X-Bolt Barrier	AS NOTED