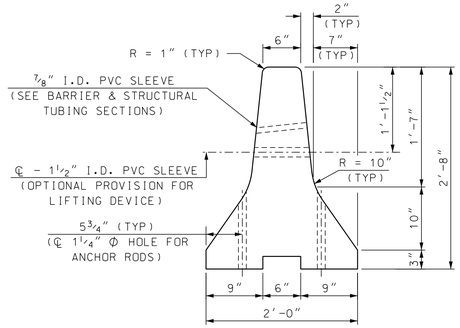


TYPICAL SECTION

SCALE: 1" = 1'-0"

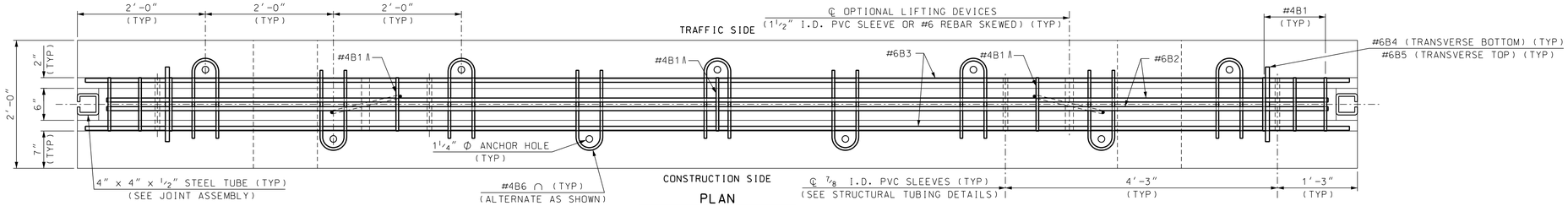


PLAN

SCALE: 1' = 1'-0"

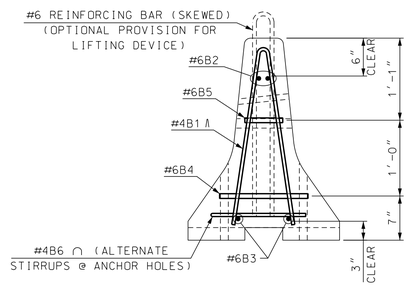


TYPICAL SECTION

SCALE: 1" = 1'-0"

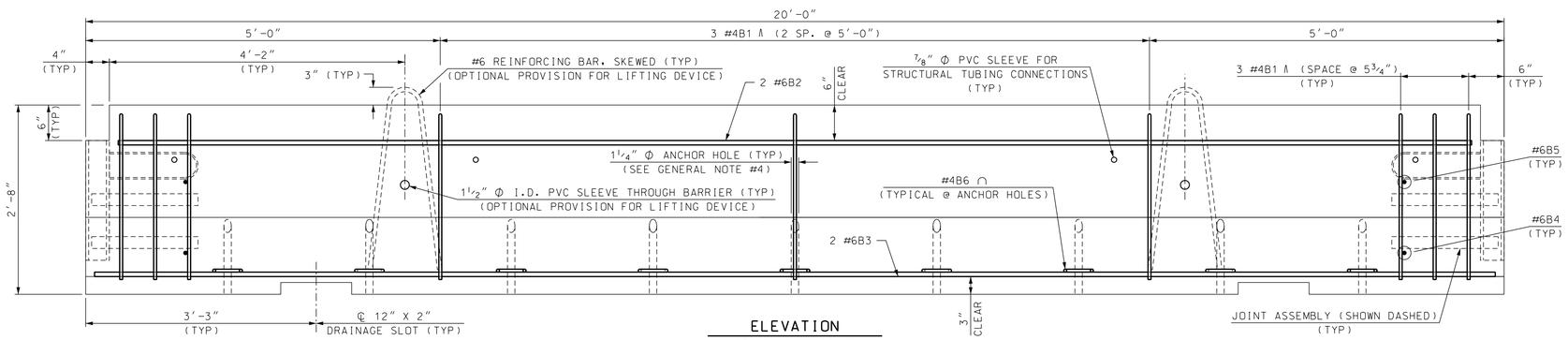


ELEVATION

SCALE: 1' = 1'-0"

## GENERAL NOTES

(1) PORTABLE CONCRETE BARRIER, INCLUDING TRANSITION UNIT, SHALL BE FURNISHED BY THE CONTRACTOR AND PAID FOR AS ITEM 606.41741 PORTABLE CONCRETE BARRIER FOR TRAFFIC CONTROL (BRIDGE). CONCRETE BARRIER AND ALL ATTACHMENTS SHALL BE FABRICATED IN ACCORDANCE WITH SPECIAL PROVISIONS. ALL BARRIER UNITS FOR BRACED SYSTEMS SHALL BE 20' LONG.

(2) PORTABLE CONCRETE BARRIER DETAILS, AS SHOWN IN THESE PLANS, ARE IN COMPLIANCE WITH REQUIREMENTS PER UPDATED NCHRP REPORT 350 FOR TEST NO. 3-11 (MASH TEST LEVEL 3), CRASH TESTED BY MIDWEST ROADSIDE SAFETY; NY BOX BEAM STIFFENING OF UNANCHORED TCB, MARCH 2008, AND ACCEPTED PER FHWA LETTER B-239 (11/1/2012). THE BARRIER SYSTEM HAS BEEN CRASH TESTED WITH A 27.6" DYNAMIC DEFLECTION WHICH WILL ALLOW BRACED BARRIER TO BE PLACED A MINIMUM 12" FROM THE EDGE OF BRIDGE DECK.

(3) A MINIMUM OF TWO BARRIER UNITS, WITH BRACED JOINTS ARE REQUIRED TO BE PLACED BEYOND BOTH ENDS OF THE BRIDGE WORK AREA, FOR SPEEDS GREATER THAN 45 MPH. FOR SPEEDS ≤ 45 MPH, A MINIMUM OF ONE BRACED BARRIER IS REQUIRED TO BE FULLY SET BEYOND EACH END OF BRIDGE WORK AREA.

(4) THE LAST CONCRETE BARRIER UNIT, AT EACH END OF BRACED BARRIER LAYOUT, SHALL BE ANCHORED A MINIMUM 18" BELOW THE ROADWAY SURFACE. REQUIRED 1" Φ ANCHOR RODS (A36 STEEL) SHALL BE INSTALLED WITH 5 ANCHORS ON THE TRAFFIC SIDE OF BARRIER AND 4 ON THE CONSTRUCTION SIDE. IF THE END(S) OF THE BRACED CONCRETE BARRIER SYSTEM EXTENDS 50' OR MORE BEYOND LIMITS OF BRIDGE WORK THE LAST BARRIER UNIT DOES NOT REQUIRE ANCHORAGE.

(5) PORTABLE CONCRETE BARRIER FOR TRAFFIC CONTROL (BRIDGE), ITEM 606.41741, MAY BE INSTALLED WITH A 230' MINIMUM RADIUS. GAPS CREATED BETWEEN STRUCTURAL TUBES AND CONCRETE BARRIER, DURING A RADIAL LAYOUT, SHALL BE SHIMMED WITH 8" x 8" x 1/2" PLATES & FENDER WASHERS TO FIRMLY ATTACH STRUCTURAL TUBING TO BARRIER.

(6) THE CONTRACTOR SHALL FURNISH AND INSTALL APPROVED RETROREFLECTIVE DELINEATORS ON EACH BARRIER OR/WITH A MAXIMUM OF 25-FOOT INTERVALS ALONG TOP AND/OR ONE FOOT DOWN THE SIDE OF PORTABLE CONCRETE BARRIER, SUBSIDIARY TO ITEM 606.41741 (SEE STANDARD NO. DL-1 OF NHDOT STANDARD PLANS FOR ROAD CONSTRUCTION). THE COLOR OF DELINEATORS SHALL, IN ALL INSTANCES, CONFORM TO THE COLOR OF EDGE LINE MARKINGS. DELINEATORS SUPPLEMENT, BUT DO NOT REPLACE, THE NEED FOR RETROREFLECTIVE SOLID EDGE LINE MARKINGS.

## MATERIAL NOTES

(1) BARRIERS SHALL BE LIGHT COLORED CLASS AA CONCRETE, WITH MINIMUM COMPRESSIVE STRENGTH OF 4000 psi, AND SHALL HAVE A SMOOTH UNIFORM SURFACE FREE OF DEFECTS AND IRREGULARTIES. CASTING DATE SHALL BE SHOWN ON BARRIER. ALL EXPOSED EDGES OF CONCRETE SHALL BE CHAMFERED 3/4", UNLESS OTHERWISE NOTED.

(2) ALL REINFORCING STEEL SHALL BE AASHTO M31 (ASTM A615) GRADE 60. ALL REINFORCEMENT SHALL HAVE 1 1/2" MINIMUM CLEAR COVER, UNLESS OTHERWISE NOTED. SEE SHEET 3 OF 3 FOR REBAR SCHEDULE.

(3) STRUCTURAL STEEL, EXCEPT THE STEEL TUBES, SHALL BE ASTM A36 OR A572. ALL STEEL SHALL BE FABRICATED IN ACCORDANCE WITH SECTION 550.

(4) STEEL TUBES, 6" x 6" x 3/16" & 4" x 4" x 1/2", SHALL BE ASTM A 500 GRADE B OR C. ALL TUBES SHALL BE GALVANIZED IN ACCORDANCE WITH SECTION 550.

(5) ALL STEEL FOR CONNECTION KEY AND TRANSITION KEY ASSEMBLIES SHALL BE GALVANIZED IN ACCORDANCE WITH SECTION 550.

(6) A MINIMUM OF 2 LIFTING DEVICES, EACH WITH THE CAPACITY TO LIFT A MASS OF 6 TONS (MINIMUM), SHALL BE INSTALLED TO EACH BARRIER UNIT.

(7) DELINEATORS SHALL BE ATTACHED TO BARRIER USING AN APPROVED ADHESIVE MATERIAL OR AS SHOWN ON THIS SHEET.

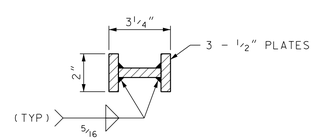


SECTION D-D

(CONNECTION KEY)

SCALE: 3" = 1'-0"

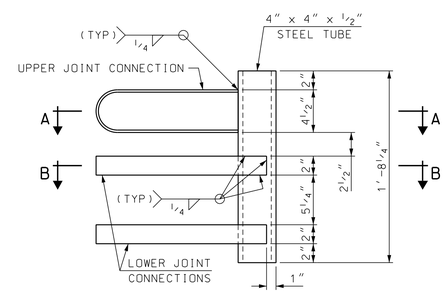


JOINT ASSEMBLY

SCALE: 1 1/2" = 1'-0"

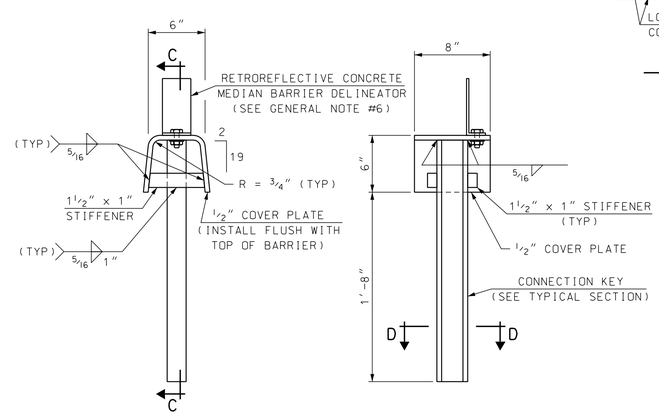


END VIEW

SECTION C-C

CONNECTION KEY ASSEMBLY DETAILS

SCALE: 1 1/2" = 1'-0"

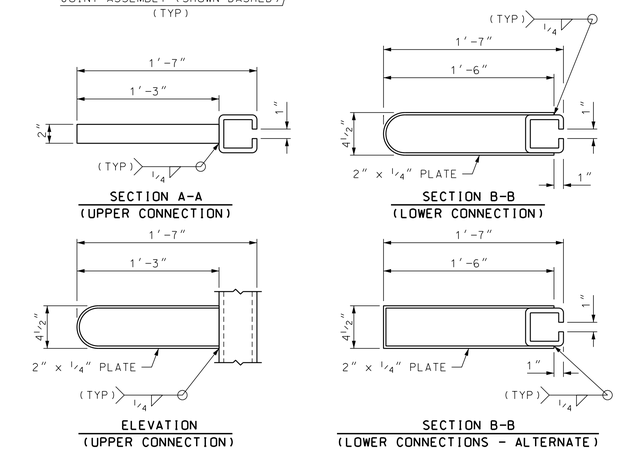


JOINT CONNECTION DETAILS

SCALE: 1 1/2" = 1'-0" (EXCEPT AS NOTED)

NO MODIFICATIONS SHALL BE MADE TO THIS SHEET

BARRIER WEIGHT APPROX. 3.94 TONS

STATE OF NEW HAMPSHIRE

DEPARTMENT OF TRANSPORTATION * BUREAU OF BRIDGE DESIGN

TOWN | BRIDGE NO. | STATE PROJECT

LOCATION

PORTABLE CONCRETE BARRIER - BRACED (1 OF 3)

BRIDGE SHEET | OF | FILE NUMBER

| REVISIONS AFTER PROPOSAL | | BY | DATE | | BY | DATE |
|---|---|---|---|---|---|---|
| | DESIGNED | NHDOT | 7/12 | CHECKED | ABH | 8/12 |
| | DRAWN | PJP | 8/12 | CHECKED | ABH | 5/20 |
| | QUANTITIES | | | CHECKED | | |
| | ISSUE DATE | 8/15/12 | FEDERAL PROJECT NO. | | SHEET NO. | TOTAL SHEETS |
| | REV. DATE | 6/1/20 | ---------- | | | |

| SUBDIRECTORY | .DGN LOCATOR | SHEET SCALE |
|---|---|---|
| English/BARRIER | CB-BRACED_Revised Transition | AS NOTED |

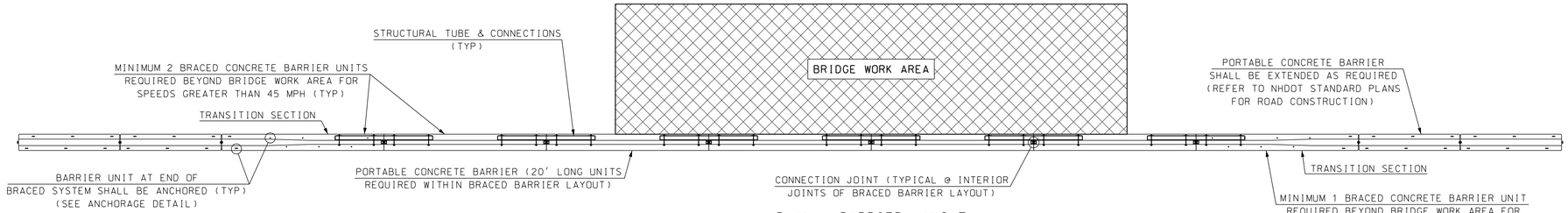


## PLAN - BARRIER LAYOUT

NOT TO SCALE

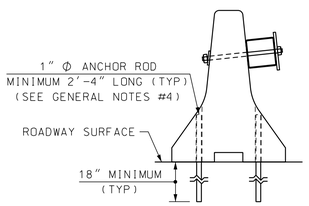


## ANCHORAGE DETAIL

SCALE: 3/4" = 1'-0"

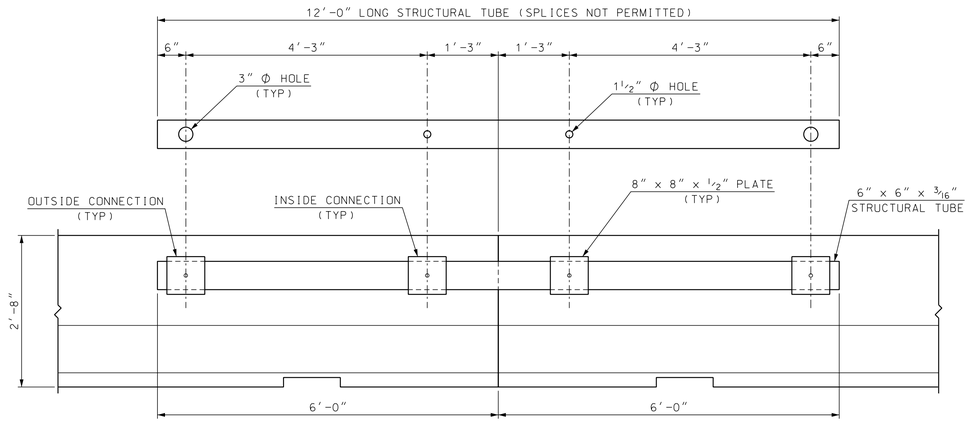


## STRUCTURAL TUBING DETAILS

SCALE: 3/4" = 1'-0"

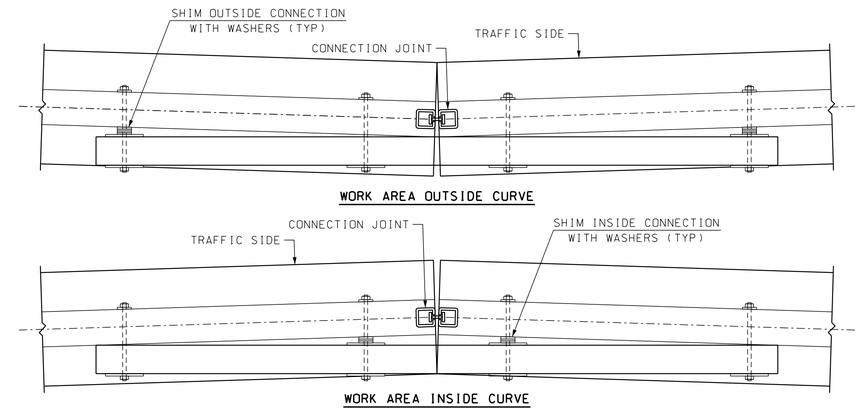


## TUBE CONNECTIONS (CURVED ALIGNMENT)

SCALE: 3/4" = 1'-0"

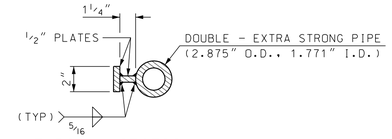


## TYPICAL SECTION

**(TRANSITION KEY)**

(ONLY REQUIRED FOR CONNECTION TO HIGHWAY PCB STANDARD PLAN GR-23 (NCHRP 350))

SCALE: 2" = 1'-0"

PVC SLEEVE OPENINGS SHALL BE MODIFIED/DRILLED AS REQUIRED TO PROPERLY ALIGN STRUCTURAL TUBE BRACING UNITS FOR CURVED ALIGNMENTS

THE PRESENCE OF NORMAL HOLES WHICH HAVE BEEN MODIFIED/DRILLED WILL NOT AFFECT THE REUSE OF CONCRETE BARRIER UNITS

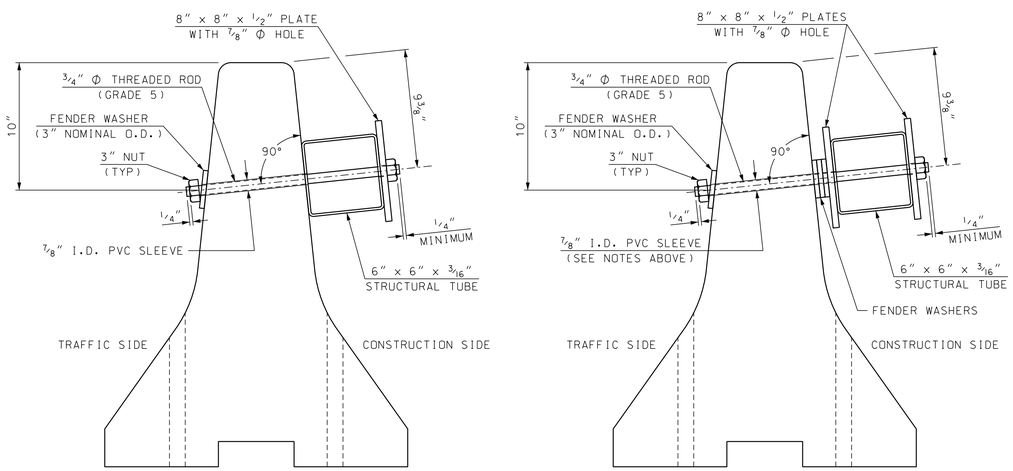


SECTION WITHOUT SHIMS

SECTION WITH SHIMS

## BARRIER & STRUCTURAL TUBING SECTIONS

SCALE: 2" = 1'-0"

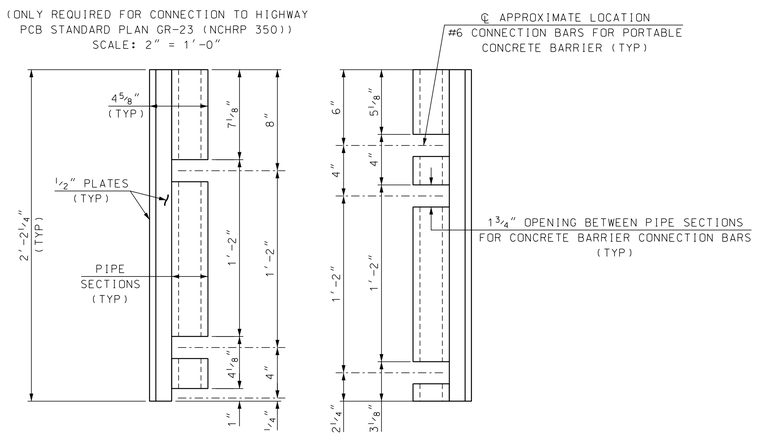


## TRANSITION KEY ELEVATIONS

(ONLY REQUIRED FOR CONNECTION TO HIGHWAY PCB STANDARD PLAN GR-23 (NCHRP 350))

SCALE: 2" = 1'-0"

NO MODIFICATIONS SHALL BE MADE TO THIS SHEET

# STATE OF NEW HAMPSHIRE

DEPARTMENT OF TRANSPORTATION * BUREAU OF BRIDGE DESIGN

TOWN | BRIDGE NO. | STATE PROJECT

LOCATION

## PORTABLE CONCRETE BARRIER - BRACED (2 OF 3)

BRIDGE SHEET OF FILE NUMBER

| REVISIONS AFTER PROPOSAL | | BY | DATE | | BY | DATE |
|---|---|---|---|---|---|---|
| | DESIGNED | NHDOT | 7/12 | CHECKED | ABH | 8/12 |
| | DRAWN | PJP | 8/12 | CHECKED | ABH | 8/12 |
| | QUANTITIES | | | CHECKED | | |
| | ISSUE DATE | 8/15/12 | FEDERAL PROJECT NO. | | SHEET NO. | TOTAL SHEETS |
| | REV. DATE | 6/1/20 | ---------- | | | |

| SUBDIRECTORY | .DGN LOCATOR | SHEET SCALE |
|---|---|---|
| English/BARRIER | PCB-BRACED_Revised Transition | AS NOTED |

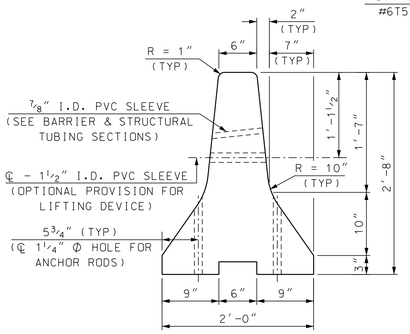


SECTION A-A
SCALE: 1" = 1'-0"

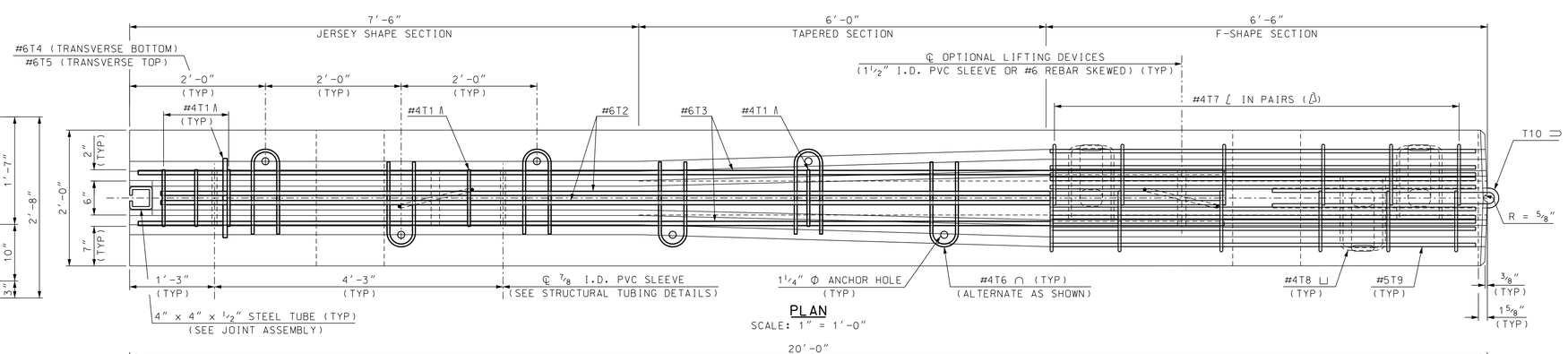


PLAN
SCALE: 1" = 1'-0"

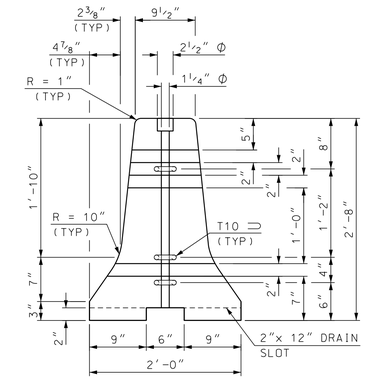


VIEW B-B
SCALE: 1" = 1'-0"

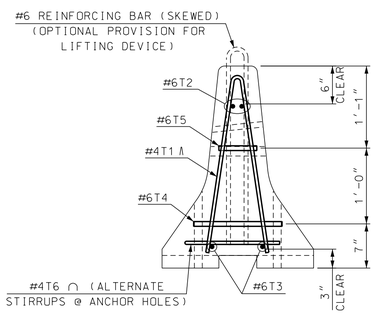


SECTION A-A
SCALE: 1" = 1'-0"

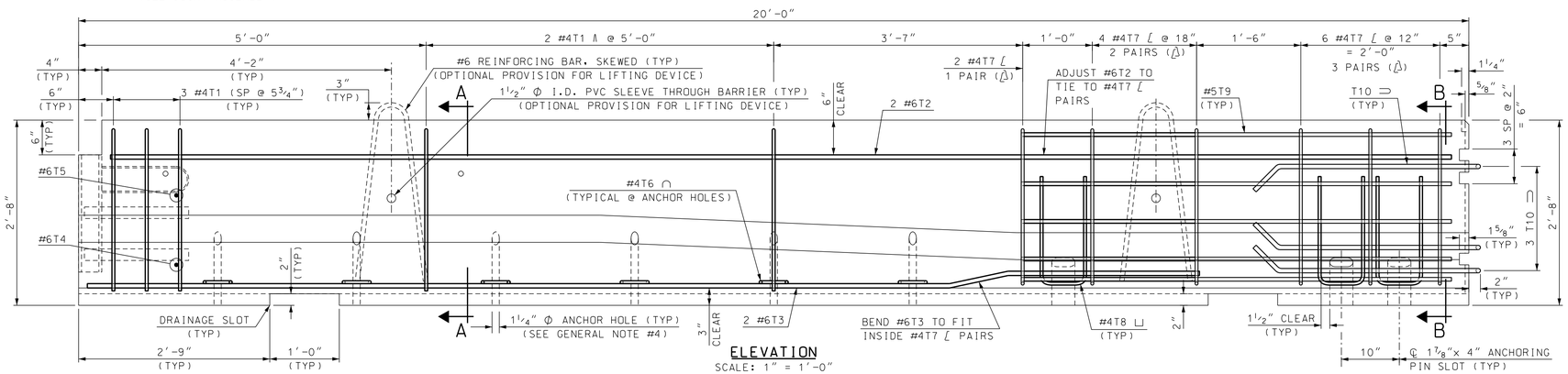


ELEVATION
SCALE: 1" = 1'-0"

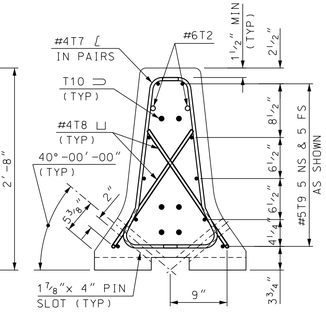


VIEW B-B
SCALE: 1" = 1'-0"

| REBAR SCHEDULE BRACED BARRIER (20' BARRIER) | | | |
|---|---|---|---|
| MK | | QTY | LENGTH |
| | | | |
| B1 | #4 | 9 | 4'-10" |
| B2 | #6 | 2 | 19'-1" |
| B3 | #6 | 2 | 19'-9" |
| B4 | #6 | 2 | 1'-2" |
| B5 | #6 | 2 | 6" |
| B6 | #6 | 9 | 2'-11" |

| REBAR SCHEDULE TRANSITION (20' BARRIER) | | | |
|---|---|---|---|
| MK | | QTY | LENGTH |
| | | | |
| T1 | #4 | 5 | 4'-10" |
| T2 | #6 | 2 | 19'-3" |
| T3 | #6 | 2 | 16'-0" |
| T4 | #6 | 2 | 1'-2" |
| T5 | #6 | 2 | 6" |
| T6 | #4 | 6 | 2'-11" |
| T7 | #4 | 12 | 3'-4" |
| T8 | #4 | 3 | 4'-5" |
| T9 | #5 | 10 | 6'-3" |

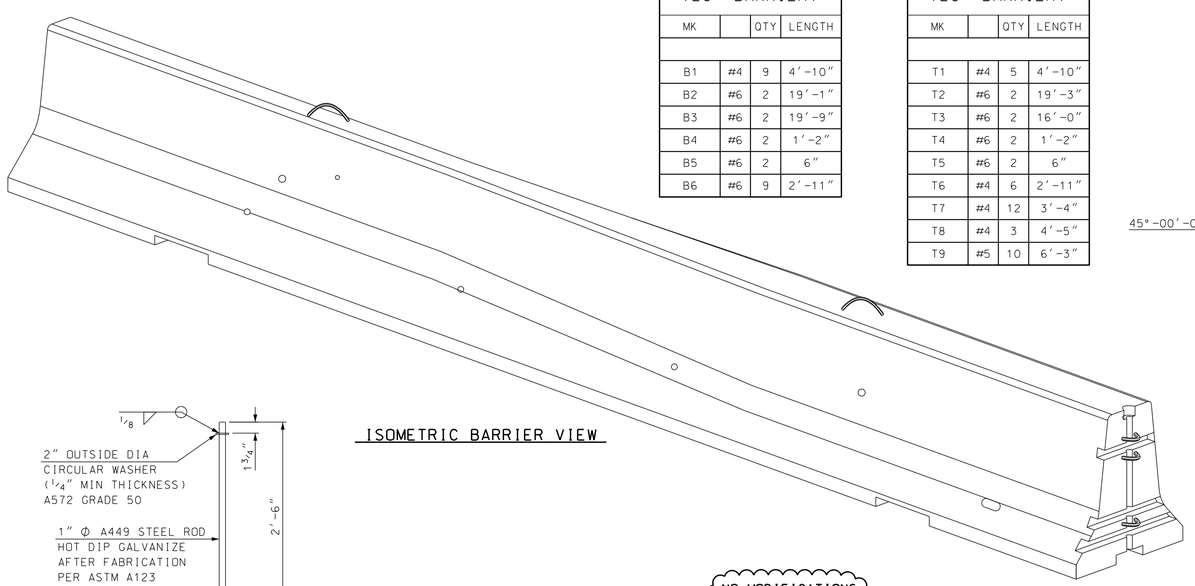

ISOMETRIC BARRIER VIEW

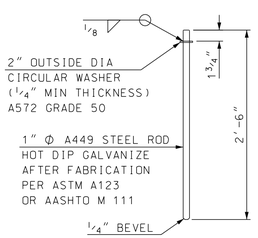


LINKING PIN ASSEMBLY
SCALE: 1" = 1'-0"

NO MODIFICATIONS SHALL BE MADE TO THIS SHEET

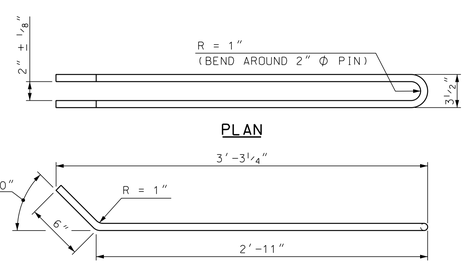


ELEVATION
T8 LOOP BAR

3/4" DIA. LOOP BARS (ASTM A36)
(3 BARS, 7'-2" LENGTH/BAR)
(HOT DIP GALVANIZED AFTER FABRICATION
PER ASTM A123 OR AASHTO M11)

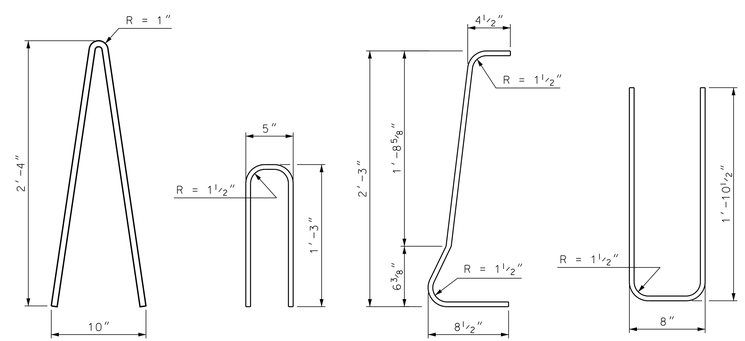


#4B1 & #4T1 #4B6 & #4T6 #4T7 #4T9

BENDING SCHEDULE
SCALE: 1 1/2" = 1'-0"

BARRIER WEIGHT APPROX. 4.30 TONS

NOTE: TRANSITION PIECE FOR USE WITH HIGHWAY PCB STANDARD PLAN NO. GR-24 & 25 (MASH 16)

| SUBDIRECTORY | .DGN LOCATOR | SHEET SCALE |
|---|---|---|
| English/BARRIER | CB-BRACED_Revised Transition | AS NOTED |

STATE OF NEW HAMPSHIRE
DEPARTMENT OF TRANSPORTATION * BUREAU OF BRIDGE DESIGN

TOWN | BRIDGE NO. | STATE PROJECT
LOCATION

PORTABLE CONCRETE BARRIER - BRACED (3 OF 3)

BRIDGE SHEET OF FILE NUMBER

| REVISIONS AFTER PROPOSAL | | BY | DATE | | BY | DATE |
|---|---|---|---|---|---|---|
| | DESIGNED | NHDOT | 4/20 | CHECKED | NHDOT | 4/20 |
| | DRAWN | SMG | 4/20 | CHECKED | ABH | 5/20 |
| | QUANTITIES | | | CHECKED | | |
| | ISSUE DATE | 6/1/20 | FEDERAL PROJECT NO. | | SHEET NO. | TOTAL SHEETS |
| | REV. DATE | | ---------- | | | |