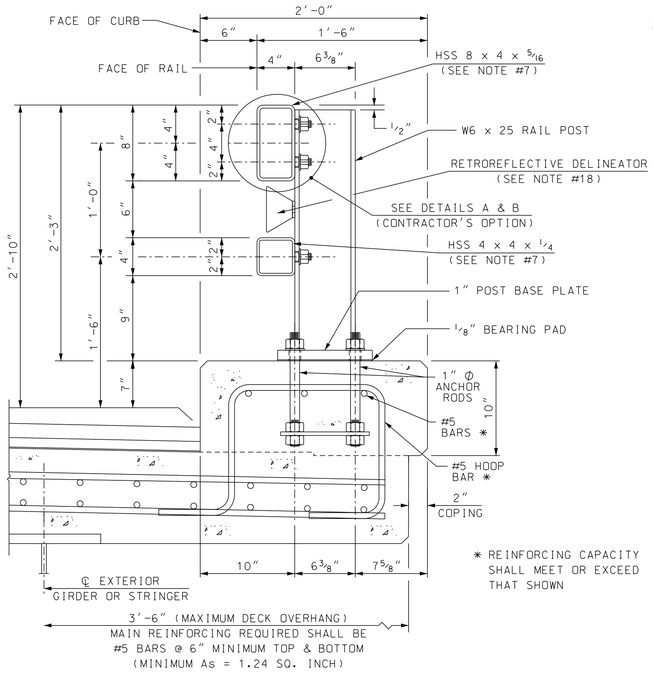

* REINFORCING CAPACITY SHALL MEET OR EXCEED THAT SHOWN

SECTION VIEW

POST ASSEMBLY

SCALE: 1 1/2" = 1'-0"

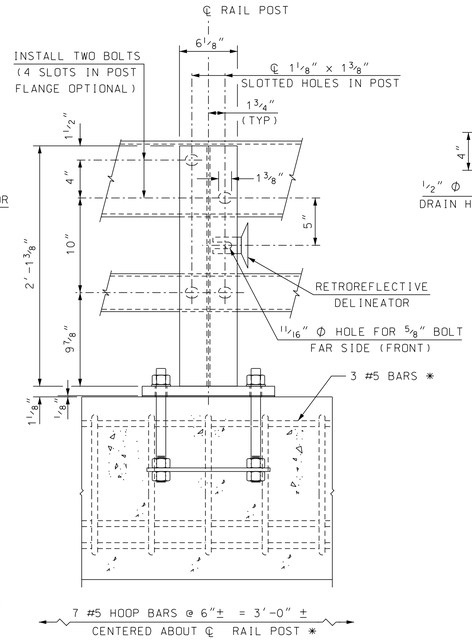

BACK ELEVATION VIEW

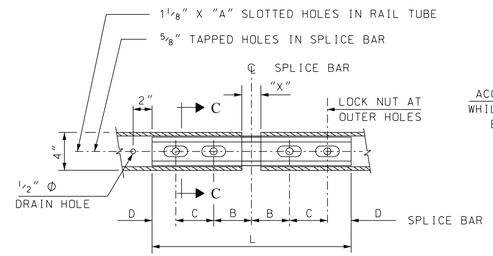

RAIL SPLICE (BOTTOM VIEW)

SCALE: 1 1/2" = 1'-0"

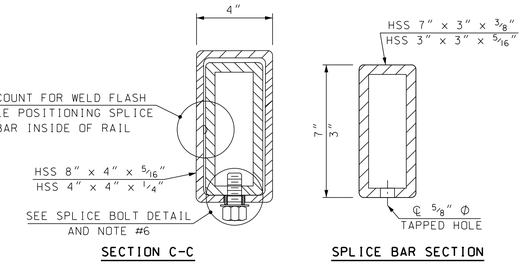

SECTION C-C

SPLICE BAR SECTION

RAIL SPLICE DETAILS

SCALE: 3" = 1'-0"

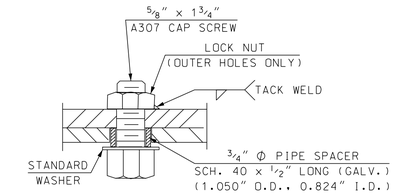

SPLICE BOLT DETAIL

SCALE: 6" = 1'-0"

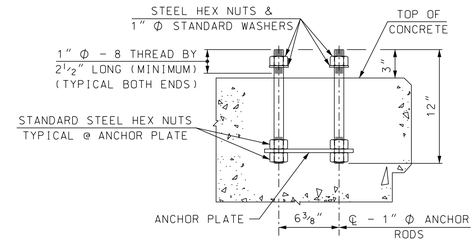

POST ANCHOR ASSEMBLY

SCALE: 1 1/2" = 1'-0"

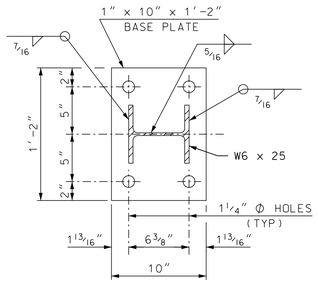

POST BASE PLATE

SCALE: 1 1/2" = 1'-0"

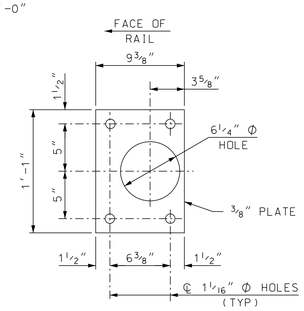

ANCHOR PLATE

SCALE: 1 1/2" = 1'-0"

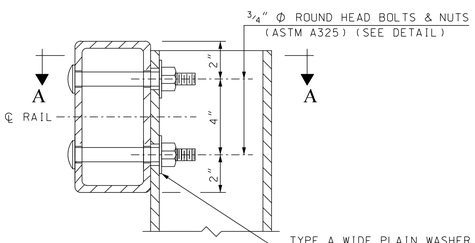

DETAIL A

SCALE: 3" = 1'-0"

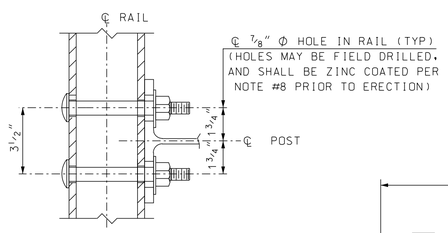

SECTION A-A

SCALE: 3" = 1'-0"

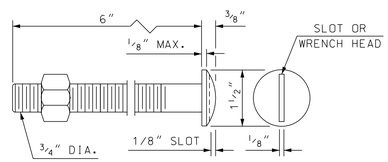

A325 ROUND HEAD BOLT DETAIL

SCALE: 6" = 1'-0"

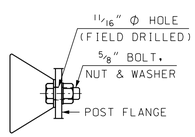

DELINEATOR MOUNTING

NOT TO SCALE

NO MODIFICATIONS PERMITTED TO THIS SHEET, EXCEPT AS NOTED BELOW:

1. POST SPACING @ RAIL ELEVATION
2. ITEM NUMBER AND DESCRIPTION IF SNOW SCREENING AND/OR PROTECTIVE SCREENING WILL BE USED
3. DESIGN OF DECK OVERHANG REINFORCING IS REQUIRED FOR DECK OVERHANG DISTANCE GREATER THAN 3'-6"

RAIL NOTES

(1) ITEM 563.22, BRIDGE RAIL T2, SHALL INCLUDE POSTS, BASE PLATES, ANCHOR PLATES, ANCHOR RODS, PREFORMED PADS, RAIL ASSEMBLY BOLTS, NUTS, WASHERS, STUDS, STRUCTURAL TUBING, SPLICE BARS, PIPE SPACERS, ALL APPURTENANCES, AND GALVANIZING.

(2) BRIDGE RAIL POSTS SHALL BE SET NORMAL (90 DEGREES) TO THE PROFILE GRADE, EXCEPT ON GRADES OVER 5% WHERE POSTS SHALL BE SET VERTICAL.

(3) ENDS OF RAIL TUBE SECTIONS SHALL BE SAWED OR MILLED AND SHALL BE TRUE AND SMOOTH. ALL CUT EDGES OF ALL MATERIAL SHALL BE GROUND SMOOTH.

(4) EACH PIECE OF RAIL TUBING SHALL BE ATTACHED TO A MINIMUM OF THREE (3) POSTS.

(5) BOLT HOLES SHALL BE DRILLED OR PUNCHED. FLAME CUTTING MAY BE USED TO FINISH SLOTTED HOLES IF MECHANICALLY GUIDED.

(6) AT INTERIOR SPLICES, PIPE SPACERS SHALL BE USED ON ONLY ONE SIDE OF THE SPLICE TO ALLOW MOVEMENT ON THAT SIDE. THE TOP AND BOTTOM RAIL SHALL RECEIVE THE SAME TREATMENT. AT END SPLICES PIPE SPACERS SHALL BE USED ON BOTH SIDES OF THE SPLICE TO ALLOW MOVEMENT ON EACH SIDE.

(7) MILL OR SHOP TRANSVERSE WELDS SHALL NOT BE PERMITTED ON ANY RAIL ELEMENT. RAIL ELEMENTS USED ON CURVES SHALL USE 3/8" WALL TUBES AND SHALL BE SHOP FORMED TO THE REQUIRED CURVATURE (SEE SECTION 563.3.2.1).

(8) NO PUNCHING, DRILLING, CUTTING OR WELDING SHALL BE PERMITTED AFTER GALVANIZING, EXCEPT AS ALLOWED IN DETAIL A, AND FOR INSTALLATION OF DELINEATORS. DAMAGED AREAS OF GALVANIZING SHALL BE THOROUGHLY CLEANED, PRETREATED, AND PAINTED WITH TWO COATS OF ORGANIC ZINC-RICH GALVANIZING REPAIR PAINT, HAVING A MINIMUM 92% ZINC BY WEIGHT, TO A THICKNESS EQUAL TO THE ORIGINAL COATING, ACCORDING TO SECTION 550.2.9.1 AND ASTM A780.

(9) NUTS FOR 1" Φ THREADED ANCHOR RODS CONNECTING THE BASE PLATE TO THE CONCRETE SHALL BE TIGHTENED TO A SNUG FIT AND GIVEN AN ADDITIONAL 1/8 TURN.

(10) THREADS FOR ANCHOR RODS MAY BE ROLLED OR CUT. IF CUT THREADS ARE USED, BOLT DIAMETER SHALL NOT BE LESS THAN NOMINAL DIAMETER. IF ROLLED THREADS ARE USED, ROD DIAMETER SHALL NOT BE LESS THAN ROOT DIAMETER OF THREADS.

(11) THIS BRIDGE RAIL SYSTEM WAS SUCCESSFULLY CRASH TESTED FOR AASHTO PL2 IN 1994 BY THE NEW ENGLAND TRANSPORTATION CONSORTIUM AND ACCEPTED AS NCHRP 350 TL-4 PER FHWA LETTER HMHS-B50, MARCH 11, 1999.

MATERIAL NOTES

(12) STRUCTURAL TUBING SHALL CONFORM TO THE REQUIREMENTS OF ASTM A500, GRADE B, STRUCTURAL STEEL TUBING. RAIL TUBING SHALL MEET THE LONGITUDINAL CHARPY V-NOTCH REQUIREMENTS OF 15 FT. LBS. AT 0°F. FOR ASTM A500, GRADE B, THE TEST SAMPLES SHALL BE TAKEN AFTER FORMING THE TUBES. CHARPY V-NOTCH IS NOT REQUIRED FOR SPLICE TUBES.

(13) RAIL POSTS AND BASE PLATES SHALL CONFORM TO THE REQUIREMENTS OF ASTM A572 GR 50, EXCEPT ANCHOR PLATES MAY BE ASTM A36.

(14) DETAIL A BOLTS SHALL BE ASTM A325 OR A449. ALL OTHER BOLTS AND NUTS SHALL CONFORM TO ASTM A307 AND ASTM 563 GRADE A RESPECTIVELY OR BETTER, EXCEPT THAT ASTM A307 NUTS MAY BE USED ON THE BOTTOM OF ANCHOR ASSEMBLY. WASHERS SHALL BE HARDENED STEEL COMMERCIAL TYPE A PLAIN WIDE WASHERS AND SHALL MEET THE DIMENSIONAL REQUIREMENTS OF A.N.S.I. B18.22. ANCHOR RODS SHALL CONFORM TO ASTM A449.

(15) ALL STEEL COMPONENTS (EXCEPT STAINLESS) SHALL BE GALVANIZED AFTER FABRICATION IN COMPLIANCE WITH AASHTO M232 (ASTM A153) AND AASHTO M111 (ASTM A123). THE GALVANIZING KETTLE SHALL HAVE 0.05 TO 0.09 PERCENT NICKEL. GALVANIZED SURFACES SHALL HAVE A UNIFORM APPEARANCE AND GALVANIZED MATERIAL SHALL BE PROPERLY STORED. IF PAINTING IS REQUIRED SEE SPECIAL PROVISIONS FOR 708.

(16) PREFORMED BEARING PADS (1/8" THICK) SHALL CONFORM TO AASHTO M251.

(17) RETROREFLECTIVE DELINEATORS, BOLTS, NUTS, WASHERS AND FIELD DRILLING OF POSTS, INCLUDING GALVANIZING TOUCH-UP, SHALL BE SUBSIDIARY TO ITEM 563.22. SEE STANDARD PLANS FOR ROAD AND BRIDGE CONSTRUCTION (DL-1) FOR ADDITIONAL DETAILS AND SPACING.

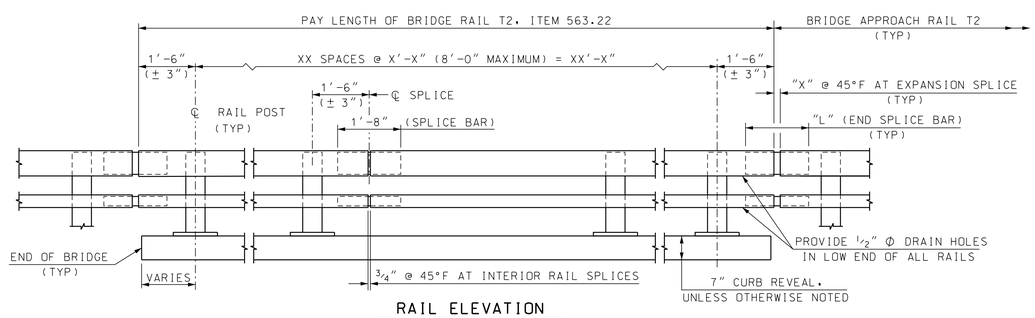

RAIL ELEVATION

SCALE: 1/2" = 1'-0"

SPLICE BAR DIMENSION TABLE							
	T	A	B	C	D	X	L
	INTERIOR	2 1/2"	4"	4"	2"	3/4"	1'-8"
**	≤ 3 1/4"	2 1/2"	4"	4"	2"	2"	1'-8"
**	3 1/4" < T ≤ 5 1/4"	3 1/2"	5"	5"	2 1/2"	3"	2'-1"

T = TOTAL MOVEMENT OF BRIDGE
** = END SPLICE BAR

STATE OF NEW HAMPSHIRE
DEPARTMENT OF TRANSPORTATION * BUREAU OF BRIDGE DESIGN

TOWN | BRIDGE NO. | STATE PROJECT
LOCATION

T2 STEEL BRIDGE RAIL

BRIDGE SHEET OF FILE NUMBER

REVISIONS AFTER PROPOSAL	BY	DATE		BY	DATE
DESIGNED	NETC/JSZ	3/02	CHECKED	NHDOT	
DRAWN	PJP	10/05	CHECKED	JSZ	10/05
QUANTITIES			CHECKED		
ISSUE DATE	11/15/05	FEDERAL PROJECT NO.		SHEET NO.	TOTAL SHEETS
REV. DATE	6/21/19				

SUBDIRECTORY	.DGN LOCATOR	SHEET SCALE
Bridge Railing\Steel Raling	T2_BR-RAIL	AS NOTED