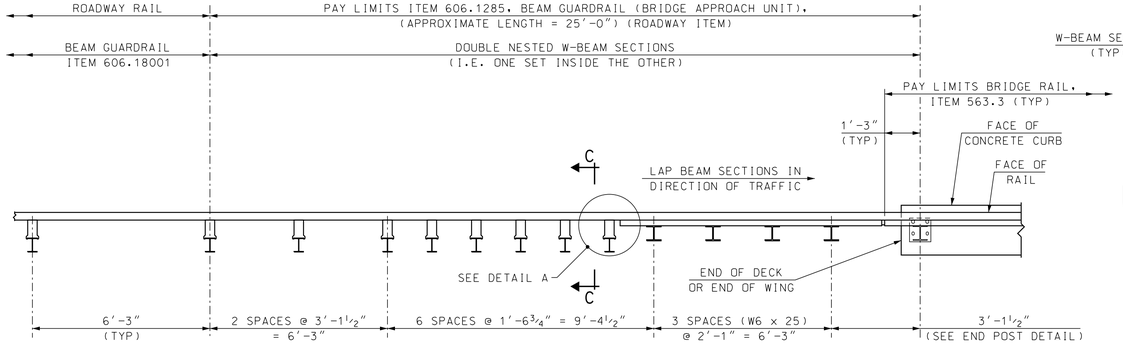

APPROACH RAIL LAYOUT

SCALE: ⅜" = 1'-0"

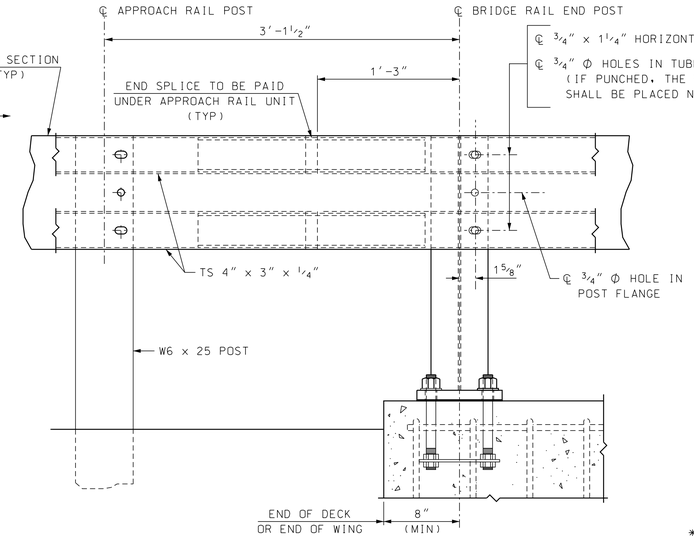

END POST DETAIL

SCALE: 1½" = 1'-0"

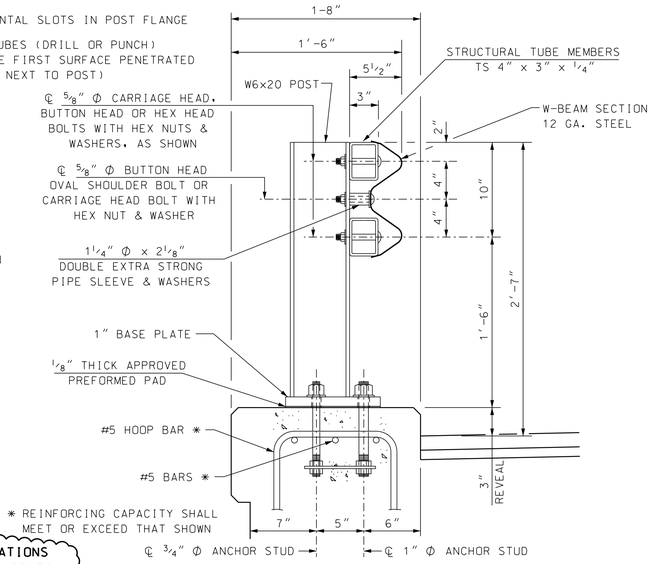

BRIDGE RAIL DETAIL

SCALE: 1½" = 1'-0"

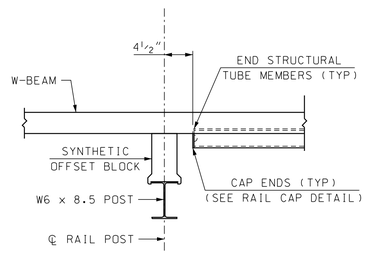

DETAIL A

SCALE: 1" = 1'-0"

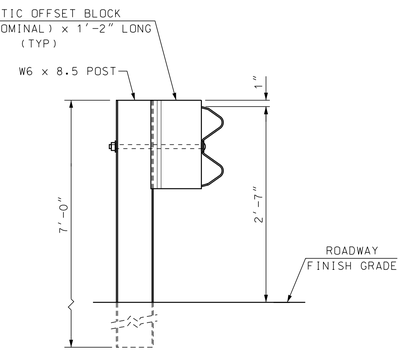

SECTION C-C

SCALE: 1" = 1'-0"

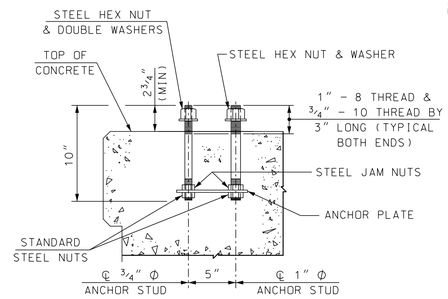

POST ANCHOR ASSEMBLY

SCALE: 1½" = 1'-0"

NO MODIFICATIONS SHOULD BE MADE TO THIS SHEET

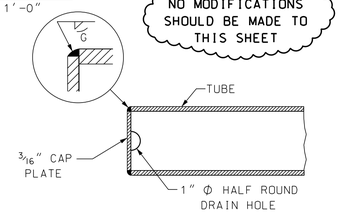

RAIL CAP DETAIL
(BOTTOM VIEW)

SCALE: 3" = 1'-0"

GENERAL NOTES

(1) BRIDGE RAIL T101 SHALL NOT BE USED ON NATIONAL HIGHWAY SYSTEMS.

(2) BRIDGE RAIL T101 WAS SUCCESSFULLY CRASHED TESTED FOR NCHRP 350 (@ HEIGHT OF 2'-3"), TL-3 PER FHWA MAY 30, 1997 MEMORANDUM. USE OF THIS SYSTEM SHALL BE FOR POSTED SPEEDS ≤ 45 mph.

(3) ITEM 563.3, BRIDGE RAIL T101, SHALL INCLUDE POSTS, BASE PLATES, ANCHOR PLATES, ANCHOR STUDS, PREFORMED PADS, RAIL ASSEMBLY BOLTS, NUTS, WASHERS, STRUCTURAL TUBING, SPLICE BARS, PIPE SLEEVES AND W-BEAM SECTIONS.
- ASTM A572 GRADE 50 : POSTS AND BASE PLATES
- ASTM A500 GRADE B : STRUCTURAL TUBING
- ASTM A36 : PIPE SLEEVES, RAIL SPLICE BARS AND ANCHOR PLATES
- ASTM A449 : ANCHOR STUDS WITH STANDARD NUTS AND HARDENED STEEL COMMERCIAL TYPE A PLAIN WIDE WASHERS
- A307 : RAIL BOLTS, NUTS, AND WASHERS
- AASHTO M180 TYPE II : W-BEAM SECTIONS

(4) ALL STEEL COMPONENTS SHALL BE GALVANIZED AFTER FABRICATION IN CONFORMANCE WITH AASHTO M232 (ASTM A153) AND AASHTO M111 (ASTM A123). GALVANIZED SURFACES SHALL HAVE A UNIFORM APPEARANCE AND GALVANIZED MATERIAL SHALL BE PROPERLY STORED.

(5) STRUCTURAL TUBING SHALL BE SUPPLIED AS ONE PIECE FOR BRIDGE RAIL 40 FEET OR LESS IN LENGTH. IN OTHER CASES, TUBING SHALL BE SPLICED WITH A SPLICE BAR (SEE SPLICE BAR DETAILS). NO TRANSVERSE BUTT WELDS ARE PERMITTED ON RAIL TUBING WITHIN A CONTINUOUS LENGTH.

(6) EACH PIECE OF RAIL TUBING SHALL BE ATTACHED TO A MINIMUM OF THREE POSTS.

(7) FOR BRIDGE RAIL POST SPACING, SEE BRIDGE RAIL LAYOUT. THE MAXIMUM BRIDGE RAIL POST SPACING SHALL BE 8'-4". POST SPACING OF 8'-4" OR 6'-3" IS RECOMMENDED WHENEVER POSSIBLE FOR USE WITH 25' SECTIONS OF STANDARD W-BEAM RAIL.

(8) PREFORMED BEARING PADS SHALL CONFORM TO AASHTO M251.

(9) NUTS FOR THREADED ANCHOR STUDS CONNECTING THE BASE PLATE TO THE CONCRETE SHALL BE TIGHTENED TO A SNUG FIT AND GIVEN AN ADDITIONAL ⅛ TURN.

(10) OTHER TYPES OF OFFSET BLOCKS MAY BE SUBSTITUTED FOR THOSE SHOWN. SEE NOTES IN STANDARD PLAN GR-2 (BEAM GUARDRAIL STANDARD SECTION - STEEL POSTS & HARDWARE DETAILS) OF THE HIGHWAY DESIGN STANDARD PLANS FOR ROAD CONSTRUCTION.

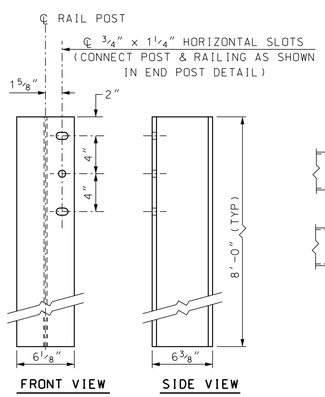

W6 x 25 STEEL POST
(BRIDGE APPROACH RAIL)

SCALE: 1½" = 1'-0"

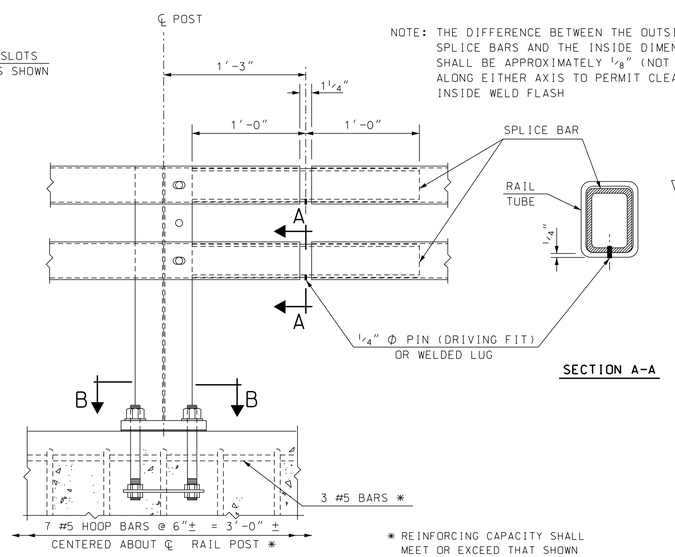

NOTE: THE DIFFERENCE BETWEEN THE OUTSIDE DIMENSIONS OF SPLICE BARS AND THE INSIDE DIMENSIONS OF THE RAIL SHALL BE APPROXIMATELY ⅛" (NOT TO EXCEED 3/16") ALONG EITHER AXIS TO PERMIT CLEARANCE FOR INSIDE WELD FLASH

✱ REINFORCING CAPACITY SHALL MEET OR EXCEED THAT SHOWN

SECTION A-A

TYPICAL SPLICE

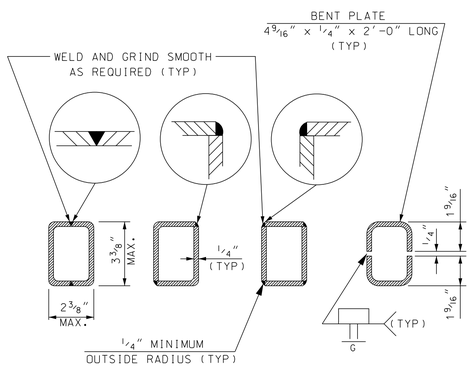

NOTE: OTHER SECTIONS OF EQUAL OR GREATER STRENGTH ARE ACCEPTABLE FOR SPLICE BARS

SPLICE BAR FABRICATION OPTIONS

SPLICE BAR DETAILS

NOT TO SCALE

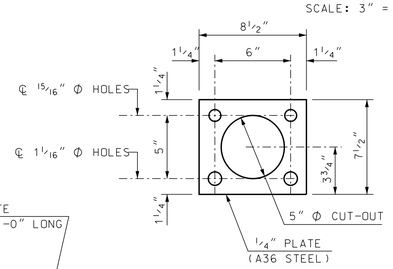

ANCHOR PLATE DETAIL

SCALE: 2" = 1'-0"

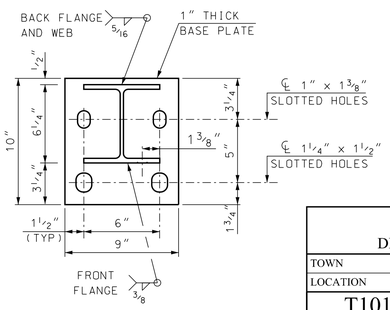

BASE PLATE DETAIL
(SECTION B-B)

SCALE: 2" = 1'-0"

(GALVANIZED - 3" CURB REVEAL)

STATE OF NEW HAMPSHIRE
DEPARTMENT OF TRANSPORTATION * BUREAU OF BRIDGE DESIGN

TOWN | BRIDGE NO. | STATE PROJECT
LOCATION

T101 BRIDGE & APPROACH RAIL (STEEL POSTS)

REVISIONS AFTER PROPOSAL	BY	DATE	BY	DATE
DESIGNED TEXAS/JSZ	3/90	CHECKED NHDOT		
DRAWN PJP	1/10	CHECKED NHDOT	1/10	
QUANTITIES		CHECKED		
ISSUE DATE 1/20/10	FEDERAL PROJECT NO.		SHEET NO.	
REV. DATE 1/6/20				

BRIDGE SHEET OF FILE NUMBER TOTAL SHEETS

SUBDIRECTORY	.DGN LOCATOR	SHEET SCALE
English/T101	T101-3GALV_SP	AS NOTED