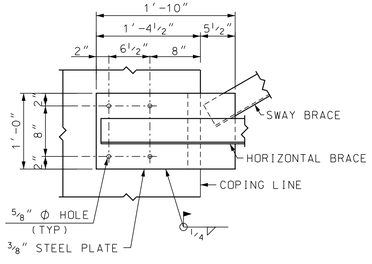

ANCHOR PLATE DETAIL

SCALE: 1" = 1'-0"

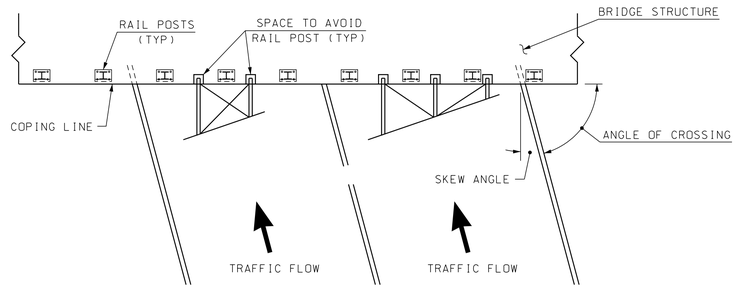

PLAN VIEW

NOT TO SCALE

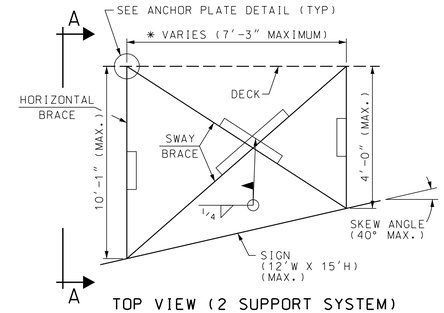

TOP VIEW (2 SUPPORT SYSTEM)

NOT TO SCALE

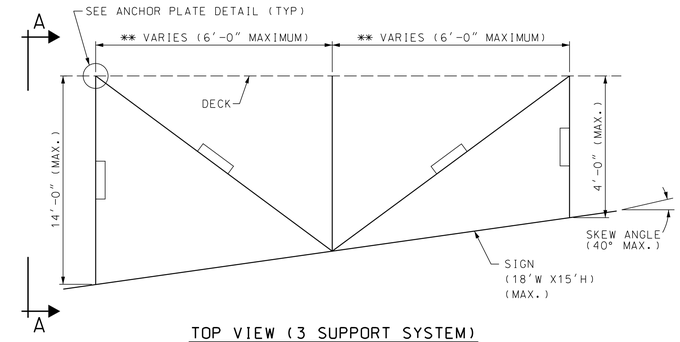

TOP VIEW (3 SUPPORT SYSTEM)

NOT TO SCALE

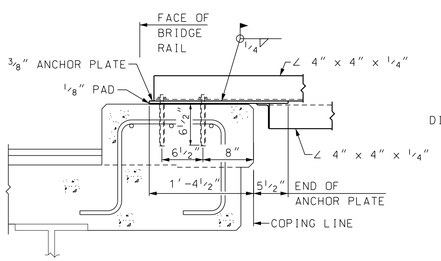

ANCHOR PLATE SECTION

SCALE: 1" = 1'-0"

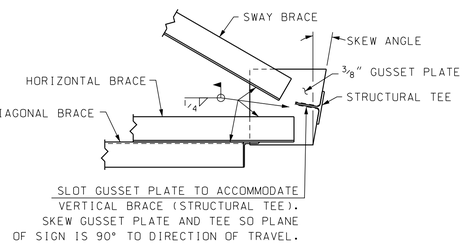

SECTION C-C

SCALE: 1" = 1'-0"

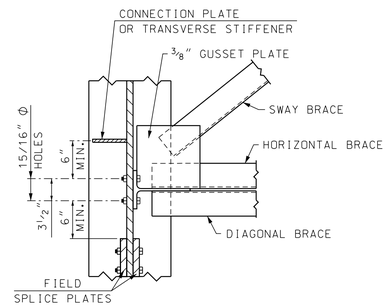

SECTION B-B

GENERAL NOTES

(1) ALL WORK AND MATERIALS ON THIS SHEET SHALL BE PAID UNDER ITEM 615.3000X. EXISTING SIGN SUPPORTS SHALL BE REMOVED AS PART OF ITEM 502.

(2) ALL STRUCTURAL STEEL SHALL BE AASHTO DESIGNATION M223 (ASTM A572) GRADE 50, GALVANIZED.

(3) ALL BOLTS AND RELATED HARDWARE SHALL CONFORM TO THE REQUIREMENTS OF AASHTO M164 (ASTM A325) TYPE 1 (GALV.). ALL BOLTS SHALL BE SLIP CRITICAL (CLASS B). 7/8"Φ HIGH STRENGTH IN 15/16"Φ HOLES.

(4) PREFORMED ELASTOMERIC BEARING PADS (⅛" THICK) SHALL CONFORM TO AASHTO M251.

(5) THE NEW SIGN(S) SHALL BE AS SHOWN ELSEWHERE IN THE PLANS.

(6) FIELD WELDING SHALL BE IN ACCORDANCE WITH NHDOT STANDARD SPECIFICATION SECTION 550.

(7) GALVANIZING SHALL BE IN ACCORDANCE WITH NHDOT STANDARD SPECIFICATION SECTION 550. PRIOR TO FIELD WELDING, GRIND OFF GALVANIZING. REPAIR GALVANIZING WITH APPROVED MATERIALS PER NHDOT STANDARD SPECIFICATION SECTION 550.2.9.1.

DESIGN CRITERIA

(1) SPECIFICATIONS: AASHTO STANDARD SPECIFICATIONS FOR STRUCTURAL SUPPORTS FOR HIGHWAY SIGNS, LUMINAIRES, AND TRAFFIC SIGNALS, 6TH ED. 2013 AS AMENDED
NHDOT 2010 STANDARD SPECIFICATIONS AS AMENDED.

(2) DESIGN LOADING: WIND PRESSURE = 44 PSF
WIND SPEED = 100 MPH
SIGN WEIGHT = 5 PSF (INCLUDES WT4X9)
STEEL YIELD STRENGTH (Fy) = 50 KSI

(3) DESIGN DIMENSIONS: MAXIMUM DIMENSIONS AND SKEWS AS SHOWN ON PLAN.

SUPPORT SYSTEM NOTES

* (1) DISTANCE BETWEEN HORIZONTAL MEMBERS SHALL BE 60% OF SIGN WIDTH ON CENTER FOR SIGNS WITH WIDTHS ≤ 12'-0" (TWO SUPPORT SYSTEM).

** (2) DISTANCE BETWEEN HORIZONTAL MEMBERS SHALL BE ONE-THIRD OF SIGN WIDTH ON CENTER FOR SIGN WIDTHS 12'-0" TO 18'-0" (THREE SUPPORT SYSTEM).

(3) THE SIGN SUPPORT MEMBERS HAVE BEEN SIZED USING THE DESIGN CRITERIA NOTED ON THIS PLAN.

(4) DIAGONAL SWAY BRACE MEMBERS SHALL BE ∠ 4" x 4" x ¼" (TWO MEMBERS ON TOP AND TWO MEMBERS ON BOTTOM).

(5) THE CONTRACTOR SHALL DETERMINE THE LENGTHS OF THE MEMBERS TO PROVIDE BRIDGE CLEARANCE AND TO ACCOMMODATE SKEW ANGLE.

(6) THE FACE OF ALL STRUCTURAL TEES SHALL LIE IN THE SAME PLANE.

(7) THE SUPPORT MEMBERS SHALL BE DETAILED TO PROVIDE A LEVEL SIGN POSITION, REGARDLESS OF THE GRADE OF THE BRIDGE STRUCTURE. THE DETAILING OF THE SUPPORT MEMBERS SHALL PROVIDE ADEQUATE SPACE FOR PAINTING (IF REQUIRED) AND INSPECTION OF THE BEAMS.

(8) THE CONTRACTOR SHALL TAKE ALL MEASUREMENTS NECESSARY TO ENSURE THE PROPER ATTACHMENT AND MIN. CLEAR DISTANCES OF THE PROPOSED SIGN TO THE BRIDGE STRUCTURE.

(9) NO PART OF THE SIGN STRUCTURE SHALL PROJECT BELOW THE BOTTOM FLANGE OF THE BRIDGE GIRDER OR REDUCE THE STRUCTURE'S VERTICAL CLEARANCE.

(10) THE LOCATION OF THE PROPOSED SIGN ON THE BRIDGE STRUCTURE SHALL BE CENTERED WITHIN THE TRAVEL LANES, SUBJECT TO THE APPROVAL OF THE ENGINEER.

(11) THE CONTRACTOR SHALL SUBMIT SHOP DRAWINGS OF THE SIGN SUPPORT TO THE BUREAU OF BRIDGE DESIGN FOR APPROVAL.

ANCHOR PLATE NOTES

(1) ½" Φ HIGH STRENGTH GALVANIZED ANCHOR BOLTS 8" LONG (1½" ABOVE TOP OF CONCRETE) WITH STANDARD GALVANIZED NUT AND WASHER IN DRILLED HOLE. THE HOLE SHALL BE FILLED WITH HIGH STRENGTH NON-SHRINK GROUT AFTER THE ANCHOR BOLT IS INSTALLED (TYPICAL). THE ANCHOR BOLTS SHALL CONFORM TO THE REQUIREMENTS OF ASTM A449.

(2) FOR A C.I.P CONCRETE COPING, THE ½" Φ HIGH STRENGTH GALVANIZED BOLTS SHALL BE SET IN PLACE BEFORE PLACEMENT OF CONCRETE.

NO MODIFICATIONS SHALL BE MADE TO THIS SHEET EXCEPT THE CONCRETE GIRDER ATTACHMENT DETAIL.

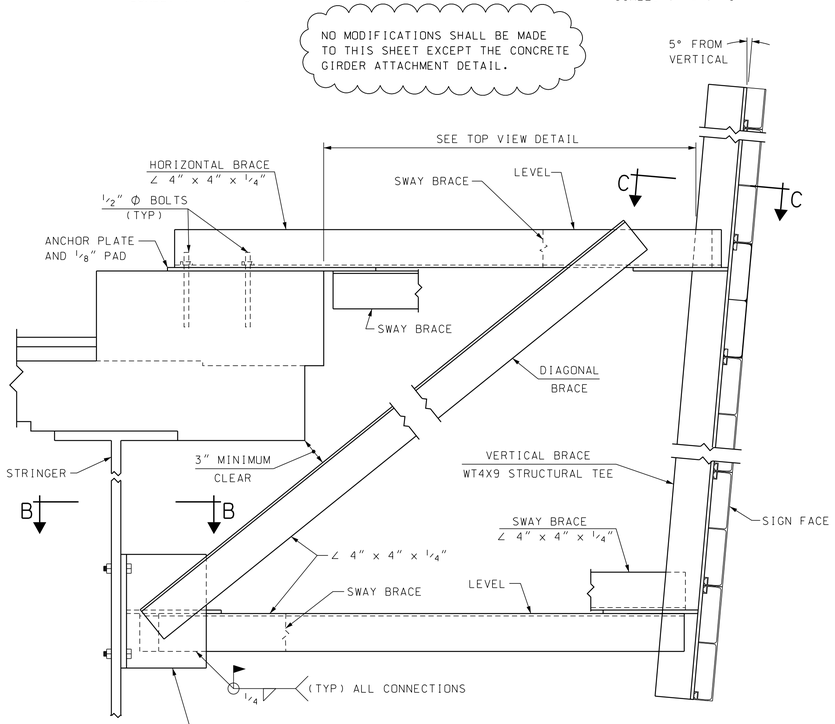

VIEW A-A

NOT TO SCALE

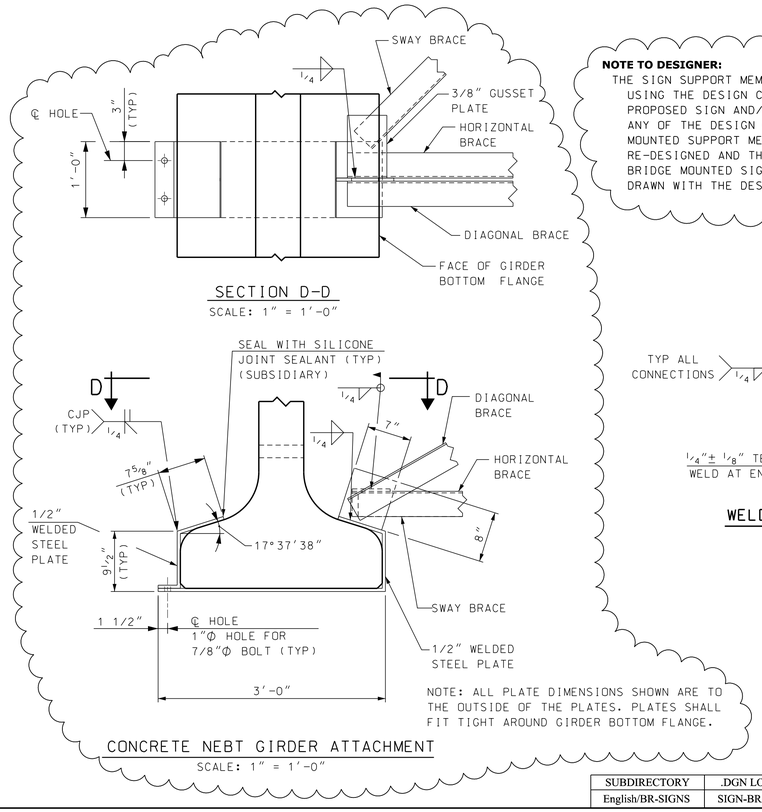

CONCRETE NEBT GIRDER ATTACHMENT

SCALE: 1" = 1'-0"

NOTE TO DESIGNER:
THE SIGN SUPPORT MEMBERS HAVE BEEN SIZED USING THE DESIGN CRITERIA NOTED. IF THE PROPOSED SIGN AND/OR SIGN SUPPORT EXCEEDS ANY OF THE DESIGN CRITIERIA, THE BRIDGE MOUNTED SUPPORT MEMBERS AND ANCHORS SHALL BE RE-DESIGNED AND THE GIRDER ANALYZIED. A NEW BRIDGE MOUNTED SIGN SUPPORT SHEET SHALL BE DRAWN WITH THE DESIGNER NOTED IN THE TITLE BOX.

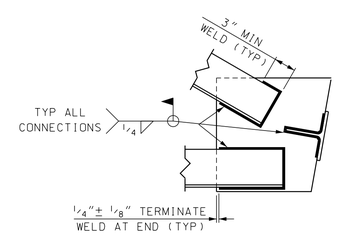

WELD TERMINATION DETAIL

SCALE: 1½" = 1'-0"

SUBDIRECTORY	.DGN LOCATOR	SHEET SCALE
English/BR-SIGNS	SIGN-BRACKETS	AS NOTED

STATE OF NEW HAMPSHIRE
DEPARTMENT OF TRANSPORTATION * BUREAU OF BRIDGE DESIGN

TOWN | BRIDGE NO. | STATE PROJECT
LOCATION

BRIDGE-MOUNTED SIGN SUPPORTS

BRIDGE SHEET OF FILE NUMBER

REVISIONS AFTER PROPOSAL		BY	DATE		BY	DATE
	DESIGNED	NHDOT		CHECKED		
	DRAWN	PJP	12/06	CHECKED	ABH	3/14
	QUANTITIES			CHECKED		
	ISSUE DATE	1/90	FEDERAL PROJECT NO.		SHEET NO.	TOTAL SHEETS
	REV. DATE	11/2015				