NHDOT / ACEC-NH Bridge Subcommittee Meeting Minutes

June 8, 2018

Invitees: (Check Mark Denotes Attendance)	
✓ Bob Landry, NHDOT	✓ Tom Kendrick, MJ (Co-Chair)
✓ Angela Hubbard, NHDOT (Co-Chair)	Bob Durfee, D&K
✓ Joe Adams, NHDOT	✓ Steve Hodgdon, HTA
✓ John Poisson, NHDOT	✓ John Watters, GPI
✓ David Scott, NHDOT	Adam Stockin, WSP
✓ Tony Weatherbee, NHDOT	✓ Tom Levins, GM2 (note taker)

Location: NHDOT – Large Highway Design Conference Room Time: 10:00 AM – 11:30 AM

Notes By**:** T. Levins

Action Items: In red text

Second Quarter Meeting 2018 (4th meeting of this subcommittee)

Introductory Remarks

- Nothing to mention at this time

Department updates and staff changes (promotions, new-hires, retirements, etc.)

- Ron Kleiner has filled the CE5 Bridge position in Planning and Community Assistance.
- Steve Johnson is the new Administrator of Bridge Maintenance after Doug Gosling retired.
- Mark Richardson is working part time in Bridge Design Bureau aiding with document work.
- Bridge Design Bureau has hired new interns to help with bridge maintenance and preservation data updates.
- A CE4 position in the Bridge Design Bureau has been externally posted.

Summary of In-House Design Section staff meetings

- March: Selection of Ten Year Plan projects; Bridge Ranking process now posted.

- April: AASHTO Meetings Agenda reviewed. Committee on Bridges & Structures (COBS) Agenda items revised. NHDOT has no issues with Agenda items; TRB Webinar on steel fracture critical members. Might be backing off on arm's length reach for inspection. FHWA is on board and monitoring; Discussion on upside down steel tub girders (folded plate girders). NHDOT interested in trial project. John Watters will look into MassDOT demonstration project in Uxbridge, MA. Subsequent to this meeting, John Watters and Tom Kendrick forwarded additional information regarding the subject.

NHDOT Bridge Design Manual Status

- Final efforts are being completed on Chapter 7. Still working on Rehabilitation section. Entire Chapter 7 will be sent out next month for review, which will complete the chapter.
- Hydraulics Section Revisions currently being made. 2-D hydraulics utilized on US 2 bridge in Lancaster. Property owner had video of recent storm. Lidar and bathometrics or sonar used for surface modeling information.

NHDOT Information for Consultants

- Bridge Design Memorandum 2018-03, Temporary Barrier for Bridge Projects was sent out to Consultants and is on-line.
    - Texas Restrained Barrier (X-Bolt) has 3 plan sheets and Braced Barrier has 2 plan sheets. All sheets need to be included in the contract plans.
    - Place temporary barrier sheets after Lighting (if applicable) else after Bridge Approach rail, before Reinforcing Schedules. See Chapter 11.4, Sequence of Drawings for order of bridge plans.
    - There are limitations for curvature for each temp. barrier. Designer needs to confirm the barrier will work with the project. If a temp. barrier doesn't work, then a special provision needs to be written noting what barrier to use.
    - Don't draw the tube behind the barrier. Show just a F-shape barrier and label with the item number.
    - Both have been MASH crash tested
- A new steel portable barrier called BarrierGuard 800 is also available on the market. Lighter weight and narrower.
- New documents on the Bridge Design Website:
    - NHDOT Bridge Program Rehabilitation and Replacement List Ranking Process
    - NHDOT Bridge Program State Red List Ranking Process

- More documents to come.

- Bridge Manual, Chapter 2, Hydraulics Section:
  - Thank you for all the feedback regarding how to determine freeboard.
  - Changes to the methods of doing Hydraulics (different levels) and how to measure freeboard will soon be posted on-line for Chapter 2.

- Deck Reinforcing (Different bar types being used; Hoop bar in curbs):
  - Salem-Manchester project 14633D, bridge Rte 102 over I-93 in Londonderry had a TyBot robot to install the rebar ties. The machine could only use epoxy coated ties. The deck called for stainless steel bars with stainless steel ties and plastic chairs. The Contractor was given the ok to use epoxy ties. The Contractor ran out of plastic chairs and requested to use epoxy because of the lead time to order plastic ones. He was told to order plastic chairs. Angie has done a lot of research on stainless steel and there is no reaction with using other metals with stainless steel. She found that stainless can be used with black bars or anything else without concern. The issue comes down to if paying for stainless so there is no concern for corroding steel, then once you allow other types of steel with the deck, you have lowered the life of the deck. It was felt that if allowed epoxy chairs that would be a lot of "black" steel in the deck that would decrease its life, not because of concern with reacting to stainless steel.
  - We need to match what was crash tested for the bridge railing in all our projects. The hoop bars shall be dimensioned so the legs tie to the bottom transverse bar and an extra longitudinal bar shall be called out to tie at the corner of the front hoop leg. The deck details will show this.
  - The details will also show a double hook reinforcing bar for the bottom mat with precast panels. For short overhangs (< 2.5') the detail shows a bent hook bar. Decks without precast panels do not require a hook bar as long as the minimum deck steel (#5 at 6") is provided per the crash test of the railing.
  - Steve Hodgdon suggested instead of a bent hook bar to use a straight hook bar tied to the top mat and a u-shape bar on the bottom.
  - *Subsequent to the meeting, NHDOT Bridge Design Bureau discussed the precast panel overhang detail that shows a bent hook bar. It was decided to keep the bent hook bar as shown since it is tied to the hoop bar leg (bottom and top) and will help in pull-out during a crash load on the railing. This bent*

bar is only needed for overhangs< 2.5' otherwise a double hook bar can be used on the bottom and the hoop bar leg tied to it.

- NETC Research Program fully funded for *Development of MASH Computer Simulated Steel Bridge Rail and Transition Details*. (ME, VT, NH):
    - Maine is the lead. Technical advisors from ME, VT, and NH. First step is to hire company to look at all the rail sections and decide what sections to use for a computer simulation, including approach railing. A 3-bar with curb and 4-bar with sidewalk including approach rail will be tested for TL-4. The project is 12 months long.

- Anchor Rods:
    - If calling out an anchor rod, make sure the size of the bolt and thread length are a common in-stock item. Soundwall plans showing anchors for a bridge curb are calling out an anchor that is not in stock. NHDOT will be noting this on the sample plan on-line.

- AASHTO Modulus of Elasticity Equation:
    - The modulus of elasticity equation was changed in AASHTO to encompass compressive strengths up to 15 ksi and unit weights between 0.09 and 0.155 kcf. Our decks are 4 ksi, 0.145 kcf.
    - NHDOT ran some designs using n=7 vs n=8. The value is used for checking cracking in deck design and there is no major difference. NHDOT ran Merlin-Dash for a compact and non-compact composite girder. For a non-compact girder, 160 ft. long 65.75-in. deep simple span, the max. difference was in the total positive stress of the beam, 0.50 ksi greater stress for n=8. The compact girder is a W36x182, 52 ft. long. See enclosures.
    - Unless a designer designs right up to the maximum capacity, which they shouldn't, there should be no issue if a designer uses the new equation (n=7) and the checker uses the old equation (n=8). Therefore, it will not be noted in the Bridge Manual what equation a designer should use. According to AASHTO the designer can use either.

- Prestressed Beam End Treatments:
    - The PCI manual section 3.2.5.5 Durability-Related Treatments, states "a final surface treatment be applied to precast concrete bridge members as added assurance of long-term durability. The most common treatment employed is the application of a penetrating sealer, such as silane or siloxane coating."

Sections 3.2.5.1 through 3.2.5.1.5 talk about treating the strands, not the concrete.

- The NHDOT Spec 528.3.16.4 states: "Finish of Strands. At the ends of simple span members and the free ends of members made continuous, all strands shall be recessed. Each recess shall be 1.5" square and ¾" deep. Projected strands shall be burned out unless specified otherwise on the plans and the recess cleaned prior to patching with an approved material. The entire end cross-section shall then be coated with an approved bitumastic material."
- The Contractors would use A-H Coal Tar Epoxy 210 or Bitumastic 300-M Coal Tar. Coal tar is now banned by the Bureau of Environment and is no longer on the QPL. What product do other NE states use for sealing the concrete at the ends of the prestressed beams if they are not enclosed in concrete?
- Florida DOT uses a high-performance sealant to coat the end of beam. Cost included in the beam item. Gray in color. Steve H. will try and locate the spec. *Subsequent to the meeting, Steve H. provided a copy of the spec that was used in Bath, Maine.*

I-293 (Brown Ave. & Frontage Rd) Bridge Reinforcing Follow-up:

- Two twin barrel bridges were built with different reinforcing. 1st barrel: I-293 EB/WB over Frontage Road. WB advertised for stainless steel clad but galvanized reinforcement was constructed. WB is a bare deck. EB was constructed with epoxy coated reinforcing and has membrane and pavement. 2nd barrel: I-293 EB/WB over Brown Ave. WB was constructed with stainless steel reinforcement and bare deck. EB was constructed with epoxy coated reinforcing and membrane and pavement.
- All bridges were constructed in 2004. It's been 14 years. All the decks have a 8 (very good) rating except WB over Frontage Rd (galvanized reinf.) is rated 7 (good). The pictures from 2017 inspection show the grooved bare deck has worn off at the wheel lines. Otherwise, only minor cracks are noted.
- There was some brief discussion regarding asset management of bare deck bridges
- It was noted that polymer modified concrete overlays seem to perform well to extend the life of worn bare decks and they have performed better than latex modified concrete overlays.

Sleeper Slab Details Follow-up:

- Most states use an asphaltic plug joint. Some states use compression and strip seals.

- Since NHDOT is limiting the use of asphaltic plug and closed cell expansion joints, we will be using more compression/strip seals at the sleeper slab. These expansion joints seem over designed for a sleeper slab. Speak with the Design Chief for determination on what type of joint to use.

Review of Accelerated Bridge Construction (ABC) training and data collection efforts

- East Kingston – closing June 14, 2018.
- Self-performance for PBUs and some substructure units will lower cost. Doesn't need to be PCI Certified, so Contractor can cast units in his yard or on-site. NHDOT would like all ABC projects to allow self-performance. Need to change the specs and make provisions for inspection of casting units.
- Maine DOT is using "Fast Conventional" construction with incentive/disincentive clause. Cast-in-place concrete with accelerated schedules.

Discuss potential technical and business-related topics

- Continue moving forward with ABC discussion
- Preservation – next 4 years a lot of the work being put out by NHDOT
- Corrosion resistant steel (use stainless on some projects)
- Move forward with UHPC

Bridge Bureau workload and anticipated consultant support needs

- Healthy program funding; advancing of projects is required.
- Manchester-Hooksett 41475 project to Consultant Selection soon
- 4 or 5 D-B projects coming forward:
    - Nashua/Merrimack/Bedford
    - Bow-Concord
    - Manchester Exit 6 & 7
    - Londonderry – I-93 Exit 4A (approved by Front Office, approx. $70M)
- Previously mentioned - more preservation projects to come to consultants; need to be on-shelf a year early.

Potential NHDOT and Consultant bridge training opportunities

- A request was made for GRFP design training; design guide specs are not easily followed. No ASTM spec for manufacturers to follow.

Next Meeting - Friday September 14, 2018

Attachments:

- Agenda – June 8, 2018
- E-mail from Tom Kendrick regarding folded plate girders
- AASHTO Agenda Items e-mail
- NHDOT deck details and modulus of elasticity information

I have attempted to summarize discussions held during this meeting as accurately as possible. If there are any items discussed herein that are misrepresented in any way, please contact me by June 27th. In the absence of any corrections or clarifications, it will be understood that these minutes accurately summarize the discussions at the meeting.

Respectfully Submitted,

Tom Levins

NHDOT / ACEC-NH Bridge Subcommittee
MEETING AGENDA
June 8, 2018

Location:
NHDOT- Large Highway Design Conference Room

Time:
10:00 AM to 11:30 AM

Purpose of Meeting:
Second Quarter Meeting 2018

Invitees:

- ☐ Bob Landry, NHDOT
- ☐ Angela Hubbard, NHDOT (Co-Chair)
- ☐ Joe Adams, NHDOT
- ☐ John Poisson, NHDOT
- ☐ David Scott, NHDOT
- ☐ Tony Weatherbee, NHDOT
- ☐ Tom Kendrick, MJ (Co-Chair)
- ☐ Bob Durfee, D&K
- ☐ Steve Hodgdon, HTA
- ☐ John Watters, GPI
- ☐ Adam Stockin, WSP/PB
- ☐ Tom Levins, GM2 (Note Taker)

AGENDA ITEMS:

1. Introductory remarks
2. Department staff changes (promotions, new-hires, retirements, etc.)
3. Summary of In-House Design Section staff meetings
4. NHDOT Bridge Design Manual update
5. NHDOT Information for Consultants
    - Bridge Design Memorandum 2018-03, Temporary Barrier for Bridge Projects was sent out to Consultants and is on-line.
    - New documents on the Bridge Design Website
        - NHDOT Bridge Program Rehabilitation and Replacement List Ranking Process
        - NHDOT Bridge Program State Red List Ranking Process
    - Bridge Manual, Chapter 2, Hydraulics Section
    - Deck Reinforcing (Different bar types being used; Hoop bar in curbs)
    - NETC Research Program fully funded for *Development of MASH Computer Simulated Steel Bridge Rail and Transition Details*. (ME, VT, NH)
    - AASHTO Modulus of Elasticity Equation
    - Prestressed Beam End Treatments
6. I-293 (Brown Ave. & Frontage Road) Bridge Reinforcing Follow-up
7. Sleeper Slab Details Follow-up
8. Accelerated Bridge Construction (ABC) - Recent Trends
9. Discuss potential technical and business-related topics
10. Bridge Bureau workload and anticipated consultant support needs
11. Potential NHDOT and Consultant bridge training opportunities

12. Subcommittee membership rotation

Tom Kendrick, Bob Durfee, Bob Landry, Angela Hubbard	Sept. 2017 to Sept. 2019
Steve Hodgdon, John Watters, Joe Adams, John Poisson	Sept. 2017 to Sept. 2020
Adam Stockin, Tom Levins, David Scott, Tony Weatherbee	Sept. 2017 to Sept. 2021

13. Upcoming meetings are scheduled for the following dates, all occurring on Friday from 10:00 to 11:30 AM:
    - September 14, 2018
    - December 14, 2018
    - March 8, 2019
    - June 1, 2019

Tom Levins

From: Tom T. Kendrick <tkendrick@mjinc.com>
Sent: Friday, June 15, 2018 10:24 AM
To: Scott, David; Landry, Robert; Adams, Joseph; 'Robert Durfee'; 'Adam Stockin (Adam.Stockin@wsp.com)'; Tom Levins; 'John Watters (jwatters@gpinet.com)'; Hubbard, Angela; Poisson, John; Weatherbee, Anthony; 'Hodgdon, Steven M.'
Subject: MassDOT Folded Plate Girder Project - Uxbridge, MA

To NHDOT/ACEC-NH Bridge Subcommittee Members:

The folded plate girder system was mentioned at our meeting last week, including the MassDOT demonstration project in Uxbridge, MA.

The Uxbridge project was discussed during a UTC-FIU webinar in January 2016 and a PDF version of that presentation can be found here:

https://abc-utc.fiu.edu/wp-content/uploads/sites/52/2016/01/January-webinar-presentation-1.pdf

I spoke with Tom Donald of MassDOT earlier this week and he offered the following additional information:

- The system is currently limited to approximately 50-ft span lengths due to the length of generally available press brakes within steel fabrication shops.
- The system is proprietary so it would need a Public Interest Finding (PIF) or other special process to use federal funding.
- They encountered some problems with the welded shear studs, and the solution was to replace some of them with bolted stud connectors.
- They continue to look for opportunities to use the system, but there is often strong competition from other systems in the under-50-ft span length.

My own observation of the system is that it does appear to be an economical solution for a site with a preference for steel beams. Based on the information from the UTC-FIU presentation it appears these unit were shipped to the site for a total fabricated and delivered cost of approximately $118 per square foot of deck area. This cost is lower than what we are seeing for comparable decked steel Prefabricated Bridge Units (PBU's), but higher than comparable NEXT-D beams on a square foot of deck area basis.

Regards,

Tom

Tom Kendrick, P.E.
Market Sector Leader – Transportation
McFarland Johnson
Mobile: (207) 402-0831
tkendrick@mjinc.com

Tom Levins

From: Scott, David <David.Scott@dot.nh.gov>
Sent: Friday, June 08, 2018 1:38 PM
To: Landry, Robert; 'Tom T. Kendrick'; Adams, Joseph; Robert Durfee; Adam Stockin (Adam.Stockin@wsp.com); Tom Levins; John Watters (jwatters@gpinet.com); Hubbard, Angela; Poisson, John; Weatherbee, Anthony; Hodgdon, Steven M.
Subject: RE: NHDOT-ACEC Bridge Subcommittee - June 8, 2018 Meeting

Hi ACEC Bridge Subcommittee,

The **DRAFT** AASHTO Agenda Items are now on the NHDOT FTP site.
T-15's items are what should be on the ballot assuming they make it out of the Technical Committee.
All other AIs could have been edited. (Once NH made our comments, I didn't go back to update.)

Also, while T-14's AIs are in the correct subdirectory, they are also incorrectly in the T-13 directory. (I think file permissions aren't allowing me to delete what I uploaded.)

I hope this helps.

David

From: Landry, Robert
Sent: Friday, June 08, 2018 11:56 AM
To: 'Tom T. Kendrick'; Adams, Joseph; Scott, David; Robert Durfee; Adam Stockin (Adam.Stockin@wsp.com); Tom Levins; John Watters (jwatters@gpinet.com); Hubbard, Angela; Poisson, John; Weatherbee, Anthony; Hodgdon, Steven M.
Subject: RE: NHDOT-ACEC Bridge Subcommittee - June 8, 2018 Meeting

Name on bent plate c shape girder is Matthew Macey with CDR Maguire
Matt.Macey@cdrmaguire.com

Attached is the T-10 book

Have a great weekend and thank you

Robert Landry
NHDOT Bridge Design, Administrator
Robert.Landry@dot.nh.gov
603.271.3921
"It isn't our position, but our disposition, that makes us happy."

From: Tom T. Kendrick [mailto:tkendrick@mjinc.com]
Sent: Monday, June 04, 2018 10:22 AM
To: Adams, Joseph; Landry, Robert; Scott, David; Robert Durfee; Adam Stockin (Adam.Stockin@wsp.com); Tom Levins; John Watters (jwatters@gpinet.com); Hubbard, Angela; Poisson, John; Weatherbee, Anthony; Hodgdon, Steven M.
Subject: NHDOT-ACEC Bridge Subcommittee - June 8, 2018 Meeting

Hello,

The agenda for Friday's meeting is attached for your use. Regarding Agenda Item #8, please come to the meeting prepared to have a brief discussion on any recent trends or new developments related to Accelerated Bridge Construction. This could be something you have first-hand knowledge of from a recent project, or even something you have heard or read about that has been tried elsewhere.

Have a great week, and I look forward to seeing you on Friday!

Best Regards,

Tom

Tom Kendrick, P.E.
Market Sector Leader – Transportation
McFarland Johnson
Mobile: (207) 402-0831
tkendrick@mjinc.com

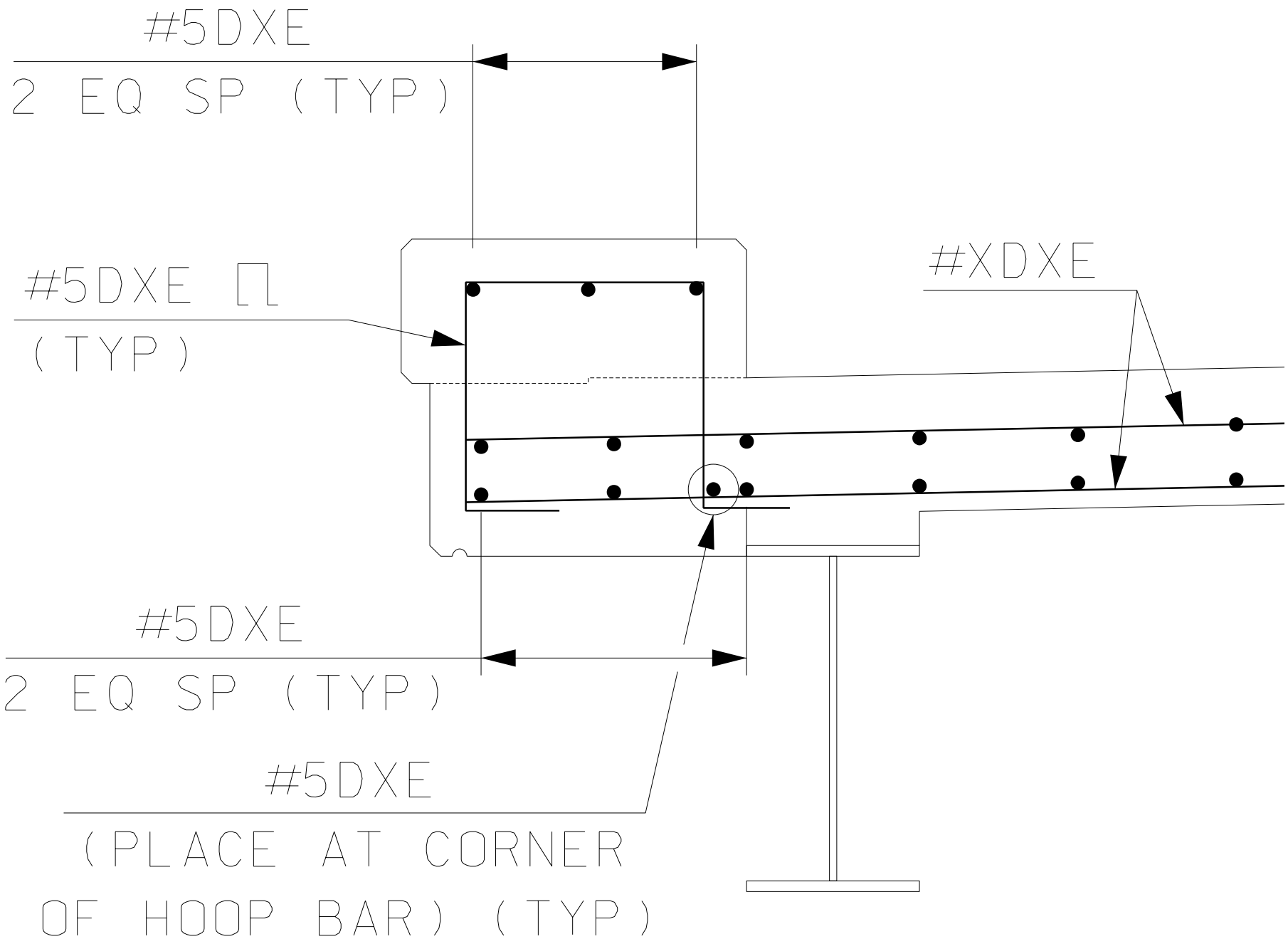
#5DXE
2 EQ SP (TYP)
#5DXE ⊓
(TYP)
#XDXE
#5DXE
2 EQ SP (TYP)
#5DXE
(PLACE AT CORNER
OF HOOP BAR) (TYP)

NEW HAMPSHIRE DEPARTMENT OF TRANSPORTATION

BUREAU OF BRIDGE DESIGN

DESCRIPTION: CONCRETE DECK DETAILS - DECK OVERHANG DETAIL (PRECAST DECK PANEL)

DATE REVISED: x/x/201x

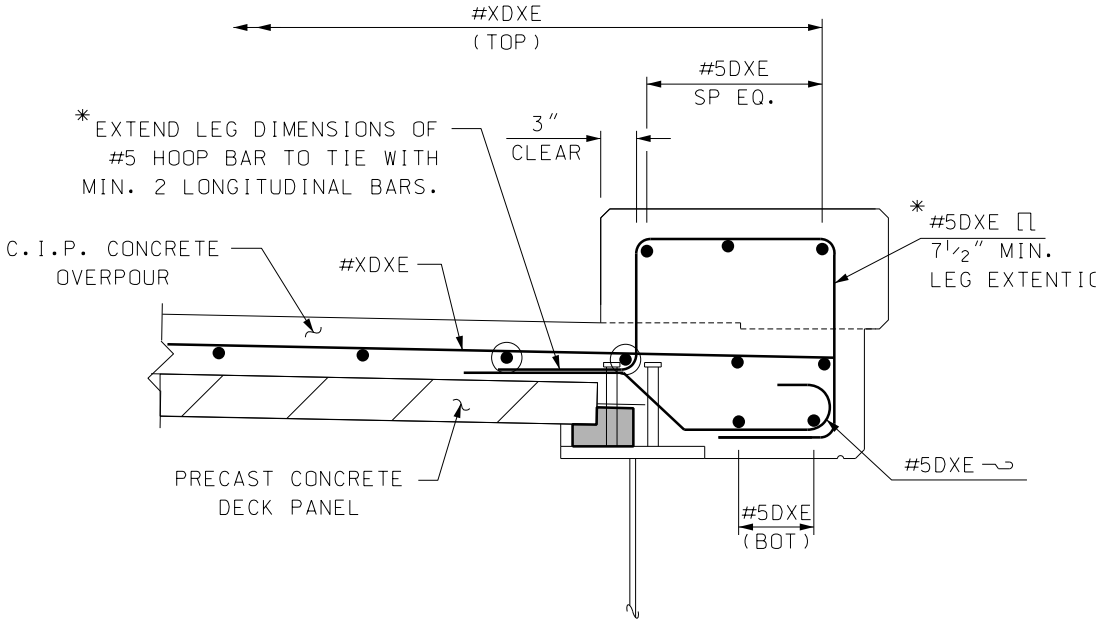

*DETAIL SHOWN FOR DECK OVERHANG LESS THAN 2'-6". CURB HOOP BAR SHALL BE TIED TO THE BOTTOM LONGITUDINAL DECK BARS WHEN POSSIBLE.

DECK OVERHANG DETAIL (PRECAST DECK PANEL)

MODIFY TO FIT PROJECT

DRAFT

DATE: 6-12-18

NEW HAMPSHIRE DEPARTMENT OF TRANSPORTATION

BUREAU OF BRIDGE DESIGN

DESCRIPTION: CONCRETE DECK DETAILS - DECK OVERHANG DETAIL (PRECAST DECK PANEL)

DATE REVISED: x/x/201x

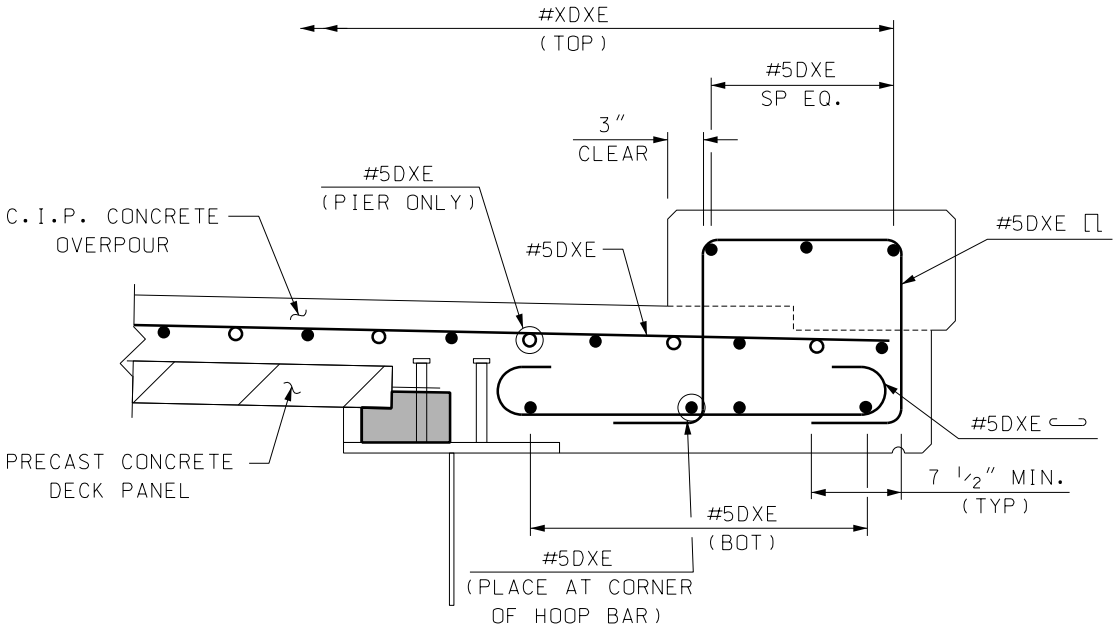

DECK OVERHANG DETAIL
(PRECAST DECK PANEL)

MODIFY TO FIT PROJECT

DRAFT
DATE: 6-12-18

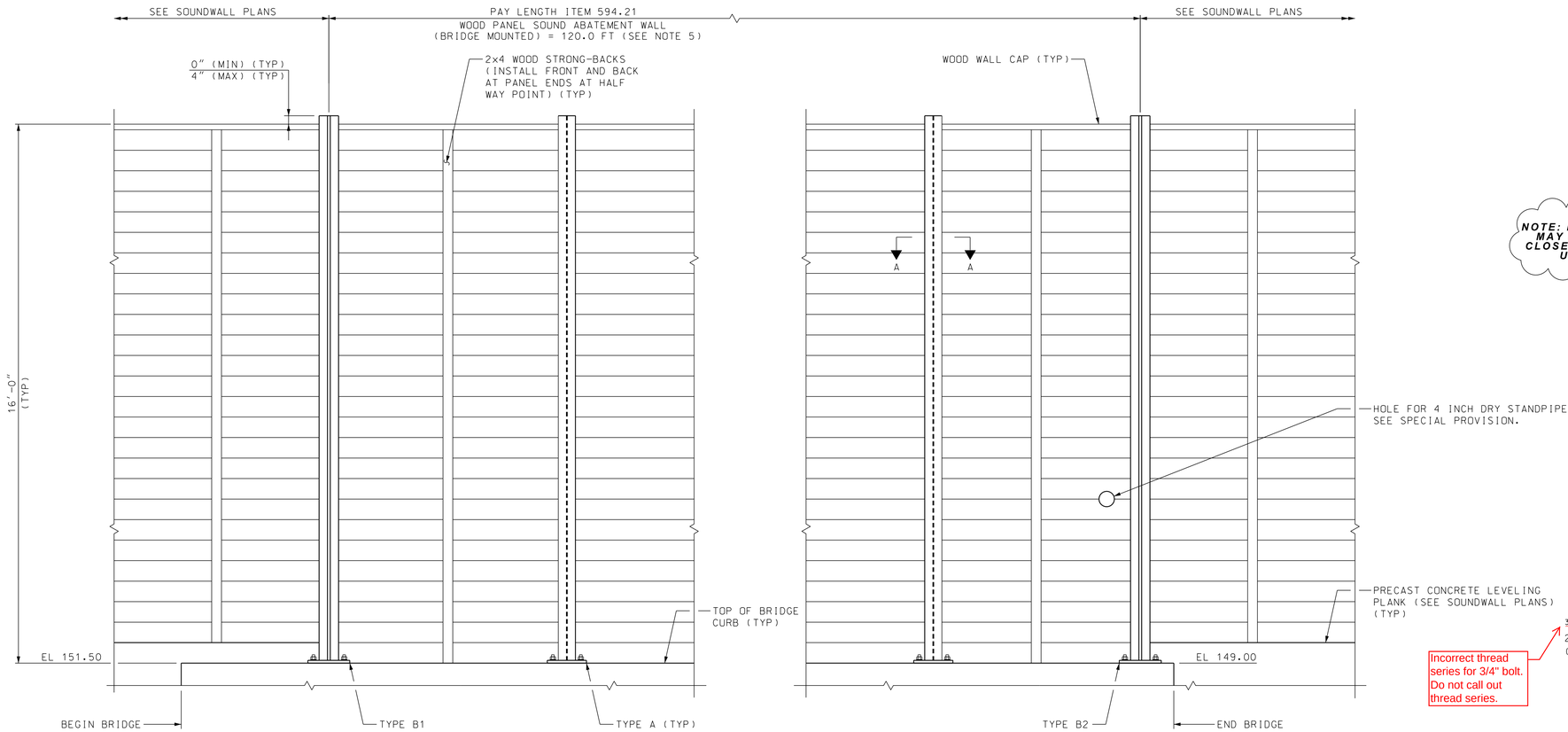

BRIDGE SOUNDWALL ELEVATION

(BRIDGE RAIL AND DECK NOT SHOWN)
SCALE: 1/2" = 1'-0"

NOTE: BRIDGE MOUNTED SOUNDWALL AND ANCHORAGE SYSTEM SHALL BE DESIGNED FOR EACH PROJECT.

NOTE: DETAILS AND NOTES MAY NOT BE CURRENT. CLOSELY REVIEW BEFORE USING DETAILS.

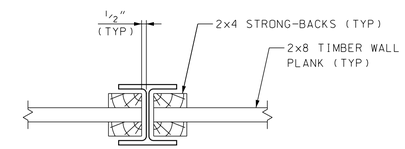

SECTION A-A

SCALE: 1 1/2" = 1'-0"

Incorrect thread series for 3/4" bolt. Do not call out thread series.

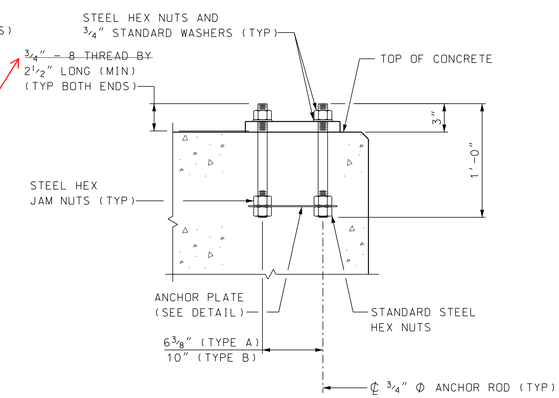

SECTION B-B

(ANCHOR ROD DETAIL)
SCALE: 1 1/2" = 1'-0"

SAMPLE PLAN

DATE: 09-2010

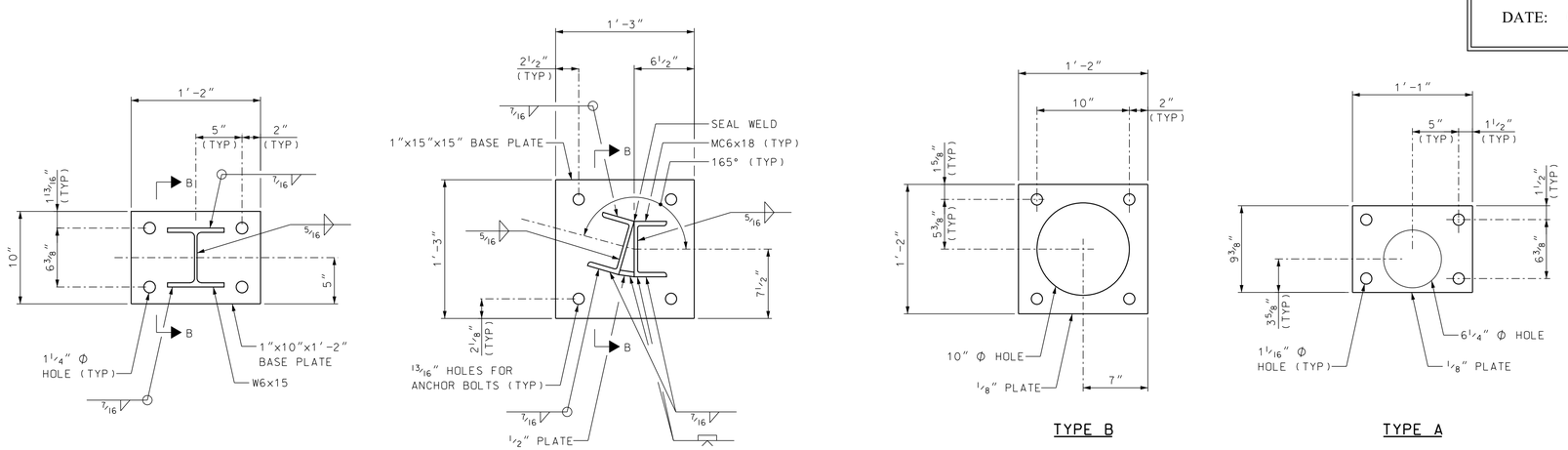

TYPE A

TYPE B
(TYPE B1 SHOWN, TYPE B2 OPPOSITE HAND)

POST AND PLATE DETAILS

SCALE: 1 1/2" = 1'-0"

TYPE B

TYPE A

ANCHOR PLATE DETAILS

SCALE: 1 1/2" = 1'-0"

NOTES:

1. THE STEEL SHALL MEET THE REQUIREMENTS OF SECTION 550 OF THE STANDARD SPECIFICATIONS. STEEL SHALL BE ASTM A 572, GRADE 50 GALVANIZED, EXCEPT ANCHOR PLATES MAY BE ASTM A36.
2. BASE PLATES SHALL SIT UPON 1/8" ELASTOMERIC BEARING PADS CONFORMING TO AASHTO M251.
3. FOR GALVANIZING INFORMATION, SEE BRIDGE SHEET 34, NOTE 14.
4. SEE SOUNDWALL PLANS FOR WOOD MATERIALS AND DETAILS.
5. SEE BRIDGE SHEET 28 FOR SOUNDWALL POST LAYOUT.

STATE OF NEW HAMPSHIRE
DEPARTMENT OF TRANSPORTATION * BUREAU OF BRIDGE DESIGN

TOWN SALEM | BRIDGE NO. 076/063 | STATE PROJECT 13933D

LOCATION I-93 SB OVER NH 38

REVISIONS AFTER PROPOSAL	BY	DATE	BY	DATE
	DESIGNED	09/10	CHECKED	09/10
	DRAWN	09/10	CHECKED	09/10
	QUANTITIES		CHECKED	

ISSUE DATE | FEDERAL PROJECT NO. | SHEET NO.
REV. DATE

BRIDGE SHEET OF 36
FILE NUMBER 110-1-2
TOTAL SHEETS 658

VHB Vanasse Hangen Brustlin, Inc.

PLOT DATE	DRAWING NAME	SHEET SCALE
9/28/2010	DRAWING NAME	AS NOTED

Hubbard, Angela

From: Hubbard, Angela
Sent: Wednesday, March 07, 2018 1:36 PM
To: Adams, Joseph; Brogan, Philip; Daigle, Kevin; Goulas, Nicholas; Guptill, Sue; Hozza, Jacqueline; Janssen, Aaron; Juliano, Robert; Kleiner, Ron; Landry, Robert; Licciardi, Michael; Noyes, Chelsea; Parenteau, Pierre; Poisson, John; Qurreh, Laith; Saffian, Bill; Sargent, John; Scott, David; Tremblay, Jason; Wagner, Mark; Weatherbee, Anthony; Zoller, Jerry
Subject: Final decision for Modulus of Elasticity

Designers,

The modulus of elasticity equation was changed in AASHTO to encompass compressive strengths up to 15 ksi and unit weights between 0.090 and 0.155 kcf. Our decks are typically 4 ksi, 0.145 kcf.

I ran some designs using n=7 vs n=8. The value is used for checking cracking in deck design and there is no major difference. I ran Merlin-Dash for a compact and non-compact composite girder. For a non-compact girder, 160 ft. long 65.75-in. deep simple span, the max. difference was in the total positive stress of the beam, 0.50 ksi greater stress for n=8. The compact girder is a W36x182, 52 ft. long. See below.

Unless a designer designs right up to the maximum capacity, which they shouldn't, there should be no issue if a designer uses the new equation (n=7) and the checker using the old equation (n=8). Therefore, I will **not** be noting in the Bridge Manual what equation a designer should use. According to AASHTO the designer can use either.

n=8 (non-compact girder)

TABLE 1.2.9.5C=STRENGTH I TOTAL (1.25DC+1.50DW+1.75(LL+I)) STRESS SUMMARY

SP NO	IN NO	D FROM L SUPT (ft)	YIELD STRESS Fy (ksi) TOP	YIELD STRESS Fy (ksi) BOT	TOTAL POSITIVE ,(ksi) CONCR. TOP	TOTAL POSITIVE ,(ksi) STEEL BEAM TOP	TOTAL POSITIVE ,(ksi) STEEL BEAM BOT	TOTAL NEGATIVE ,(ksi) CONCR. TOP	TOTAL NEGATIVE ,(ksi) STEEL BEAM TOP	TOTAL NEGATIVE ,(ksi) STEEL BEAM BOT
1	0	0.00	50.	50.	0.00	0.00	0.00	0.00	0.00	0.00
1	1	16.00	50.	50.	-0.58	-16.05	19.17	-0.08	-13.46	11.00
1	2	32.00	50.	50.	-1.03	-28.50	34.00	-0.15	-23.93	19.55
1	3	48.00	50.	50.	-1.34	-37.37	44.49	-0.20	-31.41	25.66
1	4	64.00	50.	50.	-1.53	-42.68	50.76	-0.22	-35.90	29.33
1	5	80.00	50.	50.	-1.58	-44.42	52.75	-0.23	-37.39	30.55
1	6	96.00	50.	50.	-1.53	-42.68	50.76	-0.22	-35.90	29.33
1	7	112.00	50.	50.	-1.34	-37.38	44.50	-0.20	-31.42	25.67
1	8	128.00	50.	50.	-1.03	-28.52	34.01	-0.15	-23.94	19.57
1	9	144.00	50.	50.	-0.58	-16.07	19.19	-0.08	-13.48	11.02
1	10	160.00	50.	50.	0.00	0.00	0.00	0.00	0.00	0.00

TABLE 1.2.8.2=MAXIMUM LIVE LOAD DEFLECTION FOR COMPOSITE CONSTRUCTION

(UNFACTORED)

SPAN NO.	D FROM L SUPT (ft)	NUMBER OF LANE AND DIST. FACTOR FOR LL DEFL.		LL + I. DEFLECTION (inch)	GOVERN. LOAD TYPE	1/800 OF SPAN L AASHTO 2.5.2.6.2	ROTATION [5] Rad.
1	80.00	2	0.400	-1.202	MAX HL-93	2.40	0.00434
				0.032	MIN		
				-0.823	MAX LANE		
				0.032	MIN LANE		
		3	0.600	-1.803	MAX HL-93	2.40	0.00434
				0.048	MIN		
				-1.235	MAX LANE		
				0.048	MIN LANE		

n=7 (non-compact girder)

TABLE 1.2.9.5C=STRENGTH I TOTAL (1.25DC+1.50DW+1.75(LL+I)) STRESS SUMMARY

SP NO	IN NO	D FROM L SUPT (ft)	YIELD STRESS Fy (ksi) TOP	YIELD STRESS Fy (ksi) BOT	TOTAL POSITIVE, (ksi) CONCR. TOP	TOTAL POSITIVE, (ksi) STEEL BEAM TOP	TOTAL POSITIVE, (ksi) STEEL BEAM BOT	TOTAL NEGATIVE, (ksi) CONCR. TOP	TOTAL NEGATIVE, (ksi) STEEL BEAM TOP	TOTAL NEGATIVE, (ksi) STEEL BEAM BOT
1	0	0.00	50.	50.	0.00	0.00	0.00	0.00	0.00	0.00
1	1	16.00	50.	50.	-0.60	-15.59	18.98	-0.09	-13.34	10.97
1	2	32.00	50.	50.	-1.06	-27.69	33.67	-0.16	-23.71	19.51
1	3	48.00	50.	50.	-1.38	-36.30	44.06	-0.21	-31.12	25.60
1	4	64.00	50.	50.	-1.58	-41.47	50.28	-0.24	-35.57	29.26
1	5	80.00	50.	50.	-1.63	-43.16	52.25	-0.25	-37.06	30.48
1	6	96.00	50.	50.	-1.58	-41.47	50.28	-0.24	-35.58	29.27
1	7	112.00	50.	50.	-1.38	-36.31	44.07	-0.21	-31.13	25.61
1	8	128.00	50.	50.	-1.06	-27.70	33.69	-0.16	-23.73	19.52
1	9	144.00	50.	50.	-0.60	-15.61	19.01	-0.09	-13.36	10.99
1	10	160.00	50.	50.	0.00	0.00	0.00	0.00	0.00	0.00

TABLE 1.2.8.2=MAXIMUM LIVE LOAD DEFLECTION FOR COMPOSITE CONSTRUCTION

(UNFACTORED)

SPAN NO.	D FROM L SUPT (ft)	NUMBER OF LANE AND DIST. FACTOR FOR LL DEFL.		LL + I. DEFLECTION (inch)	GOVERN. LOAD TYPE	1/800 OF SPAN L AASHTO 2.5.2.6.2	ROTATION [5] Rad.
1	80.00	2	0.400	-1.160	MAX HL-93	2.40	0.00419
				0.031	MIN		
				-0.795	MAX LANE		
				0.031	MIN LANE		
		3	0.600	-1.740	MAX HL-93	2.40	0.00419
				0.046	MIN		
				-1.192	MAX LANE		
				0.046	MIN LANE		

n=8 (compact girder)

TABLE 1.2.9.5C=STRENGTH I TOTAL (1.25DC+1.50DW+1.75(LL+I)) STRESS SUMMARY

SP NO	IN NO	D FROM L SUPT (ft)	YIELD STRESS Fy (ksi) TOP	YIELD STRESS Fy (ksi) BOT	TOTAL POSITIVE ,(ksi) CONCR. TOP	TOTAL POSITIVE ,(ksi) STEEL BEAM TOP	TOTAL POSITIVE ,(ksi) STEEL BEAM BOT	TOTAL NEGATIVE ,(ksi) CONCR. TOP	TOTAL NEGATIVE ,(ksi) STEEL BEAM TOP	TOTAL NEGATIVE ,(ksi) STEEL BEAM BOT
1	0	0.00	36.	36.	0.00	0.00	0.00	0.00	0.00	0.00
1	1	5.20	36.	36.	-0.37	-4.31	11.47	-0.04	-3.44	4.32
1	2	10.40	36.	36.	-0.64	-7.62	20.07	-0.07	-6.11	7.68
1	3	15.60	36.	36.	-0.82	-9.93	25.80	-0.09	-8.02	10.08
1	4	20.80	36.	36.	-0.92	-11.31	29.14	-0.11	-9.16	11.52
1	5	26.00	36.	36.	-0.93	-11.72	29.85	-0.11	-9.55	12.00
1	6	31.20	36.	36.	-0.92	-11.31	29.14	-0.11	-9.17	11.53
1	7	36.40	36.	36.	-0.82	-9.94	25.81	-0.09	-8.03	10.09
1	8	41.60	36.	36.	-0.64	-7.63	20.09	-0.07	-6.12	7.70
1	9	46.80	36.	36.	-0.37	-4.32	11.50	-0.04	-3.45	4.35
1	10	52.00	36.	36.	0.00	0.00	0.00	0.00	0.00	0.00

TABLE 1.2.8.2=MAXIMUM LIVE LOAD DEFLECTION FOR COMPOSITE CONSTRUCTION

(UNFACTORED)

SPAN NO.	D FROM L SUPT (ft)	NUMBER OF LANE AND DIST. FACTOR FOR LL DEFL.		LL + I. DEFLECTION (inch)	GOVERN. LOAD TYPE	1/800 OF SPAN L AASHTO 2.5.2.6.2	ROTATION [5] Rad.
1	26.00	2	0.500	-0.244	MAX HL-93	0.78	0.00187
				0.023	MIN		
				-0.063	MAX LANE		
				0.023	MIN LANE		
		3	0.750	-0.367	MAX HL-93	0.78	0.00187
				0.035	MIN		
				-0.095	MAX LANE		
				0.035	MIN LANE		

n=8 (compact girder)

TABLE 1.2.9.5C=STRENGTH I TOTAL (1.25DC+1.50DW+1.75(LL+I)) STRESS SUMMARY

SP NO	IN NO	D FROM L SUPT (ft)	YIELD STRESS Fy (ksi) TOP	BOT	TOTAL POSITIVE ,(ksi) CONCR. TOP	STEEL BEAM TOP	STEEL BEAM BOT	TOTAL NEGATIVE ,(ksi) CONCR. TOP	STEEL BEAM TOP	STEEL BEAM BOT
1	0	0.00	36.	36.	0.00	0.00	0.00	0.00	0.00	0.00
1	1	5.20	36.	36.	-0.38	-4.07	11.31	-0.04	-3.38	4.30
1	2	10.40	36.	36.	-0.67	-7.21	19.78	-0.07	-6.01	7.65
1	3	15.60	36.	36.	-0.85	-9.41	25.43	-0.10	-7.89	10.04
1	4	20.80	36.	36.	-0.95	-10.72	28.72	-0.11	-9.01	11.47
1	5	26.00	36.	36.	-0.97	-11.12	29.42	-0.12	-9.39	11.95
1	6	31.20	36.	36.	-0.95	-10.72	28.73	-0.11	-9.02	11.48
1	7	36.40	36.	36.	-0.85	-9.42	25.44	-0.10	-7.89	10.05
1	8	41.60	36.	36.	-0.67	-7.22	19.80	-0.07	-6.02	7.67
1	9	46.80	36.	36.	-0.38	-4.09	11.33	-0.04	-3.40	4.33
1	10	52.00	36.	36.	0.00	0.00	0.00	0.00	0.00	0.00

TABLE 1.2.8.2=MAXIMUM LIVE LOAD DEFLECTION FOR COMPOSITE CONSTRUCTION

(UNFACTORED)

SPAN NO.	D FROM L SUPT (ft)	NUMBER OF LANE AND DIST. FACTOR FOR LL DEFL.		LL + I. DEFLECTION (inch)	GOVERN. LOAD TYPE	1/800 OF SPAN L AASHTO 2.5.2.6.2	ROTATION [5] Rad.
1	26.00	2	0.500	-0.237	MAX HL-93	0.78	0.00181
				0.023	MIN		
				-0.061	MAX LANE		
				0.023	MIN LANE		
		3	0.750	-0.356	MAX HL-93	0.78	0.00181
				0.034	MIN		
				-0.092	MAX LANE		
				0.034	MIN LANE		

Angela Hubbard
Project Engineer
NH DOT - Bureau of Bridge Design
7 Hazen Dr
Concord, NH 03302
mailto:Angela.Hubbard@dot.nh.gov
(603)271-6567
(603)271-2759 fax

From: Hubbard, Angela
Sent: Wednesday, February 28, 2018 11:34 AM
To: Adams, Joseph; Brogan, Philip; Daigle, Kevin; Goulas, Nicholas; Guptill, Sue; Hozza, Jacqueline; Janssen, Aaron; Juliano, Robert; Kleiner, Ron; Landry, Robert; Licciardi, Michael; Noyes, Chelsea; Parenteau, Pierre; Poisson, John; Qurreh, Laith; Saffian, Bill; Sargent, John; Scott, David; Tremblay, Jason; Wagner, Mark; Weatherbee, Anthony; Zoller, Jerry
Subject: Additional info for Modulus of Elasticity

Additional info:

Enclosed is an article by Dr. Mertz that states why the change was made to AASHTO. The new equation was revised to include a range of concrete (light weight to high strength).

CSI program defaults using n=8 for 4,000 psi. The designer would need to alter the weight of concrete to get n=7. The new version may have updated this. Merlin Dash defaults n=8 but can be changed by the designer. Last update of Merlin Dash was 1 year ago.

Another option:
State in the manual to use the old equation for normal weight concrete and the new equation for light weight or high strength.

I would appreciate comments emailed back to me.

Thanks,
Angie

From: Hubbard, Angela
Sent: Tuesday, February 27, 2018 9:25 AM
To: Adams, Joseph; Brogan, Philip; Daigle, Kevin; Goulas, Nicholas; Guptill, Sue; Hozza, Jacqueline; Janssen, Aaron; Juliano, Robert; Kleiner, Ron; Landry, Robert; Licciardi, Michael; Noyes, Chelsea; Parenteau, Pierre; Poisson, John; Qurreh, Laith; Saffian, Bill; Sargent, John; Scott, David; Tremblay, Jason; Wagner, Mark; Weatherbee, Anthony; Zoller, Jerry
Subject: Modulus of Elasticity

Designers,

AASHTO changed the equation for modulus of elasticity as noted below. This new equation changes the Ec which effects the modular ratio, n. AASHTO states the old equation can be used as noted in the commentary. Designers have come up with different design because of this. Also, should we round it or not.

For 4,000 psi, n = **7 (7.25)** (new AASHTO equation), n = **8 (7.96)** (old AASHTO equation).

Please **VOTE** using the voting button on which equation we should use so we can be consistent and I can put what to use in the Bridge Manual.

If we decide to use the new equation, I will need to redo the old chart that I put in the manual (see below).

5.4.2.4—Modulus of Elasticity

In the absence of measured data, the modulus of elasticity, E_c, for normal weight concrete with design compressive strengths up to 15.0 ksi and lightweight concrete up to 10.0 ksi, with unit weights between 0.090 and 0.155 kcf, may be taken as:

C5.4.2.4

See commentary on strength in Article 5.4.2.1.

For normal weight concrete with $w_c = 0.145$ kcf, E_c may be taken as:

$$E_c = 2{,}500 f_c'^{0.33} \qquad \text{(C5.4.2.4-1)}$$

$$E_c = 120{,}000 K_1 w_c^{2.0} f_c'^{0.33} \quad (5.4.2.4\text{-}1)$$

New equation

where:

K_1 = correction factor for source of aggregate to be taken as 1.0 unless determined by physical test, and as approved by the owner

w_c = unit weight of concrete (kcf); refer to Table 3.5.1-1 or Article C5.4.2.4

f'_c = compressive strength of concrete for use in design (ksi)

Eqs. 5.4.2.4-1 and C5.4.2.4-1 are based upon the research of Greene and Graybeal (2013).

For normal weight concrete with w_c = 0.145 kcf and design compressive strengths up to 10.0 ksi, E_c may be determined from either of the following:

$$E_c = 33{,}000 K_1 w_c^{1.5} \sqrt{f_c'} \quad (C5.4.2.4\text{-}2$$

Old equation

$$E_c = 1{,}820 \sqrt{f'_c} \quad (C5.4.2.4\text{-}3$$

Eqs. C5.4.2.4-2 and C5.4.2.4-3 are the traditional equations which do not fully reflect lightweight concrete and higher compressive strengths.

Test data show that the modulus of elasticity of concrete is influenced by the stiffness of the aggregate. The factor K_1 is included to allow the calculated modulus to be adjusted for different types of aggregate and local materials. Unless a value has been determined by physical tests, K_1 should be taken as 1.0. Use of a measured K_1 factor permits a more accurate prediction of modulus of elasticity and other values that utilize it.

Table that is in the New Bridge Manual from old Bridge Manual (uses old equation).

CONCRETE (PSI)	f'_c	3,000	3,000	4,000
REBAR	GRADE	40	60	60
PROPERTIES (PSI)	f_c	1,200	1,200	1,600
(PSI)	f_y	40,000	60,000	60,000
(PSI)	f_s	20,000	24,000	24,000
	n	9	9	8
	k	.351	.310	.348
	j	.883	.897	.884
(KSI)	K	.186	.167	.246

EFFECTIVE DEPTH*	$d_{req'd}$	$\sqrt{5.38 M_T}$	$\sqrt{5.99 M_T}$	$\sqrt{4.06 M_T}$
AREA STEEL REQ'D	$A_{s\,req'd}$	$\frac{.680 M_T}{d_{act}}$	$\frac{.557 M_T}{d_{act}}$	$\frac{.566 M_T}{d_{act}}$

* FOR A ONE-FOOT SECTION UNITS: M_T = KIP-FT. d = INCHES A_s = SQ. IN.

DERIVATION:

GIVEN: $E_s = 29{,}000{,}000$ psi

$E_c = 57{,}000\sqrt{f'_c}$ psi

$n = E_s / E_c$

$r = f_s / f_c$

$k = n/(n+r)$

$j = 1 - k/3$

$K = \frac{1}{2} f_c j k$

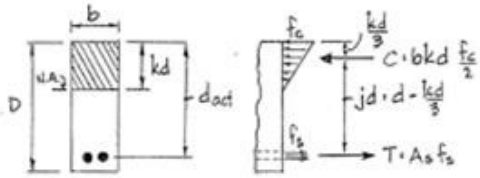

CONCRETE BEAM FORCE DIAGRAM

FORMULA ($d_{req'd}$) FROM COMPRESSION FORCE:

$$M_T = Cjd = bkd\frac{f_c}{2}jd = bd^2\frac{f_c}{2}jk = bd^2K, \text{ where } K = \frac{f_c}{2}jk$$

$$d_{req'd} = \sqrt{\frac{2M_T}{bjkf_c}} = \sqrt{\frac{M_T}{bK}}, \text{ FOR } b = 1.0' \quad \left[\text{e.g. } d_{req'd} = \sqrt{\frac{M_T}{(1.0)(.246)}} = \sqrt{4.06 M_T}\right]$$

FORMULA ($A_{s\,req'd}$) FROM TENSION FORCE:

$$M_T = Tjd = A_s \cdot f_s \cdot j \cdot d$$

$$A_{s\,req'd} = M_T / f_s \cdot j \cdot d \quad \left[\text{e.g. } A_{s\,req'd} = \frac{(12^{in}/ft)M_T}{(24)(.884)d} = \frac{.566 M_T}{d_{act}}\right]$$

REFERENCES: (1) AASHTO (2) DESIGN OF CONCRETE STRUCTURES, WINTER
(3) FOUNDATION ANALYSIS AND DESIGN, BOWLES

Thanks,

Angela Hubbard
Project Engineer
NH DOT - Bureau of Bridge Design
7 Hazen Dr
Concord, NH 03302
mailto:Angela.Hubbard@dot.nh.gov
(603)271-6567
(603)271-2759 fax

2015 Interim Changes Related to Concrete Structures

by Dr. Dennis R. Mertz

On July 22 through 26, 2014, the American Association of State Highway and Transportation Officials (AASHTO) Subcommittee on Bridges and Structures (SCOBS), chaired by Gregg Frederick of Wyoming, convened its annual meeting in Columbus, Ohio. During the meeting hosted by the Ohio Department of Transportation, SCOBS considered and adopted five agenda items specifically related to concrete structures. Technical Committee T-10, Concrete Design, chaired by Loren Risch of Kansas, moved Agenda Items 33 through 37 to the subcommittee ballot for consideration in Columbus after years of development. These agenda items represent revisions and additions to the *AASHTO LRFD Bridge Design Specifications*.

This column reviews these concrete-structures agenda items, which were approved by SCOBS, are included in the 2015 Interim Revisions to the seventh edition of the AASHTO LRFD specifications.

The first three Agenda Items—33, 34, and 35—extend selected concrete-structure provisions to members using specified concrete strengths up to 15 ksi.

Agenda Item 33

Agenda Item 33 combines the recommendations of the National Cooperative Highway Research Program (NCHRP) Report 603, *Transfer, Development, and Splice Length for Strand/Reinforcement in High-Strength Concrete*, by Julio A. Ramirez of Purdue University and Bruce W. Russell of Oklahoma State University and the provisions of the American Concrete Institute (ACI) ACI 318-11, *Building Code Requirements for Structural Concrete*, to include updated provisions for specified concrete strengths up to 15 ksi. The 2013 interim revisions already extended the provision of Articles 5.11.2.1, 5.11.2.4, and 5.11.5.3.1 to 15 ksi. This agenda item extends all the provisions regarding development and splice lengths that can be extended to 15 ksi based upon completed research. In general, development lengths, and lap splice lengths that are based upon them, increase based upon experimental data.

Agenda Item 34

Based mostly upon NCHRP Report 595, *Application of the LRFD Bridge Design Specifications to High-Strength Structural Concrete: Flexure and Compression Provisions*, by a research team led by Sami Rizkalla of North Carolina State University, Agenda Item 34 extends the applicability of the flexural and compression design provisions for reinforced and prestressed concrete members to concrete strengths up to 15 ksi. Provisions extending the modulus of elasticity equations for both normal weight and lightweight concrete for concrete strengths up to 15 ksi are based upon the Federal Highway Administration (FHWA) Report FHWA-HRT-13-062, *Lightweight Concrete: Mechanical Properties*, by Ben Graybeal and Gary Greene.

One of the more significant sub-items in Agenda Item 34 is the revision of the relationship for modulus of elasticity in Article 5.4.2.4. The new equation,

$$E_c = 120{,}000 K_1 w_c^2 f'_c{}^{0.33}$$

where

K_1 = correction factor for source of aggregate to be taken as 1.0 unless determined by physical test, and as approved by the authority of jurisdiction,

w_c = unit weight of concrete (kips/ft^3), and

f'_c = specified compressive strength of concrete (ksi)

is for concretes with unit weights between 0.090 and 0.155 kips/ft^3 and for normal weight concrete with specified compressive strengths up to 15.0 ksi. The new relationship for modulus of elasticity not only yields values consistent with the original relationship for normal weight concrete but also appropriate values for lightweight and higher-strength concrete. The original relationship is retained in the commentary as an alternative.

Agenda Item 35

Agenda Item 35 extends the shear-design provisions in the Sectional Design Model (Article 5.8.3) to concrete compressive strengths up to 15 ksi, based upon NCHRP Report 579, *Application of LRFD Bridge Design Specifications to High-Strength Structural Concrete: Shear Provisions*, by Neil Hawkins and Daniel Kuchma of University of Illinois.

The adoption of Agenda Items 33, 34, and 35, by virtue of extending the applicability to higher strength concretes, is expected to enable:

- current bridge girders to span longer lengths, support heavier loads, or both; and
- shallower concrete sections to be used for some span lengths.

Agenda Item 36

Agenda Item 36 basically represents a clean-up of the commentary to Section 5. It eliminates 26 sets of text, from as little as a single sentence to as much as several paragraphs, throughout the Section 5 commentary. Reasons for removing the commentary items include:

- The deleted material is more appropriately included in the *AASHTO LRFD Bridge Construction Specifications*,
- The deleted commentary is common knowledge to the reader,
- The deleted commentary is dated, and
- The deleted words, while valuable when this provision was first adopted, are of little value in the current edition.

Agenda Item 37

Finally, Agenda Item 37 removes all reference to stress-relieved strands from the *AASHTO LRFD Bridge Design Specifications*, as they are no longer used. In addition, several provisions insert the necessary information on stress-relieved strands into the AASHTO *Manual for Bridge Evaluation* for use in evaluating existing structures.

Interim revisions to the *AASHTO LRFD Bridge Design Specifications* are considered annually by SCOBS. Their next meeting is scheduled for April 19 through 23, 2015, in Saratoga Springs, N.Y.

EDITOR'S NOTE

If you would like to have a specific provision of the AASHTO LRFD Bridge Design Specifications *explained in this series of articles, please contact us at www.aspirebridge.org.*

Beam Details