NEW HAMPSHIRE DEPARTMENT OF TRANSPORTATION

BUREAU OF BRIDGE DESIGN

DESCRIPTION:	DATE REVISED:
EXPANSION JOINTS - WELD DETAIL FOR FIELD SPLICE: STRIP SEAL	1-14-14

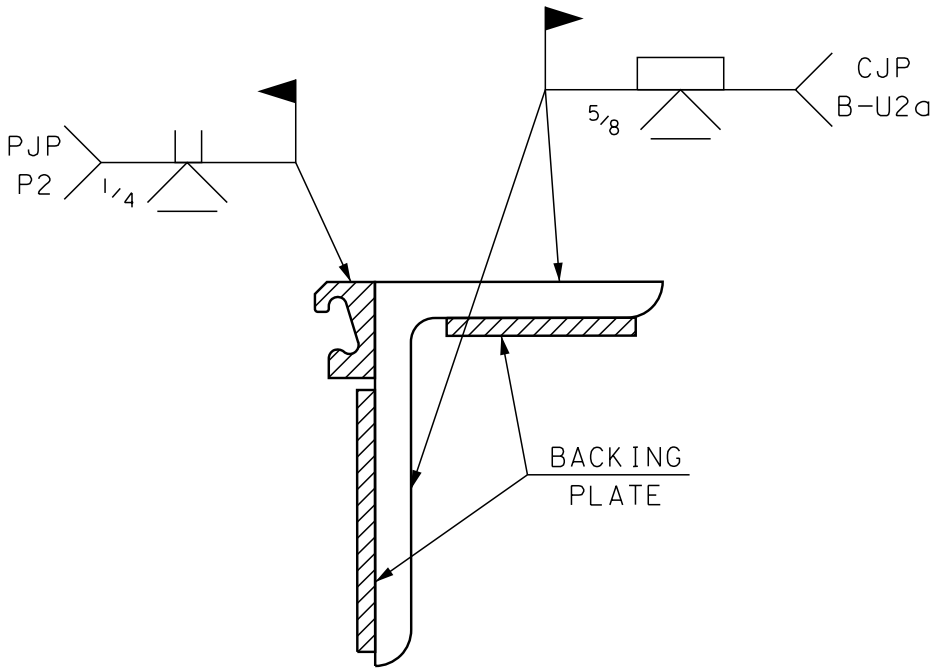

FIELD SPLICE WELD DETAIL-
STRIP SEAL

NEW HAMPSHIRE DEPARTMENT OF TRANSPORTATION

BUREAU OF BRIDGE DESIGN

DESCRIPTION:	DATE REVISED:
EXPANSION JOINTS - WELD DETAIL FOR FIELD SPLICE: COMPRESSION SEAL	1-14-14

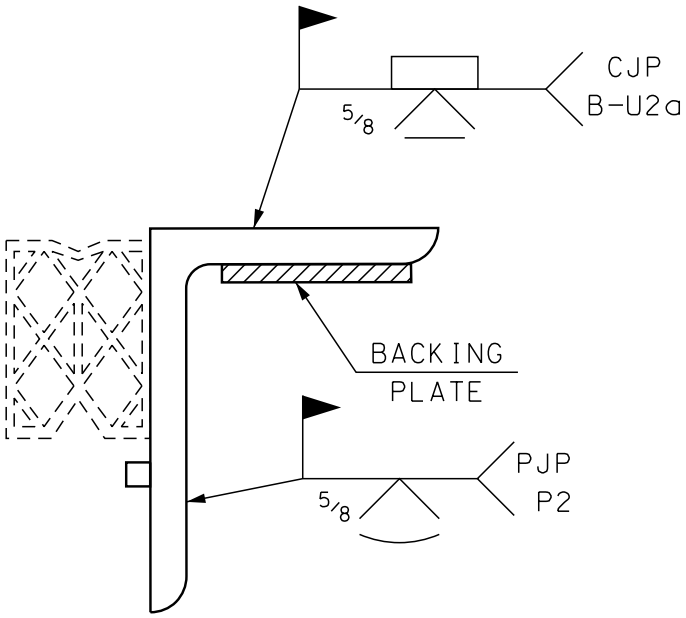

FIELD SPLICE WELD DETAIL-
COMPRESSION SEAL

NEW HAMPSHIRE DEPARTMENT OF TRANSPORTATION

BUREAU OF BRIDGE DESIGN

DESCRIPTION:	DATE REVISED:
EXPANSION JOINTS - WELD DETAIL FOR FIELD SPLICE: FINGER JOINT	2-8-16

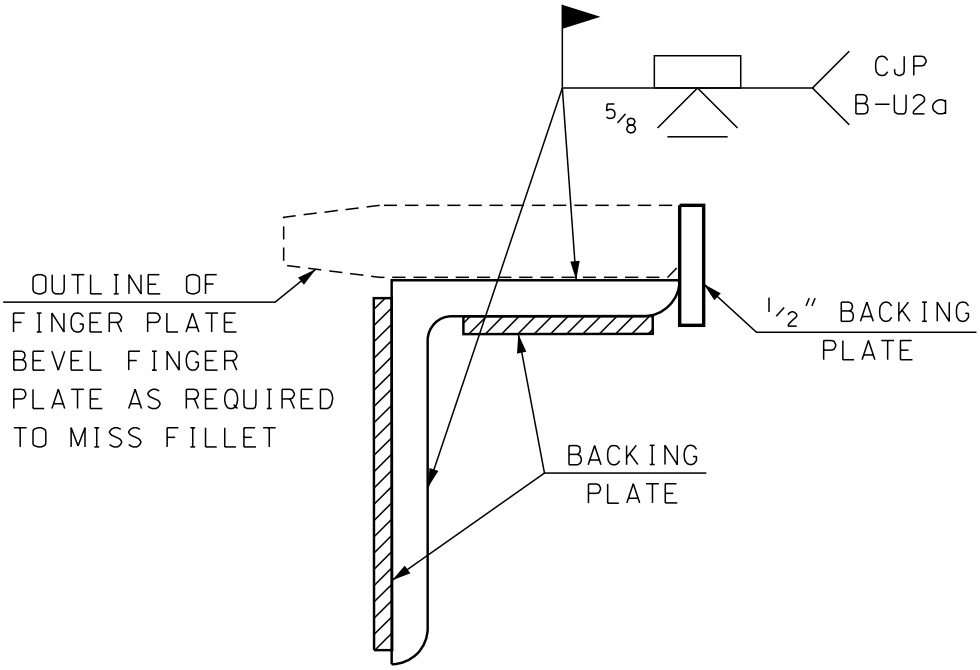

FIELD SPLICE WELD DETAIL - FINGER JOINT