NEW HAMPSHIRE DEPARTMENT OF TRANSPORTATION

BUREAU OF BRIDGE DESIGN

DESCRIPTION: SUBSTRUCTURE DETAILS - TYP. INTEGRAL ABUTMENT SECTION

DATE REVISED: 2/8/2016

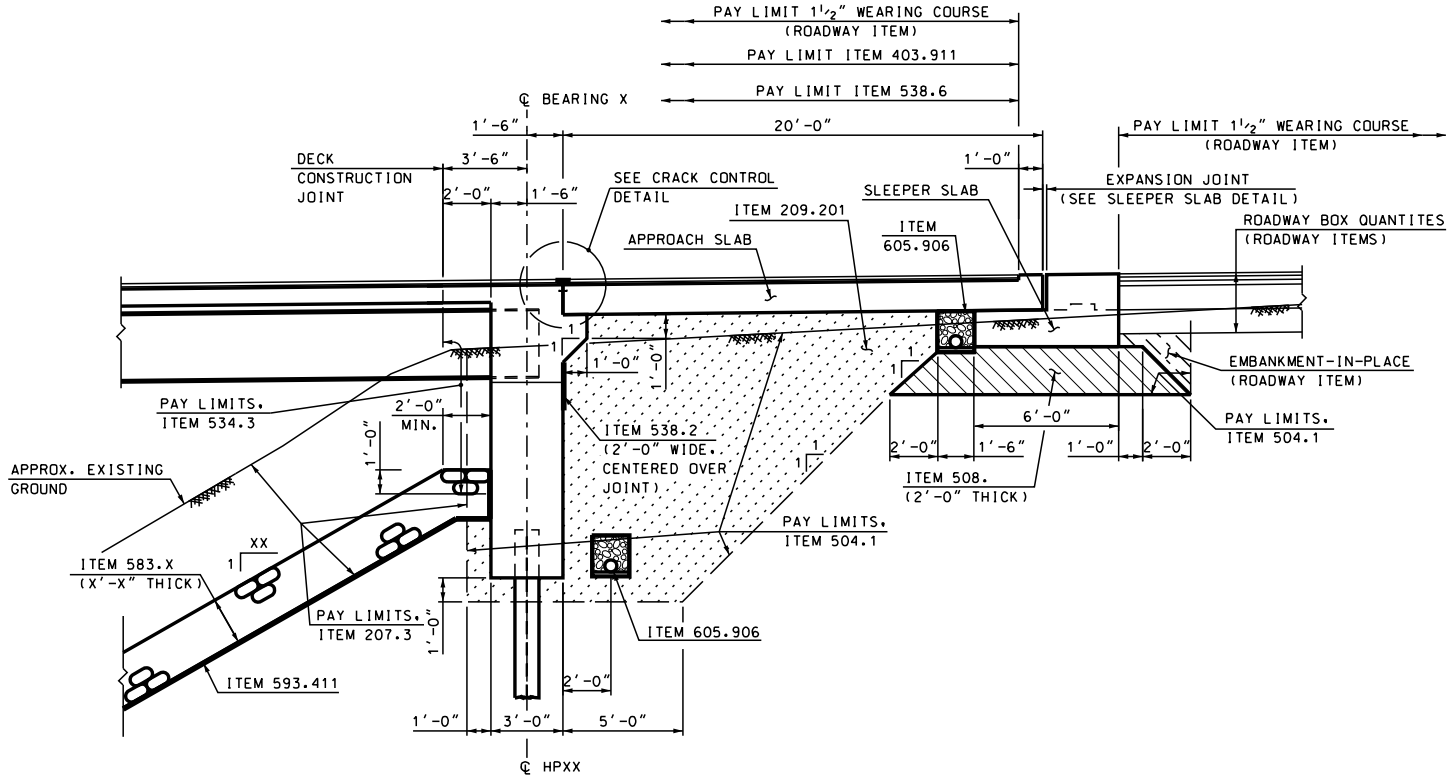

TYPICAL INTEGRAL ABUTMENT SECTION

MODIFY TO FIT PROJECT

NEW HAMPSHIRE DEPARTMENT OF TRANSPORTATION

BUREAU OF BRIDGE DESIGN

DESCRIPTION: SUBSTRUCTURE DETAILS - SLEEPER SLAB DETAIL

DATE REVISED: 2/8/2016

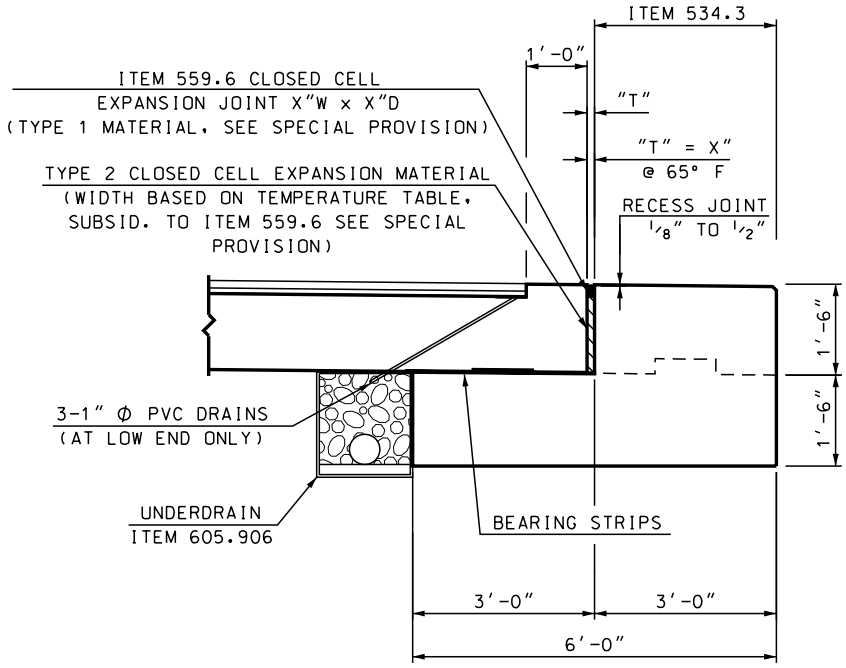

TEMP (°F)	"T" (INCH)
20	XX
35	XX
50	XX
65	XX
80	XX
95	XX

SLEEPER SLAB DETAIL FOR CLOSED CELL EXPANSION JOINT (ITEM 559.6)

SLEEPER SLAB CLOSED CELL EXPANSION JOINT NOTES

1. ITEM 559.6, PREFORMED CLOSED CELL EXPANSION JOINT SYSTEM (F), INCLUDES CLOSED CELL EXPANSION MATERIAL TYPE 1 AND JOINT ADHESIVE AS NOTED IN THE SPECIAL PROVISION.
2. THE CLOSED CELL EXPANSION JOINT, ITEM 559.6 SHALL HAVE A MINIMUM RANGE OF MOVEMENT OF XX" WITH A MINIMUM JOINT OPENING OF XX" AND A MAXIMUM JOINT OPENING OF XX".
3. THE CLOSED CELL EXPANSION JOINT SHALL BE BONDED TO THE SLEEPER SLAB AND APPROACH SLAB USING A JOINT SEAL ADHESIVE RECOMMENDED BY THE MANUFACTURER. SEE THE SPECIAL PROVISION ITEM 559.6.
4. CLOSED CELL EXPANSION MATERIAL TYPE 2 SHALL BE USED TO FORM THE APPROACH SLAB AND SHALL BE SUBSIDIARY TO ITEM 559.6. AFTER THE APPROACH SLAB HAS CURED, REMOVE THE TOP PORTION OF THE TYPE 2 CLOSED CELL MATERIAL DOWN TO A DEPTH EQUAL TO THE CLOSED CELL EXPANSION JOINT TYPE 1 MATERIAL. SEE SPECIAL PROVISION 559.6.

MODIFY TO FIT PROJECT

NEW HAMPSHIRE DEPARTMENT OF TRANSPORTATION

BUREAU OF BRIDGE DESIGN

DESCRIPTION: SUBSTRUCTURE DETAILS - SLEEPER SLAB BEARING STRIP DETAIL

DATE REVISED: 2/8/2016

APPROACH SLAB STRIP:
AT INTERMEDIATE LOCATIONS, BOND RUBBER BACKED SIDE OF A 1'-0" WIDE STRIP TO TOP OF THE APPROACH SLAB STRIP ALONG THE WIDTH OF THE APPROACH SLAB STRIP.

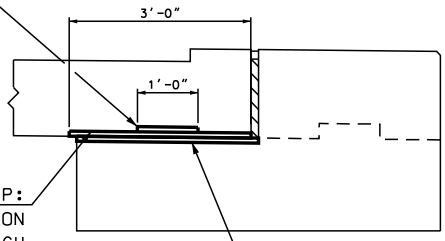

BEARING STRIPS
(RUBBER BACKED UHMW-PE, 1/4" THICK MIN. 3/8" MAX.)
(SEE QUALIFIED PRODUCTS LIST, SECTION 520 FOR MATERIALS & BONDING AGENT) (ALL COSTS SUBSIDIARY TO ITEM 520.0302)

APPROACH SLAB STRIP:
EMBED 3'-0" WIDE SECTION (RUBBER SIDE UP) INTO APPROACH SLAB FOR THE ENTIRE WIDTH.

SLEEPER SLAB STRIP:
GRIND TOP OF SLEEPER SLAB TO A SMOOTH FLAT SURFACE AND BOND RUBBER BACKED SIDE OF 3'-0" WIDE SECTION TO TOP OF SLEEPER SLAB FOR THE ENTIRE LENGTH.

SLEEPER SLAB BEARING STRIP DETAIL

NOT TO SCALE

MODIFY TO FIT PROJECT

NEW HAMPSHIRE DEPARTMENT OF TRANSPORTATION

BUREAU OF BRIDGE DESIGN

DESCRIPTION: SUBSTRUCTURE DETAILS - TYP. APPR. & SLEEPER SLAB REINF. SECTION

DATE REVISED: 2/8/2016

APPROACH AND SLEEPER SLABS NOTES

1. ITEM 544.7, SYNTHETIC FIBER REINFORCEMENT (F), SHALL BE ADDED TO THE CONCRETE USED FOR THE APPROACH SLABS.
2. APPROACH SLABS SHALL BE POURED AFTER THE CONCRETE DECK HAS BEEN CONSTRUCTED.
3. CONCRETE FOR APPROACH SLABS AND SLEEPER SLABS SHALL BE PAID FOR UNDER ITEM 520.0302, CONCRETE CLASS AA, APPROACH SLABS (QC/QA) (F).
4. 3-1" Ø PVC DRAINS SHALL BE INSTALLED (AT THE LOW END ONLY, BOTH CURB LINES) IN A 1/2" DEPRESSION. SET PIPES TO DRAIN INTO THE UNDERDRAIN BELOW THE APPROACH SLAB.
5. UNDERDRAINS SHALL MEET THE REQUIREMENTS OF SECTION 605. UNDERDRAINS SHALL BE PERFORATED, PLACED ON A PREPARED SURFACE WITH THE PERFORATIONS FACING DOWN, AND ON A MINIMUM SLOPE OF 2%. PIPE INVERTS SHALL EXTEND A MINIMUM OF 3" BEYOND THE TOP SURFACE OF THE STONE SLOPE. WITNESS MARKERS SHALL BE PLACED AT THE OUTLET OF EACH DRAIN PIPE.
6. ITEM 534.3, WATER REPELLENT (SILANE-SILOXANE), SHALL BE APPLIED TO THE EXPOSED CONCRETE ON THE TOP OF THE SLEEPER SLAB AND THE APPROACH SLAB ARMOR.

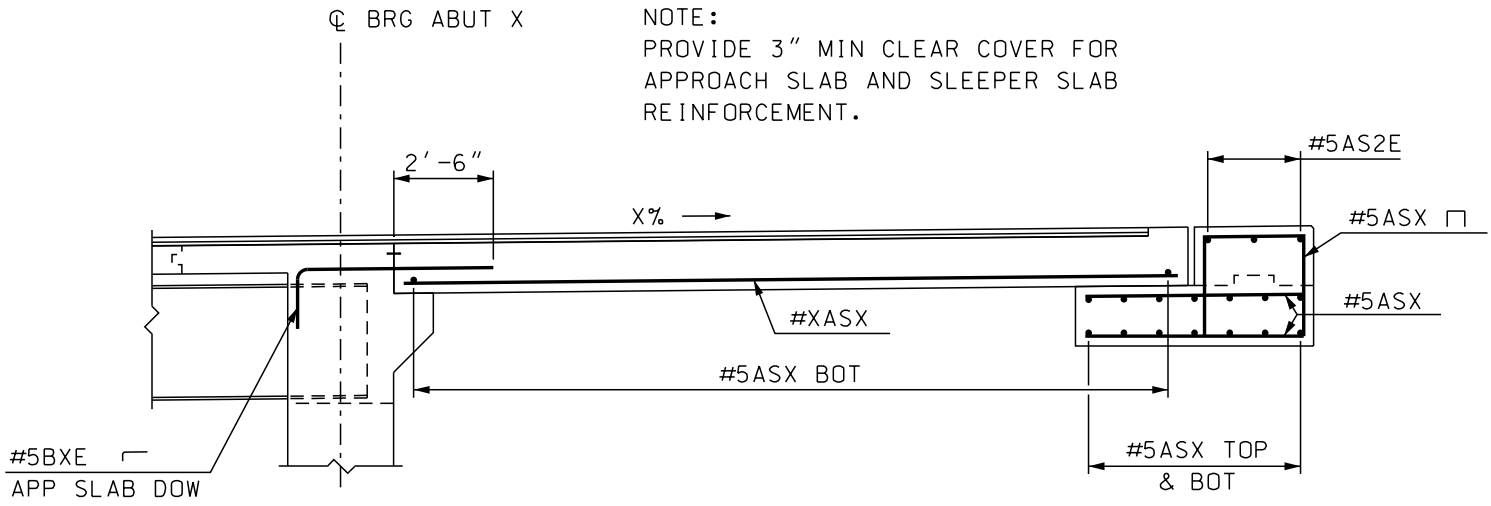

TYP APPROACH AND SLEEPER SLAB REINFORCEMENT

MODIFY TO FIT PROJECT

NEW HAMPSHIRE DEPARTMENT OF TRANSPORTATION

BUREAU OF BRIDGE DESIGN

DESCRIPTION: SUBSTRUCTURE DETAILS - TYP. INTEGRAL ABUT. SECTION

DATE REVISED: 2/8/2016

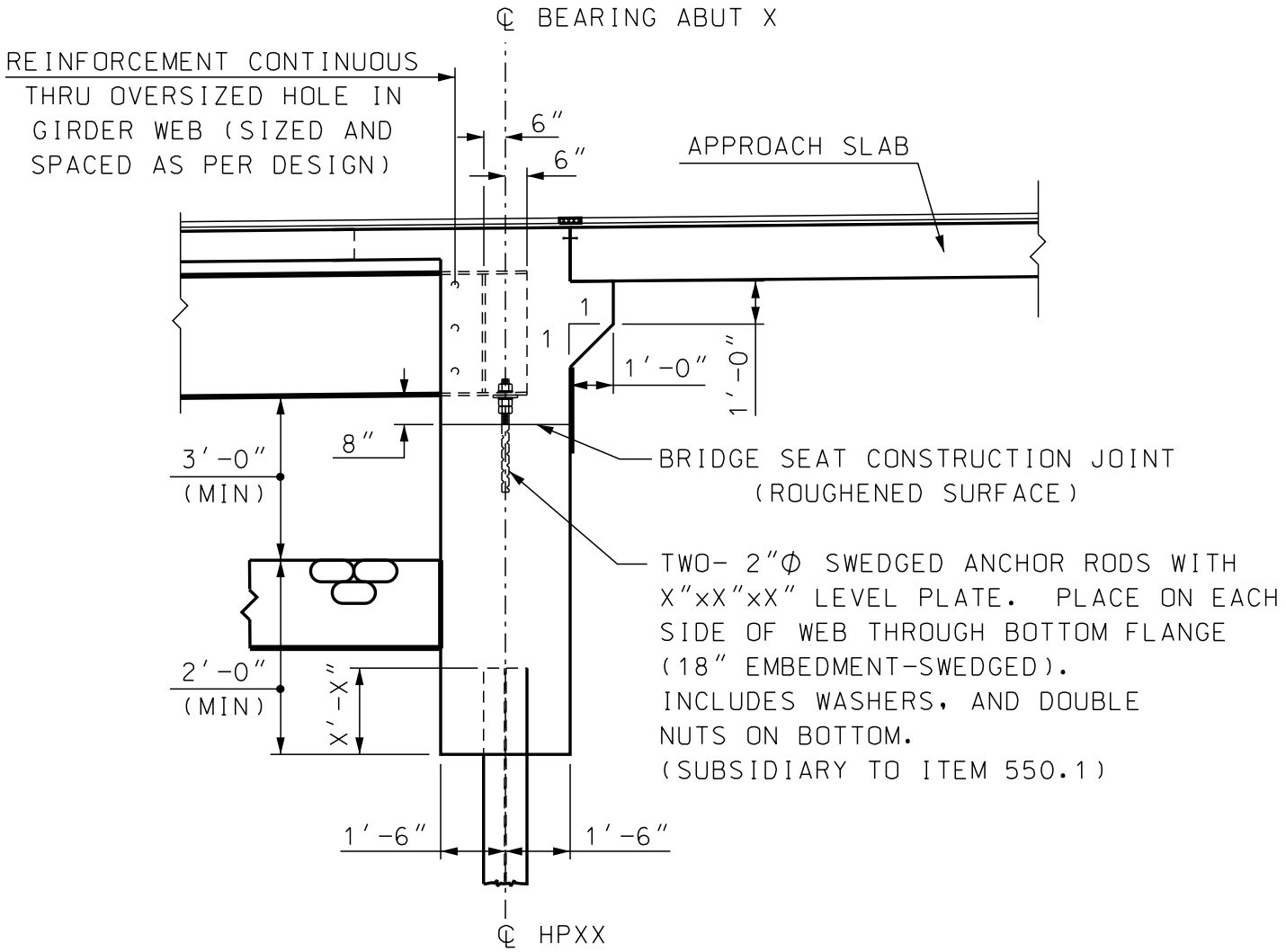

TYPICAL INTEGRAL ABUTMENT SECTION

MODIFY TO FIT PROJECT

NEW HAMPSHIRE DEPARTMENT OF TRANSPORTATION

BUREAU OF BRIDGE DESIGN

DESCRIPTION:	DATE REVISED:
SUBSTRUCTURE DETAILS - TYP. INTEGRAL ABUT. REINF. SECTION	2/8/2016

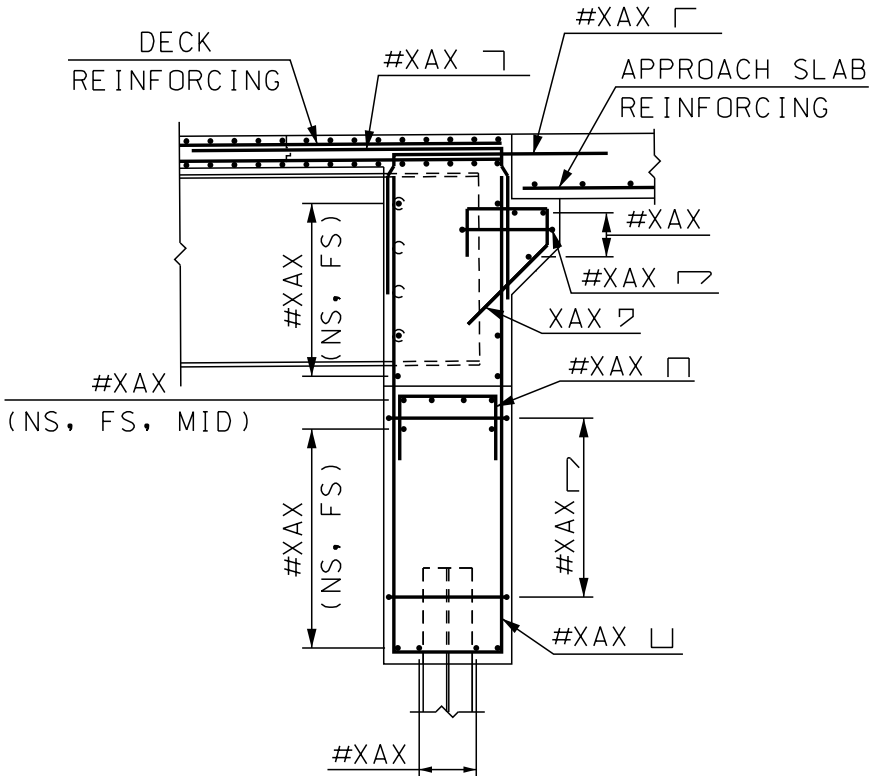

SECTION BETWEEN GIRDERS

MODIFY TO FIT PROJECT

NEW HAMPSHIRE DEPARTMENT OF TRANSPORTATION

BUREAU OF BRIDGE DESIGN

DESCRIPTION: SUBSTRUCTURE DETAILS - TYP. INTEGRAL ABUT. REINF. SECTION

DATE REVISED: 2/8/2016

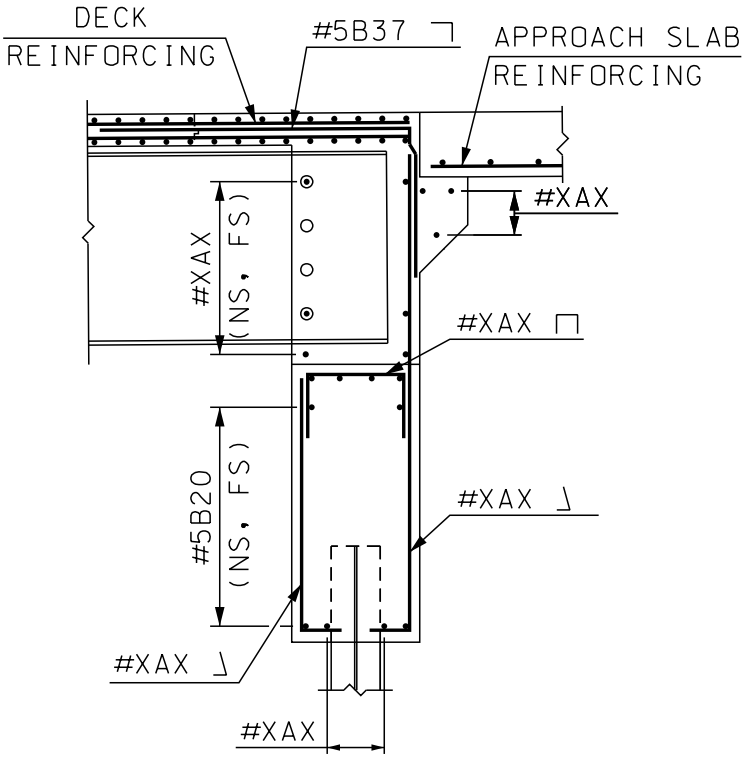

SECTION AT GIRDERS

MODIFY TO FIT PROJECT

NEW HAMPSHIRE DEPARTMENT OF TRANSPORTATION

BUREAU OF BRIDGE DESIGN

DESCRIPTION: SUBSTRUCTURE DETAILS - TYP. SEMI-INTEGRAL ABUTMENT SECTION

DATE REVISED: 2/8/2016

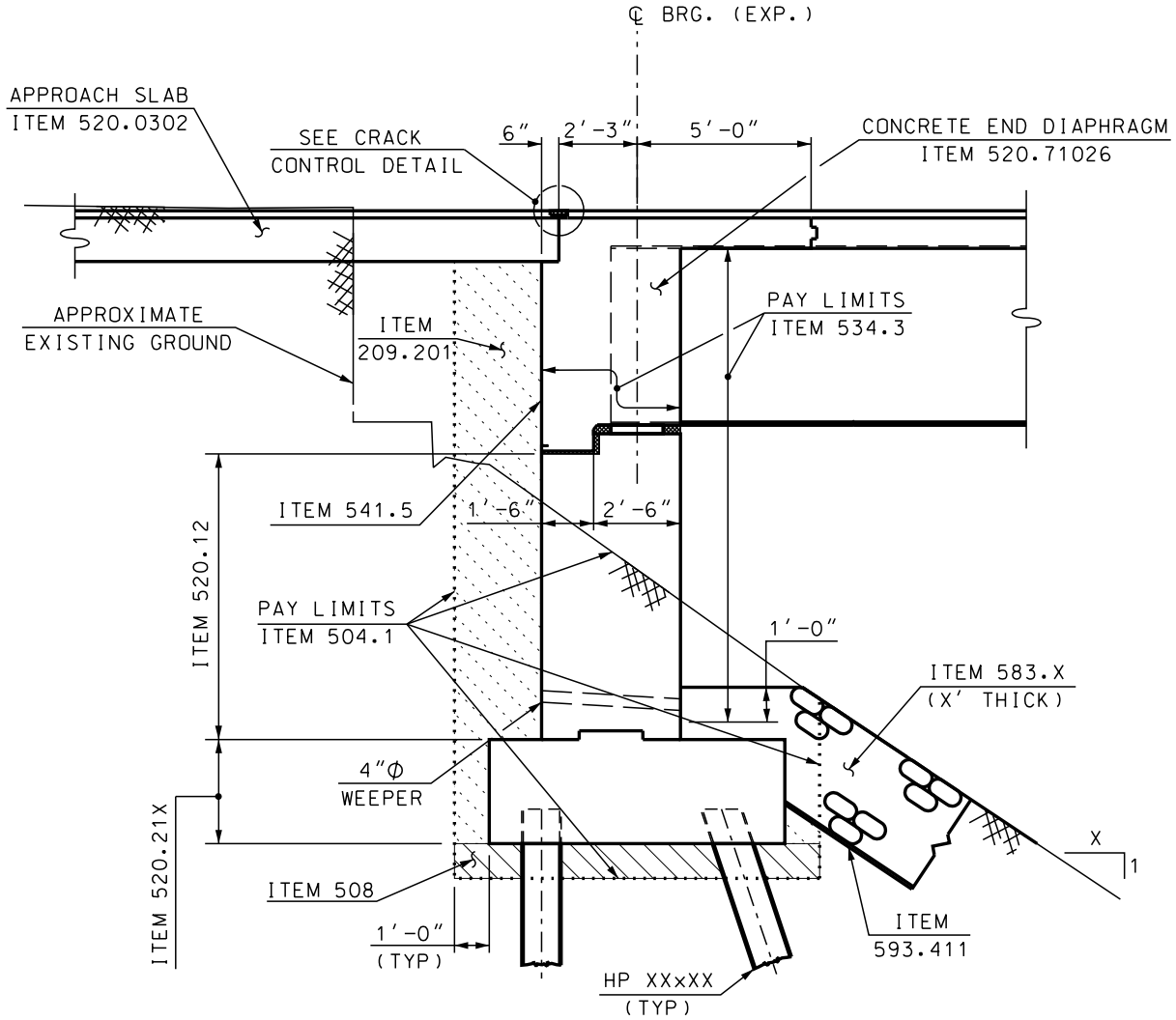

TYPICAL SEMI-INTEGRAL ABUTMENT SECTION

MODIFY TO FIT PROJECT

NEW HAMPSHIRE DEPARTMENT OF TRANSPORTATION

BUREAU OF BRIDGE DESIGN

DESCRIPTION: SUBSTRUCTURE DETAILS - TYPICAL ABUTMENT SECTION ON MSE WALL

DATE REVISED: 2/8/2016

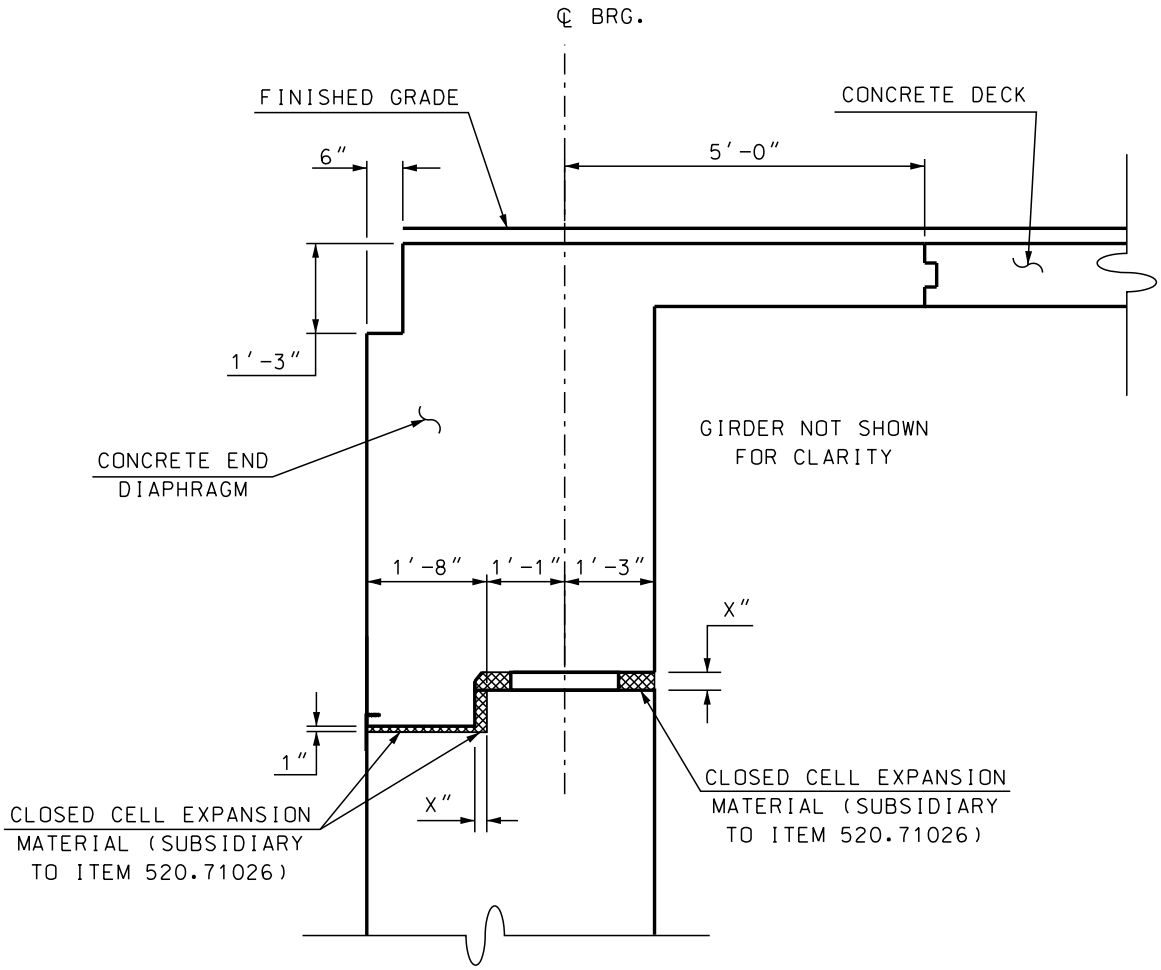

TYPICAL SEMI-INTEGRAL DIAPHRAGM SECTION

MODIFY TO FIT PROJECT