SDR PROCESSED	CLB/WED	DATE	4/2014
NEW DESIGN	CLB/CAC	DATE	6/2014
SHEET CHECKED	CAC	DATE	6/16/2014
AS BUILT DETAILS		DATE	

REVISIONS AFTER PROPOSAL

NUMBER	DATE	STATION	STATION	DESCRIPTION

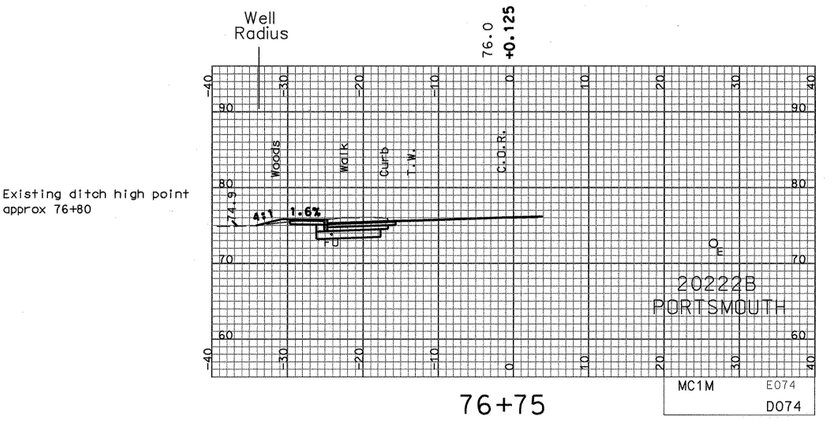

76+75

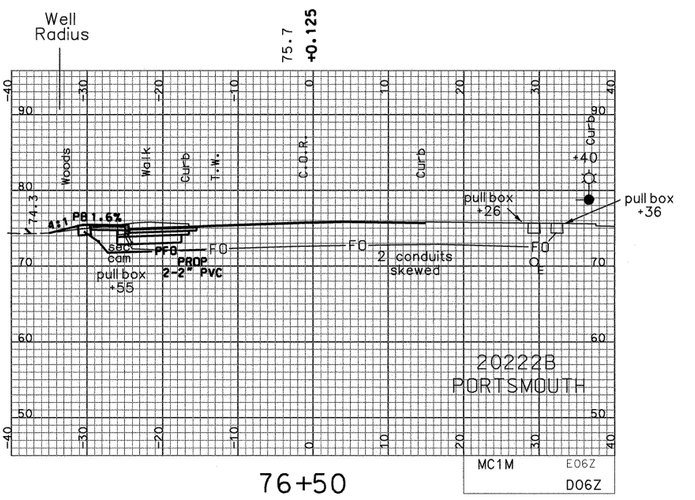

76+50

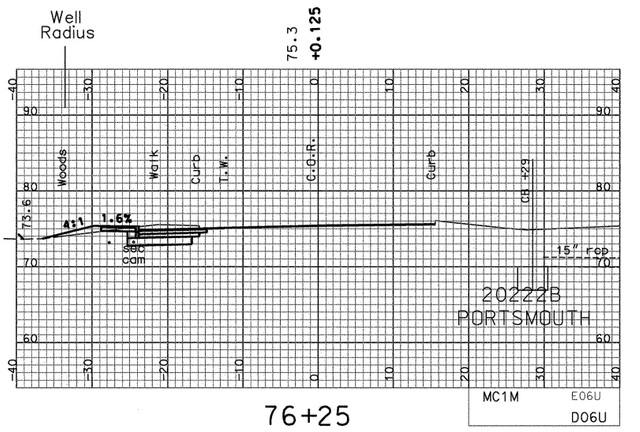

76+25

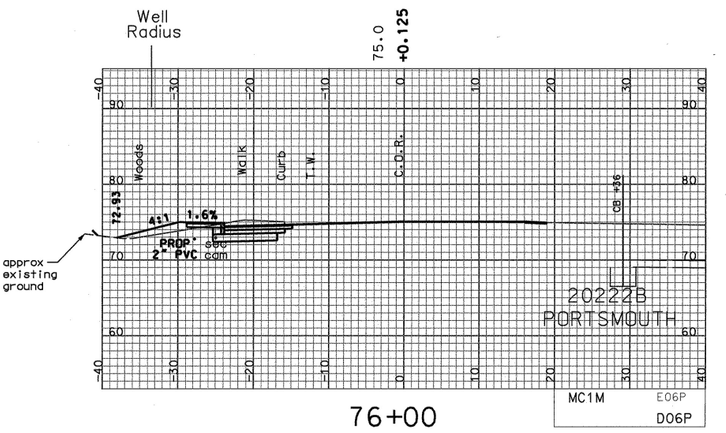

76+00

SHEET TOTALS

COMMON EXCAV.	90.64 C.Y.	ROCK EXCAV.	– C.Y.
FILL	10.32 C.Y.	MUCK EXCAV.	– C.Y.

DGN	STATE PROJECT NO.	SHEET NO.	TOTAL SHEETS
20222axs_mc1m_6550-7800	20222B	33	42

SDR PROCESSED	CLB/WED	DATE	4/2014
NEW DESIGN	CLB/CAC	DATE	6/2014
SHEET CHECKED	CAC	DATE	6/16/2014
AS BUILT DETAILS		DATE	

REVISIONS AFTER PROPOSAL

NUMBER	DATE	STATION	STATION	DESCRIPTION

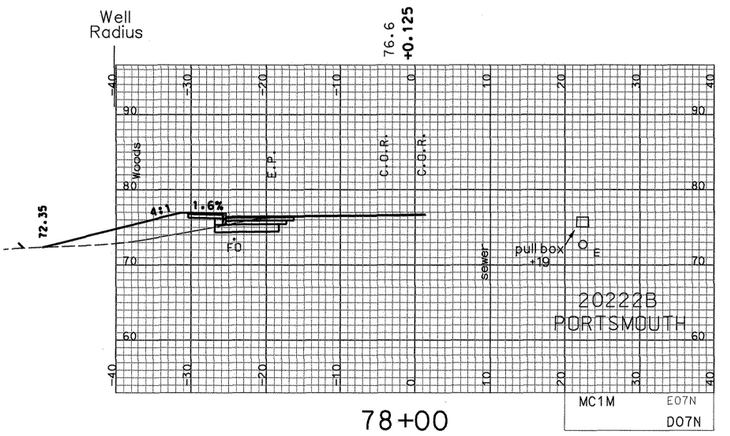

78+00

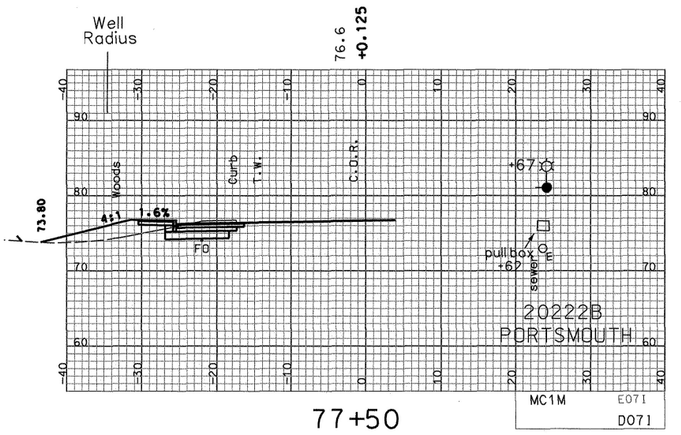

77+50

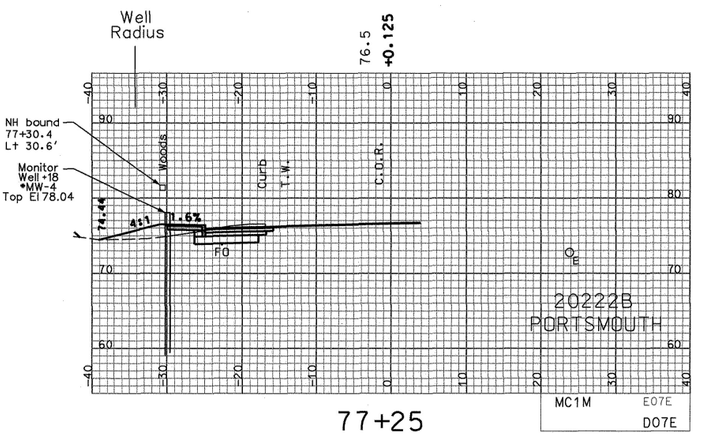

77+25

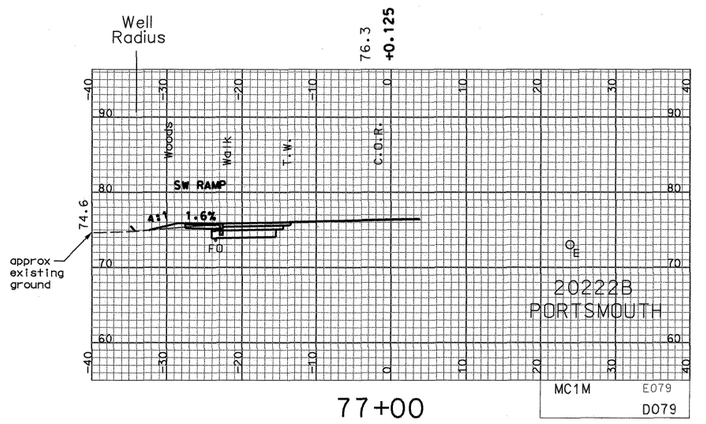

77+00

SHEET TOTALS

COMMON EXCAV.	69.10 C.Y.	ROCK EXCAV.	– C.Y.
FILL	83.12 C.Y.	MUCK EXCAV.	– C.Y.

DGN	STATE PROJECT NO.	SHEET NO.	TOTAL SHEETS
20222axs_mc1m_6550-7800	20222B	34	42

SDR PROCESSED	CLB	DATE 4/2014
NEW DESIGN	CLB	DATE 5/2014
SHEET CHECKED	CAC	DATE 6/16/14

AS BUILT DETAILS DATE

REVISIONS AFTER PROPOSAL

NUMBER	DATE	STATION	STATION	DESCRIPTION

SHEET TOTALS			
COMMON EXCAV. 68.57 C.Y.	ROCK EXCAV. — C.Y.		
FILL 1.48 C.Y.	MUCK EXCAV. — C.Y.		
DGN	STATE PROJECT NO.	SHEET NO.	TOTAL SHEETS
20222axs_mc3m	20222B	35	42

22axs_mc3m.dgn 6/16/2014 3:24:57 PM "n34cnc"

SDR PROCESSED	CLB	DATE	4/2014
NEW DESIGN	CLB	DATE	5/2014
SHEET CHECKED	CAC	DATE	6/16/14
AS BUILT DETAILS		DATE	

REVISIONS AFTER PROPOSAL

NUMBER	DATE	STATION	STATION	DESCRIPTION

71.91
+0.08

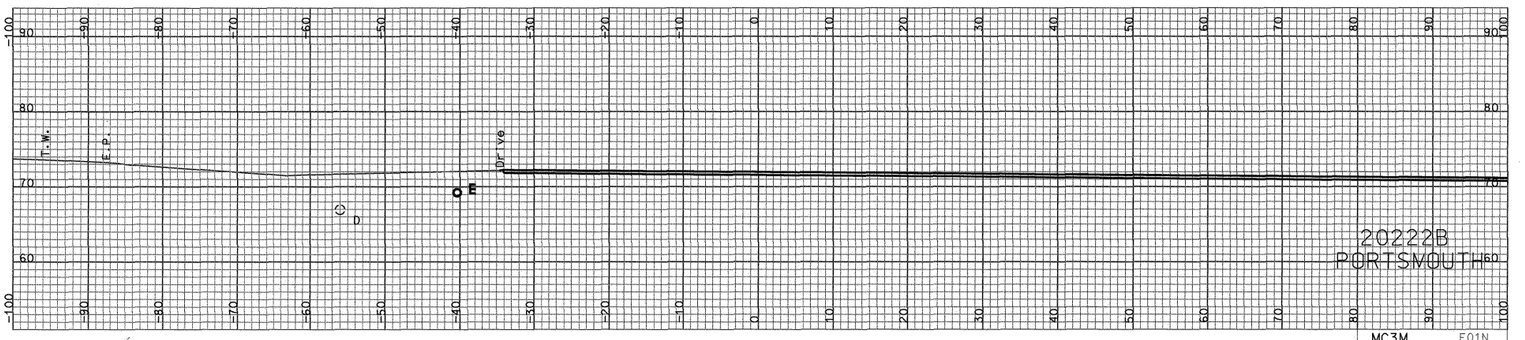

603+50

MC3M E01N
D01N

71.37
+0.08

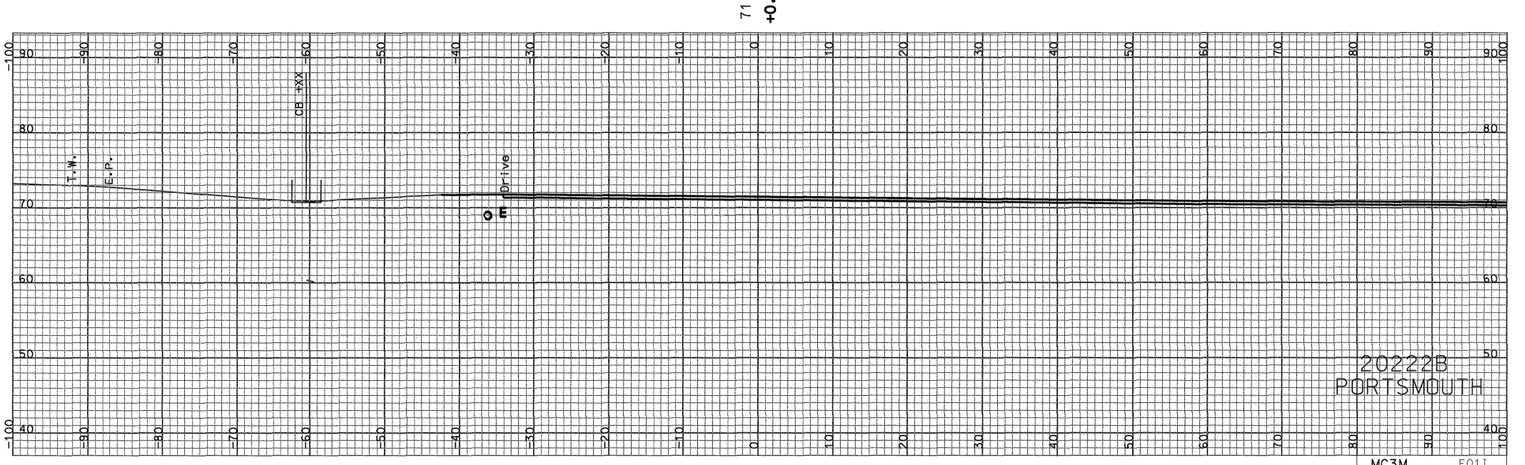

603+00

MC3M E01I
D01I

70.74
+0.08

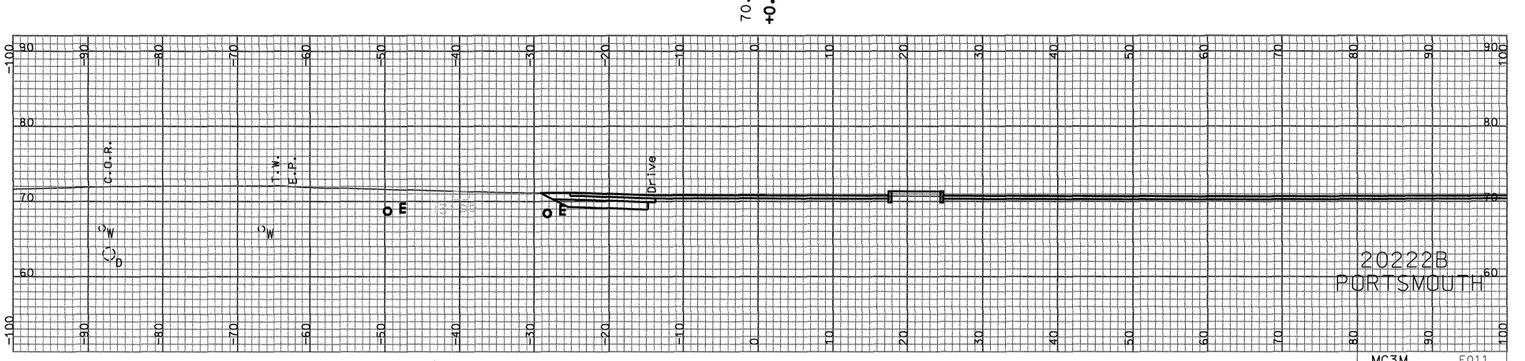

602+50

MC3M E011
D011

70.05
+0.08

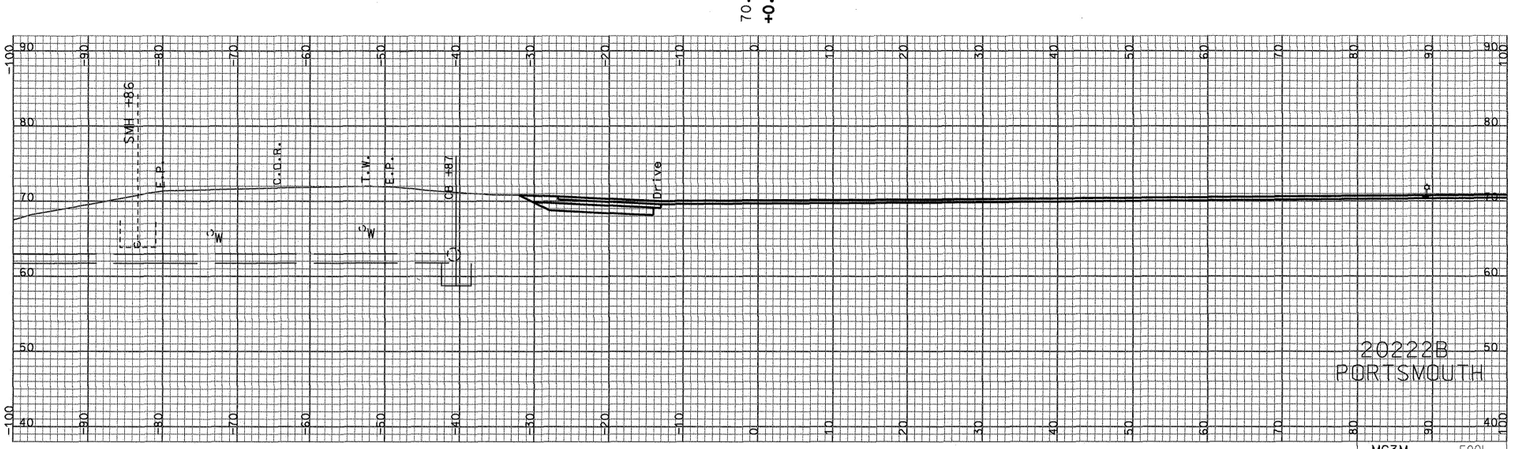

602+00

MC3M E00L
D00L

SHEET TOTALS			
COMMON EXCAV.	80.15 C.Y.	ROCK EXCAV.	– C.Y.
FILL	0.96 C.Y.	MUCK EXCAV.	– C.Y.

DGN	STATE PROJECT NO.	SHEET NO.	TOTAL SHEETS
20222axs_mc3m	20222B	36	42

2axs_mc3m.dgn 6/16/2014 3:25:03 PM "n34cnc"

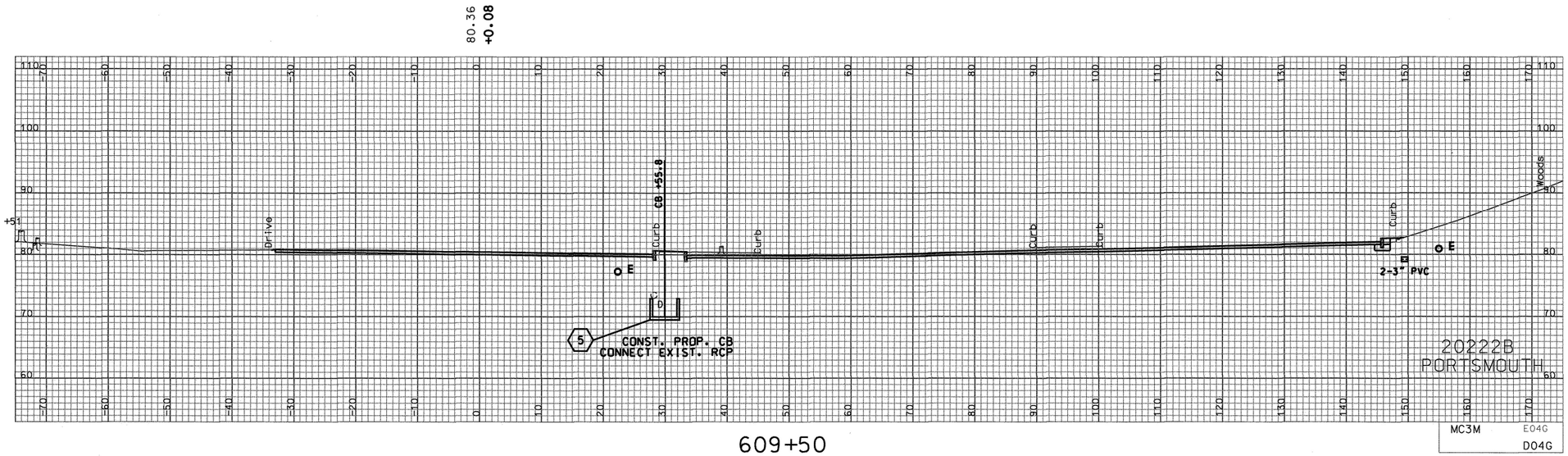

609+50

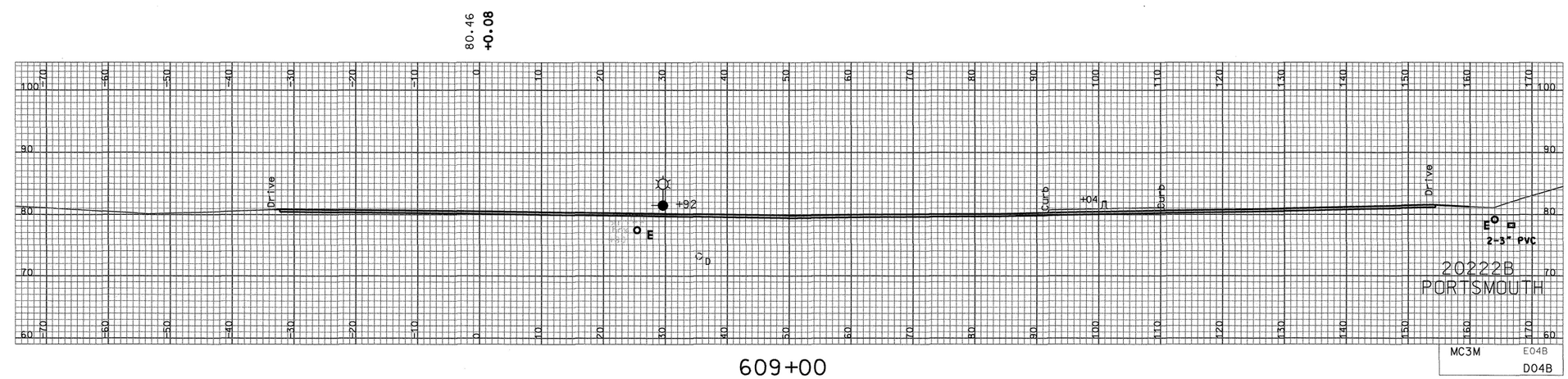

609+00

NUMBER	DATE	STATION	STATION	DESCRIPTION

REVISIONS AFTER PROPOSAL

		DATE
SDR PROCESSED	CLB	4/2014
NEW DESIGN	CLB	5/2014
SHEET CHECKED	CAC	6/16/14

AS BUILT DETAILS DATE

SHEET TOTALS

COMMON EXCAV. 7.28 C.Y. ROCK EXCAV. – C.Y.

FILL 3.02 C.Y. MUCK EXCAV. – C.Y.

DGN	STATE PROJECT NO.	SHEET NO.	TOTAL SHEETS
20222axs_mc3m	20222B	37	42

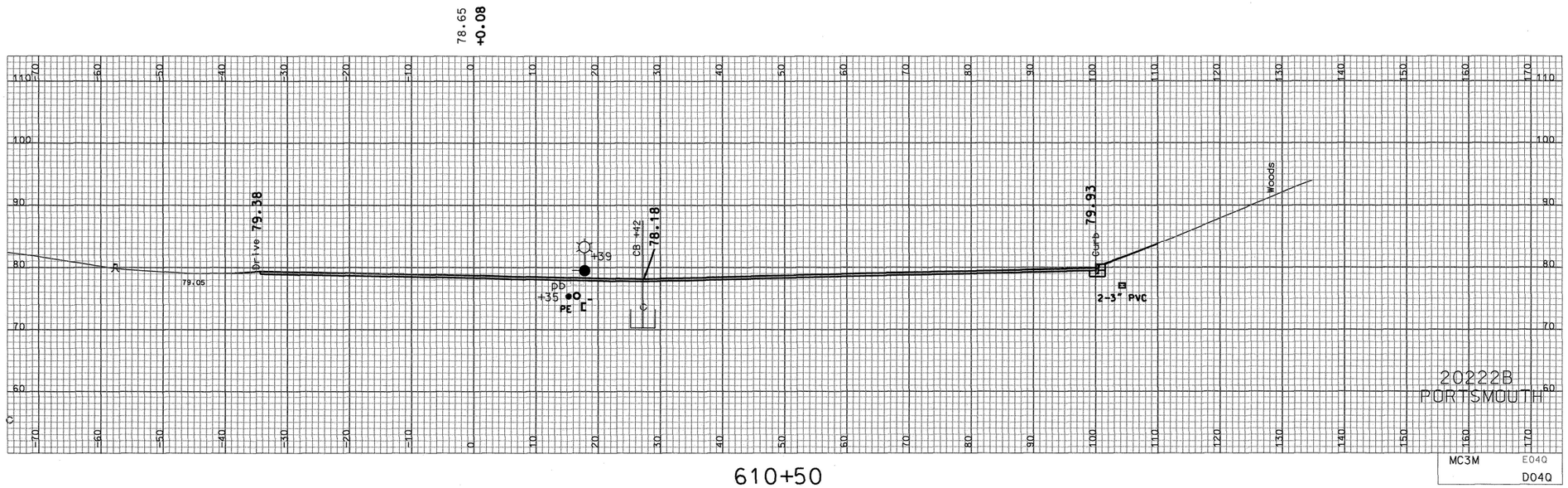

610+50

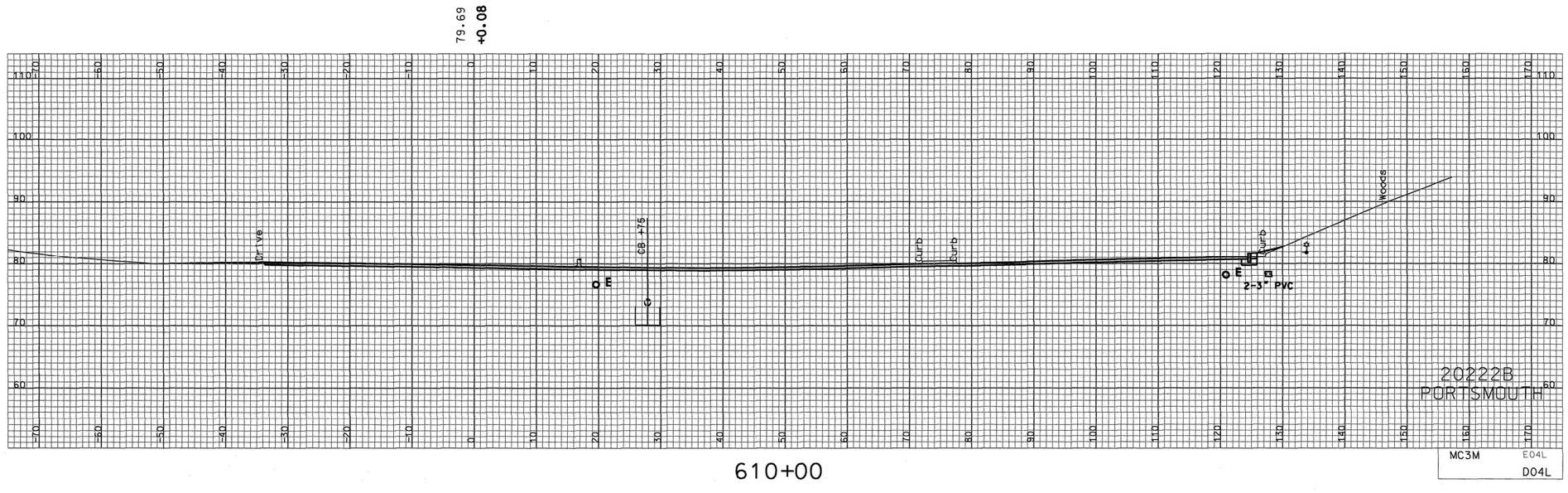

610+00

SHEET TOTALS			
COMMON EXCAV. 226.05 C.Y.		ROCK EXCAV. – C.Y.	
FILL 2.46 C.Y.		MUCK EXCAV. – C.Y.	
DGN	STATE PROJECT NO.	SHEET NO.	TOTAL SHEETS
20222axs_mc3m	20222B	38	42

NUMBER	DATE	STATION	STATION	DESCRIPTION

REVISIONS AFTER PROPOSAL

SDR PROCESSED	CLB	DATE 4/2014
NEW DESIGN	CLB	DATE 5/2014
SHEET CHECKED	CAC	DATE 6/16/14

AS BUILT DETAILS DATE

2axs_mc3m.dgn 6/16/2014 3:25:19 PM 'n34cnc'

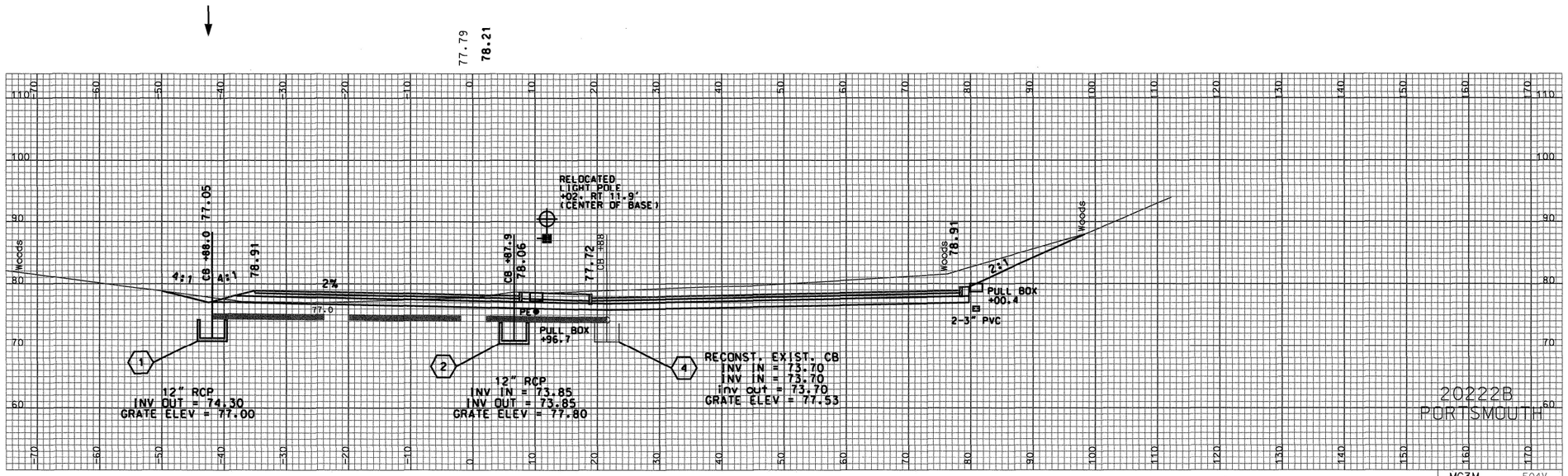

611+00

REVISIONS AFTER PROPOSAL			
NUMBER	DATE	STATION	DESCRIPTION

SDR PROCESSED	CLB	DATE 4/2014
NEW DESIGN	CLB	DATE 5/2014
SHEET CHECKED	CAC	DATE 6/16/14
AS BUILT DETAILS		DATE

SHEET TOTALS

COMMON EXCAV.	827.07 C.Y.	ROCK EXCAV.	– C.Y.
FILL	11.92 C.Y.	MUCK EXCAV.	– C.Y.

DGN	STATE PROJECT NO.	SHEET NO.	TOTAL SHEETS
20222axs_mc3m	20222B	39	42

SDR PROCESSED	CLB	DATE	4/2014
NEW DESIGN	CLB	DATE	5/2014
SHEET CHECKED	CAC	DATE	6/16/14
AS BUILT DETAILS		DATE	

REVISIONS AFTER PROPOSAL

NUMBER	DATE	STATION	STATION	DESCRIPTION

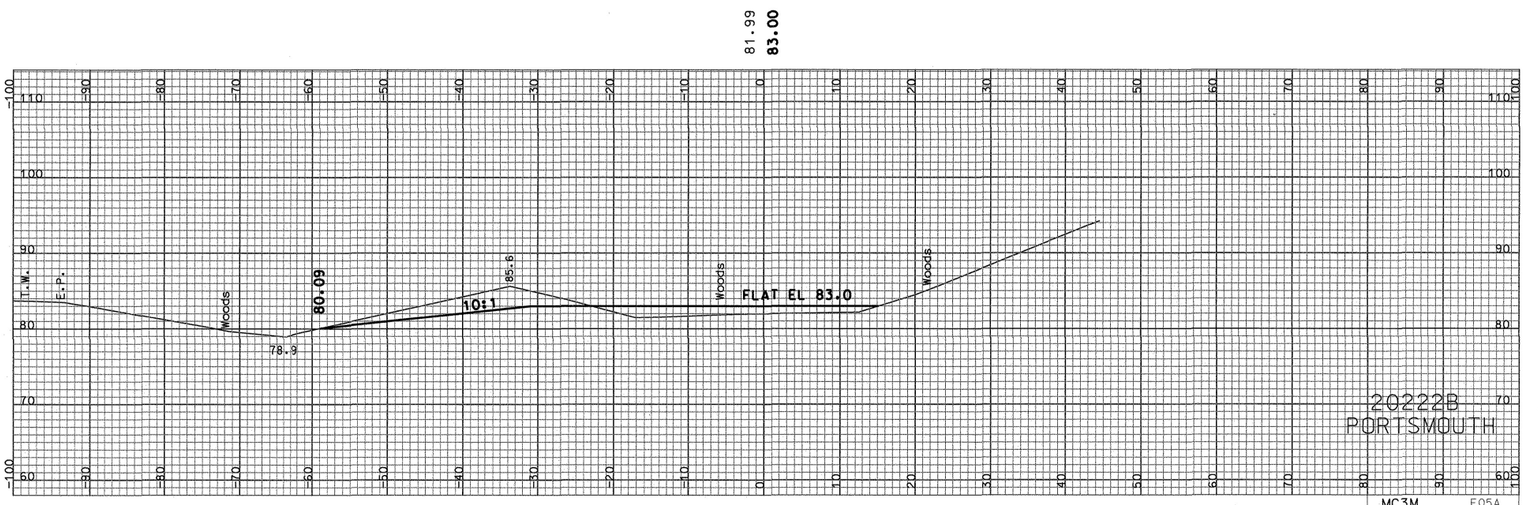

612+50

MC3M E05A
D05A

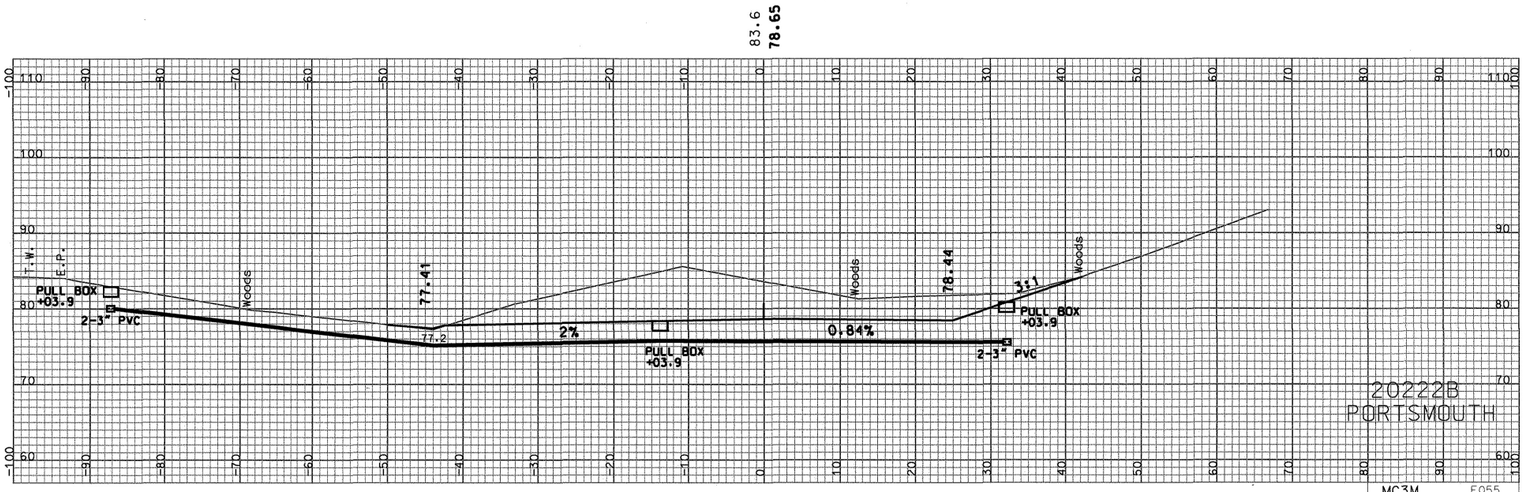

612+00

MC3M E055
D055

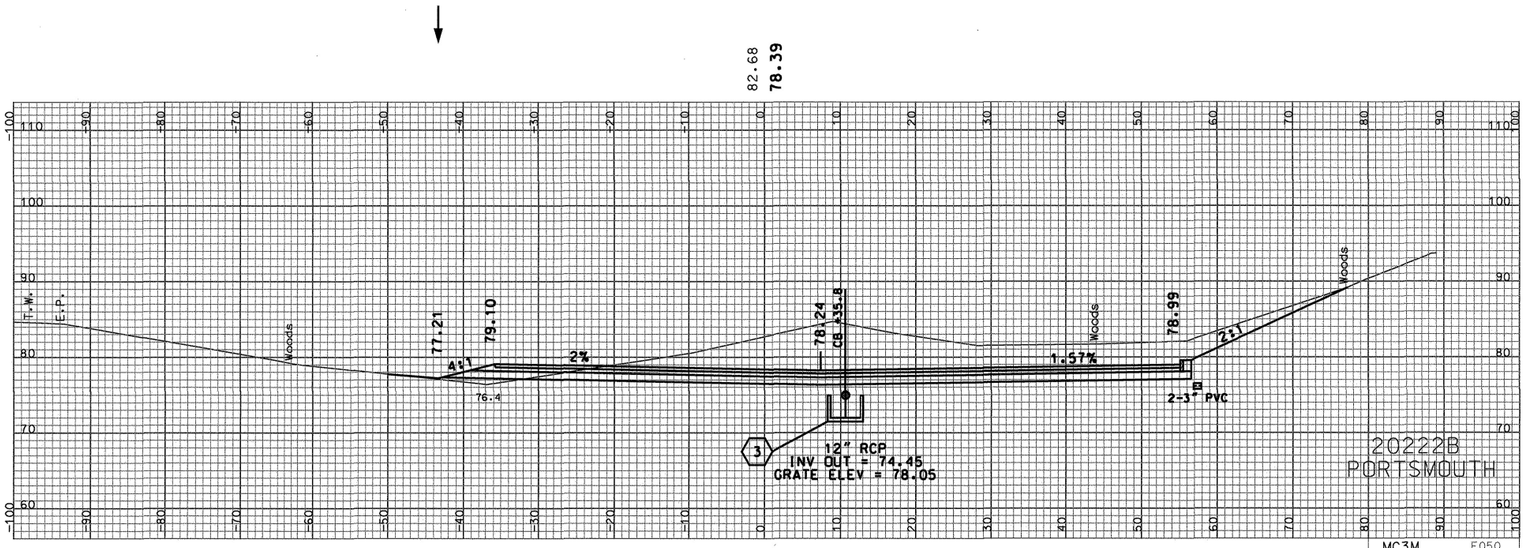

611+50

MC3M E050
D050

SHEET TOTALS

COMMON EXCAV.	1042.79 C.Y.	ROCK EXCAV.	– C.Y.
FILL	55.35 C.Y.	MUCK EXCAV.	– C.Y.

DGN	STATE PROJECT NO.	SHEET NO.	TOTAL SHEETS
20222axs_mc3m	20222B	40	42

SDR PROCESSED	CLB	DATE	4/2014
NEW DESIGN	CLB	DATE	5/2014
SHEET CHECKED	CAC	DATE	6/16/14
AS BUILT DETAILS		DATE	

REVISIONS AFTER PROPOSAL

NUMBER	DATE	STATION	STATION	DESCRIPTION

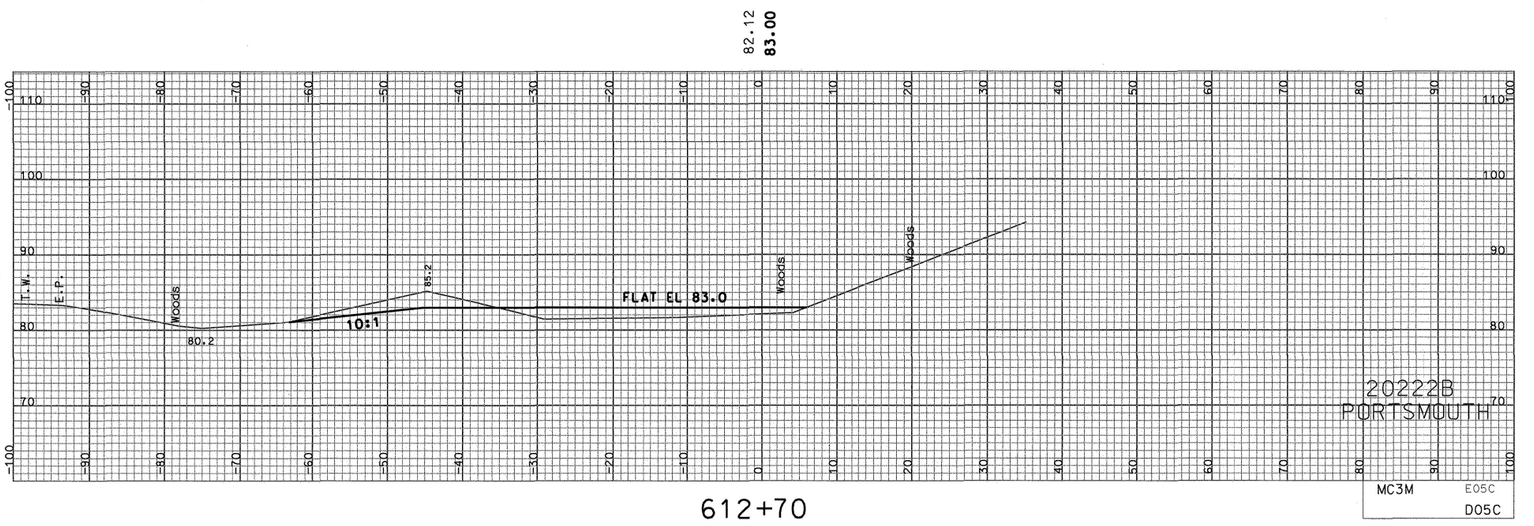

612+70

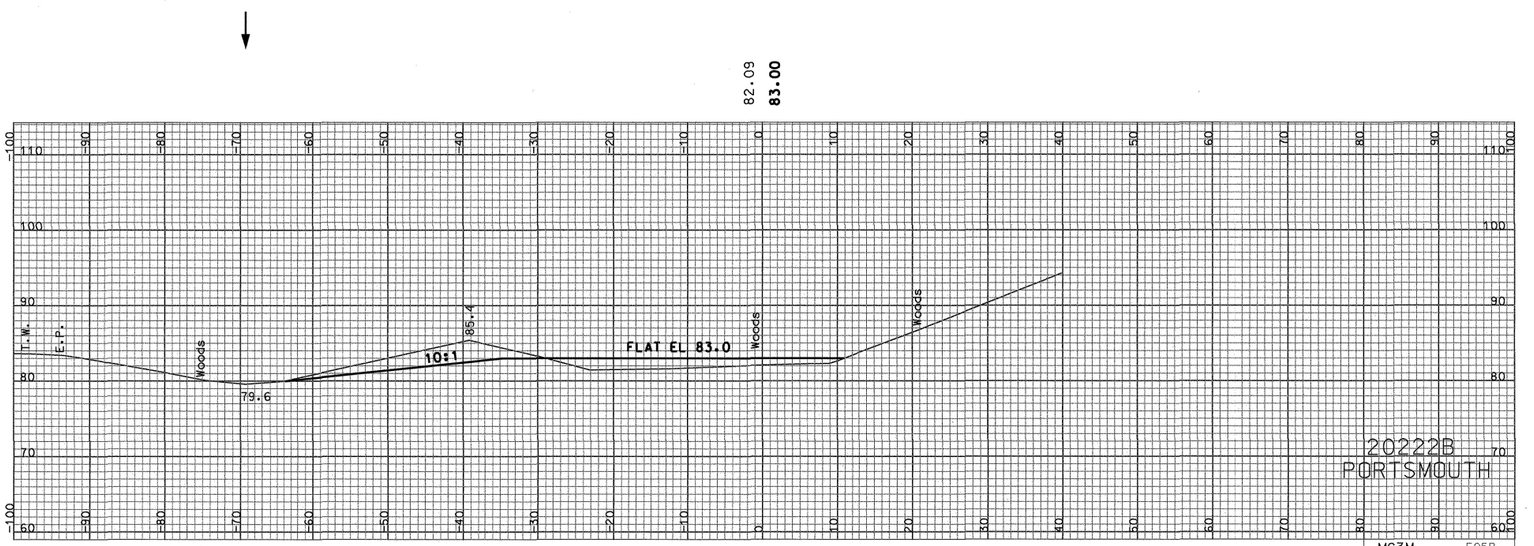

612+60

SHEET TOTALS			
COMMON EXCAV. 43.31 C.Y.		ROCK EXCAV. – C.Y.	
FILL 58.29 C.Y.		MUCK EXCAV. – C.Y.	
DGN	STATE PROJECT NO.	SHEET NO.	TOTAL SHEETS
20222axs_mc3m	20222B	41	42

SDR PROCESSED	CLB	DATE	4/2014
NEW DESIGN	CLB	DATE	5/2014
SHEET CHECKED	CAC	DATE	6/16/14
AS BUILT DETAILS		DATE	

REVISIONS AFTER PROPOSAL

NUMBER	DATE	STATION	STATION	DESCRIPTION

MATCH EXISTING AT STA 722+90 ±

82.9

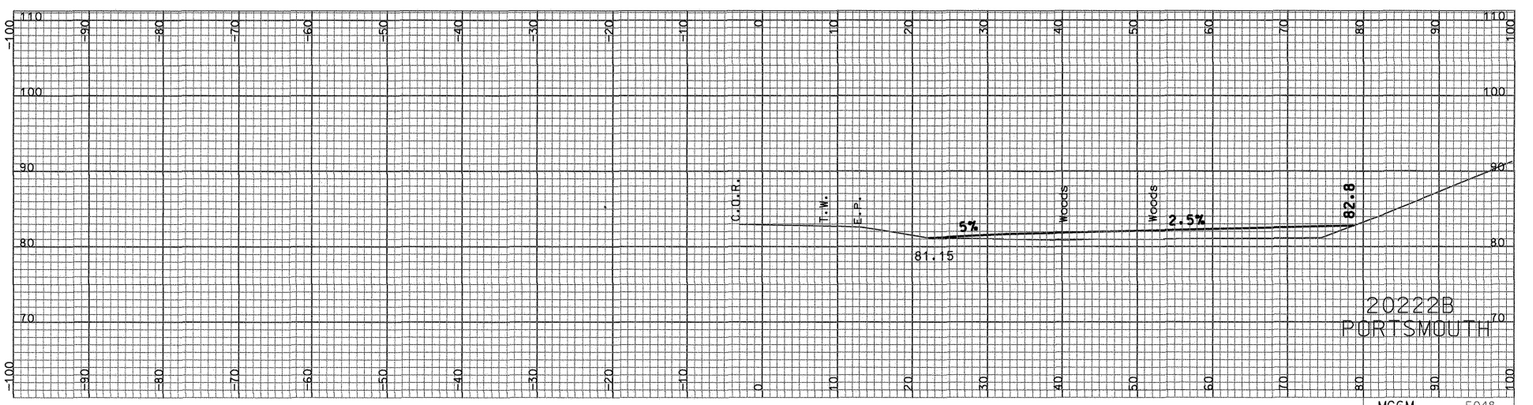

722+75 = 613+45

83.1

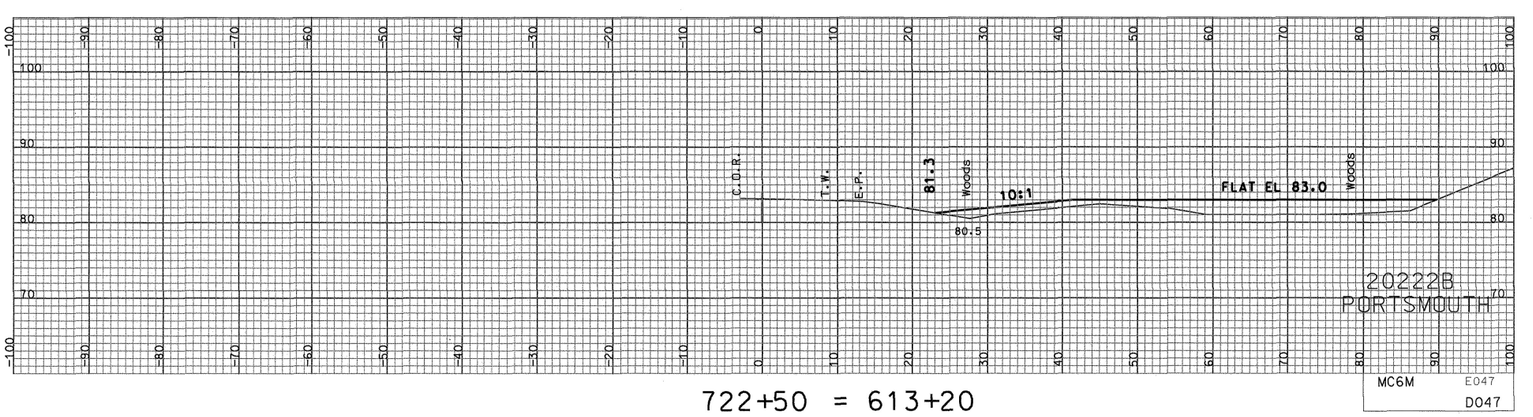

722+50 = 613+20

83.4

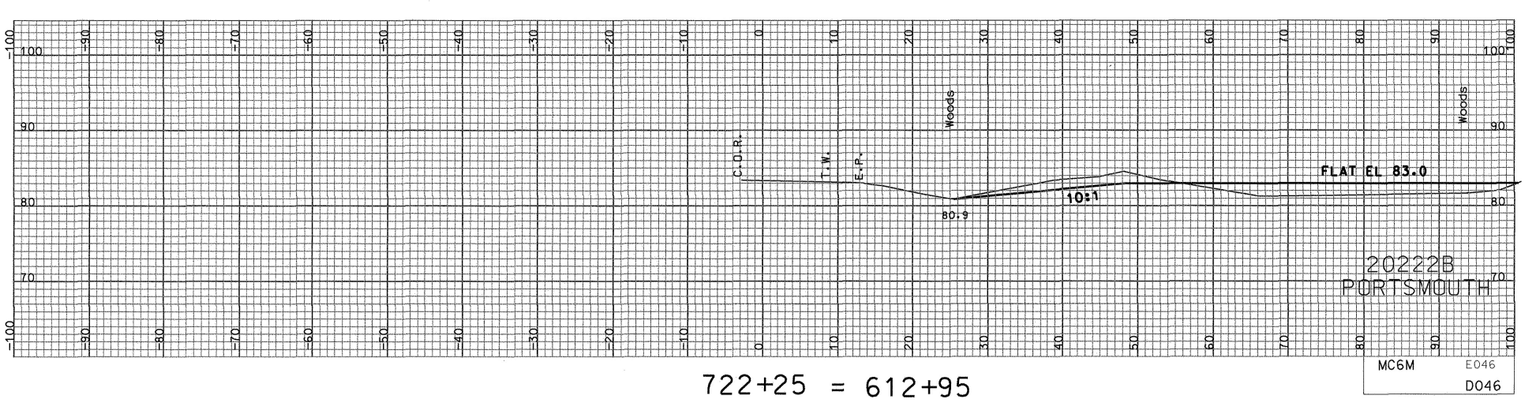

722+25 = 612+95

SHEET TOTALS

COMMON EXCAV.	13.10 C.Y.	ROCK EXCAV.	– C.Y.
FILL	143.02 C.Y.	MUCK EXCAV.	– C.Y.

DGN	STATE PROJECT NO.	SHEET NO.	TOTAL SHEETS
20222axs_mc3m	20222B	42	42

STATE OF NEW HAMPSHIRE
DEPARTMENT OF TRANSPORTATION

CONSTRUCTION PLANS
FEDERAL AID PROJECT

X-A004(090)
N.H. PROJECT NO. 20222B

PARKING DATA

TYPICAL SPACE 9' X 18.5'
PARALLEL SPACE 8' X 22.5'
ISLE WIDTH 24'

MAIN LOT (EXISTING)	510 SPACES
MAIN LOT (PROPOSED)	548 SPACES
AUX LOT (EXISTING)	485 SPACES
AUX LOT (PROPOSED)	657 SPACES
NET GAIN	210 SPACES

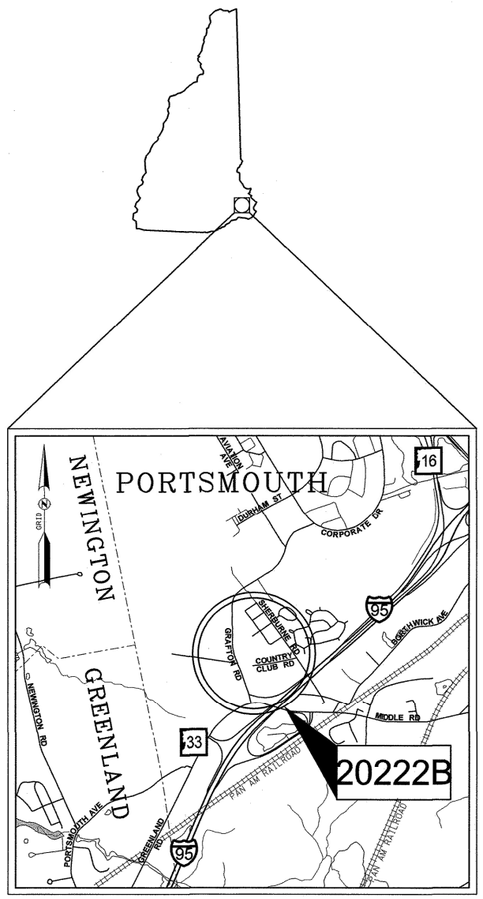

LOCATION MAP

1/2 1/4 0 1/2 1 mi.

GRAPHIC SCALE

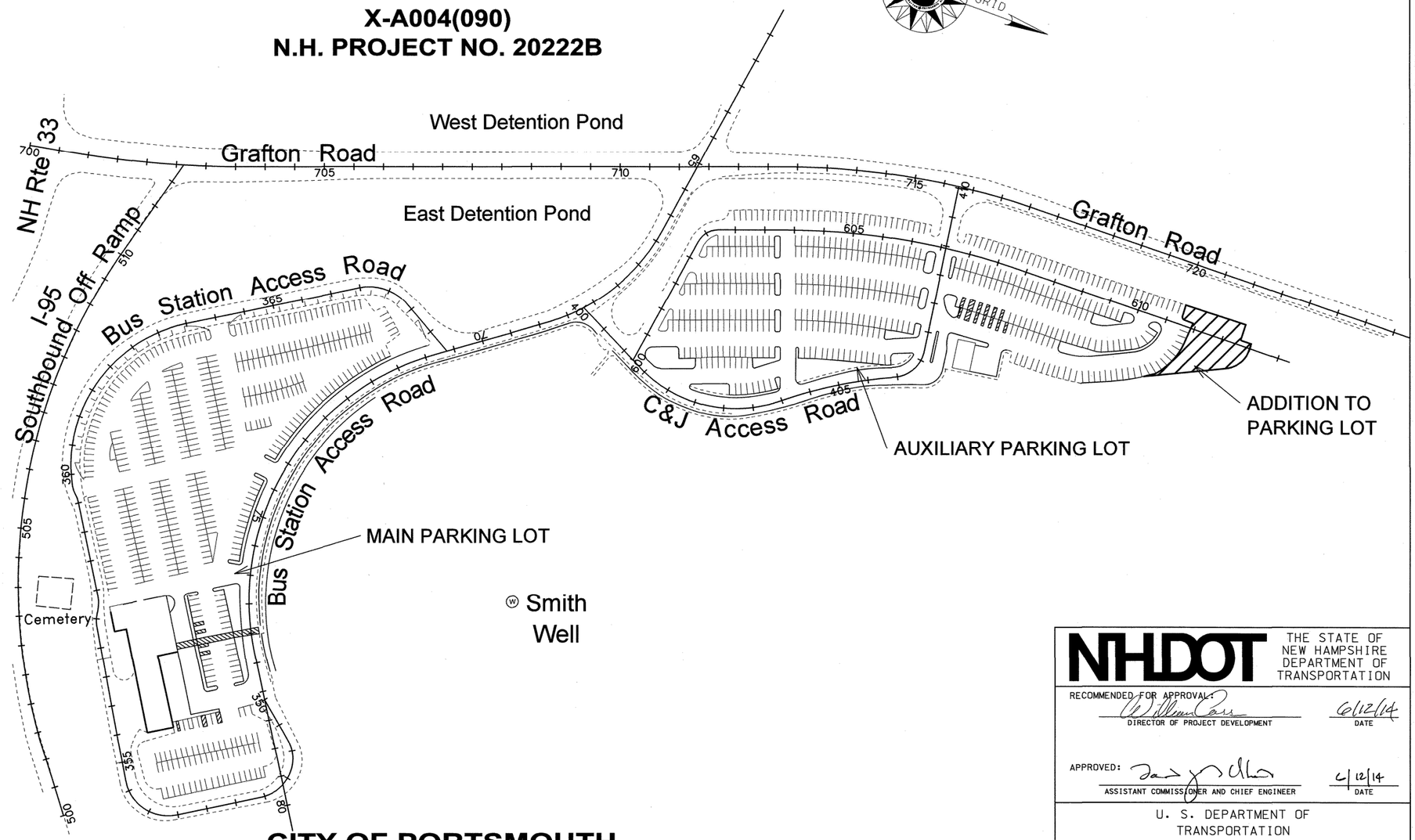

CITY OF PORTSMOUTH
COUNTY OF ROCKINGHAM

SCALE: 1" = 50'

DRAWN BY c l b DATE 5/2014
CHECKED BY CGC DATE 6/9/14

NHDOT THE STATE OF NEW HAMPSHIRE DEPARTMENT OF TRANSPORTATION

RECOMMENDED FOR APPROVAL: William Cass 6/12/14
DIRECTOR OF PROJECT DEVELOPMENT DATE

APPROVED: 6/12/14
ASSISTANT COMMISSIONER AND CHIEF ENGINEER DATE

U. S. DEPARTMENT OF TRANSPORTATION
FEDERAL HIGHWAY ADMINISTRATION

APPROVED:
DIVISION ADMINISTRATOR DATE

FEDERAL PROJECT NO.	STATE PROJECT NO.	SHEET NO.	TOTAL SHEETS
X-A004(090)	20222B	1	42

INDEX OF SHEETS

SHEET NO.	DESCRIPTION
1	TITLE PAGE
2	INDEX OF SHEETS AND GENERAL NOTES
3,4	STANDARD SYMBOLS
5	TYPICAL SECTIONS OF IMPROVEMENT
6-8	SUMMARY OF QUANTITIES
	SPECIAL USE PLANS
9	AIRPORT ZONES
10	CURB RAMP DETAILS
11	DRAINAGE DETAILS
12	FIBER OPTIC DETAILS
13	DRAINAGE NOTES
14	SIGN TEXT LAYOUT
	ROADWAY PLANS
15-17	GENERAL PLANS
18,19	CURBING AND PAVEMENT LAYOUT
20,21	LIGHTING AND CONDUIT
22,23	SIGNING AND MARKING
24	LANDSCAPING AND CONTOUR PLAN
25	TRAFFIC CONTROL PLAN
	CROSS SECTIONS
26-34	MAIN LOT
35-42	AUXILIARY LOT

GENERAL NOTES

1. FOR STANDARD PLANS, SEE "STANDARD PLANS FOR ROAD CONSTRUCTION" DATED 2010 (A BOUND BOOK).
2. HIGH TENSION OVERHEAD TRANSMISSION LINES ARE LOCATED THROUGHOUT THE PROJECT WITH CROSSINGS AT VARIOUS LOCATIONS AND RUNNING ALONG THE ROAD THROUGHOUT THE PROJECT EVEN ON REGULAR POLES. THE CONTRACTOR IS ADVISED THAT EXTREME CAUTION WILL BE REQUIRED IN THE OPERATION OF EQUIPMENT, ESPECIALLY CRANES AND PILE DRIVING EQUIPMENT.
3. MODIFY SUPERELEVATION ON EXISTING CURVES BY THE USE OF A LEVELING COURSE TO THE RATES INDICATED ON THE PLANS OR AS ORDERED.
4. EXISTING DELINEATORS AND WITNESS MARKERS THAT ARE REMOVED AND DETERMINED BY THE ENGINEER TO BE IN ACCEPTABLE CONDITION SHALL BE RESET (SUBSIDIARY). ADDITIONAL DELINEATORS AND WITNESS MARKERS ORDERED WILL BE PAID UNDER THE APPROPRIATE ITEMS OF THE CONTRACT.
5. NO EXISTING MONUMENTS, BOUNDS, OR BENCHMARKS SHALL BE DISTURBED WITHOUT FIRST MAKING PROVISIONS FOR RELOCATION.
6. PERFORM ALL WORK WITHIN THE EXISTING RIGHT-OF-WAY, UNLESS OTHERWISE SHOWN ON THE PLANS OR AS ORDERED BY THE ENGINEER.
7. REMOVE UNPROTECTED PROJECT MARKERS (SUBSIDIARY).
8. SURVEY DATA FOR THIS PROJECT WAS COLLECTED BY SDR AND THE FIELD NOTES CAN BE FOUND IN THE FIELD BOOK(S) 13410 & 13416. COORDINATES ARE NEW HAMPSHIRE STATE PLANE COORDINATES OF NAD83, 1986 ADJUSTMENT AND THE BEARINGS ARE GRID. ELEVATIONS ARE REFERENCED TO NGVD 1929.
9. QUANTITIES FOR EMBANKMENT AND EXCAVATION FOR SLOPE ROUNDINGS AS SHOWN ON THE TYPICALS HAVE NOT BEEN CALCULATED AND ARE NOT INCLUDED IN THE QUANTITY SUMMARIES, AND ARE CONSIDERED SUBSIDIARY TO THE APPROPRIATE 203 ITEMS.

THE FOLLOWING GENERAL NOTES WILL BE USED ON THIS PROJECT:

1			4	5	6		8	9			

REVISIONS AFTER PROPOSAL

NUMBER	DATE	STATION	STATION	DESCRIPTION

SDR PROCESSED DATE
NEW DESIGN CAC DATE 6/2014
SHEET CHECKED CLB DATE 6/16/14
AS BUILT DETAILS DATE

STATE OF NEW HAMPSHIRE
DEPARTMENT OF TRANSPORTATION • BUREAU OF HIGHWAY DESIGN

INDEX OF SHEETS AND GENERAL NOTES

DGN	STATE PROJECT NO.	SHEET NO.	TOTAL SHEETS
20222A index	20222B	2	42

GENERAL

	PROPOSED ROADWAY	existing roadway	(pavement removed outside slope lines)
EDGE OF PAVEMENT			
TRAVELED WAY			

DRIVEWAYS — (label surface type)

BUILDINGS — (building to be removed) — (label house or type of building)

FOUNDATION — (label type)

LEACH FIELD — leach field

BRIDGE CROSSINGS — STREAM — OVERPASS

STEPS AND WALK — (label type)

INTERMITTENT WATER COURSE

SHORE LINE — river/stream — pond — (label name of water body)

POTENTIAL WET AREA SYMBOL

BRUSH OR WOODS LINE

TREES (PLANS) — (deciduous) (coniferous) (stump)

TREE OR STUMP (CROSS-SECTIONS) — (show station, circumference in feet & type)

HEDGE — (label type)

MONITORING WELL — mon W

WELL — W

FLAG POLE — fp

ORIGINAL GROUND (TYPICALS)

ROCK OUTCROP

ROCK LINE (TYPICALS & SECTIONS ONLY)

	existing	PROPOSED
GUARDRAIL (LABEL TYPE)	bgr / cgr	BGR / MEDIAN CGR
JERSEY BARRIER		
CURB (LABEL TYPE)		
STONE WALL		
RETAINING WALL (LABEL TYPE)		(points toward retained ground)
FENCE (LABEL TYPE)		

SIGNS — (single post) — (double post)

GAS PUMP — gp

FUEL TANK (ABOVE GROUND) — ft (label size & type)

STORAGE TANK FILLER CAP — fc

SEPTIC TANK — S

GRAVE — gr

MAILBOX — mb

VENT PIPE — vp

SATELLITE DISH ANTENNA — da

PHONE — ph

GROUND LIGHT/LAMP POST — gl lp

BORING LOCATION — B

TEST PIT — TP

INTERSTATE NUMBERED HIGHWAY — 293

UNITED STATES NUMBERED HIGHWAY — 3

STATE NUMBERED HIGHWAY — 102

WETLANDS

WETLAND DESIGNATION AND TYPE — 2 PUB2E

DELINEATED WETLAND — DW

PRIME WETLAND — PWET

ORDINARY HIGH WATER — OHW

TOP OF BANK — TOB

TOP OF BANK & ORDINARY HIGH WATER — TOBOHW

MEAN HIGH TIDE — MHT

TIDAL BUFFER ZONE — TBZ

HIGHEST OBSERVABLE TIDAL LINE — HOTL

SPECIAL AQUATIC SITE — SAS

VERNAL POOL — VP

INVASIVE SPECIES LABEL — I.S. I — I.S. II

INVASIVE SPECIES — INV

WATER FRONT BUFFER — WB50

NATURAL WOODLAND BUFFER — NWB150

PROTECTED SHORE LAND — PS250

FLOODPLAIN / FLOODWAY

500 YEAR FLOODPLAIN BOUNDARY — FP500

100 YEAR FLOODPLAIN BOUNDARY — FP100

FLOODWAY — FW

ENGINEERING

CONSTRUCTION BASELINE — 30 31 32

PC, PT, POT (ON CONST BASELINE)

PI (IN CONSTRUCTION BASELINES)

INTERSECTION OR EQUATION OF TWO LINES

ORIGINAL GROUND LINE (PROFILES AND CROSS-SECTIONS)

PROFILE GRADE LINE (PROFILES AND CROSS-SECTIONS)

CLEARING LINE — SLOPE LINE

SLOPE LINE (FILL)

SLOPE LINE (CUT)

PROFILES AND CROSS SECTIONS:
ORIGINAL GROUND ELEVATION (LEFT) — 72.5
FINISHED GRADE ELEVATION (RIGHT) — 79.14

SHEET 1 OF 2

STATE OF NEW HAMPSHIRE

DEPARTMENT OF TRANSPORTATION ∘ BUREAU OF HIGHWAY DESIGN

STANDARD SYMBOLS

REVISION DATE	DGN	STATE PROJECT NO.	SHEET NO.	TOTAL SHEETS
3-15-13	20222A stdsymb	20222B	3	42

stdsymb dgn 6/16/2014 9:11:06 AM "n34clb"

DRAINAGE

	(existing)	(PROPOSED)
MANHOLE	d	
CATCH BASIN	cb	
DROP INLET	di	

DRAINAGE PIPE (existing)		(label size & type)
DRAINAGE PIPE (PROPOSED)		
UNDERDRAIN (existing) W/ FLUSHING BASIN	fb	(label size & type)
UNDERDRAIN (PROPOSED) W/ FLUSHING BASIN		
HEADER (existing & PROPOSED)		(with stone outlet protection)
END SECTION (existing & PROPOSED)		METAL or PLASTIC RCP
OPEN DITCH (PROPOSED)		
EROSION CONTROL/ STONE SLOPE PROTECTION		

show direction of flow

BOUNDARIES / RIGHT-OF-WAY

RIGHT-OF-WAY LINE		(label type)
RR RIGHT-OF-WAY LINE		
PROPERTY LINE	PL	
PROPERTY LINE (COMMON OWNER)	Z	
TOWN LINE	BOW / CONCORD	
COUNTY LINE	COOS / GRAFTON	
STATE LINE	MAINE / NEW HAMPSHIRE	
NATIONAL FOREST		
LCHIP CONSERVATION EASEMENT		
BENCH MARK / SURVEY DISK		
BOUND	bnd	(PROPOSED)
STATE LINE/ TOWN LINE MONUMENT	S/L	T/L
NHDOT PROJECT MARKER		
IRON PIPE OR PIN	ip	
DRILL HOLE IN ROCK	dh	
TAX MAP AND LOT NUMBER	156 / 14 1642/341 6.80 Ac.±	
PROPERTY PARCEL NUMBER	12	
HISTORIC PROPERTY	H	

UTILITIES

	existing	PROPOSED
TELEPHONE POLE		
POWER POLE		
JOINT OCCUPANCY		
MISCELLANEOUS/UNKNOWN POLE		
GUY POLE OR PUSH BRACE		
LIGHT POLE		
LIGHT ON POWER POLE		
LIGHT ON JOINT POLE		

(plot point at face not center of symbol)

POLE STATUS:
REMOVE, LEAVE, PROPOSED, OR TEMPORARY AS APPLICABLE e.g.:

R L P+04 25.0' T+04 25.0'

RAILROAD	(label ownership)	
RAILROAD SIGN		
RAILROAD SIGNAL		
UTILITY JUNCTION BOX	jb	JB
OVERHEAD ELECTRIC	OE	OE
UNDERGROUND UTILITIES		
WATER (on existing lines label size, type and note if abandoned)	W	PW
SEWER	S	PS
TELEPHONE	T	PT
ELECTRIC	E	PE
GAS	G	PG
LIGHTING	L	PL
INTELLIGENT TRANSPORTATION SYSTEM	ITS	PITS
FIBER OPTIC	FO	PFO
WATER SHUT OFF	WSO	WSO
GAS SHUT OFF	GSO	GSO
HYDRANT	hyd	HYD
MANHOLES		
SEWER	S	MHS
TELEPHONE	T	MHT
ELECTRICAL	e	MHE
GAS	g	MHG
UNKNOWN	U	

TRAFFIC SIGNALS / ITS

	existing	PROPOSED
MAST ARM (existing)		30' MA (NOTE ANGLE FROM ℄)
OPTICOM RECEIVER		
OPTICOM STROBE		
TRAFFIC SIGNAL		
PEDESTAL WITH PEDESTRIAN SIGNAL HEADS AND PUSH BUTTON UNIT		
SIGNAL CONDUIT	C	PC
CONTROLLER CABINET	cc	CC
METER PEDESTAL	mp	MP
PULL BOX	pb	PB
LOOP DETECTOR (QUADRUPOLE)		(label size)
LOOP DETECTOR (RECTANGULAR)		(label size)
CAMERA POLE (CCTV)		
FIBER OPTIC DELINEATOR	fod	FOD
FIBER OPTIC SPLICE VAULT	SV	SVF
ITS EQUIPMENT CABINET	its	ITS
VARIABLE SPEED LIMIT SIGN		
DYNAMIC MESSAGE SIGN		
ROAD AND WEATHER INFO SYSTEM		

CONSTRUCTION NOTES

CURB MARK NUMBER - BITUMINOUS	B-1
CURB MARK NUMBER - GRANITE	G-1
CLEARING AND GRUBBING AREA	A
DRAINAGE NOTE	1
EROSION CONTROL NOTE	A
FENCING NOTE	A
GUARDRAIL NOTE	1
ITS NOTE	1
LIGHTING NOTE	A
TRAFFIC SIGNAL NOTE	1

SHEET 2 OF 2

STATE OF NEW HAMPSHIRE
DEPARTMENT OF TRANSPORTATION • BUREAU OF HIGHWAY DESIGN

STANDARD SYMBOLS

REVISION DATE	DGN	STATE PROJECT NO.	SHEET NO.	TOTAL SHEETS
3-15-13	20222A stdsymb	20222B	4	42

A stdsymb.dgn 6/16/2014 9:11:06 AM "n34cjb"

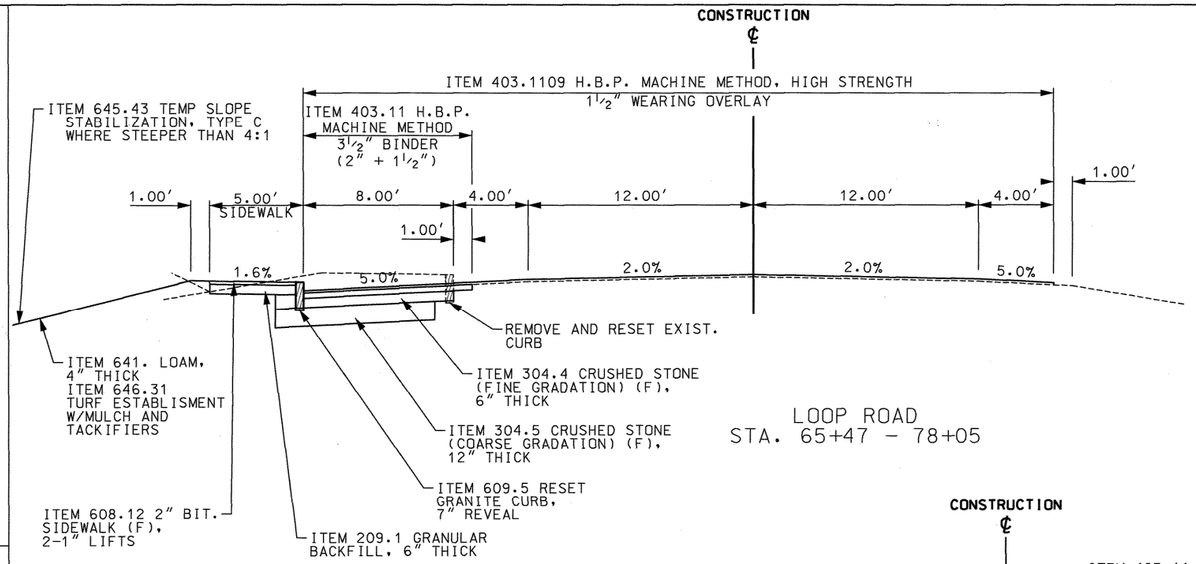

LOOP ROAD
STA. 65+47 - 78+05

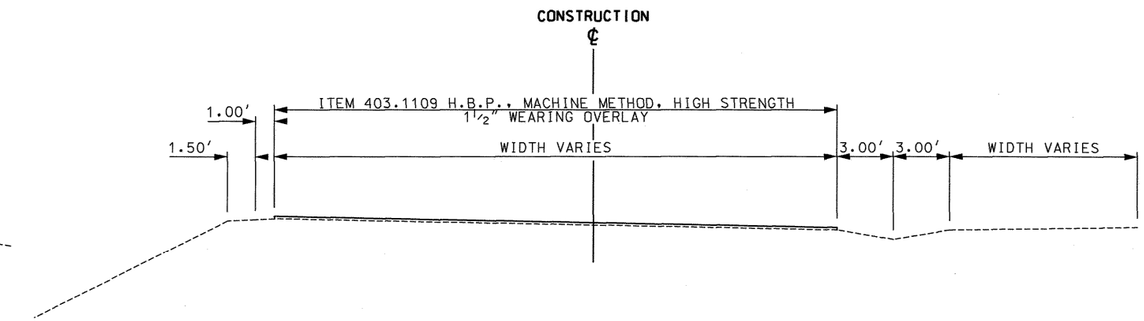

PERIMETER ROAD
STA. 350+00 - 355+00
STA. 356+81 - 368+24

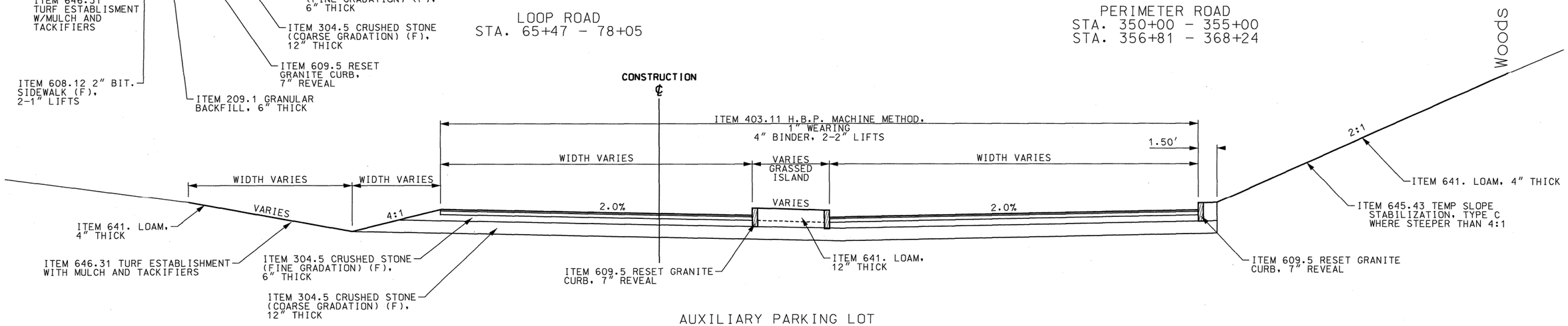

AUXILIARY PARKING LOT
EXPANSION AREA
STA. 610+50± - 612+00±

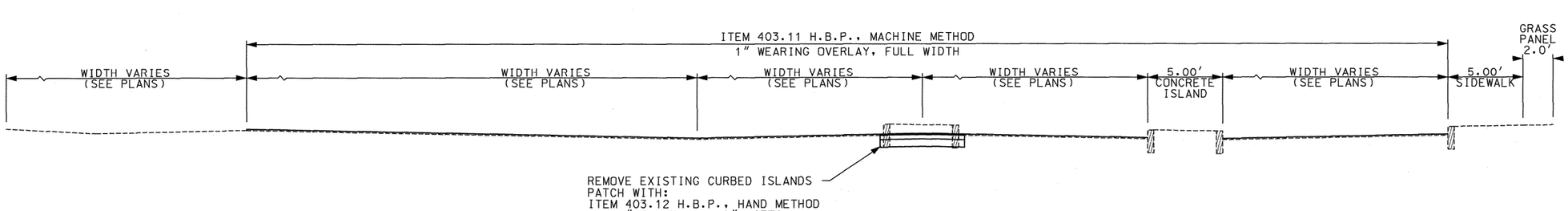

AUXILIARY PARKING
STA. 600+00 - 610+50±

AUXILIARY PARKING
STA 400+00 - 409+22

GENERAL NOTES:

1. COLD PLANE OVERLAY PAVEMENT MATCHES 3' WIDE, DEPTH EQUAL TO OVERLAY THICKNESS, OR AS DIRECTED.

NUMBER	DATE	STATION	STATION	DESCRIPTION

REVISIONS AFTER PROPOSAL

		DATE
SDR PROCESSED		
NEW DESIGN	CLB	DATE 5/2014
SHEET CHECKED	CAC	DATE 6/16/14
AS BUILT DETAILS		DATE

STATE OF NEW HAMPSHIRE

DEPARTMENT OF TRANSPORTATION ◦ BUREAU OF HIGHWAY DESIGN

TYPICAL SECTIONS

DGN	STATE PROJECT NO.	SHEET NO.	TOTAL SHEETS
20222B_Typ	20222B	5	42

28_Typ.dgn 6/16/2014 9:12:27 AM "n34c1b"

INCIDENTAL ITEMS

ITEM NO.	ITEM DESCRIPTION	UNIT	QUANTITY
201.881	INVASIVE SPECIES CONTROL, TYPE 1	SY	1,810
206.19	COMMON STRUCTURE EXCAVATION EXPLORATORY	CY	50
214.	FINE GRADING	U	1
607.9306	RESETTING CHAIN LINK FENCE WITH VINYL COATED STEEL FABRIC, 6' HIGH	LF	54
618.61	UNIFORMED OFFICERS WITH VEHICLE	$	6,000
618.7	FLAGGERS	HR	900
619.1	MAINTENANCE OF TRAFFIC	U	1
619.25	PORTABLE CHANGEABLE MESSAGE SIGN	U	2
645.7	STORM WATER POLLUTION PREVENTION PLAN	U	1
645.71	MONITORING SWPPP AND EROSION AND SEDIMENT CONTROL	HR	80
692.	MOBILIZATION	U	1
697.11	INVASIVE SPECIES CONTROL AND MANAGEMENT PLAN	U	1
699.	MISCELLANEOUS TEMPORARY EROSION AND SEDIMENT CONTROL	$	5,000
1010.15	FUEL ADJUSTMENT	$	10,000
1010.2	ASPHALT CEMENT ADJUSTMENT	$	10,000

GUARDRAIL

	ITEM NO.	606.0001	606.0142
NOTE NO.	DESCRIPTION	STEEL BEAM FOR BEAM GUARDRAIL, INCLUDING HARDWARE	6" x 8" WOOD POST ASSEMBLIES FOR BEAM GUARDRAIL POSTS
	UNIT	LF	EA
	LOCATION		
	LOOP ROAD		
1	Sta. 359+43 LT 9.7' - 360+15 LT 14.6'	75.0	6.0
	SUB-TOTAL	75.0	6.0
	ROUNDING	0.0	0.0
	TOTAL	75.0	6.0

ITEM NUMBER	LANDSCAPING	UNIT	Qty
	Description		
650.2	Landscaping	U	1
	The following are included in Item 650.2 :		
	Acer rubrum, 'October Glory', October Glory Maple, 2.5" Cal. B&B	EA	3
	Picea glauca, White Spruce, 6-7' B&B	EA	6
	Syringa reticulata, Japanese Tree Lilac, 2.5" Cal. B&B	EA	17
	Forsythia, 'Show Off', Show Off Forsythia, 2-3', #3 PC, 1 Yr. Cont. Grown	EA	21
	Hemerocallis, 'Big Time Happy', Big Time Happy Daylily, #2 PC, 1 Yr. Cont. Grown	EA	150
	Hemerocallis, 'Purple d'Oro', Purple d'Oro Daylily, #1 PC, 1 Yr. Cont. Grown	EA	150
	Hemerocallis, 'Red Hot Returns', Red Hot Returns Daylily, #2 PC, 1 Yr. Cont. Grown	EA	113
	Hemerocallis, ' Rosy Returns', Rosy Returns Daylily, #1 PC, 1 Yr. Cont. Grown	EA	105
	Mulch islands, 4" Depth (7200 sf x 4")	CY	88
	Maintenance and Fertilization of existing trees	EA	19

SIDEWALK

ITEM NO.	209.1	608.12	608.24	608.54
DESCRIPTION	GRANULAR BACKFILL	2" BITUMINOUS SIDEWALK (F)	4" CONCRETE SIDEWALK (F)	DETECTABLE WARNING DEVICES, CAST IRON
UNIT	CY	SY	SY	SY
LOCATION				
LOOP ROAD	77.7	460.3	9.6	0.9
SUB-TOTAL	77.7	460.3	9.6	0.9
ROUNDING	12.3	39.7	2.4	0.1
TOTAL	90	500	12	1

EROSION CONTROL AND SLOPE PROTECTION

ITEM NO.	641.	645.3	645.43	645.531	646.31
DESCRIPTION	LOAM	EROSION STONE	TEMPORARY SLOPE STABILIZATION, TYPE C	SILT FENCE	TURF ESTABLISHMENT WITH MULCH AND TACKIFIERS
UNIT	CY	TON		LF	SY
LOCATION					
LOOP ROAD	132.2		83.3	1000.0	1152.3
AUXILIARY PARKING LOT	578.3		475.6	1150.0	3463.8
PROJECT WIDE		60.0			
FROM ITEMS 203.1 & 203.601	-274.6				
SUB-TOTAL	435.9	60.0	558.9	2,150.0	4,616.1
ROUNDING	24.1	0.0	11.1	50.0	233.9
TOTAL	460	60	570	2,200	4,850

EARTHWORK

ITEM NO.	ITEM DESCRIPTION	UNIT	QUANTITY
	COMMON EXCAVATION IN SECTIONS	CY	3,175
	COMMON EXCAVATION NOT IN SECTIONS	CY	310
	BITUMINOUS PAVEMENT NOT IN SECTIONS	CY	0
	TOPSOIL REMOVED BENEATH FILL SECTIONS	CY	275
	DRIVE AND APPROACH EXCAVATION NOT IN SECTIONS	CY	0
	TOTAL COMMON EXCAVATION	CY	3,760
203.1	**COMMON EXCAVATION** (FOR ESTIMATE)	CY	3,880
	ROCK EXCAVATION (CONCRETE PAD)	CY	30
	ROCK EXCAVATION (FROM CONDUIT SUMMARY)	CY	2
203.2	**ROCK EXCAVATION** (FOR ESTIMATE)	CY	32
	SECTION FILL	CY	521
	TOPSOIL REPLACEMENT	CY	275
	FILL (NOT IN MAINLINE SECTIONS)	CY	0
	TOTAL FILL	CY	796
203.601	**EMBANKMENT-IN-PLACE** (FOR ESTIMATE)	CY	810

CLEARING/GRUBBING

ITEM NO.	201.101	
DESCRIPTION	CLEARING AND GRUBBING	
	DESIGNATED AREA	AREA (AC)
LOCATION		
AUXILIARY PARKING LOT	A	0.499
LOOP ROAD	B	0.002
	C	0.079
	D	0.049
PERIMETER ROAD	E	0.022
SUB-TOTAL		0.651
ROUNDING		0.05
TOTAL		0.7

SURFACING

ITEM NO.	203.1**	203.601**	304.4	304.5	403.11	403.1109	403.12	403.6	417.	628.2
DESCRIPTION	COMMON EXCAVATION	EMBANKMENT-IN-PLACE	CRUSHED STONE (FINE GRADATION) (F)	CRUSHED STONE (COARSE GRADATION) (F)	HOT BITUMINOUS PAVEMENT, MACHINE METHOD	HOT BITUMINOUS PAVEMENT, MACHINE METHOD, HIGH STRENGTH	HOT BITUMINOUS PAVEMENT, HAND METHOD	PAVEMENT JOINT ADHESIVE	COLD PLANING BITUMINOUS SURFACES	SAWED BITUMINOUS PAVEMENT
UNIT	CY	CY	CY	CY	TON	TON	TON	LF	SY	LF
LOCATION										
LOOP ROAD	866.6	401.3	185.7	300.6	250.8	464.0		1890.0	113.0	206.7
PERIMETER ROAD						418.5		2930.0	78.3	140.9
AUXILIARY PARKING LOT	2824.8	144.8	283.5	531.9	1601.4		51.5	20051.0	13.0	266.7
SUB-TOTAL	3,691.4	546.1	469.2	832.5	1,852.2	882.6	51.5	24,871.0	204.3	614.4
ROUNDING			10.8	7.5	107.8	42.4	8.5	1,129.0	45.7	15.6
TOTAL	**	**	480	840	1,960	925	60	26,000	250	630

** SUB-TOTAL TO EARTHWORK SUMMARY

PAVEMENT MARKINGS

ITEM NO.	632.0104	632.0106	632.0118	632.02	632.911	632.92
DESCRIPTION	RETROREFLECTIVE PAINT PAVEMENT MARKINGS, 4" LINE	RETROREFLECTIVE PAINT PAVEMENT MARKING, 6" LINE	RETROREFLECTIVE PAINT PAVEMENT MARKING, 18" LINE	RETROREFLECTIVE PAINT PAVEMENT MARKING, SYMBOL OR WORD	OBLITERATE PAVE MARKING LINE, 12" WIDE AND UNDER	OBLITERATE PAVE MARKING, SYMBOL OR WORD
UNIT	LF	LF	LF	SF	LF	SF
LOCATION						
LOOP ROAD	9100.0	290.0	44.0		4335.0	60.0
PERIMETER ROAD	2000.0		70.0	25.0		25.0
AUXILIARY PARKING LOT	32380.0		382.0	88.4	14999.5	252.6
SUB-TOTAL	43,480.0	290.0	496.0	113.4	19,334.5	337.6
ROUNDING	220.0	10.0	54.0	6.6	365.5	12.4
TOTAL	43,700	300	550	120	19,700	350

REVISIONS AFTER PROPOSAL

NUMBER	DATE	STATION	STATION	DESCRIPTION

SDR PROCESSED	CLB	DATE	6/2014
NEW DESIGN	CAC	DATE	6/16/14
SHEET CHECKED			
AS BUILT DETAILS		DATE	

STATE OF NEW HAMPSHIRE

DEPARTMENT OF TRANSPORTATION ∘ BUREAU OF HIGHWAY DESIGN

SUMMARY OF QUANTITIES

DGN	STATE PROJECT NO.	SHEET NO.	TOTAL SHEETS
20222A_Sum	20222B	6	42

CURBING

ITEM NO.				609.02
DESCRIPTION			STRAIGHT GRANITE CURB	CURVED GRANITE CURB
UNIT		RADIUS	LF	LF
CURB NUMBER	STATION - STATION			
A-1	STA. 600+14.5 RT 35.9 FT - 600+11.8 RT 35.1 FT	2.0		3.14
A-2	STA. 600+11.8 RT 35.1 FT - 600+11.4 RT 34.3 FT		0.88	
A-3	STA. 600+11.4 RT 34.3 FT - 600+10.6 RT 26.5 FT	10.0		8.09
A-4	STA. 600+10.6 RT 26.5 FT - 600+12.7 RT 19.9 FT		6.93	
A-5	STA. 600+12.7 RT 19.9 FT - 600+31.7 RT 10.2 FT	15.0		23.69
A-6	STA. 600+31.7 RT 10.2 FT - 600+36.6 RT 11.8 FT		5.17	
A-7	STA. 600+36.6 RT 11.8 FT - 600+45.1 RT 18.9 FT	15.0		11.29
A-8	STA. 600+45.1 RT 18.9 FT - 600+46.3 RT 21.0 FT		2.45	
A-9	STA. 600+46.3 RT 21.0 FT - 600+45.5 RT 23.7 FT	2.0		3.14
A-10	STA. 600+45.5 RT 23.7 FT - 600+31.0 RT 31.6 FT		16.50	
A-11	STA. 600+31.0 RT 31.6 FT - 600+29.0 RT 28.0 FT		4.19	
A-12	STA. 600+29.0 RT 28.0 FT - 600+14.5 RT 35.9 FT		16.50	
B-1	STA. 600+81.8 RT 31.8 FT - 600+79.1 RT 31.0 FT	2.0		3.14
B-2	STA. 600+79.1 RT 31.0 FT - 600+74.8 RT 23.1 FT		8.99	
B-3	STA. 600+74.8 RT 23.1 FT - 600+79.2 RT 15.7 FT	5.0		10.36
B-4	STA. 600+79.2 RT 15.7 FT - 601+07.0 RT 15.7 FT		27.81	
B-5	STA. 601+07.0 RT 15.7 FT - 601+15.7 RT 20.9 FT	10.0		10.70
B-6	STA. 601+15.7 RT 20.9 FT - 601+17.7 RT 24.4 FT		3.99	
B-7	STA. 601+17.7 RT 24.4 FT - 601+16.9 RT 27.1 FT	2.0		3.14
B-8	STA. 601+16.9 RT 27.1 FT - 601+02.4 RT 35.1 FT		16.50	
B-9	STA. 601+02.4 RT 35.1 FT - 600+96.3 RT 23.9 FT		12.73	
B-10	STA. 600+96.3 RT 23.9 FT - 600+81.8 RT 31.8 FT		16.50	
C-1	STA. 601+49.9 RT 29.1 FT - 601+47.2 RT 28.3 FT	2.0		3.14
C-2	STA. 601+47.2 RT 28.3 FT - 601+44.3 RT 23.1 FT		5.93	
C-3	STA. 601+44.3 RT 23.1 FT - 601+48.7 RT 15.7 FT	5.0		10.36
C-4	STA. 601+48.7 RT 15.7 FT - 601+76.5 RT 15.7 FT		27.81	
C-5	STA. 601+76.5 RT 15.7 FT - 601+85.3 RT 20.9 FT	10.0		10.70
C-6	STA. 601+85.3 RT 20.9 FT - 601+85.7 RT 21.7 FT		0.93	
C-7	STA. 601+85.7 RT 21.7 FT - 601+84.9 RT 24.4 FT	2.0		3.14
C-8	STA. 601+84.9 RT 24.4 FT - 601+70.5 RT 32.4 FT		16.50	
C-9	STA. 601+70.5 RT 32.4 FT - 601+64.3 RT 21.2 FT		12.73	
C-10	STA. 601+64.3 RT 21.2 FT - 601+49.9 RT 29.1 FT		16.50	
D-1	STA. 602+17.9 RT 26.4 FT - 602+15.2 RT 25.6 FT	2.0		3.14
D-2	STA. 602+15.2 RT 25.6 FT - 602+13.8 RT 23.1 FT		2.88	
D-3	STA. 602+13.8 RT 23.1 FT - 602+18.3 RT 15.7 FT	5.0		10.39
D-4	STA. 602+18.3 RT 15.7 FT - 602+92.3 RT 8.6 FT	57.5	57.66	
D-5	STA. 602+92.3 RT 8.6 FT - 602+94.5 RT 10.6 FT	2.0		3.26
D-6	STA. 602+94.5 RT 10.6 FT - 602+94.5 RT 27.0 FT		16.40	
D-7	STA. 602+94.5 RT 27.0 FT - 602+34.8 RT 18.3 FT		39.64	
D-8	STA. 602+34.8 RT 18.3 FT - 602+17.9 RT 26.4 FT		16.50	
E-1	STA. 406+74.4 RT 0.3 FT - 406+11.6 LT 9.9 FT	40.3	34.63	
E-2	STA. 406+11.6 LT 9.9 FT - 405+50.1 LT 18.9 FT		59.65	
E-3	STA. 405+50.1 LT 18.9 FT - 405+46.1 LT 25.2 FT	5.0		8.42
E-4	STA. 405+46.1 LT 25.2 FT - 405+49.3 LT 37.0 FT		12.32	
E-5	STA. 405+49.3 LT 37.0 FT - 406+05.5 LT 22.0 FT	992.9	55.68	
E-6	STA. 405+05.5 LT 22.0 FT - 406+20.6 LT 33.3 FT		13.46	
E-7	STA. 406+20.6 LT 33.3 FT - 406+38.0 LT 32.5 FT	5.0		7.89
E-8	STA. 406+38.0 LT 32.5 FT - 406+53.7 LT 6.0 FT		28.15	
E-9	STA. 406+53.7 LT 6.0 FT - 406+47.4 RT 0.3 FT	5.0		10.48
F-1	STA. 406+87.9 LT 14.5 FT - 406+79.2 LT 22.5 FT	8.0		13.20
F-2	STA. 406+79.2 LT 22.5 FT - 406+81.2 LT 24.5 FT	2.0		3.13
F-3	STA. 406+81.2 LT 24.5 FT - 407+14.2 LT 24.6 FT		33.00	
F-4	STA. 407+14.2 LT 24.6 FT - 407+16.2 LT 22.6 FT	2.0		3.16
F-5	STA. 407+16.2 LT 22.6 FT - 407+16.2 LT 16.6 FT		6.01	
F-6	STA. 407+16.2 LT 16.6 FT - 407+14.2 LT 14.6 FT	2.0		3.12
F-7	STA. 407+14.2 LT 14.6 FT - 406+87.9 LT 14.5 FT		26.96	
G-1	STA. 407+42.2 LT 14.7 FT - 407+40.2 LT 16.7 FT	2.0		3.17
G-2	STA. 407+40.2 LT 16.7 FT - 407+40.2 LT 22.7 FT		5.99	
G-3	STA. 407+40.2 LT 22.7 FT - 407+42.2 LT 24.7 FT	2.0		3.13
G-4	STA. 407+42.2 LT 24.7 FT - 407+75.2 LT 24.9 FT		33.00	
G-5	STA. 407+75.2 LT 24.9 FT - 407+77.2 LT 22.9 FT	2.0		3.16
G-6	STA. 407+77.2 LT 22.9 FT - 407+77.2 LT 16.9 FT		6.01	
G-7	STA. 407+77.2 LT 16.9 FT - 407+75.2 LT 14.9 FT	2.0		3.12
G-8	STA. 407+75.2 LT 14.9 FT - 407+42.2 LT 14.7 FT		33.00	
PAGE 1 SUB-TOTAL			700.49	182.81

CURBING (CONT.)

ITEM NO.				609.02
DESCRIPTION			STRAIGHT GRANITE CURB	CURVED GRANITE CURB
UNIT		RADIUS	LF	LF
CURB NUMBER	STATION - STATION			
H-1	STA. 408+03.2 LT 15.0 FT - 408+01.2 LT 17.0 FT	2.0		3.17
H-2	STA. 408+01.2 LT 17.0 FT - 408+01.2 LT 23.0 FT		5.99	
H-3	STA. 408+01.2 LT 23.0 FT - 408+03.2 LT 25.0 FT	2.0		3.13
H-4	STA. 408+03.2 LT 25.0 FT - 408+36.2 LT 25.1 FT		33.00	
H-5	STA. 408+36.2 LT 25.1 FT - 408+38.3 LT 23.1 FT	2.0		3.15
H-6	STA. 408+38.3 LT 23.1 FT - 408+38.2 LT 17.1 FT		6.01	
H-7	STA. 408+38.2 LT 17.1 FT - 408+36.2 LT 15.1 FT	2.0		3.12
H-8	STA. 408+36.2 LT 15.1 FT - 408+03.2 LT 15.0 FT		33.00	
I-1	STA. 407+36.7 RT 25.4 FT - 407+37.9 RT 23.2 FT	2.0		3.14
I-2	STA. 407+34.9 RT 23.2 FT - 407+38.3 RT 19.7 FT		3.54	
I-3	STA. 407+38.3 RT 19.7 FT - 407+43.2 RT 15.3 FT	5.0		7.27
I-4	STA. 407+43.2 RT 15.3 FT - 407+70.4 RT 15.2 FT		27.19	
I-5	STA. 407+70.4 RT 15.2 FT - 407+75.4 RT 20.7 FT	5.0		8.44
I-6	STA. 407+75.4 RT 20.7 FT - 407+74.7 RT 27.4 FT		6.71	
I-7	STA. 407+74.7 RT 27.4 FT - 407+72.4 RT 29.2 FT	2.0		3.14
I-8	STA. 407+72.4 RT 29.2 FT - 407+39.7 RT 25.4 FT		33.00	
J-1	STA. 609+33.5 RT 150.0 FT - 609+74.4 RT 136.2 FT	200.0	43.25	
J-2	STA. 609+74.4 RT 136.2 FT - 611+72.8 RT 44.6 FT		218.48	
K-1	STA. 609+40.0 RT 101.8 FT - 609+38.8 RT 104.6 FT	2.0		3.39
K-2	STA. 609+38.8 RT 104.6 FT - 609+28.8 RT 107.4 FT	157.5	10.34	
K-3	STA. 609+28.8 RT 107.4 FT - 609+25.4 RT 107.9 FT	15.0		3.47
K-4	STA. 609+25.4 RT 107.9 FT - 609+22.0 RT 107.9 FT		3.33	
K-5	STA. 609+22.0 RT 107.9 FT - 609+20.0 RT 105.9 FT	2.0		3.14
K-6	STA. 609+20.0 RT 105.9 FT - 609+19.6 RT 72.9 FT		33.00	
K-7	STA. 609+19.6 RT 72.9 FT - 609+21.5 RT 70.9 FT	2.0		3.14
K-8	STA. 609+21.5 RT 70.9 FT - 609+24.3 RT 70.9 FT		2.82	
K-9	STA. 609+24.3 RT 70.9 FT - 609+26.2 RT 72.0 FT	2.0		2.30
K-10	STA. 609+26.2 RT 72.0 FT - 609+40.0 RT 101.8 FT		32.83	
L-1	STA. 609+55.0 RT 31.2 FT - 609+40.4 RT 37.9 FT		16.14	
L-2	STA. 609+40.4 RT 37.9 FT - 609+12.4 RT 46.2 FT	101.0	29.24	
L-3	STA. 609+12.4 RT 46.2 FT - 609+10.2 RT 44.2 FT	2.0		3.40
L-4	STA. 609+10.2 RT 44.2 FT - 609+09.9 RT 28.6 FT		15.67	
L-5	STA. 609+09.9 RT 28.6 FT - 609+53.6 RT 28.0 FT		43.63	
L-6	STA. 609+53.6 RT 28.0 FT - 609+55.0 RT 31.2 FT		3.50	
M-1	STA. 609+79.9 RT 9.1 FT - 609+82.1 RT 18.6 FT	5.0		13.61
M-2	STA. 809+82.1 RT 18.6 FT - 609+57.3 RT 30.1 FT		27.32	
M-3	STA. 609+57.3 RT 30.1 FT - 609+54.9 RT 24.9 FT		5.75	
M-4	STA. 609+54.9 RT 24.9 FT - 609+54.7 RT 11.5 FT		13.43	
M-5	STA. 609+54.7 RT 11.5 FT - 609+56.7 RT 9.4 FT	2.0		3.14
M-6	STA. 609+56.7 RT 9.4 FT - 609+79.9 RT 9.1 FT		23.26	
N-1	STA. 611+32.0 RT 16.6 FT - 611+06.5 RT 28.4 FT		28.13	
N-2	STA. 611+06.5 RT 28.4 FT - 611+03.8 RT 27.4 FT	2.0		3.14
N-3	STA. 611+03.8 RT 27.4 FT - 610+96.9 RT 12.4 FT		16.50	
N-4	STA. 610+96.9 RT 12.4 FT - 610+64.2 RT 27.5 FT		36.00	
N-5	STA. 610+64.2 RT 27.5 FT - 610+57.3 RT 12.5 FT		16.50	
N-6	STA. 610+57.3 RT 12.5 FT - 610+58.3 RT 9.9 FT	2.0		3.14
N-7	STA. 610+58.3 RT 9.9 FT - 610+59.6 RT 9.3 FT		1.37	
N-8	STA. 610+59.6 RT 9.3 FT - 610+65.6 RT 7.9 FT	15.0		6.28
N-9	STA. 610+65.6 RT 7.9 FT - 611+29.9 RT 7.0 FT		64.24	
N-10	STA. 611+29.9 RT 7.0 FT - 611+32.0 RT 16.6 FT	5.0		13.61
O-1	STA. 68+46.6 RT 14.5 FT - 68+51.9 RT 14.2 FT	15.0		5.51
O-2	STA. 68+51.9 RT 14.2 FT - 68+86.9 RT 20.8 FT		37.50	
O-3	STA. 68+86.9 RT 20.8 FT - 70+91.1 RT 21.4 FT		204.02	
O-4	STA. 70+91.1 RT 21.4 FT - 77+71.8 RT 27.0 FT	408.2	646.73	
O-5	STA. 77+71.8 RT 27.0 FT - 78+05.0 RT 30.4 FT		33.38	
	PAGE SUB-TOTAL =		1754.80	101.65
	PAGE 1 SUB-TOTAL =		700.49	182.81
	TOTAL REQUIRED =		2455.29	284.66
	CURB TO BE RESET =		-2500.00	0.0
SUB-TOTAL			-44.7	284.7
ROUNDING			0.0	15.34
TOTAL			0	300

CURB REMOVAL QUANTITY CALCULATION

ITEM NO.		609.5
DESCRIPTION		RESET GRANITE CURB
UNIT		LF
LOCATION	STATION - STATION	
AUXILIARY PARKING	STA. 402+31.3 LT 21.9 FT - 404+07.7 LT 31.0 FT	377.57
	STA. 403+63.1 LT 76.2 FT - 404+20.5 LT 72.1 FT	152.63
	STA. 404+27.9 LT 132.3 FT - 404+35.9 LT 129.3 FT	89.69
	STA. 404+38.1 LT 46.9 FT - 406+52.9 LT 14.9 FT	505.53
	STA. 405+85.1 LT 65.7 FT - 407+10.5 LT 19.6 FT	170.38
	STA. 407+36.0 LT 20.6 FT - 407+73.5 LT 20.4 FT	90.16
	STA. 407+98.6 LT 22.9 FT - 408+36.0 LT 22.4 FT	96.48
	STA. 407+32.8 RT 36.1 FT - 407+71.1 RT 26.7 FT	114.42
	STA. 600+34.9 RT 16.4 FT - 600+54.2 RT 91.1 FT	223.49
	STA. 603+70.7 RT 110.5 FT - 603+71.4 RT 73.1 FT	89.56
	STA. 603+70.8 RT 47.9 FT - 603+71.2 RT 9.9 FT	90.19
	STA. 609+48.1 RT 148.9 FT - 610+62.8 RT 92.1 FT	128.27
	STA. 608+92.6 RT 98.2 FT - 610+39.2 RT 9.8 FT	440.50
	STA. 609+30.5 RT 37.0 FT - 609+98.7 RT 16.5 FT	184.95
LOOP ROAD	STA. 68+46.6 LT 14.6 FT - 76+87.9 LT 16.8 FT	824.48
	STA. 77+02.8 LT 16.8 FT - 77+69.2 LT 18.7 FT	65.29
	CURB AVAILABLE FOR RESET =	3643.60
	- 20% BREAKAGE =	-728.72
	CURB TO BE RESET =	2914.88
	AMOUNT OF CURB NEEDED =	2455.29
SUB-TOTAL		2,455.3
ROUNDING		44.7
TOTAL		2,500

REVISIONS AFTER PROPOSAL

NUMBER	DATE	STATION	STATION	DESCRIPTION

		DATE
SDR PROCESSED	CLB	DATE 6/2014
NEW DESIGN	CAC	DATE 6/16/14
SHEET CHECKED		
AS BUILT DETAILS		DATE

STATE OF NEW HAMPSHIRE

DEPARTMENT OF TRANSPORTATION • BUREAU OF HIGHWAY DESIGN

SUMMARY OF QUANTITIES

DGN	STATE PROJECT NO.	SHEET NO.	TOTAL SHEETS
20222A_Sum	20222B	7	42

DRAINAGE

ITEM NO.	201.101**	585.3	593.421	603.00212	603.82212	604.0007	604.12	604.22	604.4	604.62	604.9101	604.9102	670.02	NOTES
DESCRIPTION	CLEARING AND GRUBBING	STONE FILL, CLASS C	GEOTEXTILE; PERM. CONTROL CL. 2, NON-WOVEN	12" R.C. PIPE, 2000D	12" POLY-ETHYLENE PIPE (TYPE S)	POLY-ETHYLENE LINER	CATCH BASINS, TYPE B	DROP INLETS, TYPE B	RECONSTRUCT ADJUSTING CATCH BASIN & DROP INLET	DRAINAGE MANHOLE FRAMES AND COVERS	OUTLET CONTROL STRUCTURE	OUTLET CONTROL STRUCTURE	SEDIMENT SUMP MEASURING BLOCK	
UNIT	A	CY	SY	LF	LF	EA	U	U	LF	EA	U	U	EA	
DN														
1				48.5		1	1.0							
2				14.9		1	1.0							
3				49.1		1	1.0							
4														
5						1	1.0							
6					14.9	1		1.0						
7					8.3	1	1.0		2	1				
8					7.9	1		1.0	2	1				
9		5.0	15.0								1		1	
10		5.0	12.0									1	1	
11	0.02	20.0	65.0											
EXISTING STRUCTURES (NO DNs)									26					
SUB-TOTAL	0.02	30.0	92.0	112.5	31.1	7	5.0	2.0	30	2	1	1	2	
ROUNDING		10.0	8.0	7.5	3.9	0	0.0	0.0	2	0	0	0	0	
TOTAL	**	40	100	120	35	7	5	2	32	2	1	1	2	

** SUB-TOTAL TO CLEARING AND GRUBBING SUMMARY

LIGHTING AND CONDUITS

REF. NO.	REF. LINE FOR CONDUIT RUN	ITEM NO. / DESCRIPTION	203.2** ROCK EXCAVATION	614.331 3" STEEL CONDUIT	614.511 CONCRETE PULL BOX 14"	614.522 MOLDED PULL BOX, 13" x 24"	614.523 MOLDED PULL BOX, 17" x 30"	614.72114 2" PVC CONDUIT, SCHEDULE 40	614.72118 2" PVC CONDUIT, SCHEDULE 80	614.73118 3" PVC CONDUIT, SCHEDULE 80	614.73214 3" - 2 DUCT PVC CONDUIT, SCHEDULE 40	614.74118 4" PVC CONDUIT, SCHEDULE 80	621.61 FIBER OPTIC DELINEATOR	625.25 CONCRETE LIGHT POLE BASE, TYPE B (2' REVEAL)	625.622 RESET/RELOCATE LIGHT POLE WITHOUT BREAKAWAY BASE	677.51024 24-STRAND SINGLE MODE FIBER OPTIC CABLE	677.53 FIBER OPTIC SPLICE	677.562 FIBER OPTIC PATCH PANEL (24-POSITION)	677.5822 1 GBPS FIBER ETHERNET SWITCH
		UNIT	CY	LF	EA	EA	EA	LF	LF	LF	LF	LF	EA	EA	EA	LF	EA	EA	EA
		MAIN PARKING LOT																	
1	EXIST - 1	STA 76+51.5 LT 14.8' - STA 76+54.9 LT 32.2'				1			36							225	1	1	1
2	EXIST - 2	STA 70+77.6 LT 12.0' - STA 70+66.8 LT 28.8'	1		1					25				1	1				
3	1 - 3	STA 76+54.9 LT 32.2' - STA 70+21.0 LT 28.7'				1		645								700			
4	EXIST - 4	STA 70+26.4 RT 78.8' - STA 69+97.1 LT 29.4'				1						65					1	1	
		AUXILIARY PARKING LOT																	
5	EXIST - 5	STA 406+56.6 RT 49.8' - STA 406+44.2 RT 63.8'					1				24								
6	5 - 6	STA 406+44.2 RT 63.8' - STA 611+00.4 RT 80.6'					1				383		1						
7	6 - 7	STA 611+00.4 RT 80.6' - STA 612+03.9 RT 32.2'					1				109								
8	7 - 8	STA 612+03.9 RT 32.2' - STA 612+03.9 LT 13.9'					1				41								
9	8 - 9	STA 612+03.9 LT 13.9' - STA 721+34.0 RT 19.5'					1				69								
10	9 - 10	STA 721+34.0 RT 19.5' - STA 719+02.6 RT 19.6'					1				226		1						
11	10 - 11	STA 719+02.6 RT 19.6' - STA 716+36.1 RT 17.5'					1				259		1						
12	11 - 12	STA 716+36.1 RT 17.5' - STA 409+12.0 RT 25.6'					1				35								
13	12 - 13	STA 409+12.0 RT 25.6' - STA 409+13.1 LT 27.1'		50			1												
19	N/A	STA 610+38.8 RT 20.5'	1																
20	19 - 20	STA 610+38.8 RT 20.5' - STA 610+96.7 RT 10.2'			1					65				1	1				
		TOTALS																	
MAIN PARKING LOT			1	0	1	3	0	645	36	25	0	65	0	1	1	925	2	2	1
AUXILIARY PARKING LOT			1	50	1	0	9	0	0	65	1146	0	3	1	1	0	0	0	0
SUB-TOTAL			2	50	2	3	9	645	36	90	1146	65	3	2	2	925	2	2	1
ROUNDING			0	0	0	0	0	0	0	10	4	0	0	0	0	0	0	0	0
TOTAL			**	50	2	3	9	645	36	100	1150	65	3	2	2	925	2	2	1

** SUB-TOTAL TO EARTHWORK SUMMARY

PERMANENT CONSTRUCTION SIGNS AND WARNING DEVICES

(INCLUDED IN ITEM 619.1)

IDENT. NO.	DESCRIPTION	SIZE (FT)	S.F.	NO. REQ.	TOTAL AREA	POSTS	PORTABLE SIGN SUPPORTS	LOCATION
G20-2a	END ROAD WORK	2 x 4	8	2	16	4		ON GRAFTON ROAD
M4-9R	DETOUR (W/ RIGHT ARROW)	2 x 2.5	5.0	3	15		3	AS NEEDED
M4-9L	DETOUR (W/ LEFT ARROW)	2 x 2.5	5.0	3	15		3	AS NEEDED
M4-9S	DETOUR (W/ STRAIGHT ARROW)	2 x 2.5	5.0	3	15		3	AS NEEDED
R11-2	ROAD CLOSED	4 x 2.5	10.0	6	60			AS NEEDED, MOUNT ON TYPE III BARRIERS
R50-1	WORK ZONE SPEED	4 x 6	24	2	48	4		GRAFTON ROAD
W20-1a	ROAD WORK AHEAD	4 x 4	16	4	64		4	AS NEEDED
W20-1c	ROAD WORK 1000 FT	4 x 4	16	2	32	4		GRAFTON ROAD

The estimated quantities of "Permanent Controls" are hereby listed. The Contractor is responsible for all "Operational Controls" required under section 619 of the NHDOT Specifications and the Manual on Uniform Traffic Control Devices (MUTCD), Part VI.

SUBSIDIARY ITEMS

DESCRIPTION	QUANTITY
REMOVING TRAFFIC SIGN, TYPE CC	8 U
REMOVING TRAFFIC SIGN, TYPE C	37 U
REMOVING TRAFFIC SIGN, TYPE B	5 U
REMOVAL OF PULL BOXES	7 EA

NOTE: THIS LIST SHOULD NOT BE CONSIDERED TO BE A LIST OF ALL SUBSIDIARY WORK PRESENT IN THE PROJECT. REFER ALSO TO THE PLANS, PROPOSAL, SPECIAL PROVISIONS, AND THE STANDARD SPECIFICATIONS.

FORCE ACCOUNT WORK

DESCRIPTION
STATE OF NEW HAMPSHIRE - BUREAU OF TRAFFIC
REVIEW OF SIGNS AND PAVEMENT MARKINGS
PUBLIC SERVICE OF NEW HAMPSHIRE
PERMANENT LIGHTING
STATE OF NEW HAMPSHIRE - BUREAU OF ENVIRONMENT
INSTALL FLUSH CAP ON MONITORING WELL

PERMANENT SIGNING

ITEM NO.	ITEM DESCRIPTION	UNIT	QUANTITY
615.02	TRAFFIC SIGN TYPE B (F)	SF	5.00
615.03	TRAFFIC SIGN TYPE C (F)	SF	125.25
615.06	TRAFFIC SIGN TYPE CC (F)	SF	15.75

STATE OF NEW HAMPSHIRE

DEPARTMENT OF TRANSPORTATION ∘ BUREAU OF HIGHWAY DESIGN

SUMMARY OF QUANTITIES

DGN	STATE PROJECT NO.	SHEET NO.	TOTAL SHEETS
20222A_Sum	20222B	8	42

REVISIONS AFTER PROPOSAL

NUMBER	DATE	STATION	STATION	DESCRIPTION

SDR PROCESSED DATE
NEW DESIGN CLB DATE 6/2014
SHEET CHECKED CAC DATE 6/16/14
AS BUILT DETAILS DATE

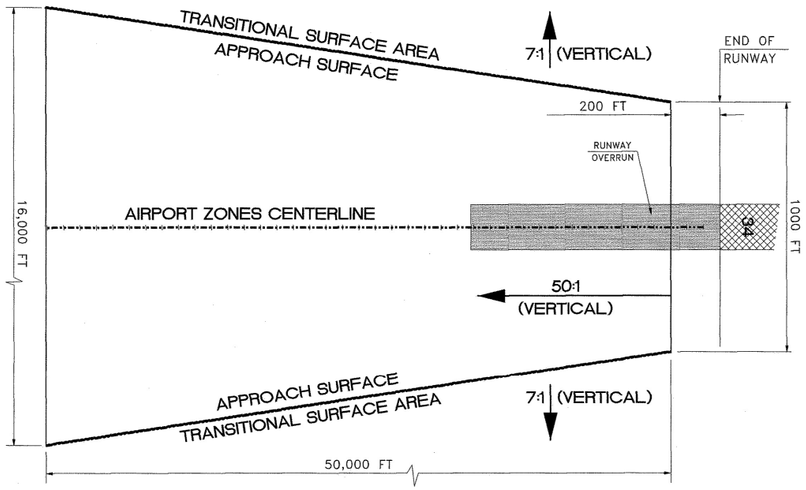

AIRPORT ZONES

300 0 300 600

SCALE IN FEET

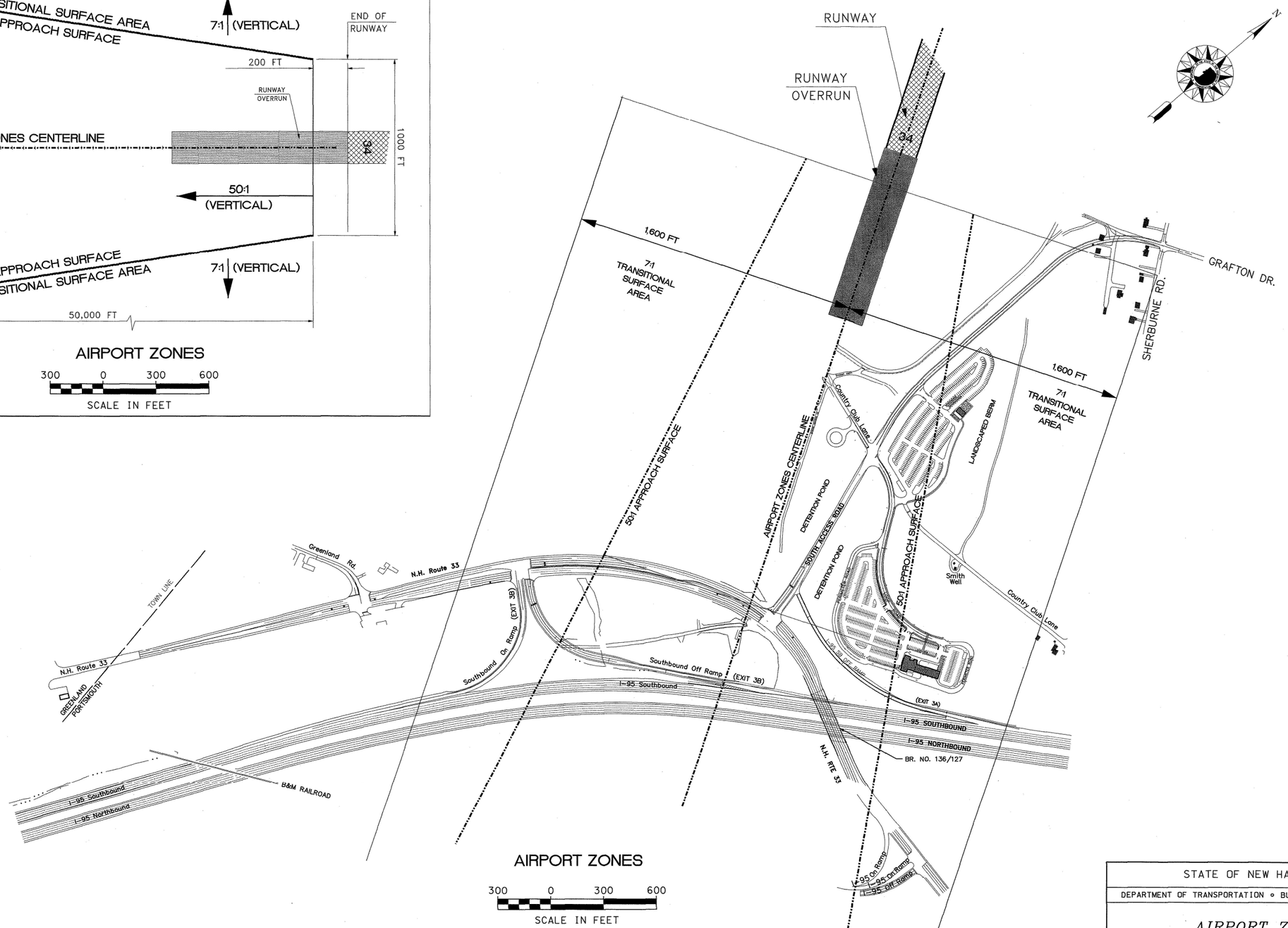

AIRPORT ZONES

300 0 300 600

SCALE IN FEET

STATE OF NEW HAMPSHIRE			
DEPARTMENT OF TRANSPORTATION • BUREAU OF HIGHWAY DESIGN			
AIRPORT ZONES			
DGN	STATE PROJECT NO.	SHEET NO.	TOTAL SHEETS
20222B_AirportZones	20222B	9	42

REVISIONS AFTER PROPOSAL			
NUMBER	DATE	STATION	DESCRIPTION

SDR PROCESSED		DATE
NEW DESIGN	CAC	DATE 6/2014
SHEET CHECKED	M. POULIOT	DATE 6/12/14
AS BUILT DETAILS		DATE

28_AirportZones.dgn 6/16/2014 9:12:25 AM "n34c1b"

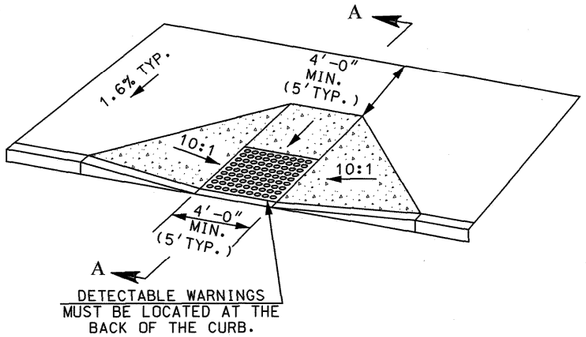

PERPENDICULAR CURB RAMP DETAIL

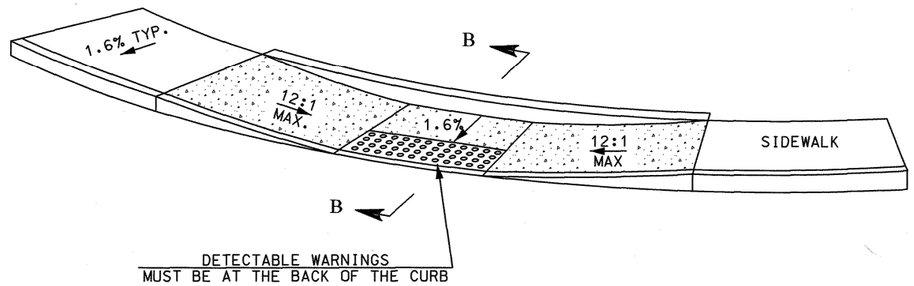

PARALLEL CURB RAMP DETAIL

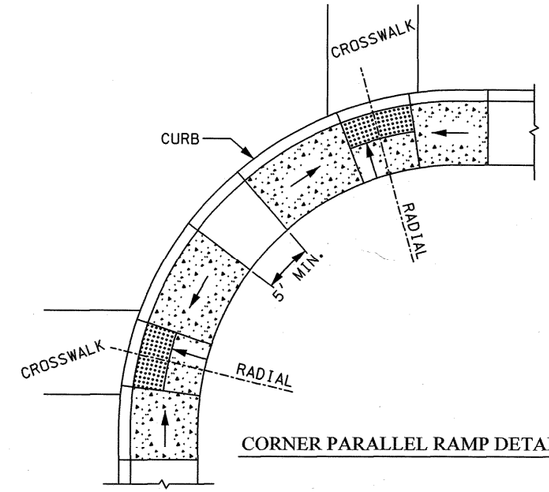

CORNER PARALLEL RAMP DETAIL

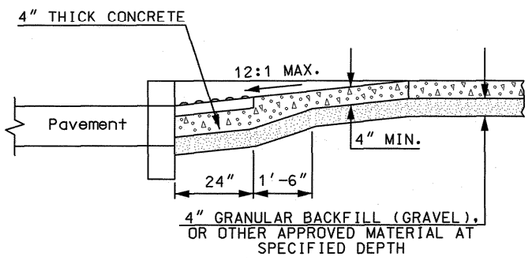

SECTION A-A

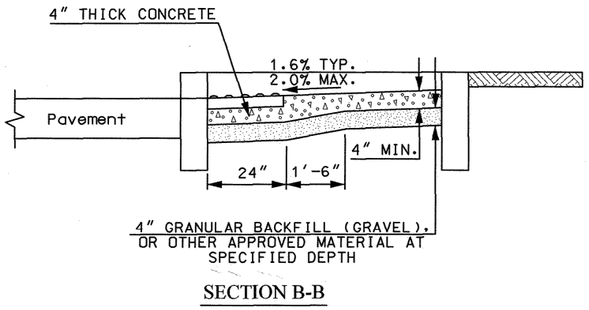

SECTION B-B

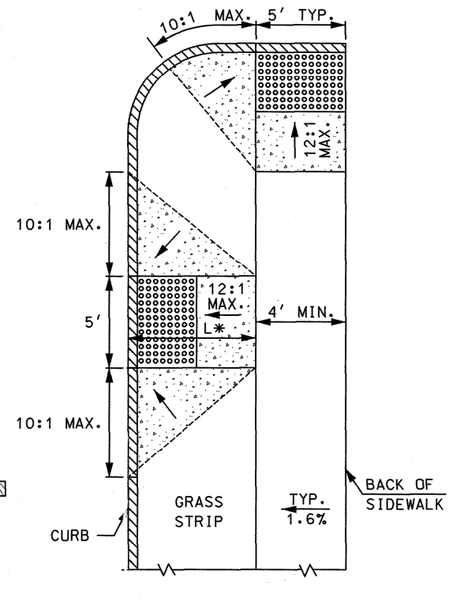

PERPENDICULAR RAMP WITH GRASS PANEL

* LENGTH OF RAMP VARIES WITH SLOPE & WIDTH OF GRASS PANEL

TRANSITION RAMPS:

BLENDED TRANSITIONS HAVE A RUNNING SLOPE GREATER THAN 2% BUT LESS THAN 5%. CURB RAMPS HAVE A RUNNING SLOPE OF 5% MIN. TO 8.33% MAX. SIDEWALK, BLENDED TRANSITIONS, AND CURB RAMPS HAVE A MAX. CROSS SLOPE OF 2%.

ALL GRADE BREAKS BETWEEN LANDINGS, RAMPS, AND BLENDED TRANSITIONS SHALL BE PERPENDICULAR TO THE DIRECTION OF TRAVEL.

IF IT IS NECESSARY TO USE SIDEWALK WIDTHS 5'-0" OR LESS, PROVIDE A WIDENED AREA A MINIMUM OF 5'-0" WIDE BY 5'-0" LONG SPACED AT INTERVALS OF 200' MAXIMUM TO ALLOW FOR USERS TO PASS EACH OTHER.

PROVIDE DETECTABLE WARNING SURFACES ANYTIME THAT A CURB RAMP, BLENDED TRANSITION, OR LANDING CONNECTS TO A STREET. PLACEMENT FOR DETECTABLE WARNING SURFACES ARE AS FOLLOWS:

PERPENDICULAR CURB RAMPS:

WHERE BOTH ENDS OF THE BOTTOM GRADE ARE LESS THAN 5'- 0" FROM THE BACK OF THE CURB, LOCATE THE DETECTABLE WARNING PANELS ON THE RAMP SURFACE AT THE BOTTOM OF THE RAMP. WHERE EITHER END OF THE BOTTOM GRADE IS GREATER THAN 5'-0" FROM THE BACK OF THE CURB, LOCATE THE DETECTABLE WARNINGS AT THE BOTTOM OF THE LANDING.

PARALLEL CURB RAMPS:

LOCATE THE DETECTABLE WARNING SURFACES AT THE BACK OF THE CURB ALONG THE EDGE OF THE LANDING.

FOR BLENDED TRANSITIONS AND LANDINGS:

LOCATE THE DETECTABLE WARNING SURFACES AT THE BACK OF THE CURB.

THE ORDER OF PREFERENCE FOR LOCATION OF CORNER RAMPS:

1. TWO SEPARATE RAMPS LOCATED ON TANGENT SIDEWALK AREA IMMEDIATELY OUTSIDE OF CORNER RADIUS.
2. TWO SEPARATE RAMPS SEPARATED BY 5' MINIMUM AS SHOWN ABOVE.
3. SINGLE RAMP SERVING TWO CROSSWALKS.

GENERAL NOTES

1. THE MAXIMUM RUNNING SLOPE OF ANY SIDEWALK CURB RAMP IS 12:1. THE MAXIMUM CROSS SLOPE IS 2%. THE SLOPE OF THE LANDING SHALL NOT EXCEED 2% IN ANY DIRECTION.

   RAMP RUNNING SLOPE EXCEPTION: A GREATER THAN 8.33% RAMP RUNNING GRADE IS ALLOWED WHERE THE THE ROADWAY AND THE SIDEWALK(S) ARE PARALLEL AND VERY CLOSE TOGETHER, WITH THE SAME GRADE, AND USING A GRADE OF 8.33% WOULD RESULT IN A RAMP LENGTH LONGER THAN 15'. IN THOSE CIRCUMSTANCES USE A MAXIMUM RAMP LENGTH OF 15' AND THE ALLOWABLE RUNNING SLOPE OF THE RAMP(S) IS GREATER THAN 8.33%.
2. TRANSITIONS SHALL BE FLUSH AND FREE OF ABRUPT CHANGES. ROADWAY SHOULDER SLOPES ADJOINING SIDEWALK CURB RAMPS SHALL BE A MAXIMUM OF 5% (FULL WIDTH) FOR A DISTANCE OF 2 FT. FROM THE ROADWAY CURBLINE.
3. INTERCEPT DRAINAGE ALONG THE CURB IN ADVANCE OF SIDEWALK CURB RAMPS OR LANDINGS. CATCH BASINS, MANHOLES, ETC. SHALL NOT BE LOCATED IN, OR AT THE BASE OF, SIDEWALK CURB RAMPS OR LANDINGS.
4. THE BOTTOM OF THE SIDEWALK CURB RAMP OR LANDING, EXCLUSIVE OF THE FLARED SIDES, SHALL BE WHOLLY CONTAINED WITHIN THE CROSSWALK MARKINGS.
5. THE SURFACE OF A PERPENDICULAR SIDEWALK CURB RAMP OR THE LANDING OF A PARALLEL SIDEWALK CURB RAMP SHALL CONTRAST VISUALLY WITH THE ADJOINING SIDEWALK SURFACE, EITHER ASPHALT/LIGHT-COLORED CONCRETE OR LIGHT-COLORED CONCRETE/DARK-STAINED CONCRETE. THE CONCRETE SURFACE SHALL BE SLIP RESISTANT.
6. DETECTABLE WARNING PANELS SHALL BE THE FULL WIDTH OF THE LANDING, BLENDED TRANSITION, OR CURB RAMP THEY ARE A PART OF AND SHALL BE A MINIMUM OF 2 FEET IN DEPTH. THE ROWS OF TRUNCATED DOMES SHALL BE ALIGNED PERPENDICULAR TO THE GRADE BREAK BETWEEN THE RAMP, BLENDED TRANSITION, OR LANDING AND THE STREET.

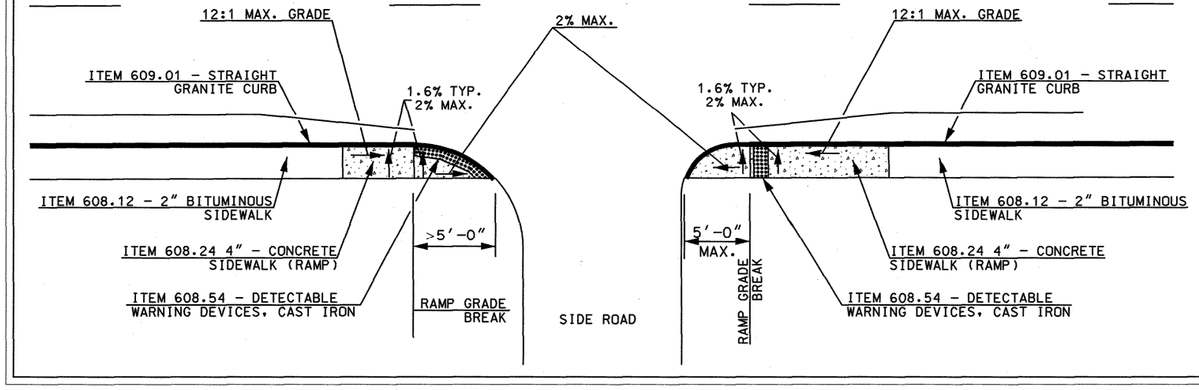

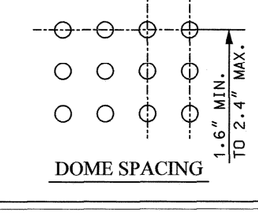

DOME SPACING

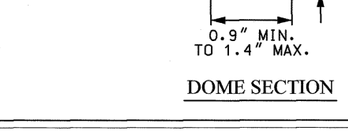

DOME SECTION

STATE OF NEW HAMPSHIRE			
DEPARTMENT OF TRANSPORTATION • BUREAU OF HIGHWAY DESIGN			
SIDEWALK CURB RAMPS WITH DETECTABLE WARNINGS			
DGN	STATE PROJECT NO.	SHEET NO.	TOTAL SHEETS
20222B_CurbRamps	20222B	10	42

2B_CurbRamps.dgn 6/16/2014 11:56:15 AM "h34c1b"

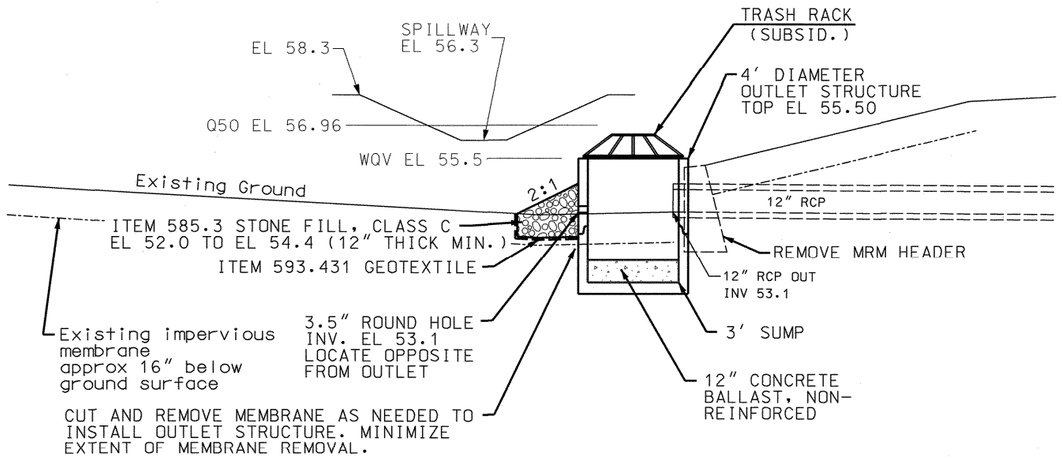

OUTLET CONTROL STRUCTURE DETAIL
WEST POND, ITEM 604.9101

NOT TO SCALE

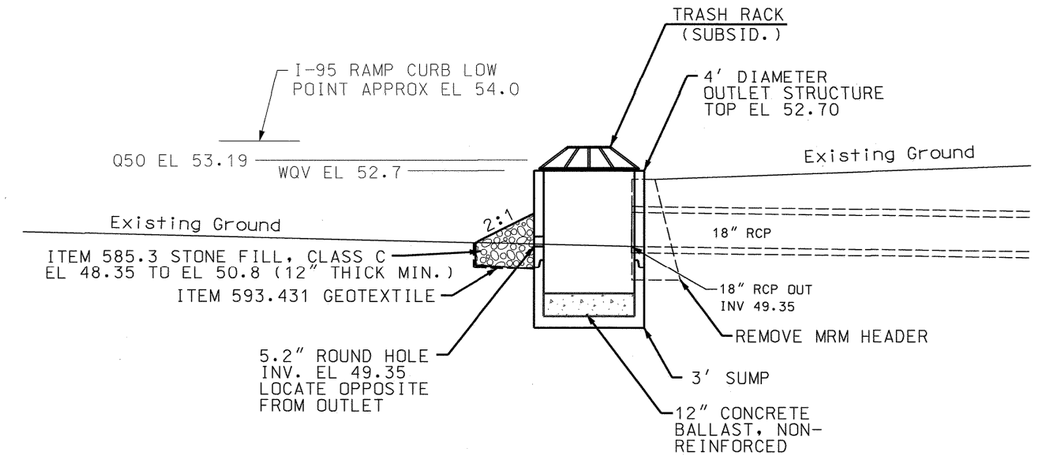

OUTLET CONTROL STRUCTURE DETAIL
EAST POND, ITEM 604.9102

NOT TO SCALE

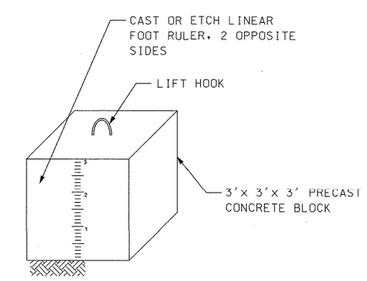

SEDIMENT SUMP MEASURING BLOCK
ITEM 670.02

NOT TO SCALE

GENERAL NOTES

1. OUTLET CONTROL STRUCTURE TO BE PRECAST WITH HOLE SIZES AND SPACING AS SHOWN. ANY FIELD ADJUSTMENTS SHALL BE APPROVED BY THE CONTRACT ADMINISTRATOR. LOW FLOW HOLE SHALL BE CAST WITH THE SECTION TO AVOID EXPOSED REINFORCEMENT. STRUCTURE SHALL COMPLY WITH ALL APPLICABLE PARTS OF STANDARD DR-5. ALSO SEE SPECIAL PROVISION FOR ITEMS 604.910X.
2. ALL HARDWARE TO BE HOT DIPPED GALVANIZED.
3. LOCATION AND ORIENTATION OF SEDIMENT MEASURING BLOCK SHALL BE AS DIRECTED.
4. HUMUS AND SEED ALL EARTH SLOPES AS SOON AS POSSIBLE. STABILIZE THE INLET AREA WITH REQUIRED EROSION CONTROL.

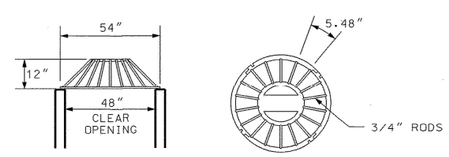

CONE GRATE TRASHRACK DETAIL

NOT TO SCALE
SUBSIDIARY TO ITEM 604.910X

REVISIONS AFTER PROPOSAL			
NUMBER	DATE	STATION	DESCRIPTION

SDR PROCESSED		DATE	
NEW DESIGN	CAC	DATE	5/2014
SHEET CHECKED	NAME3	DATE	DATE3
AS BUILT DETAILS		DATE	

STATE OF NEW HAMPSHIRE

DEPARTMENT OF TRANSPORTATION • BUREAU OF HIGHWAY DESIGN

DRAINAGE DETAILS

DGN	STATE PROJECT NO.	SHEET NO.	TOTAL SHEETS
20222N_DrainageDetails	20222B	11	42

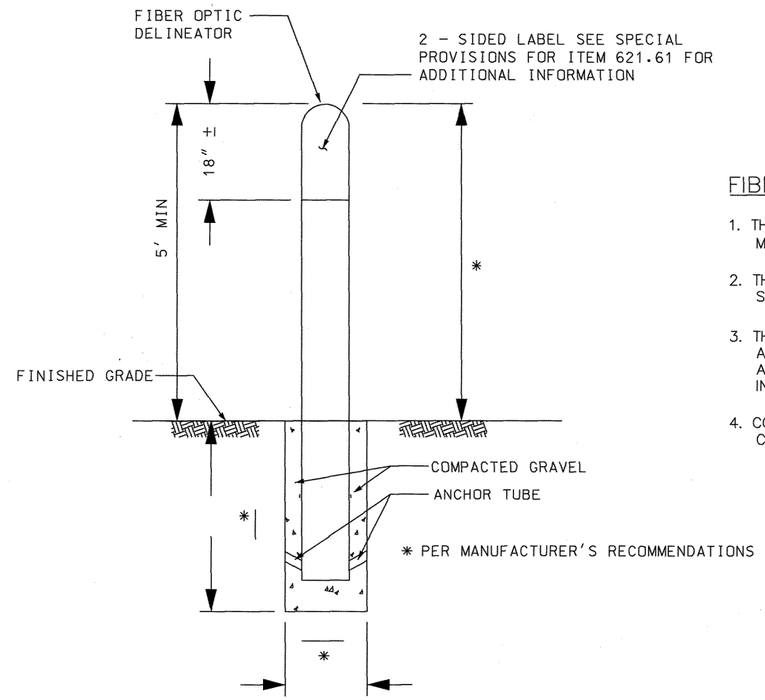

FIBER OPTIC DELINEATOR (FOD)
ITEM 621.61
NOT TO SCALE

FIBER OPTIC DELINEATOR (FOD) NOTES

1. THE FOD SHALL BE FURNISHED AND INSTALLED IN ACCORDANCE WITH THE MANUFACTURER'S RECOMMENDATIONS AND THE PLAN DETAILS.
2. THE FOD SHALL BE INSTALLED CONCURRENTLY WITH THE CONDUIT SYSTEM AND SHALL BE IN PLACE BEFORE THE FIBER OPTIC CABLE INSTALLATION.
3. THE FOD SHALL BE LOCATED AT APPROXIMATELY 500' INTERVALS AND AT ANGLE POINTS. CONTRACTOR SHALL BE RESPONSIBLE TO MAKE ANY FIELD ADJUSTMENT TO THESE LOCATIONS SUCH THAT THE MARKER SHALL NOT INTERFERE WITH CABLE INSTALLATION OR MAINTENANCE.
4. CONTRACTOR SHALL REMOVE AND REPLACE ANY FOD DAMAGED DUE TO CONSTRUCTION ACTIVITIES AT NO ADDITIONAL COST TO THE STATE.

REVISIONS AFTER PROPOSAL

NUMBER	DATE	STATION	STATION	DESCRIPTION

SDR PROCESSED DATE
NEW DESIGN TGP DATE 7/2012
SHEET CHECKED PDC DATE 8/2012
AS BUILT DETAILS DATE

STATE OF NEW HAMPSHIRE
DEPARTMENT OF TRANSPORTATION • BUREAU OF HIGHWAY DESIGN

FIBER OPTIC DETAILS

DGN	STATE PROJECT NO.	SHEET NO.	TOTAL SHEETS
20222B_ITS_Detai	20222B	12	42

3_ITS_Detail.dgn 6/16/2014 2:01:42 PM "n4cnc"

1

STA. 610+88.0 LT 41.9' - 610+87.9 RT 6.6'
CONST. 48' x 12" REINFORCED CONC. PIPE
CONST. CATCH BASIN, TYPE B @ +88.0 LT 41.9'
WITH POLY. LINER
12" INV OUT = 74.30
GRATE ELEV = 77.00

2

STA. 610+87.9 RT 6.6' - 610+87.9 RT 21.5'
CONST. 15' x 12" REINFORCED CONC. PIPE
CONST. CATCH BASIN, TYPE B @ +87.9 RT 6.6'
WITH POLY. LINER
12" INV IN = 73.85
12" INV OUT = 73.85
GRATE ELEV = 77.80

3

STA. 611+35.8 RT 10.6' - 610+87.9 RT 21.5'
CONST. 49' x 12" REINFORCED CONC. PIPE
CONST. CATCH BASIN, TYPE B @ +35.8 RT 10.6'
WITH POLY. LINER
12" INV OUT = 74.45
GRATE ELEV = 78.05

4

STA. 610+87.9 RT 21.5'
RECONSTRUCT EXIST. CATCH BASIN
CONNECT PIPES TO EXIST. CATCH BASIN (SUBSID.)
12" INV IN = 73.70
12" INV IN = 73.70
12" INV OUT = 73.70
GRATE ELEV = 77.53

5

STA. 609+55.8 RT 29.9' - 607+70.2 RT 47.7'
CONST. CATCH BASIN, TYPE B @ +55.8 RT 29.9'
WITH POLY. LINER
CONNECT EXIST. REINFORCED CONC. PIPE (SUBSID.)
12" INV IN = 73.10
12" INV OUT = 73.08
GRATE ELEV = 79.42

6

STA. 73+02.8 LT 36.0' - 73+02.8 LT 21.1'
CONST. 15' x 12" POLYETH. PIPE
CONST. DROP INLET, TYPE B @ +02.8 LT 36.0'
WITH POLY. LINER
REMOVE EXIST. PIPE AND DROP INLET (SUBSID.)
12" INV OUT = 64.06
GRATE ELEV = 69.06

7

STA. 73+02.8 LT 21.1' - 73+02.7 LT 12.8'
CONST. 9' x 12" POYLETH. PIPE
CONST. CATCH BASIN, TYPE B @ +02.8 LT 21.1'
WITH POLY. LINER
REMOVE EXIST. MANHOLE @ 02.8 LT 21.1' (SUBSID.)
12" INV IN = 63.98
12" INV OUT = 63.95
GRATE ELEV = 70.81
CONVERT EXIST. CB TO MANHOLE @ +02.7 LT 12.8'
(ITEMS 604.4 AND 604.62)
12" INV IN = 63.75
COVER ELEV = 71.13

8

STA. 74+47.8 LT 21.9' - 74+47.8 LT 14.0'
CONST. 8' x 12" POLYETH. PIPE
CONST. DROP INLET, TYPE B @ +47.8 LT 21.9'
WITH POLY. LINER
12" INV OUT = 67.24
GRATE ELEV = 72.17
CONVERT EXIST. DROP INLET TO MANHOLE @ +47.8 LT 14.0'
(ITEMS 604.4 AND 604.62)
12" INV IN = 67.11
COVER ELEV = 72.46

9

STA. 703+67.1 LT 82.7'
REMOVE EXISTING MRM HEADER (SUBSID.)
CONST. OUTLET CONTROL STRUCTURE (ITEM 604.9101)
CONST. 5 CY STONE FILL, CLASS C AND GEOTEXTILE
SEE DETAILS FOR ADDITIONAL INFORMATION
12" RCP INV OUT = 53.10
ORIFICE 1 = 53.10
ORIFICE 2 = 55.50
TOP OF STRUC = 55.50

10

STA. 509+88 RT 25'
REMOVE EXISTING MRM HEADER (SUBSID.)
CONST. OUTLET CONTROL STRUCTURE (ITEM 604.9102)
CONST. 5 CY STONE FILL, CLASS C AND GEOTEXTILE
RESET 54 LF OF 6' CHAIN LINK FENCE
SEE DETAILS FOR ADDITIONAL INFORMATION
18" RCP INV OUT = 49.35
ORIFICE 1 = 49.35
TOP OF STRUC = 52.70

11

STA. 364+55 LT 62' TO STA. 366+07 LT 98'
REMOVE VEGETATION FROM BOTTOM OF SWALE (ITEM 201.101)
REPAIR STONE FILL AS DIRECTED (ITEMS 593.421 AND 585.3)

REVISIONS AFTER PROPOSAL			
NUMBER	DATE	STATION	DESCRIPTION

SDR PROCESSED		DATE
NEW DESIGN	CLB	DATE 5/2014
SHEET CHECKED	CAC	DATE 6/2014
AS BUILT DETAILS		DATE

STATE OF NEW HAMPSHIRE

DEPARTMENT OF TRANSPORTATION • BUREAU OF HIGHWAY DESIGN

DRAINAGE NOTES

DGN	STATE PROJECT NO.	SHEET NO.	TOTAL SHEETS
20222A_DNs	20222B	13	42

ITEM #	IDENT #	SIGN SIZE WIDTH (inch)	SIGN SIZE HEIGHT (inch)	TEXT	TEXT DIMENSIONS LETTER HEIGHT (inch) UC	LC	CAPS	SHIELD SIZE (inch)	ARROW (inch)	NUMERAL (inch)	# SIGNS REQ'D	SIGN AREA (SQ. FT.) NOM AREA	TOTAL AREA	POSTS PER SIGN BREAKAWAY	STEEL I-BEAM	CONCRETE BASE	4" OD ALUMINUM	U-CHANNEL-GALV.	REMARKS
615 03	R1-1	30	30	STOP			10C				13	6 25	81 25					1	WHITE/RED
615 03	R5-1	30	30	DO NOT ENTER			4D 4D				2	6 25	12 50					1	WHITE/RED
615 03	R6-1R	36	12	ONE WAY			4D				3	3 00	9 00					1	BLACK/WHITE
615 03	R6-1L	36	12	ONE WAY			4D				3	3 00	9 00					1	BLACK/WHITE
615 03	R7-8(1)	12	18	RESERVED PARKING			2C 2C	6x6	7 08x2		9	1 50	13 50					1	GREEN/BLUE/WHITE
615 06	R7-8(2)	12	18	RESERVED PARKING			2C 2C	6x6	7 08x2		9	1 50	13 50						GREEN/BLUE/WHITE, MOUNT WITH
615 06	R7-8a	18	9	VAN ACCESSIBLE			2D 1 5D				2	1 13	2 25						GREEN/WHITE, MOUNT WITH R7-8(1)
615 02	GA-01	60	12	All Traffic →	6D	6D			9x6		1	5 00	5 00					2	WHITE/GREEN

ITEM #	IDENT#	SIGN SIZE WIDTH (inch)	SIGN SIZE HEIGHT (inch)	TEXT	TEXT DIMENSIONS LETTER HEIGHT (inch) UC	LC	CAPS	SHIELD SIZE (inch)	ARROW (inch)	NUMERAL (inch)	# SIGNS REQ'D	SIGN AREA (SQ. FT.) NOM AREA	TOTAL AREA	POSTS PER SIGN BREAKAWAY	STEEL I-BEAM	CONCRETE BASE	4" OD ALUMINUM	U-CHANNEL-GALV	REMARKS
619 1	E5-3(M1)	36	36	EXIT →			6E		18X6		4	9 00	36 00						BLACK/ORANGE, MOUNT ON PORTABLE SIGN SUPPORTS AS NEEDED
619 1	E5-3(M2)	36	36	EXIT ←			6E		18X6		4	9 00	36 00						BLACK/ORANGE, MOUNT ON PORTABLE SIGN SUPPORTS AS NEEDED
619 1	E5-3(M3)	36	36	EXIT ↑			6E		6X9		4	9 00	36 00						BLACK/ORANGE, MOUNT ON PORTABLE SIGN SUPPORTS AS NEEDED

GENERAL NOTES

1 REFER TO THE 2010 STANDARD SPECIFICATIONS FOR ROAD AND BRIDGE CONSTRUCTION PUBLISHED BY THE NHDOT

2 NOTE NEW REFLECTIVITY REQUIREMENTS IN THE 2010 STANDARD SPECIFICATIONS FOR ROAD AND BRIDGE CONSTRUCTION SECTION 718 PUBLISHED BY THE NHDOT

3 REFER TO THE 2010 STANDARD PLANS FOR ROAD CONSTRUCTION AS PUBLISHED BY THE NHDOT FOR EXACT DETAILS OF PERMANENT SIGNING STANDARDS AND NHDOT SPECIFIC SIGNS

4 REFER TO THE LATEST EDITION OF THE STANDARD HIGHWAY SIGNS MANUAL AS PUBLISHED BY THE USDOT-FHWA FOR EXACT DETAILS OF BORDERS, ETC

74

STATE OF NEW HAMPSHIRE

DEPARTMENT OF TRANSPORTATION BUREAU OF HIGHWAY DESIGN

SIGN TEXT LAYOUT

EXCEL FILE NAME	STATE PROJECT NO	FEDERAL PROJECT NO	SHEET NO	TOTAL SHEETS
S:\ProjectDevelopment\Forms\Project\sgntxt-1 xls	20222B	X-A004 (090)	14	42

REVISIONS AFTER PROPOSAL

NUMBER	DATE	STATION	STATION	DESCRIPTION

SDR PROCESSED DATE

NEW DESIGN TOP DATE 6/11/14

SHEET CHECKED CAC DATE 6/11/14

AS BUILT DETAILS DATE

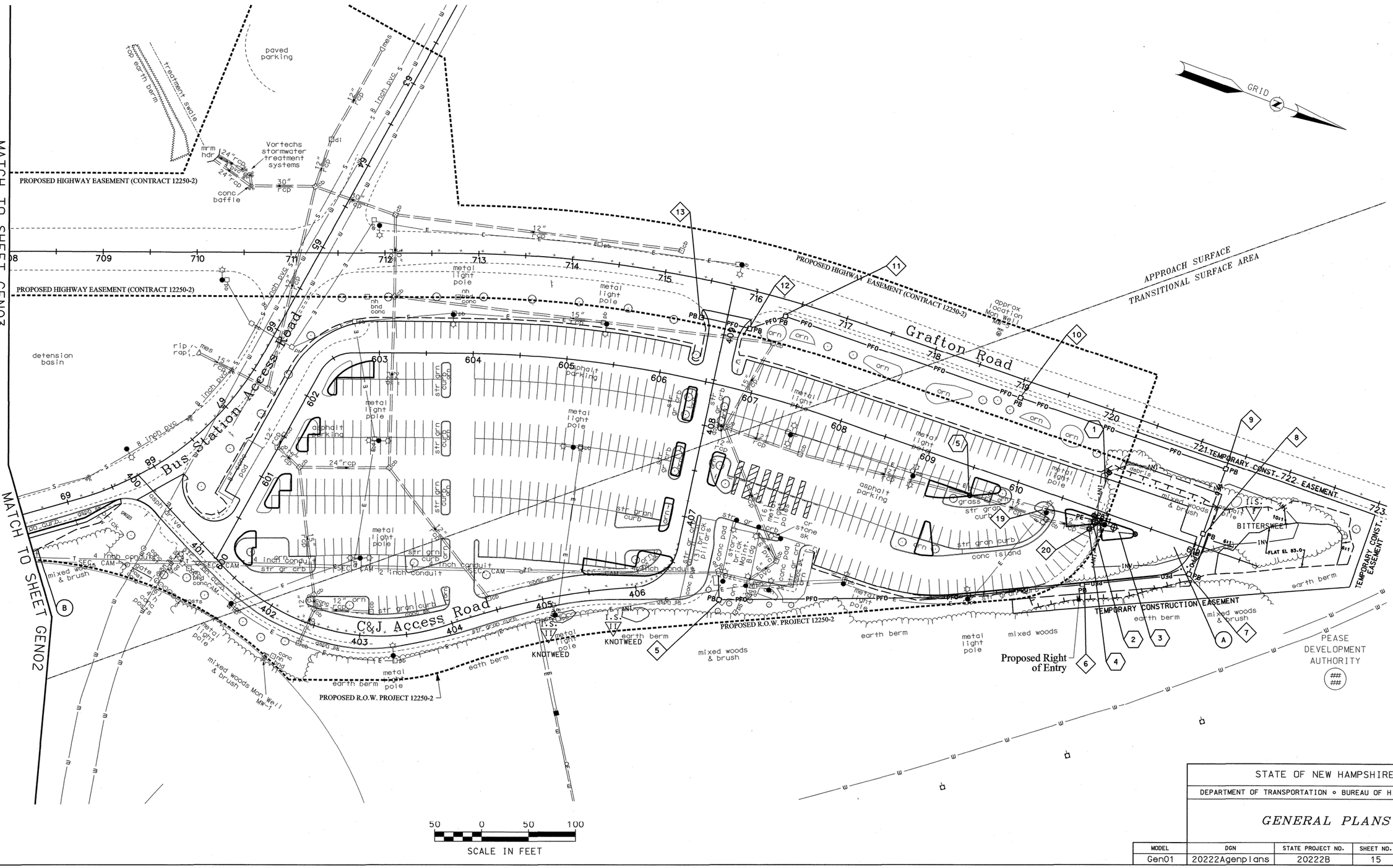

NUMBER	DATE	STATION	STATION	DESCRIPTION

REVISIONS AFTER PROPOSAL

	NAME1	DATE	DATE1
SDR PROCESSED		DATE	
NEW DESIGN	CLB	DATE	6/2014
SHEET CHECKED	CAC	DATE	6/16/2014
AS BUILT DETAILS		DATE	

STATE OF NEW HAMPSHIRE

DEPARTMENT OF TRANSPORTATION ∘ BUREAU OF HIGHWAY DESIGN

GENERAL PLANS

MODEL	DGN	STATE PROJECT NO.	SHEET NO.	TOTAL SHEETS
Gen01	20222Agenplans	20222B	15	42

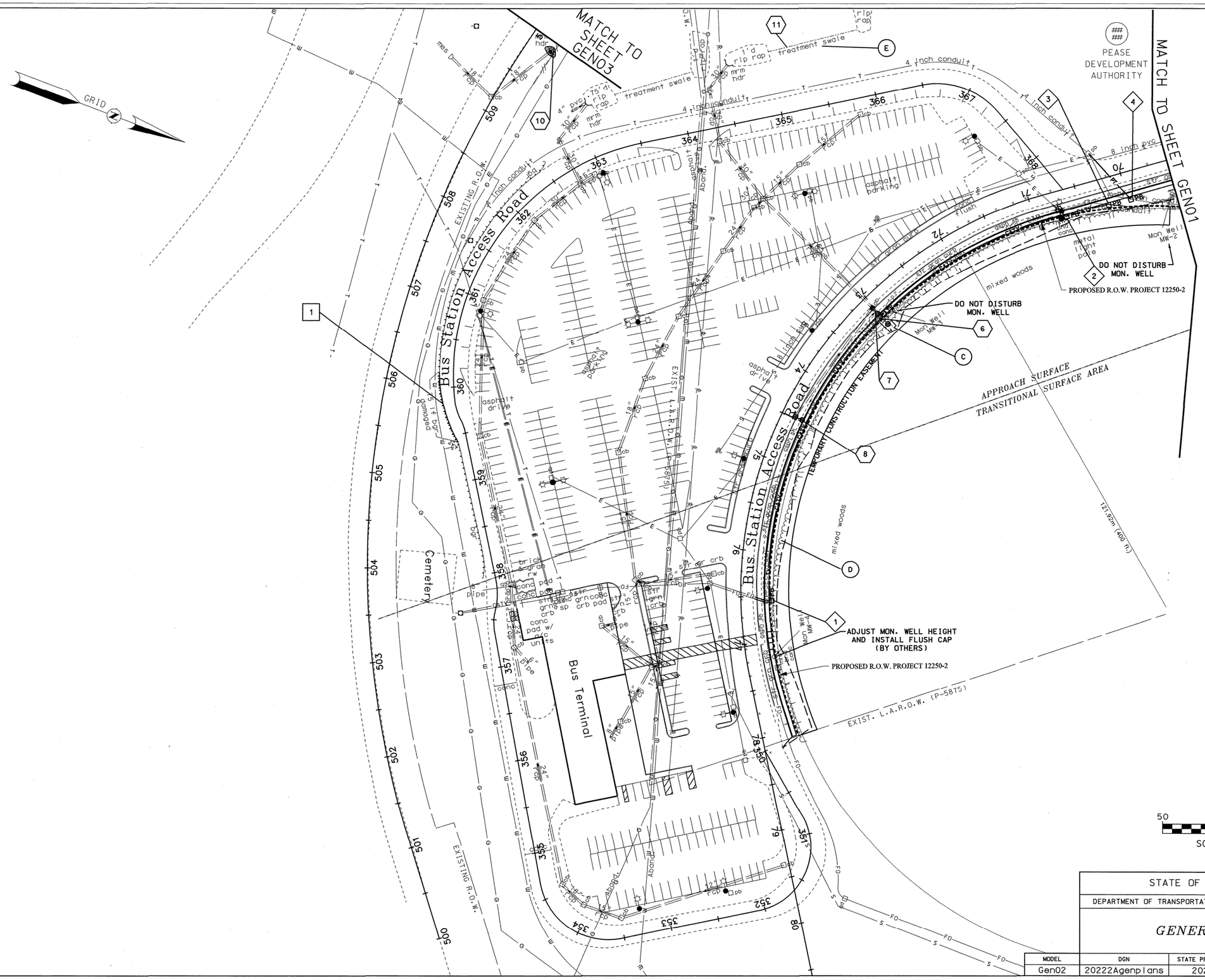

REVISIONS AFTER PROPOSAL			
STATION	STATION	DESCRIPTION	

NUMBER	DATE

SDR PROCESSED	NAME1	DATE	DATE1
NEW DESIGN	CLB	DATE	6/2014
SHEET CHECKED	CAC	DATE	6/16/2014
AS BUILT DETAILS		DATE	

STATE OF NEW HAMPSHIRE

DEPARTMENT OF TRANSPORTATION • BUREAU OF HIGHWAY DESIGN

GENERAL PLANS

MODEL	DGN	STATE PROJECT NO.	SHEET NO.	TOTAL SHEETS
Gen02	20222Agenplans	20222B	16	42

REVISIONS AFTER PROPOSAL

NUMBER	DATE	STATION	STATION	DESCRIPTION

	NAME1	DATE	DATE1
SDR PROCESSED			
NEW DESIGN	CLB	DATE	6/2014
SHEET CHECKED	CAC	DATE	6/16/2014
AS BUILT DETAILS		DATE	

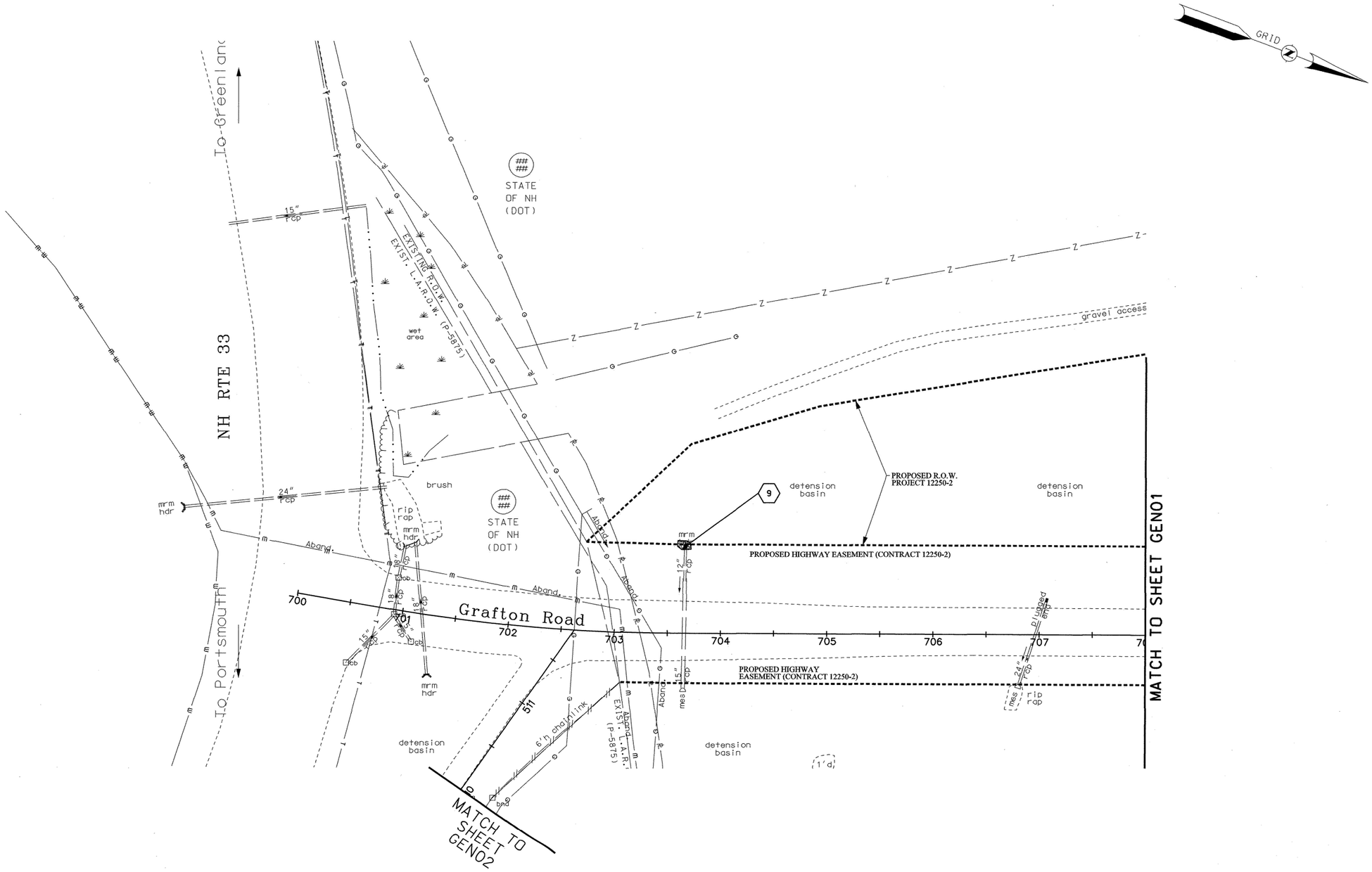

50 0 50 100
SCALE IN FEET

STATE OF NEW HAMPSHIRE

DEPARTMENT OF TRANSPORTATION • BUREAU OF HIGHWAY DESIGN

GENERAL PLANS

MODEL	DGN	STATE PROJECT NO.	SHEET NO.	TOTAL SHEETS
Gen03	20222Agenplans	20222B	17	42

MC1M Curve No. 1

PI= 67+66.24
N = 205684.49
E = 1213995.81
Δ = 45°-20′-15.2″ RT
T = 137.03′
R = 328.08′
L = 259.61′
E = 27.47′

MC3M Curve No. 1

PI= 602+53.04
N = 205771.84
E = 1213834.95
Δ = 61°-19′-25.8″ RT
T = 23.34′
R = 39.37′
L = 42.14′
E = 6.40′

MC3M Curve No. 2

PI= 605+85.41
N = 206088.27
E = 1213719.27
Δ = 19°-02′-24.4″ RT
T = 202.20′
R = 1205.71′
L = 400.67′
E = 16.84′

MC6M Curve No. 2

PI= 714+97.94
N = 206068.44
E = 1213612.98
Δ = 19°-02′-26.5″ RT
T = 220.09′
R = 1312.34′
L = 436.12′
E = 18.33′

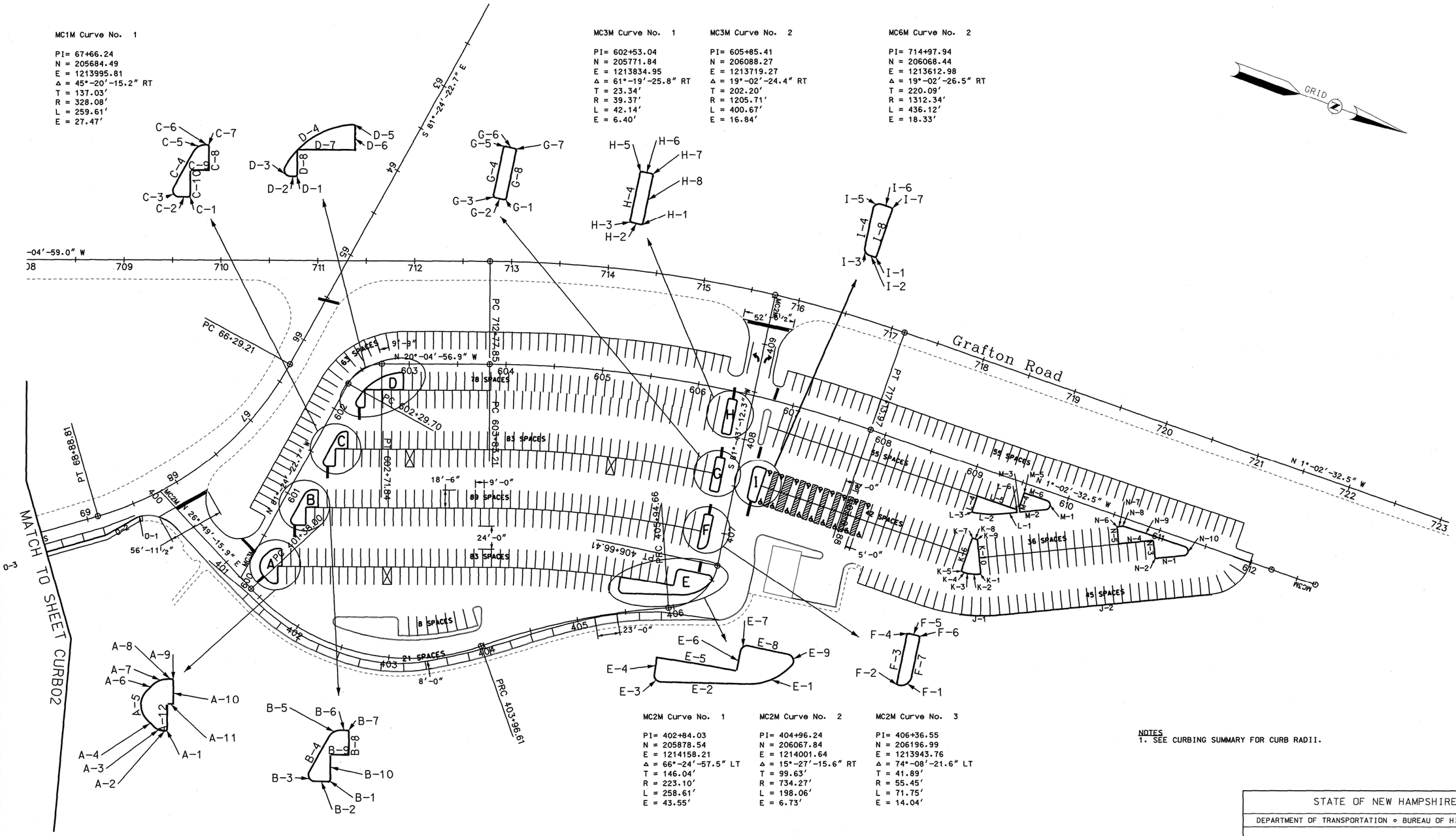

MC2M Curve No. 1

PI= 402+84.03
N = 205878.54
E = 1214158.21
Δ = 66°-24′-57.5″ LT
T = 146.04′
R = 223.10′
L = 258.61′
E = 43.55′

MC2M Curve No. 2

PI= 404+96.24
N = 206067.84
E = 1214001.64
Δ = 15°-27′-15.6″ RT
T = 99.63′
R = 734.27′
L = 198.06′
E = 6.73′

MC2M Curve No. 3

PI= 406+36.55
N = 206196.99
E = 1213943.76
Δ = 74°-08′-21.6″ LT
T = 41.89′
R = 55.45′
L = 71.75′
E = 14.04′

NOTES
1. SEE CURBING SUMMARY FOR CURB RADII.

50 0 50 100
SCALE IN FEET

REVISIONS AFTER PROPOSAL			
STATION	NUMBER	DATE	DESCRIPTION

SDR PROCESSED	NAME1	DATE	DATE1
NEW DESIGN	CLB	DATE 6/2014	
SHEET CHECKED	CAC	DATE 6/16/2014	
AS BUILT DETAILS		DATE	

STATE OF NEW HAMPSHIRE

DEPARTMENT OF TRANSPORTATION • BUREAU OF HIGHWAY DESIGN

CURBING AND PAVEMENT LAYOUT PLANS

MODEL	DGN	STATE PROJECT NO.	SHEET NO.	TOTAL SHEETS
Curb01	20222Acurbplans	20222B	18	42

urbplans.dgn 6/17/2014 9:33:22 AM "n34clb"

MC4M Curve No. 1

PI= 351+72.03
N = 205478.00
E = 1214950.05
Δ = 107°-48′-07.7″ RT
T = 93.36′
R = 68.08′
L = 128.09′
E = 47.47′

MC4M Curve No. 2

PI= 354+26.38
N = 205212.62
E = 1215116.00
Δ = 91°-28′-09.4″ RT
T = 74.05′
R = 72.18′
L = 115.23′
E = 31.23′

MC4M Curve No. 3

PI= 357+47.84
N = 205032.51
E = 1214810.85
Δ = 23°-54′-37.1″ RT
T = 11.81′
R = 55.77′
L = 23.28′
E = 1.24′

MC4M Curve No. 4

PI= 357+76.30
N = 205029.18
E = 1214782.24
Δ = 25°-22′-46.5″ LT
T = 16.99′
R = 75.46′
L = 33.43′
E = 1.89′

MC4M Curve No. 5

PI= 359+58.04
N = 204932.53
E = 1214627.68
Δ = 16°-45′-58.8″ LT
T = 7.25′
R = 49.21′
L = 14.40′
E = 0.53′

MC4M Curve No. 6

PI= 359+74.62
N = 204919.97
E = 1214616.69
Δ = 21°-42′-20.6″ RT
T = 9.43′
R = 49.21′
L = 18.64′
E = 0.90′

MC4M Curve No. 7

PI= 362+11.05
N = 204812.24
E = 1214405.98
Δ = 85°-03′-38.2″ RT
T = 227.22′
R = 247.70′
L = 367.74′
E = 88.43′

MC4M Curve No. 8

PI= 366+98.37
N = 205298.94
E = 1214101.62
Δ = 61°-50′-23.4″ RT
T = 50.11′
R = 83.66′
L = 90.30′
E = 13.86′

MC5M Curve No. 1

PI= 505+93.37
N = 204736.54
E = 1214671.49
Δ = 52°-18′-45.9″ RT
T = 483.38′
R = 984.25′
L = 898.65′
E = 112.29′

MC1M Curve No. 2

PI= 74+87.24
N = 205090.01
E = 1214428.81
Δ = 85°-57′-03.1″ LT
T = 402.58′
R = 432.09′
L = 648.18′
E = 158.48′

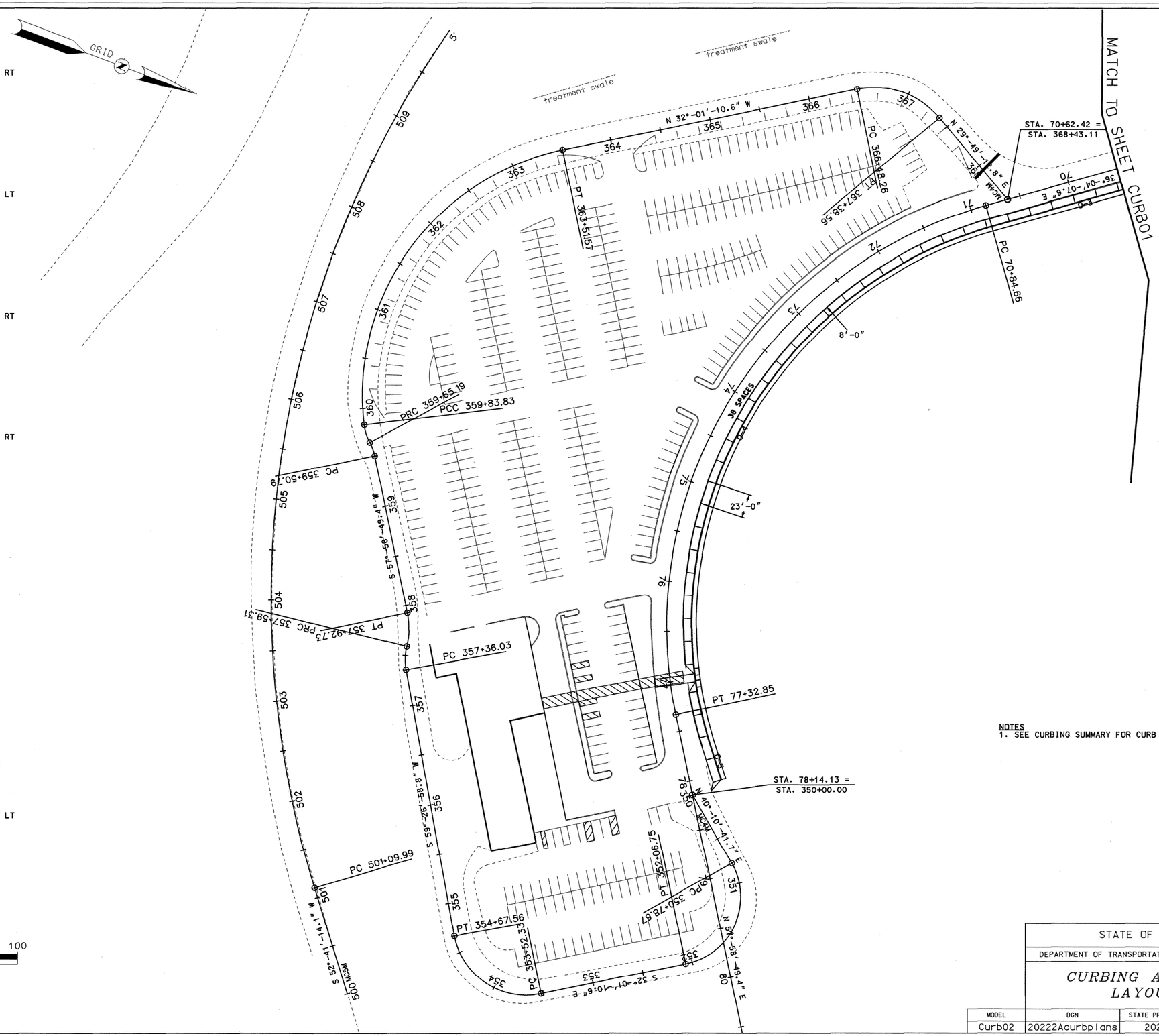

NOTES
1. SEE CURBING SUMMARY FOR CURB RADII.

50 0 50 100
SCALE IN FEET

REVISIONS AFTER PROPOSAL

NUMBER	DATE	STATION	STATION	DESCRIPTION

SDR PROCESSED	NAME1	DATE	DATE1
NEW DESIGN	CLB	DATE	6/2014
SHEET CHECKED	CAC	DATE	6/16/2014
AS BUILT DETAILS		DATE	

STATE OF NEW HAMPSHIRE

DEPARTMENT OF TRANSPORTATION ∘ BUREAU OF HIGHWAY DESIGN

CURBING AND PAVEMENT LAYOUT PLANS

MODEL	DGN	STATE PROJECT NO.	SHEET NO.	TOTAL SHEETS
Curb02	20222Acurbplans	20222B	19	42

REVISIONS AFTER PROPOSAL

NUMBER	DATE	STATION	STATION	DESCRIPTION

SDR PROCESSED	NAME:	DATE	DATE:
NEW DESIGN	CLB	DATE	6/2014
SHEET CHECKED	CAC	DATE	6/16/2014
AS BUILT DETAILS		DATE	

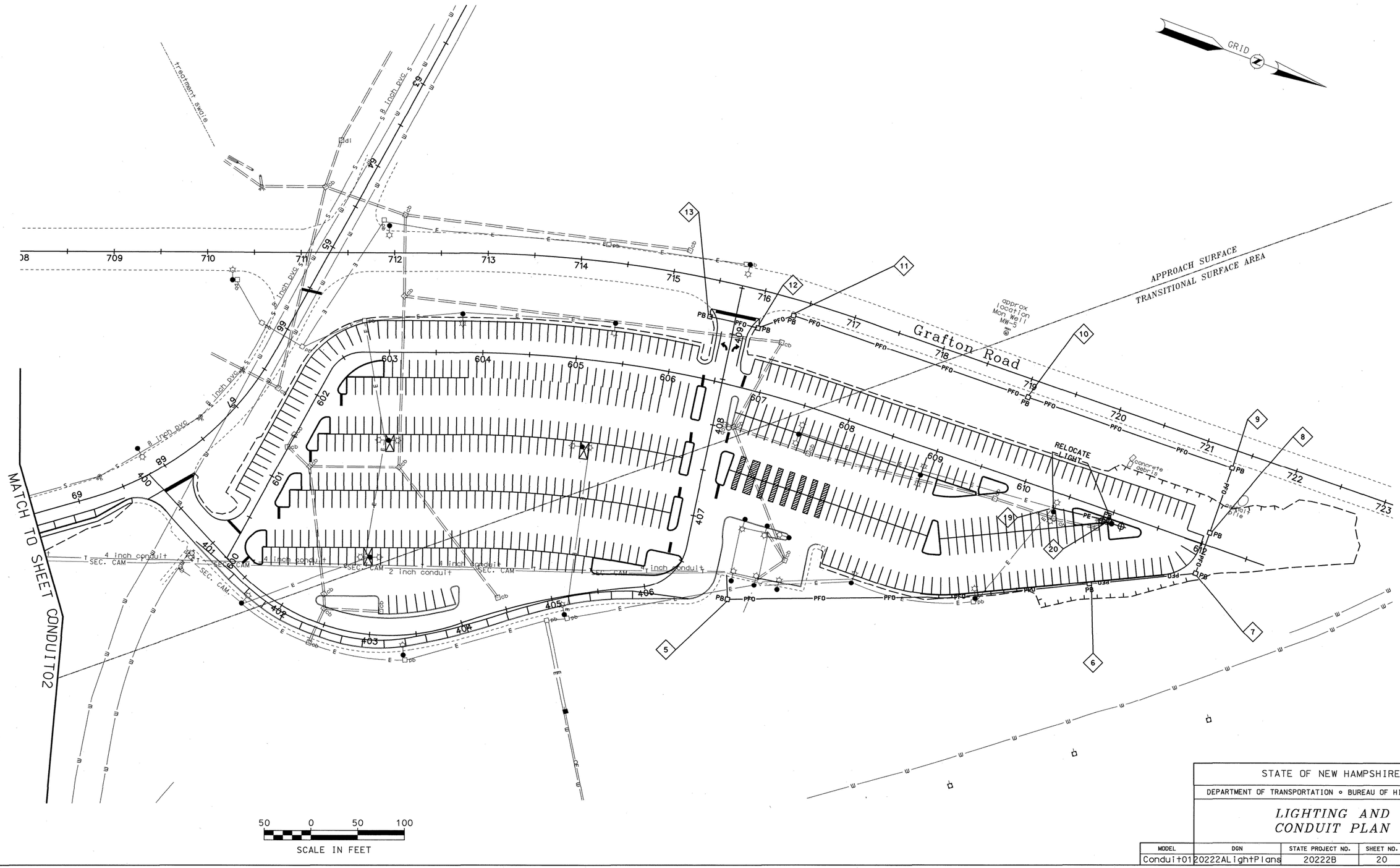

STATE OF NEW HAMPSHIRE

DEPARTMENT OF TRANSPORTATION • BUREAU OF HIGHWAY DESIGN

LIGHTING AND CONDUIT PLAN

MODEL	DGN	STATE PROJECT NO.	SHEET NO.	TOTAL SHEETS
Conduit01	20222ALightPlans	20222B	20	42

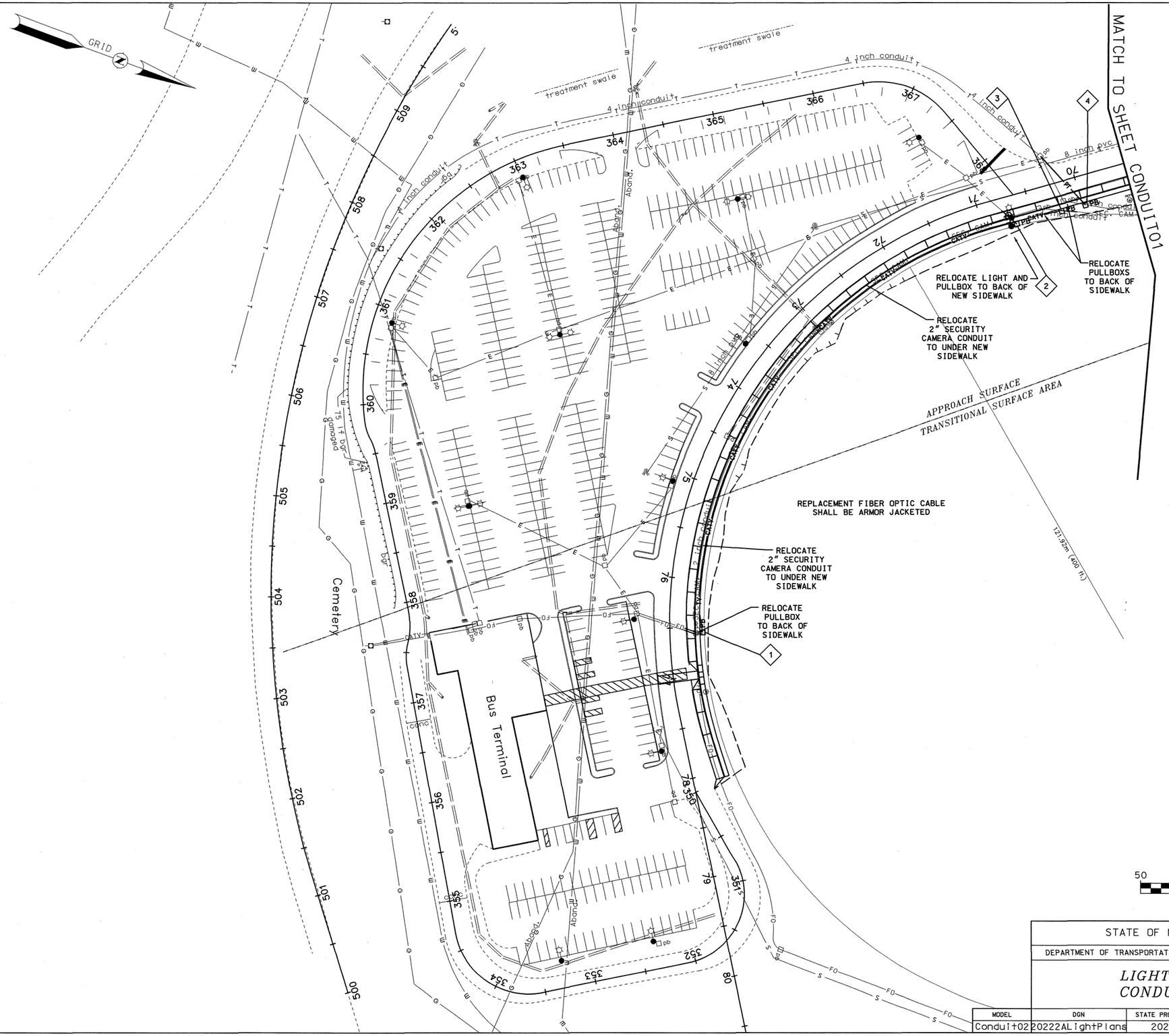

REVISIONS AFTER PROPOSAL				
NUMBER	DATE	STATION	STATION	DESCRIPTION

SDR PROCESSED	NAME1	DATE	DATE1
NEW DESIGN	CLB	DATE	6/2014
SHEET CHECKED	CAC	DATE	6/16/2014
AS BUILT DETAILS		DATE	

STATE OF NEW HAMPSHIRE

DEPARTMENT OF TRANSPORTATION • BUREAU OF HIGHWAY DESIGN

LIGHTING AND CONDUIT PLAN

MODEL	DGN	STATE PROJECT NO.	SHEET NO.	TOTAL SHEETS
Conduit02	20222ALightPlans	20222B	21	42

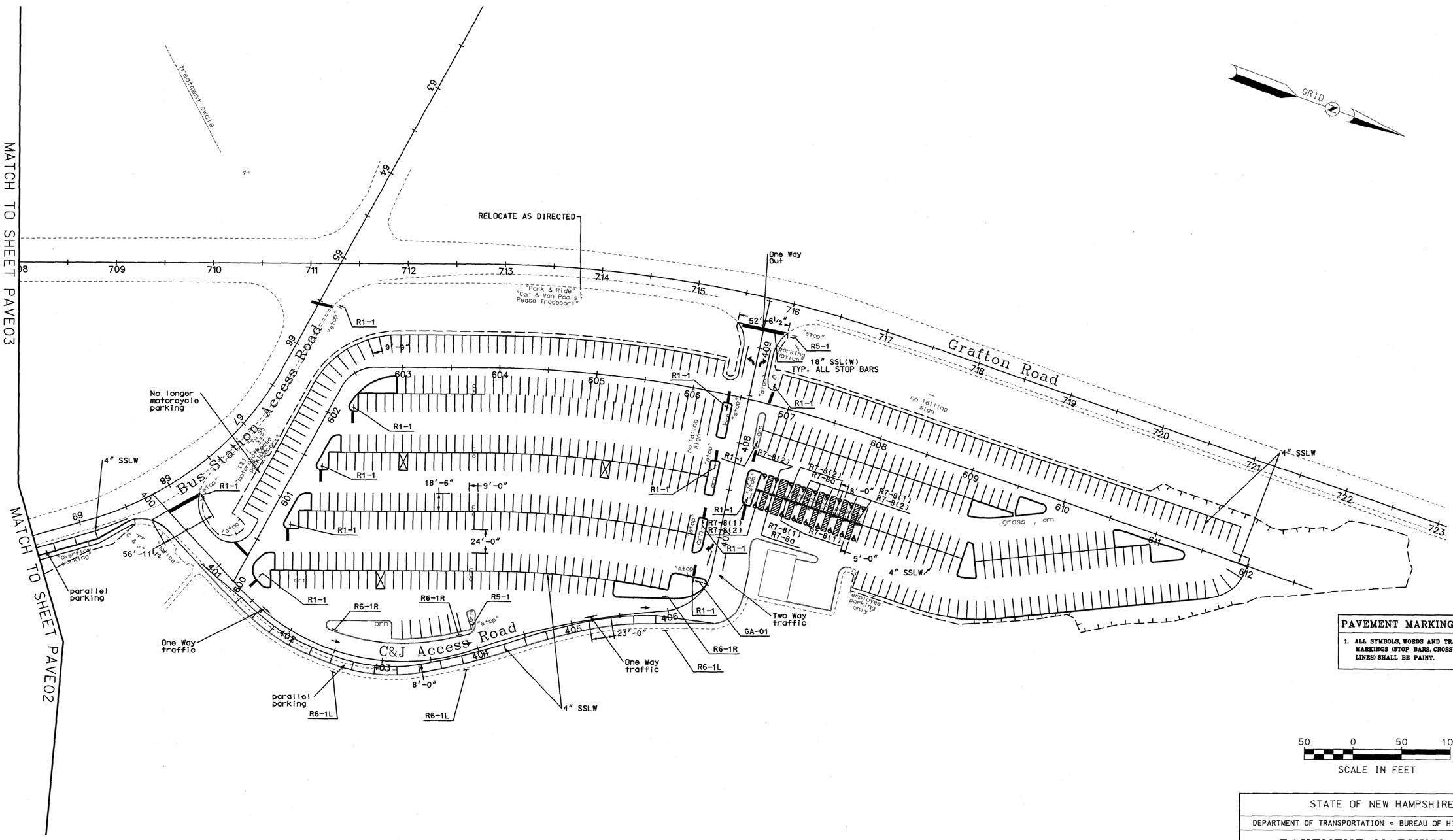

PAVEMENT MARKING NOTE

1. ALL SYMBOLS, WORDS AND TRANSVERSE MARKINGS (STOP BARS, CROSSWALK LINES) SHALL BE PAINT.

REVISIONS AFTER PROPOSAL			
NUMBER	DATE	STATION	STATION	DESCRIPTION

SDR PROCESSED	NAME1	DATE	DATE1
NEW DESIGN	CLB	DATE	6/2014
SHEET CHECKED	CAC	DATE	6/16/2014
AS BUILT DETAILS		DATE	

STATE OF NEW HAMPSHIRE

DEPARTMENT OF TRANSPORTATION • BUREAU OF HIGHWAY DESIGN

PAVEMENT MARKING AND SIGNING PLANS

MODEL	DGN	STATE PROJECT NO.	SHEET NO.	TOTAL SHEETS
Pave01	20222Asgnpvtplans	20222B	22	42

sgnpvtplans.dgn 6/16/2014 2:56:04 PM "n34c1b"

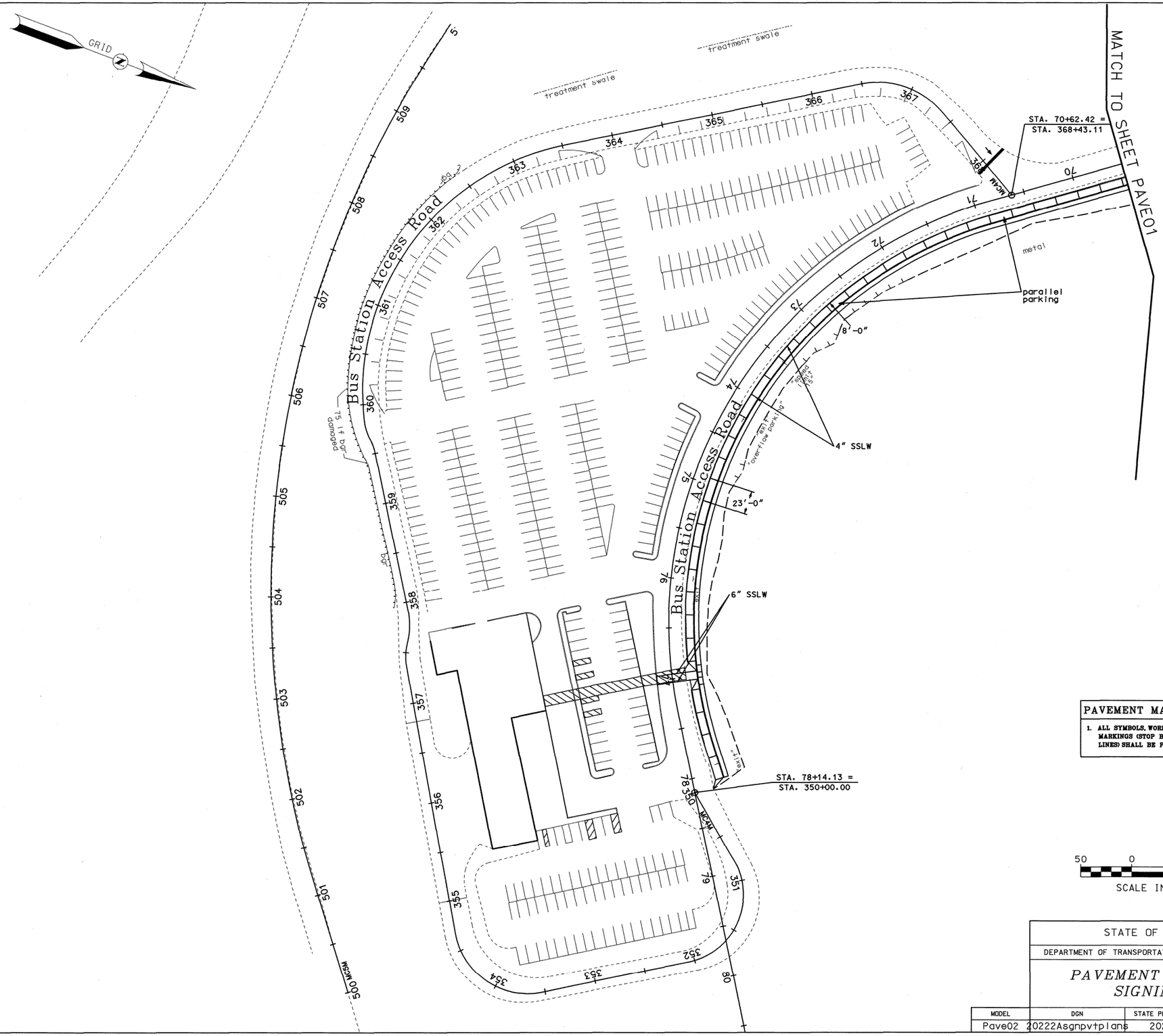

PAVEMENT MARKING NOTE

1. ALL SYMBOLS, WORDS AND TRANSVERSE MARKINGS (STOP BARS, CROSSWALK LINES) SHALL BE PAINT.

50 0 50 100

SCALE IN FEET

STATE OF NEW HAMPSHIRE

DEPARTMENT OF TRANSPORTATION • BUREAU OF HIGHWAY DESIGN

PAVEMENT MARKING AND SIGNING PLANS

MODEL	DGN	STATE PROJECT NO.	SHEET NO.	TOTAL SHEETS
Pave02	20222Asgnpvtplans	20222B	23	42

REVISIONS AFTER PROPOSAL

NUMBER	DATE	STATION	STATION	DESCRIPTION

	NAME1	DATE	DATE1
SDR PROCESSED			
NEW DESIGN	CLB	DATE	6/2014
SHEET CHECKED	CAC	DATE	6/16/2014

AS BUILT DETAILS DATE

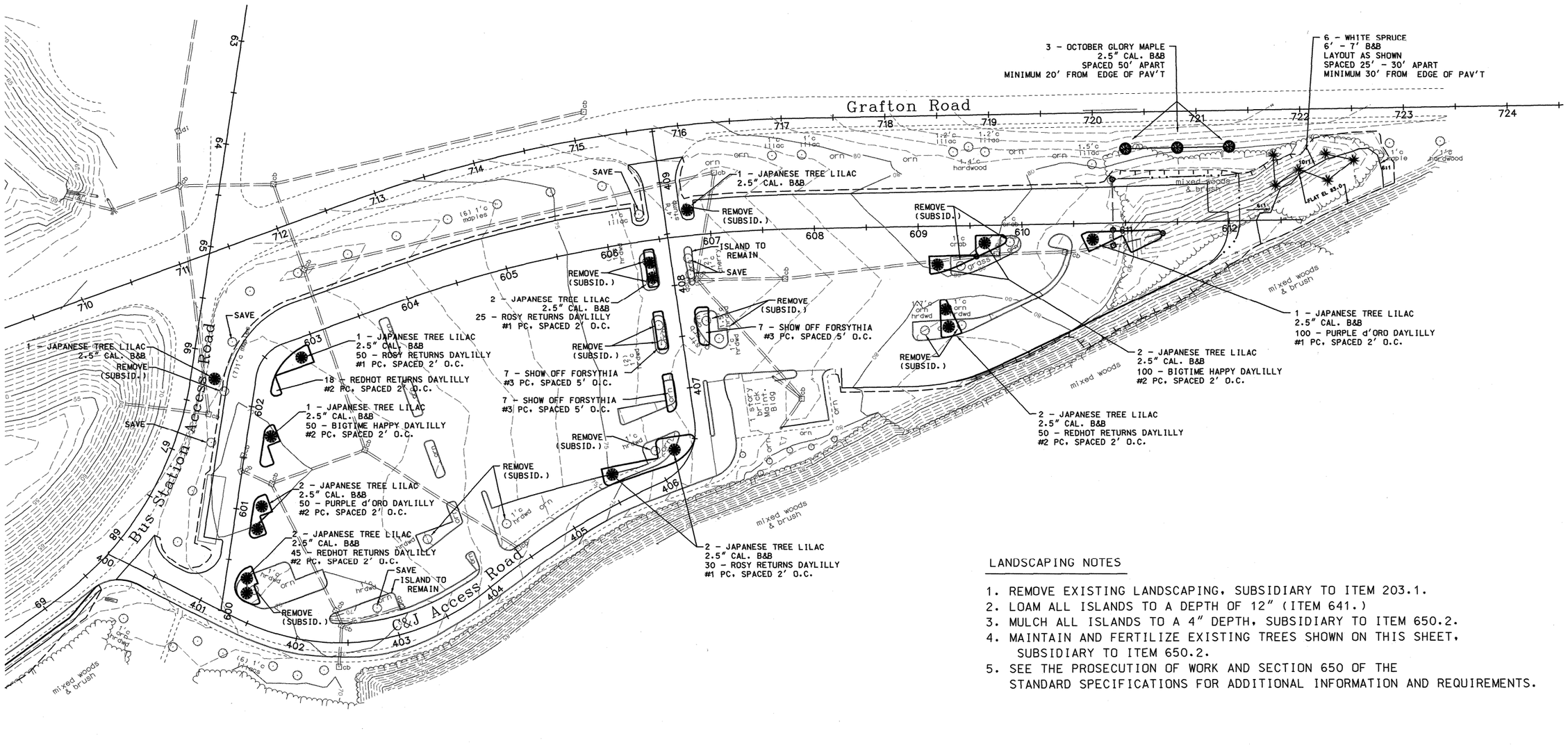

LANDSCAPING NOTES

1. REMOVE EXISTING LANDSCAPING, SUBSIDIARY TO ITEM 203.1.
2. LOAM ALL ISLANDS TO A DEPTH OF 12" (ITEM 641.)
3. MULCH ALL ISLANDS TO A 4" DEPTH, SUBSIDIARY TO ITEM 650.2.
4. MAINTAIN AND FERTILIZE EXISTING TREES SHOWN ON THIS SHEET, SUBSIDIARY TO ITEM 650.2.
5. SEE THE PROSECUTION OF WORK AND SECTION 650 OF THE STANDARD SPECIFICATIONS FOR ADDITIONAL INFORMATION AND REQUIREMENTS.

CONTOUR INTERVAL = 1 FOOT

50 0 50 100
SCALE IN FEET

REVISIONS AFTER PROPOSAL				
STATION	STATION	DATE	NUMBER	DESCRIPTION

SDR PROCESSED		DATE
NEW DESIGN	BLR	DATE 6/10/14
SHEET CHECKED	CAC	DATE 6/13/14

AS BUILT DETAILS DATE

STATE OF NEW HAMPSHIRE

DEPARTMENT OF TRANSPORTATION • BUREAU OF HIGHWAY DESIGN

LANDSCAPING AND CONTOUR PLAN

DGN	STATE PROJECT NO.	SHEET NO.	TOTAL SHEETS
20222Alandplans	20222B	24	42

Alandplans.dgn 6/17/2014 9:38:58 AM "n34c1b"

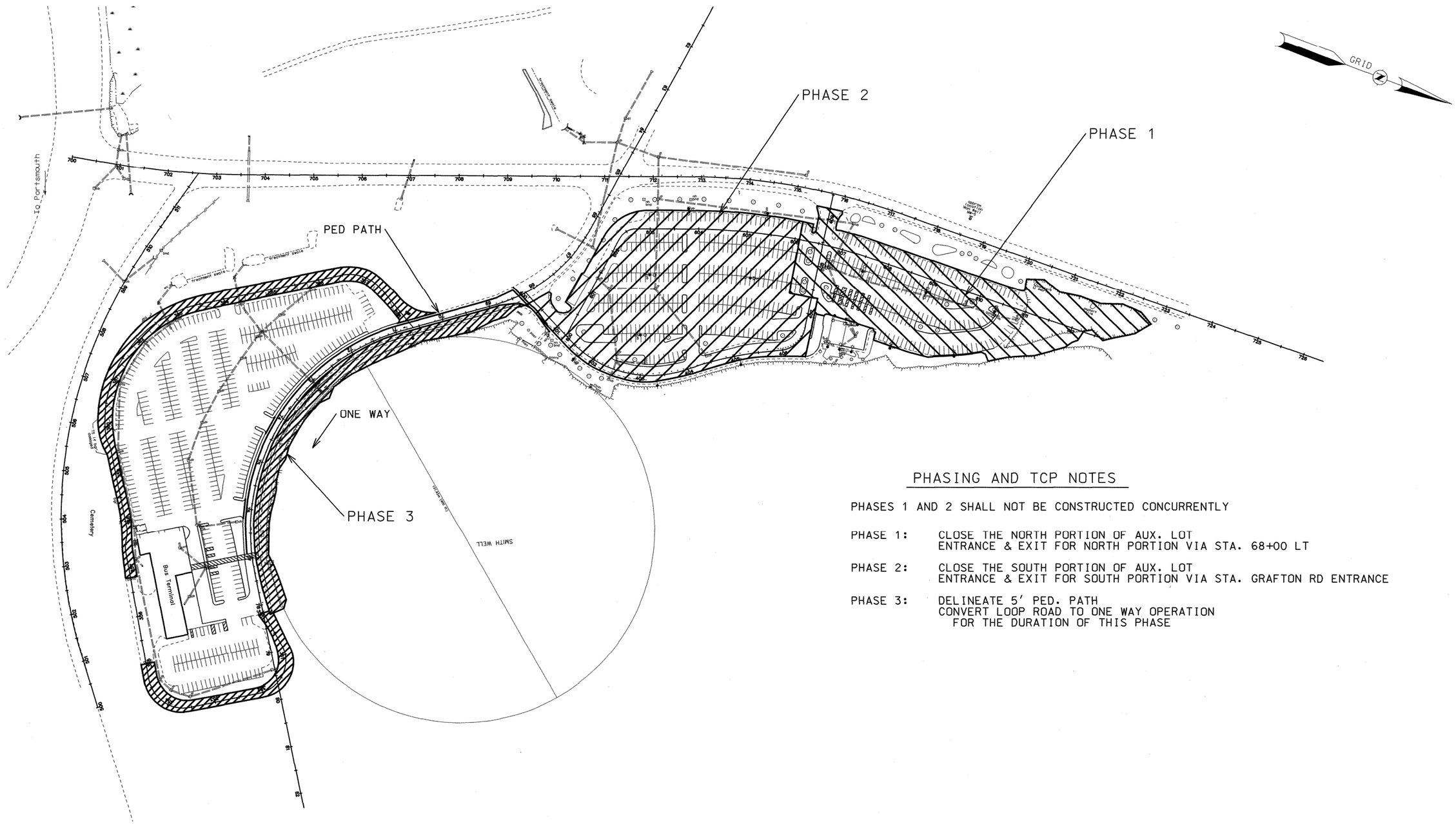

PHASING AND TCP NOTES

PHASES 1 AND 2 SHALL NOT BE CONSTRUCTED CONCURRENTLY

PHASE 1: CLOSE THE NORTH PORTION OF AUX. LOT
ENTRANCE & EXIT FOR NORTH PORTION VIA STA. 68+00 LT

PHASE 2: CLOSE THE SOUTH PORTION OF AUX. LOT
ENTRANCE & EXIT FOR SOUTH PORTION VIA STA. GRAFTON RD ENTRANCE

PHASE 3: DELINEATE 5' PED. PATH
CONVERT LOOP ROAD TO ONE WAY OPERATION
FOR THE DURATION OF THIS PHASE

50 0 50 100
SCALE IN FEET

STATE OF NEW HAMPSHIRE
DEPARTMENT OF TRANSPORTATION • BUREAU OF HIGHWAY DESIGN

TRAFFIC CONTROL PLANS OVERVIEW

MODEL	DGN	STATE PROJECT NO.	SHEET NO.	TOTAL SHEETS
TCP	20222ATrafConPlans	20222B	25	42

REVISIONS AFTER PROPOSAL

NUMBER	DATE	STATION	STATION	DESCRIPTION

SDR PROCESSED	NAME1	DATE	DATE1
NEW DESIGN	CLB	DATE	6/2014
SHEET CHECKED	CAC	DATE	6/16/2014
AS BUILT DETAILS		DATE	

J:\trafcon\plans.dgn 6/17/2014 9:40:26 AM "n34clb"

SDR PROCESSED	CLB/WED	DATE	4/2014
NEW DESIGN	CLB/CAC	DATE	6/2014
SHEET CHECKED	CAC	DATE	6/16/2014
AS BUILT DETAILS		DATE	

REVISIONS AFTER PROPOSAL

NUMBER	DATE	STATION	STATION	DESCRIPTION

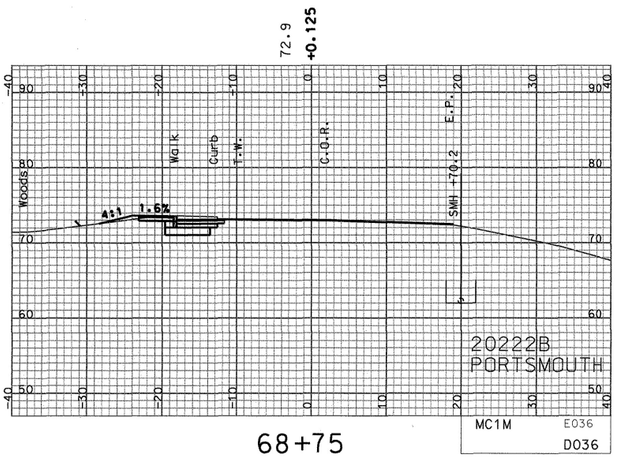

68+75

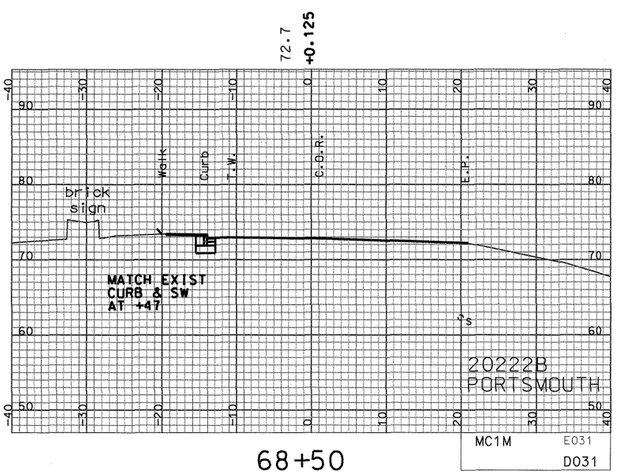

68+50

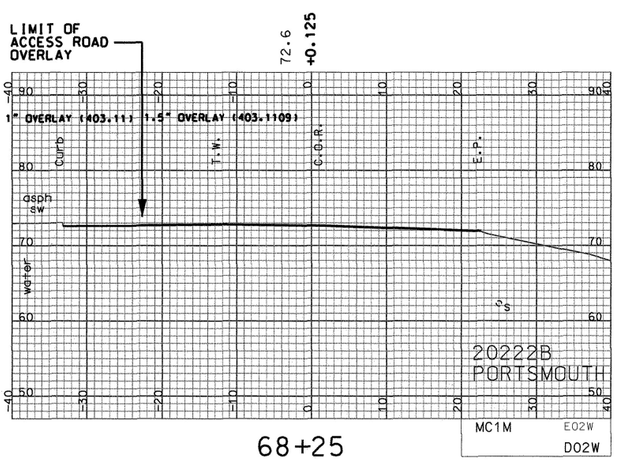

68+25

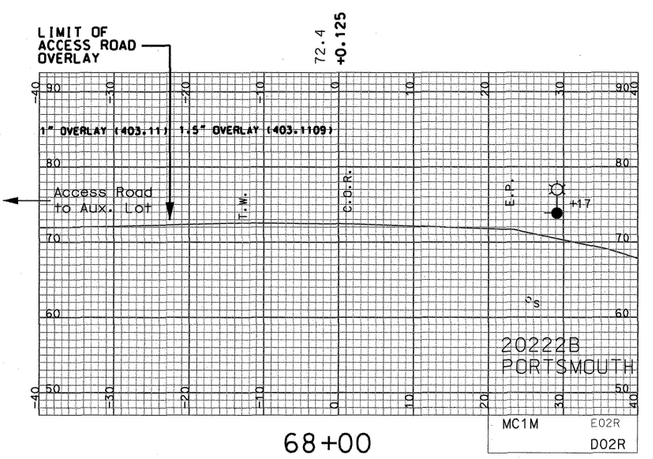

68+00

SHEET TOTALS

COMMON EXCAV.	30.75 C.Y.	ROCK EXCAV.	– C.Y.
FILL	4.85 C.Y.	MUCK EXCAV.	– C.Y.

DGN	STATE PROJECT NO.	SHEET NO.	TOTAL SHEETS
20222axs_mc1m_6550-7800	20222B	26	42

SDR PROCESSED	CLB/WED	DATE	4/2014
NEW DESIGN	CLB/CAC	DATE	6/2014
SHEET CHECKED	CAC	DATE	6/16/2014
AS BUILT DETAILS		DATE	

REVISIONS AFTER PROPOSAL

NUMBER	DATE	STATION	STATION	DESCRIPTION

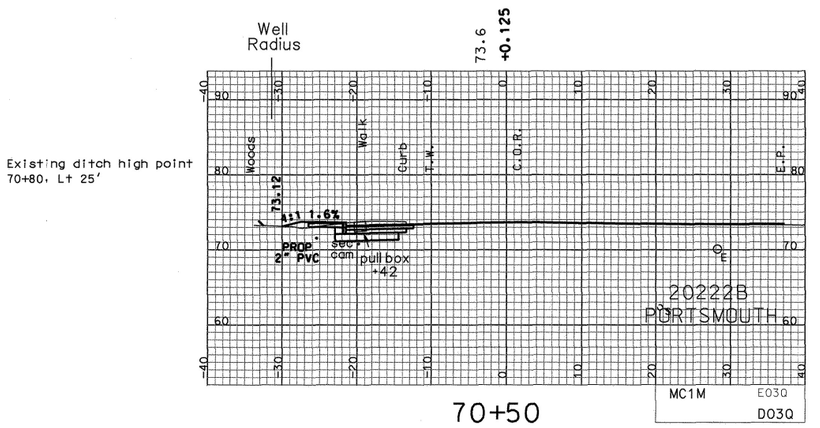

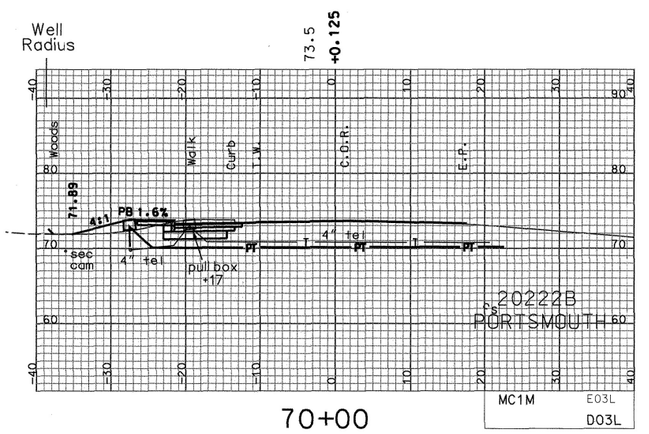

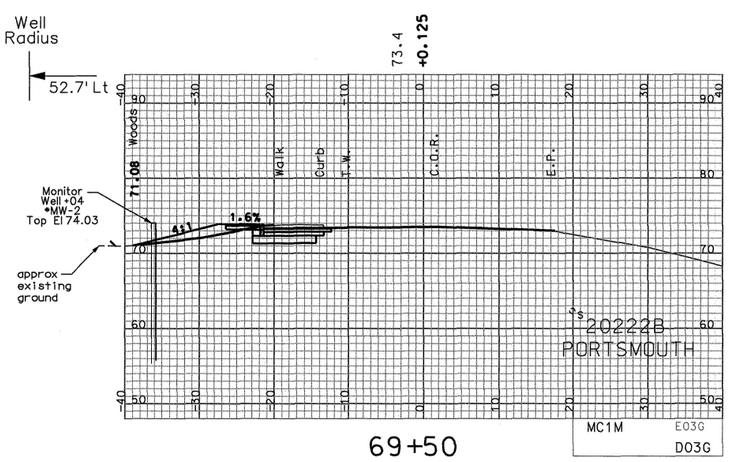

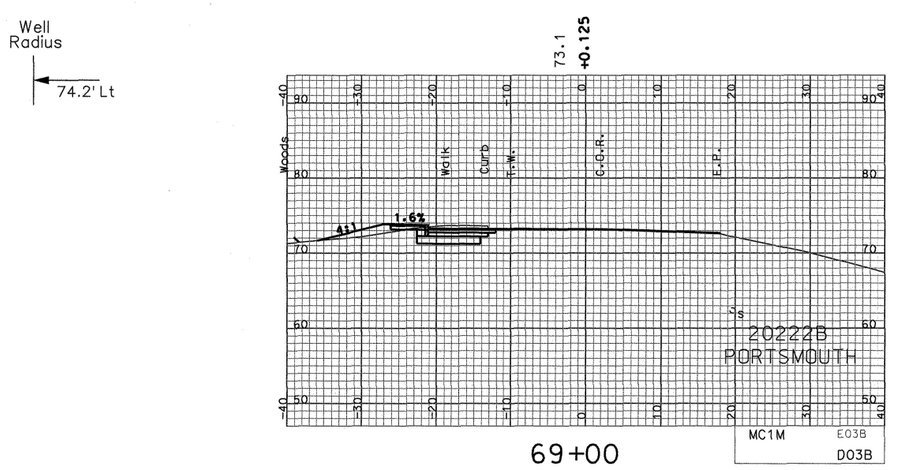

SHEET TOTALS

COMMON EXCAV.	174.63 C.Y.	ROCK EXCAV.	– C.Y.
FILL	49.49 C.Y.	MUCK EXCAV.	– C.Y.

DGN	STATE PROJECT NO.	SHEET NO.	TOTAL SHEETS
20222axs_mc1m_6550-7800	20222B	27	42

axs_mc1m_6550-7800.dgn 6/16/2014 2:39:33 PM "n34cnc"

SDR PROCESSED	CLB/WED	DATE	4/2014
NEW DESIGN	CLB/CAC	DATE	6/2014
SHEET CHECKED	CAC	DATE	6/16/2014
AS BUILT DETAILS		DATE	

REVISIONS AFTER PROPOSAL

NUMBER	DATE	STATION	STATION	DESCRIPTION

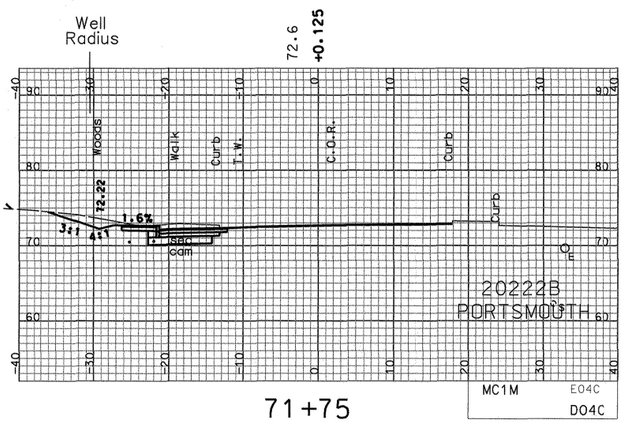

71+75

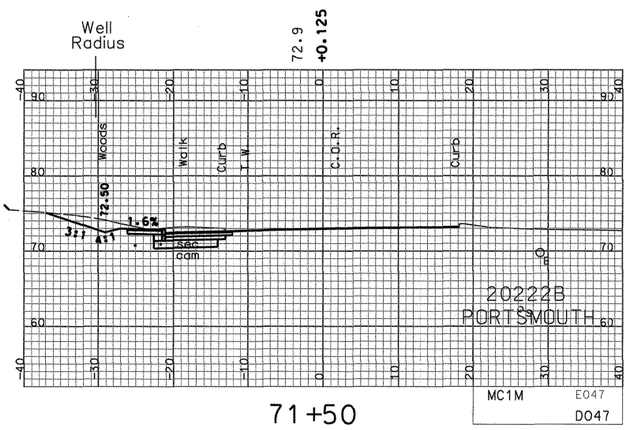

71+50

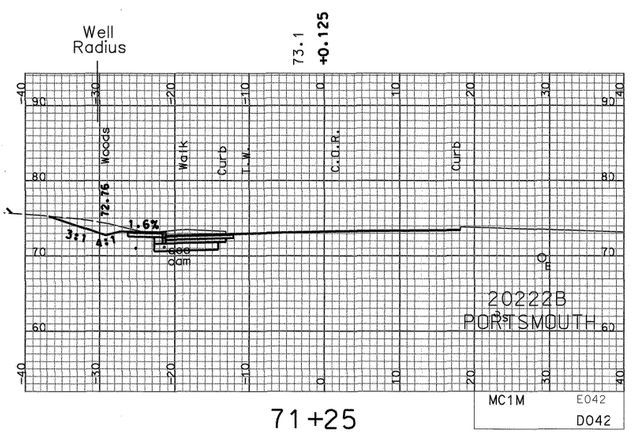

71+25

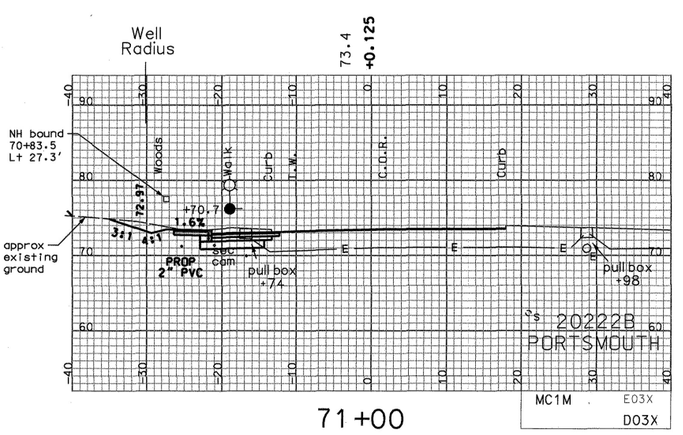

71+00

SHEET TOTALS

COMMON EXCAV.	128.11 C.Y.	ROCK EXCAV.	– C.Y.
FILL	0.00 C.Y.	MUCK EXCAV.	– C.Y.

DGN	STATE PROJECT NO.	SHEET NO.	TOTAL SHEETS
20222axs_mc1m_6550-7800	20222B	28	42

SDR PROCESSED	CLB/WED	DATE	4/2014
NEW DESIGN	CLB/CAC	DATE	6/2014
SHEET CHECKED	CAC	DATE	6/16/2014
AS BUILT DETAILS		DATE	

REVISIONS AFTER PROPOSAL

NUMBER	DATE	STATION	STATION	DESCRIPTION

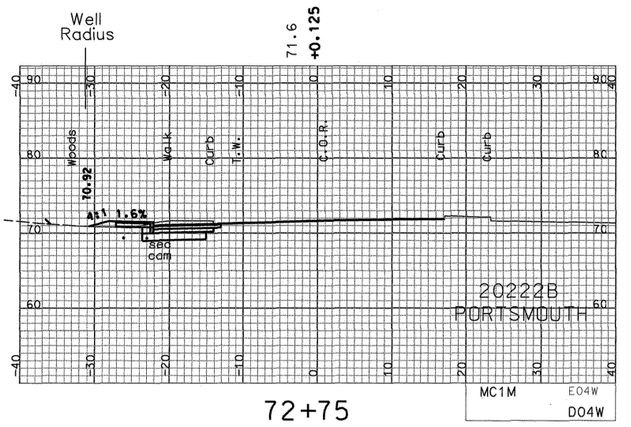

72+75

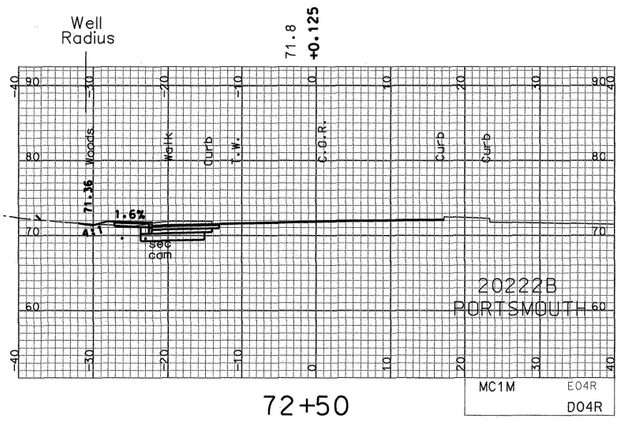

72+50

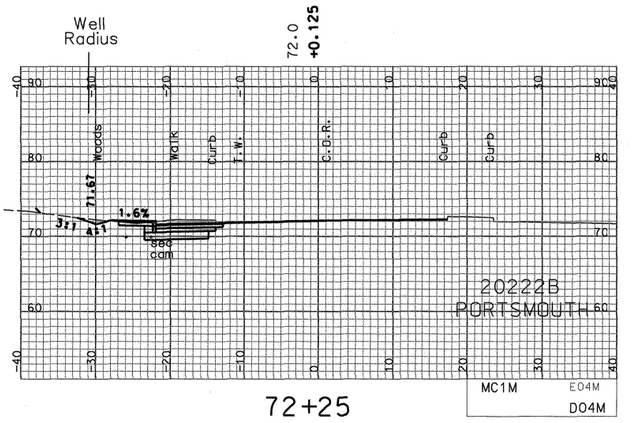

72+25

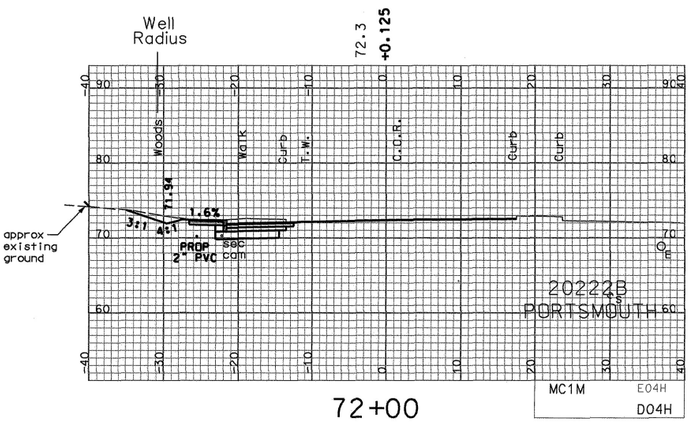

72+00

SHEET TOTALS			
COMMON EXCAV. 96.66 C.Y.		ROCK EXCAV. – C.Y.	
FILL 7.92 C.Y.		MUCK EXCAV. – C.Y.	
DGN	STATE PROJECT NO.	SHEET NO.	TOTAL SHEETS
22axs_mc1m_6550-7800	20222B	29	42

SDR PROCESSED	CLB/WED	DATE	4/2014
NEW DESIGN	CLB/CAC	DATE	6/2014
SHEET CHECKED	CAC	DATE	6/16/2014
AS BUILT DETAILS		DATE	

REVISIONS AFTER PROPOSAL

NUMBER	DATE	STATION	STATION	DESCRIPTION

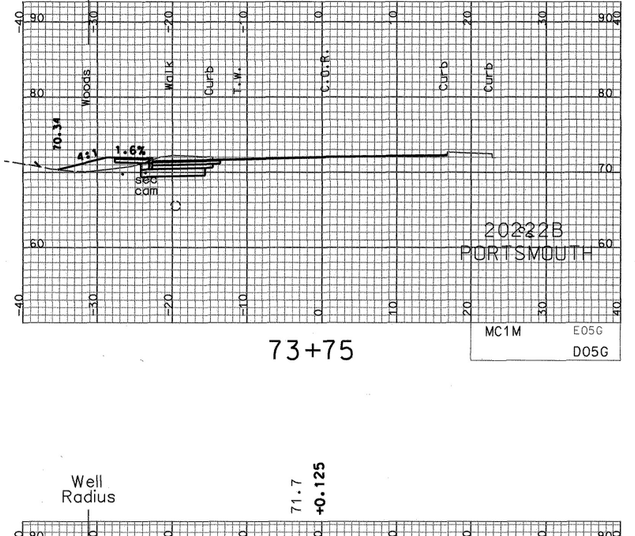

73+75

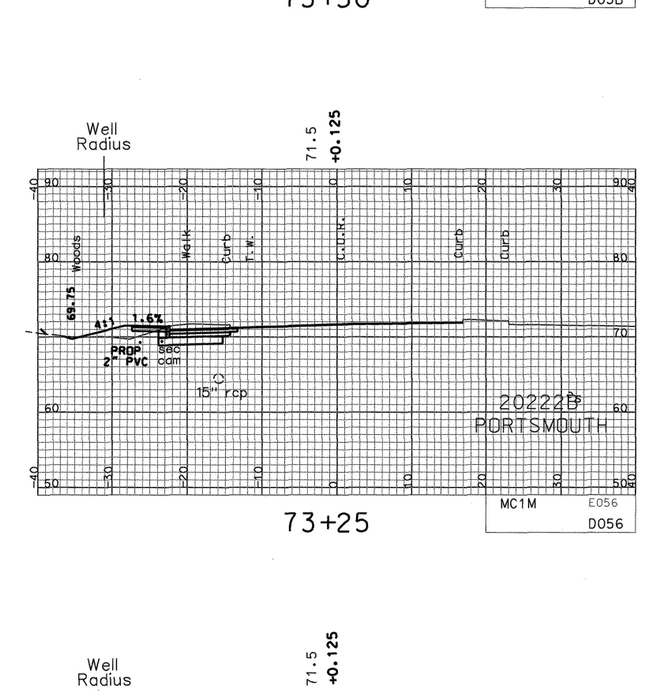

73+50

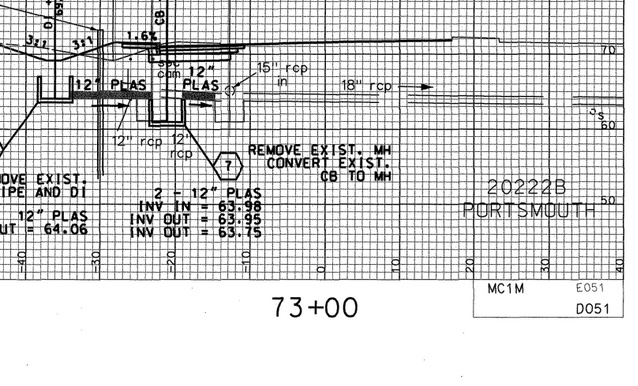

73+25

73+00

SHEET TOTALS			
COMMON EXCAV. 92.62 C.Y.		ROCK EXCAV. – C.Y.	
FILL 35.77 C.Y.		MUCK EXCAV. – C.Y.	
DGN	STATE PROJECT NO.	SHEET NO.	TOTAL SHEETS
20222axs_mc1m_6550-7800	20222B	30	42

SDR PROCESSED	CLB/WED	DATE	4/2014
NEW DESIGN	CLB/CAC	DATE	6/2014
SHEET CHECKED	CAC	DATE	6/16/2014
AS BUILT DETAILS		DATE	

REVISIONS AFTER PROPOSAL

NUMBER	DATE	STATION	STATION	DESCRIPTION

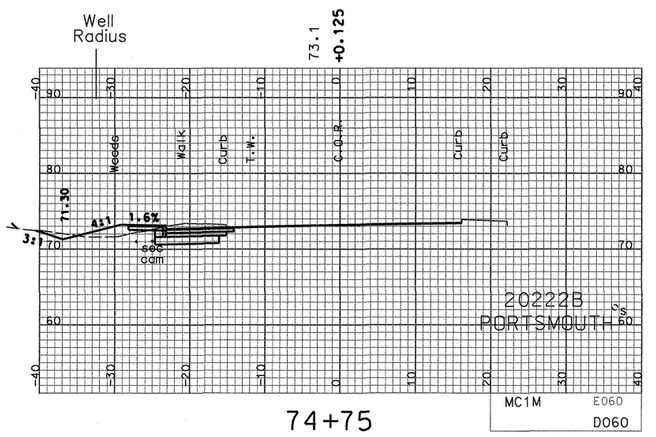

74+75

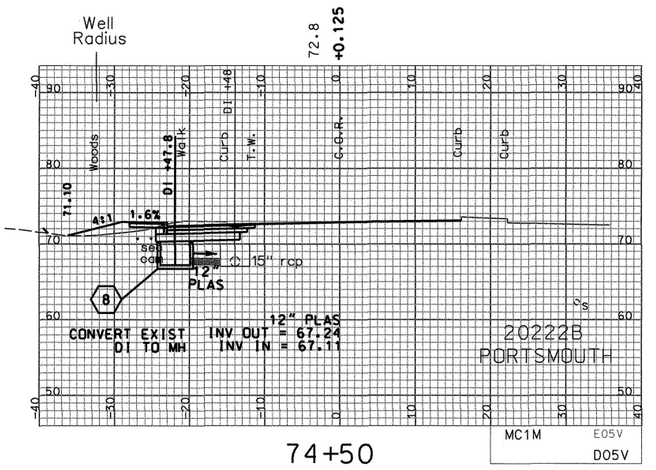

74+50

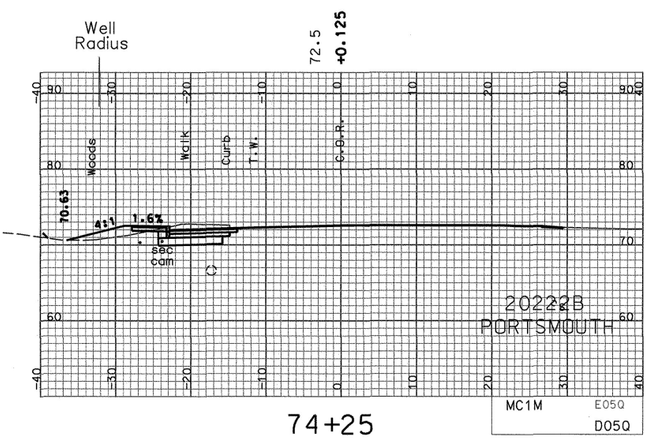

74+25

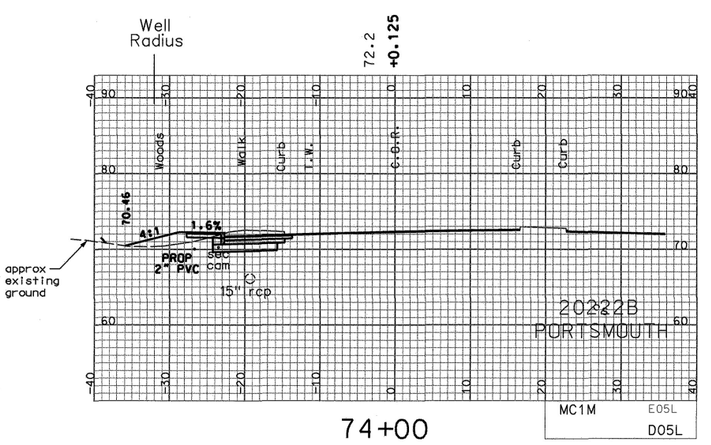

74+00

SHEET TOTALS			
COMMON EXCAV. 93.23 C.Y.		ROCK EXCAV. – C.Y.	
FILL 27.75 C.Y.		MUCK EXCAV. – C.Y.	
DGN	STATE PROJECT NO.	SHEET NO.	TOTAL SHEETS
20222axs_mc1m_6550-7800	20222B	31	42

SDR PROCESSED	CLB/WED	DATE	4/2014
NEW DESIGN	CLB/CAC	DATE	6/2014
SHEET CHECKED	CAC	DATE	6/16/2014
AS BUILT DETAILS		DATE	

REVISIONS AFTER PROPOSAL

NUMBER	DATE	STATION	STATION	DESCRIPTION

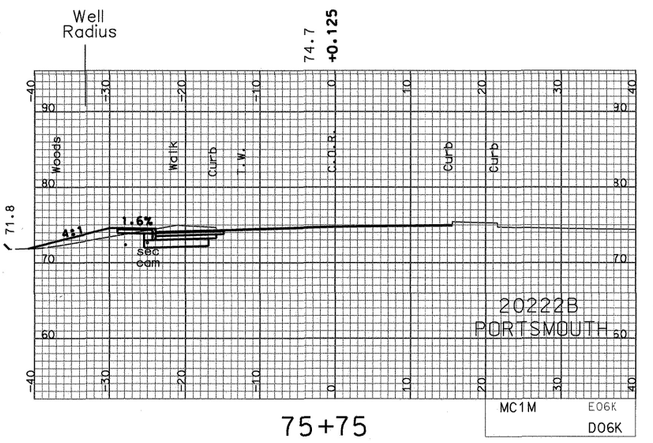

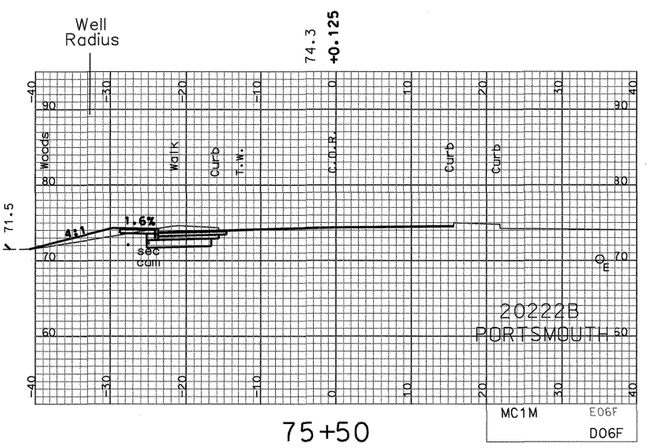

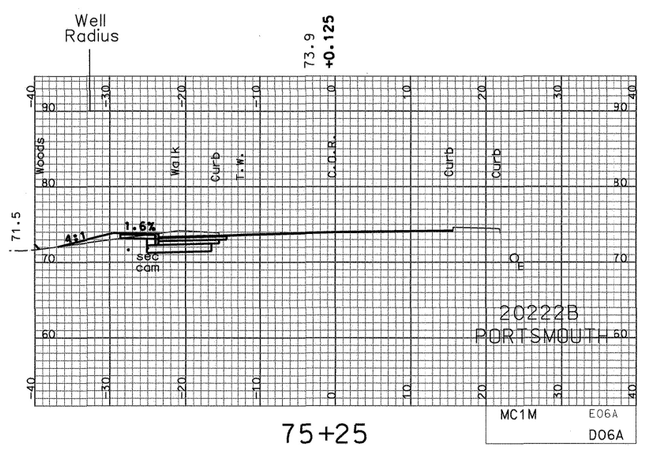

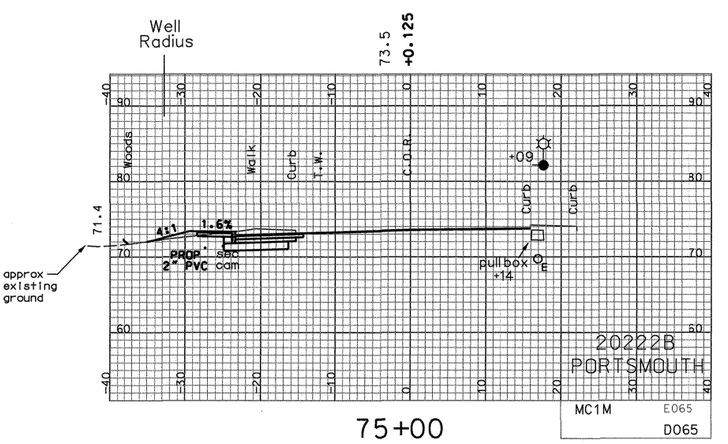

SHEET TOTALS			
COMMON EXCAV. 90.83 C.Y.		ROCK EXCAV. – C.Y.	
FILL 24.11 C.Y.		MUCK EXCAV. – C.Y.	
DGN	STATE PROJECT NO.	SHEET NO.	TOTAL SHEETS
20222axs_mc1m_6550-7800	20222B	32	42