Americans with Disabilities Act Title II Transition Plan

August 2016

V.1.6

This Page Left Intentionally Blank

DRAFT

Table of Contents

Introduction 1
Purpose of NHDOT 1
Vision of NHDOT 1
Transition Plan Need and Purpose 2
Limitations 2
Transition Plan Management 3
Federal and State Accessibility Requirements 3
a.) Americans with Disabilities Act 3
b.) ADA and its Relationship to Other Laws 5
c.) Under Title II, NHDOT must meet these general requirements: 6
d.) New Hampshire Accessibility Requirements 7
Program Staffing/Workgroup 7
Work Group Accomplishments 8
Grievance Procedure 9
Communications 10
Website Communications 10
Public Involvement 10
Outreach to New Hampshire Municipalities 12
Sub-Recipient Assurances to FHWA 12
Self-Evaluation 12
Fixed Work Sites 13
Rest Areas 14
Accessible Pedestrian Signals (APS) 16
Curb Ramps, Crosswalks and Sidewalks 18
Transportation Centers and Park and Rides 20
Maintenance 20
Correction Program 21

DRAFT

Appendices

Appendix A: ADA Title II Transition Plan Contacts
Appendix B: NHDOT ADA Grievance Procedure
Appendix C: Web Site Accessibility Policy & Web Site Accessibility Standards
Appendix D: Fixed Work Sites ADA summaries and Accessibility Code Checklist:

- District Offices
- John O. Morton Building
- Materials and Research facility
- Mechanical Services facility
- Bureau of Traffic facility
- Transportation Management Center
- Bureau of Turnpikes facility
- E-ZPass Walk-in-Centers
- Park and Ride Transportation Centers
- Rest Areas

Appendix E: Accessible Pedestrian Signal data
Appendix F: State Asset Data Exchange System (SADES) Pedestrian Infrastructure Collection Guide
Appendix G: Curb Ramp, Crosswalk and Sidewalk ranking and ADA summaries
Appendix H: Transportation Center and Park and Ride ADA Summary
Glossary

DRAFT

THE STATE OF NEW HAMPSHIRE
DEPARTMENT OF TRANSPORTATION

Victoria F. Sheehan
Commissioner

William Cass, P.E.
Assistant Commissioner

August, 2016

The Americans with Disabilities Act (ADA) of 1990 was conceived with the goal of integrating people with disabilities into all aspects of life, with Transportation playing a key role in its fulfillment.

The U.S. Census Bureau reported that the overall percentage of New Hampshire residents with a disability was 12.7%. This means that 166,300 of 1,309,800 people have one or more disabilities. This does not take into account persons with temporary disabilities due to an accident or sickness. These statistics underscore the need to ensure physical accessibility is consistent statewide. As Commissioner of the New Hampshire Department of Transportation (NHDOT), I believe it is the duty of this department to develop and implement a plan to meet that need. To assure that appropriate program measures are implemented, monitored and updated, I have designated Sandt Michener as the Department's ADA Title II Coordinator. Mr. Michener can be reached by telephone at 603.271.3736 or by email at smichener@dot.state.nh.us.

This document will serve as the guideline to ensure that NHDOT rights-of-ways, including sidewalks, curb ramps, and crosswalks —are accessible to and usable by people of all abilities. The Transition Plan articulates the current state of accessibility of NHDOT assets and provides a clear path to make its assets accessible to everyone. NHDOT is committed to meeting the requirements of the ADA for the benefit of all who live in, work in or visit New Hampshire.

Victoria F. Sheehan
Commissioner

JOHN O. MORTON BUILDING • 7 HAZEN DRIVE • P.O. BOX 483 • CONCORD, NEW HAMPSHIRE 03302-0483
TELEPHONE: 603-271-3734 • FAX: 603-271-3914 • TDD: RELAY NH 1-800-735-2964 • INTERNET: WWW.NHDOT.COM

Introduction

Transportation excellence enhancing the quality of life in New Hampshire is the mission of the New Hampshire Department of Transportation (NHDOT). This document is intended to serve as a guide to further the mission, purpose and vision of NHDOT by outlining key actions for making the State-managed transportation system accessible to individuals with disabilities. Furthermore, this Transition Plan is intended to serve as an operating document to fulfill the requirements of Section 504 of the Rehabilitation Act of 1973 and Title II of the Americans with Disabilities Act of 1990.

Purpose of NHDOT

Transportation excellence in New Hampshire is fundamental to the state's sustainable economic development and land use, enhancing the environment, and preserving the unique character and quality of life. The department will provide safe and secure mobility and travel options for all of the state's residents, visitors, and goods movement, through a transportation system and services that are well maintained, efficient, reliable, and provide seamless interstate and intrastate connectivity.

Vision of NHDOT

Transportation in New Hampshire is provided by an accessible, multimodal system connecting rural and urban communities. Expanded transit and rail services, a well-maintained highway network and airport system provide mobility that promotes smart growth and sustainable economic development, while reducing transportation impacts on New Hampshire's environmental, cultural, and social resources. Safe bikeways, sidewalks, and trails link neighborhoods, parks, schools, and downtowns. Creative and stable revenue streams fund an organization that uses its diverse human and financial resources efficiently and effectively.

DRAFT

Transition Plan Need and Purpose

The Americans with Disabilities Act (ADA), enacted on July 26, 1990, is a civil rights law that prohibits discrimination in access to government services, public transportation, jobs, public accommodations and telecommunications on the basis of disability. As required by Title II of the ADA, 28 CFR. Part 35 Sec. 35.105 and Sec. 35.150, NHDOT has conducted a self-evaluation of its facilities and has developed this Transition Plan detailing how the organization will ensure all of its facilities, services, programs and activities are accessible to all individuals.

NHDOT's Transition Plan will guide the planning and implementation of necessary program, activity and facility modifications. NHDOT maintains more than 4,500 miles of roads and 2,100 bridges statewide. As these roads and bridges undergo alterations, the associated pedestrian facilities will be upgraded to current ADA standards to the maximum extent feasible. Additional improvements will be made with separate projects and internal work forces to complete the plan in a timely manner. NHDOT-owned buildings to which the public has access will also be upgraded. Given the complexity and need for a deliberate effort to follow through on the department's self-evaluation, this document sets forth all of the elements contemplated and/or completed to establish a final and executable multi-year Transition Plan. This work will result in a restated NHDOT commitment to the development and maintenance of policies, programs, and facilities that ensure equal access to all.

Limitations

Many challenges exist in reaching full compliance with the ADA. To the maximum extent feasible, upgrades will occur as alterations to the existing rights-of-way and building facilities are made. Working within the limits owned by NHDOT, and completing construction within the physical constraints of each project or facility NHDOT may find it impossible to accomplish a fully compliant solution. Every reasonable effort will be made to remove all required barriers and provide easy access to the transportation facilities over which the department has control. In addition,

DRAFT

attempts will be made to work with other public right-of-way owners and adjacent property owners to determine the best solution for each area.

Transition Plan Management

NHDOT's transition plan will receive routine updates every two years commensurate with the Ten Year Plan (TYP), State Transportation Improvement Program (STIP) and State budget. To streamline plan updates and keep the document current and relevant, appendices will be updated continuously as barriers are removed, new information is available and it does not alter the intent of the transition plan. The update schedule may be altered at the discretion of NHDOT based on changes in guidance from the United States Access Board, Federal policy, and NHDOT policy. NHDOT's Transition Plan is available for continual public inspection through the NHDOT website (www.nh.gov/dot) and at the Office of Federal Compliance website (http://www.nh.gov/dot/org/administration/ofc/index.htm).

Federal and State Accessibility Requirements

a.) Americans with Disabilities Act

The Americans with Disabilities Act (ADA) was enacted on July 26, 1990, and provides comprehensive civil rights protections to persons with disabilities in the areas of employment, state and local government services, and access to public accommodations, transportation, and telecommunications. The ADA is companion civil rights legislation to the Civil Rights Act of 1964 and Section 504 of the Rehabilitation Act of 1973. With respect to public entities, the ADA mandates that qualified disabled individuals shall not be excluded from participation in, denied the benefit of, or be subjected to discrimination under any program or activity. The Act also provides disabled employees with certain protections and requires employers to make reasonable accommodation for disabled applicants and employees. The ADA is divided into five parts, covering the following areas:

DRAFT

Title I: Employment

Employers, including governmental agencies such as NHDOT, must ensure their practices do not discriminate against persons with disabilities in the application, hiring, advancement, training, compensation, discharge of an employee, or other terms and conditions of employment.

Title II: Public Services

Title II of ADA pertains to the programs, activities and services public entities provide. As a provider of public transportation services and programs, NHDOT must comply with this section of the Act as it specifically applies to state public service agencies and state transportation agencies. Title II of the ADA provides that, "…no qualified individual with a disability shall, by reason of such disability, be excluded from participation in or be denied the benefits of the services, programs, or activities of a public entity, or be subjected to discrimination by any such entity." (42 USC. Sec. 12132; 28 CFR. Sec. 35.130)

Title III: Public Accommodations

Title III requires places of public accommodation to be accessible to and usable by persons with disabilities. The term "public accommodation" as used in the definition is often misinterpreted as only applying to public agencies, but the intent of the term is to refer to any privately funded and operated facility open to and/or used by the public.

Title IV: Telecommunications

This title covers regulations regarding private telephone companies, and requires common carriers offering telephone services to the public to increase the availability of interstate and intrastate telecommunication relay services to individuals with hearing and speech impairments.

Title V: Miscellaneous Provisions

Title V contains several miscellaneous regulations, including construction standards and practices, provisions for attorney fees, and technical assistance provisions. The Department of Justice's [DOJ] established implementing regulations for Title II of the ADA which specify in relevant part that a public entity must evaluate its services, programs, policies, and practices to determine whether they are in compliance with the

DRAFT

nondiscrimination requirements of ADA. See 28 C.F.R. Sec. 35.105. The DOJ regulations were issued in July, 1991, and have been revised from time to time to reinforce the essential requirements of the law. These DOJ regulations mandate that each public entity is required to examine activities and services and identify problems that may limit accessibility for persons with disabilities. The entity must then proceed to make the necessary changes resulting from the Self-Evaluation. The DOJ regulations implementing Title II of the ADA further require that a Transition Plan be prepared to describe any structural or physical changes required to make programs accessible.

b.) ADA and its Relationship to Other Laws

Title II of the ADA is companion legislation to two previous Federal statutes and regulations: the Architectural Barriers Acts of 1968 and Section 504 of the Rehabilitation Act of 1973.

The Architectural Barriers Act of 1968 is a Federal law that requires facilities designed, built, altered or leased with Federal funds to be accessible. The Architectural Barriers Act marks one of the first efforts to ensure access to the built environment.

Section 504 of the Rehabilitation Act of 1973 is a Federal law that protects qualified individuals from discrimination based on their disability. The nondiscrimination requirements of the law apply to employers and organizations that receive financial assistance from any Federal department or agency. Title II of ADA extended this coverage to all state and local government entities, regardless of whether they receive Federal funding or not.

When addressing accessibility needs and requirements, it is important to note that the ADA and Title II **do not** supersede or preempt state or local laws that may offer **equivalent** or **greater** protections.

DRAFT

c.) Under Title II, NHDOT must meet these general requirements:

- Operate its programs so that, when viewed in its entirety, the programs are accessible to and useable by individuals with disabilities (28 C.F.R. Sec. 35.150).
- Not refuse to allow a person with a disability to participate in a service, program or activity simply because the person has a disability (28 C.F.R. Sec. 35.130 (a)).
- Make reasonable modifications in policies, practices and procedures that deny equal access to individuals with disabilities unless a fundamental alteration in the program would result (28 C.F.R. Sec. 35.130(b) (7)).
- Not provide services or benefits to individuals with disabilities through programs that are separate or different unless the separate or different measures are necessary to ensure that benefits and services are equally effective (28 C.F.R. Sec. 35.130(b)(iv) & (d)).
- Take appropriate steps to ensure that communications with applicants, participants and members of the public with disabilities are as effective as communications with others (29 C.F.R. Sec. 35.160(a)).
- Designate at least one responsible employee to coordinate ADA compliance (28 CFR § 35.107(a)). This person is often referred to as the "ADA Coordinator." The public entity must provide the ADA Coordinator's name, office address, and telephone number to all interested individuals (28 CFR § 35.107(a)).
- Provide notice of ADA requirements. All public entities, regardless of size, must provide information about the rights and protections of Title II to applicants, participants, beneficiaries, employees, and other interested persons (28 CFR § 35,106). The notice must include the identification of the employee serving as the ADA Coordinator and must provide this information on an ongoing basis (28 CFR § 104.8(a)).
- Establish a grievance procedure. Public entities must adopt and publish grievance procedures providing for prompt and equitable resolution of complaints (28 CFR § 35.107(b)). This requirement provides for a timely resolution of all problems or conflicts related to

DRAFT

ADA compliance before they escalate to litigation and/or the Federal complaint process.

d.) New Hampshire Accessibility Requirements

The New Hampshire Governor's Commission on Disability (NHGCD) was created pursuant to RSA 275-C and is a State of New Hampshire agency that serves people with cross-disabilities, advises the Governor, Legislature, and other state agencies regarding disability-related compliance, and provides assistance with the Americans With Disabilities Act (ADA) and other disability law compliance. NHGCD is organizationally structured directly within the Office of the Governor, with its Chair and Commission Members appointed by the Governor. The Commission Members afford all of us a breadth of institutional knowledge and real life experiences applicable to those with a disability in a host of venues.

NHGCD is the designated agency for the federally-funded Client Assistance Program and is the housing agency for the federally-mandated Statewide Independent Living Council. Further, NHGCD administers the Telecommunications Equipment Assistance Program, which provides for access to telephone service for qualified individuals with a disability and is the recipient for an annual appropriation that funds Newsline for the Blind, an online service guaranteeing access to newsprint for those who are blind or have low vison.

Program Staffing/Workgroup

The Commissioner of the NHDOT is ultimately responsible for implementation of the transition plan and has the authority to direct resources and activities necessary to carry out the plan. Managing and implementing the NHDOT ADA Transition Plan requires a multidisciplinary approach encompassing policy development, outreach, technical support and oversight. These responsibilities, required by 28 CFR 35.107, are managed by the ADA Coordinator, Chief of Labor Compliance, Pavement Design Engineer, Highway Maintenance Systems Engineer, Director of Policy and Administration, Assistant Director of Project Development,

Administrator of the Bureau of Highway Design, Administrator of Bureau of Traffic, and Administrator of Planning and Community Assistance.

The ADA Coordinator is Sandt Michener (see Appendix A for contact information) and his office is located in the Office of Federal Compliance under the direction of the Director of Policy and Administration. The ADA Coordinator is responsible for addressing complaints and, if necessary, conducting investigations as they are received and tracking the overall progress of the implementation of the Transition Plan. The ADA Coordinator is also responsible for developing policies and procedures to integrate Title II requirements into NHDOT practices to ensure the obligations of ADA and the Transition Plan are met.

Support is provided by the Final Design section of Bureau of Highway Design and work with the ADA Coordinator to develop policy and provide technical support for design and construction at a project level. In addition to providing support for projects, the ADA Coordinator assists in implementing design options that address accessibility complaints.

An ADA Transition Plan workgroup was formed in 2013 and met intermittently to address pedestrian infrastructure deficiencies. Upon release of the FHWA's Technical Assistance on the ADA Requirements to Provide Curb Ramps Through Resurfacing the workgroup began meeting on a regular basis. In late 2014, the workgroup began meeting with the intent of updating the NHDOT ADA Transition Plan and begin a self-evaluation of its facilities. In mid-2015, upon hiring the Federal Programs Specialist/ADA Coordinator, the group was meeting weekly to address ADA issues affecting the department in addition to the ADA Transition Plan update.

Please refer to Appendix A for contact information.

Work Group Accomplishments

- Partnered with University of New Hampshire Technology Transfer (UNH T^2) to develop a State Asset Data Exchange System (SADES) module for the collection of inventory data collection. SADES is a cloud-based solution to effectively and uniformly collect critical

infrastructure data on a statewide level that provides specifications, methods, training and data exchange services for all stakeholders. NHDOT leveraged the SADES program to collect sidewalk, curb ramp, crosswalk and Accessible Pedestrian Signals (APS) data and take advantage of assets collected by Regional Planning Commissions (RPCs).

- Completed SADES inventory of NHDOT-owned sidewalks, curb ramps, crosswalks and APS in fulfillment of the department's self-evaluation.
- Contracted for standard drawings of curb ramps and sidewalks.
- Developed means of QA/QC of SADES inventory data.
- Established criteria for prioritization and analysis of SADES data.
- Incorporated ADA compliance awareness in outreach trainings, webinars and sub-recipient reviews conducted by the NHDOT Office of Federal Compliance.
- Cultivated relationships in the disability community and solicited input for the Transition Plan and NHDOT projects.
- Completed ADA inventory of NHDOT-owned facilities such as offices, park and rides, transportation centers, rest areas, E-ZPass walk-in centers and welcome centers in fulfillment of the department's self-evaluation.

Grievance Procedure

Under the ADA, users of NHDOT facilities and services have the right to file a grievance if they believe the department has not provided reasonable accommodation.

The Grievance Procedure, required by 28 CFR 35.107, can be found in Appendix B of this report and on the NHDOT website and provides details on how to file a complaint. Under the Grievance Procedure, a formal complaint must be filed within 90 calendar days of the alleged occurrence. NHDOT will act or respond only to complaints made through the grievance process identified in Appendix B.

DRAFT

Communications

According to Section 35.160(a) of ADA, "…A public entity shall take appropriate steps to ensure that communications with applicants, participants, and members of the public with disabilities are as effective as communications with others." This means that NHDOT is required to provide equally effective communication to individuals with disabilities. Equally effective communication can be provided by offering alternative formats, auxiliary aid(s) and/or services upon request. For example, American Sign Language (ASL) interpreters are hired, as requested, for people who are deaf or hearing impaired.

Website Communications

The New Hampshire Department of Information Technology (DoIT) has the responsibility to maintain standard state communication processes, tools and guidelines. This will enhance end user accessibility to state information systems and ensure that all citizens have reasonable access to the information they need.

- State of New Hampshire Website Accessibility Standards (See Appendix C)
- State of New Hampshire Website Accessibility Policy (See Appendix C)

By following these guidelines, NH State websites will meet, to the maximum extent feasible, current ADA standards.

Public Involvement

NHDOT recognizes that broad public participation is essential to the development of New Hampshire's transportation system. As required by the ADA and NHDOT's public participation guidance, any public meeting, hearing or comment period held by NHDOT is accessible. NHDOT provides qualified ASL interpreters upon request and will provide documents in an accessible electronic format or other alternative formats, such as large print

or Braille. All public notices shall contain contact information for accommodation requests.

Public meetings, trainings, programs and other events must be held in an accessible location and indicated on the meeting notice. Project managers and other staff are directed to use the NHDOT Bureau of Planning and Community Assistance guidelines for public participation and the Department of Justice Guide to Conducting Accessible Meetings to assist in planning public meetings.

NHDOT, through the ADA Coordinator, has conducted outreach to solicit comment concerning its self-evaluation and Transition Plan update by working with organizations serving people with disabilities including, but not limited to:

- New Hampshire Governor's Commission on Disability
- Services for Blind & Visually Impaired, Department of Education
- Brain Injury Association of New Hampshire
- Granite State Independent Living
- Disabilities Rights Center
- New Hampshire Association for the Blind
- New Hampshire Council on Developmental Disabilities
- New Hampshire Speech, Language & Hearing Association
- Crotched Mountain ATECH Services
- Community Bridges
- Northeast Deaf & Hard of Hearing Services

In addition, all New Hampshire media, including dailies, weeklies, TV and Radio have been sent press releases on the Transition Plan. All NHDOT bureaus have also been notified and notices have been posted on the NHDOT website.

A public forum to discuss the Transition Plan was held on 12 September 2016 at NHDOT's Morton Building.

A current and approved version of the ADA Transition Plan will be posted on the NHDOT website for public viewing.

DRAFT

Outreach to New Hampshire Municipalities

There are 234 municipalities in New Hampshire, of which approximately 120 towns and cities have more than 50 employees.

- Any public entity with 50 or more employees is required to complete a self-evaluation and a transition plan.
- Public entities with fewer than 50 employees must still demonstrate a commitment to removing barriers under Section 504.

Outreach efforts are ongoing, through the ADA Coordinator, to inform towns of their obligations under Section 504 to complete a self-evaluation to remove barriers and develop a transition plan, if required. The department is working closely with the New Hampshire Municipal Association, Regional Planning Commissions and Technology Transfer at UNH to educate, train and provide the tools necessary to assist municipalities to meet objectives of Section 504.

Sub-Recipient Assurances to FHWA

Under the Title VI program, NHDOT is identifying and reviewing relevant sub-recipients as to their overall compliance with the non-discrimination provisions that FHWA enforces. NHDOT's Office of Federal Compliance is charged with focusing on the revisions needed to ensure compliance with the requirements of the ADA, including self-evaluation and Transition Plan completion, if applicable. Federally-funded Local Public Agency (LPA) construction projects are also monitored to ensure ADA compliance. NHDOT will use its policy statement as a model for the type of assurances that are expected from sub-recipients. NHDOT provides training on its expectations through outreach and also monitors compliance with these agreements.

Self-Evaluation

NHDOT, as required by Title II of the ADA, maintains a self-evaluation of physical assets and current policies/practices. NHDOT has identified the

following general areas that need to be included in the transition plan inventory database: sidewalks within the NHDOT Public Right-of-Way, curb ramps, crosswalks, pedestrian signals, rest areas, transportation centers, park and rides and NHDOT offices. As inventories are completed/updated, they will be included in appendices of the Transition Plan and serve as an important tool to assist in project programming, scoping, development and implementation. The department-wide inventory for this transition plan was initiated in 2013, and the inventory database will be continually updated as facilities are added to the inventory or brought up to ADA compliance. The accessibility parameters assessed for the inventory are primarily derived from the latest draft of the Public Rights-of-Way Accessibility Guidelines (PROWAG). The latest publication of PROWAG can be retrieved from the United States Access Board's website: http://www.access-board.gov/guidelines-and-standards.

NHDOT is committed to addressing the barriers identified in the self-evaluation. As the self-evaluation is completed and updated, fixed work sites that are non-compliant will be prioritized and programmed; either in an upcoming adjacent project or within a newly created ADA transition plan programmatic project that is within the NHDOT Ten Year Plan (TYP), Capital Budget or Operating Budget. With the existing condition of the non-compliant facilities identified thus far in the self-evaluation, the department is considering a timeframe of approximately ten years to make fixed work sites fully compliant to the maximum extent feasible. This timeframe would require districts to address non-compliant facilities at a rate of approximately one tenth of the current inventory per year over the next ten years. The funding and scheduling of accessibility improvements will continue concurrent with the NHDOT TYP.

Fixed Work Sites

NHDOT owns and leases numerous buildings throughout the state. Those buildings open to the public have been evaluated for potential accessibility improvements and have been added the transition plan inventory:

- John O. Morton Building
- Materials and Research facility
- Mechanical Services facility

- Bureau of Traffic facility
- Bureau of Turnpikes office
- Transportation Management Center
- District Offices (6)

NHDOT has worked in conjunction with and utilized the services of NHGCD to review the buildings.

These buildings have been divided into two categories; Priority One and Priority Two. Priority One buildings are those buildings that have employee use and a high potential for public use. Priority Two buildings are those buildings that have employee use and a moderate potential for public use.

There are a majority of NHDOT buildings that are not accessed by the public, such as maintenance sheds and storage facilities for equipment and road salt. In terms of the possibility that NHDOT employees or contractors with disabilities who work in these facilities may require accommodation to a disability, NHDOT addresses such matters under its Equal Employment Opportunity Policy as a reasonable accommodation, consistent with the requirements of federal law. Based on this assessment, NHDOT has focused its efforts on surveying NHDOT facilities that offer on-going programs and services to the public to ensure they are accessible.

See Appendix D for NHDOT Fixed Work Site ADA summaries.

Rest Areas

NHDOT owns twelve Rest Areas/Welcome Centers statewide, which feature restrooms and tourist information, while some locations include vending machines.

Two of these rest areas also include service plazas, which offer gas stations and electric vehicle charging. These areas also offer food service, gift shops and liquor stores in addition to restrooms and vending machines. Much of this space is leased by a private party.

DRAFT

Staffing, daily operations and routine maintenance for the remaining ten rest areas is the responsibility of NH Department of Resources and Economic Development (DRED). Numerous barriers have been removed by DRED and NHDOT as a result of routine maintenance and improvements in response to ADA surveys conducted in 2012-13.

Several accessibility guidelines, codes and regulations apply to rest areas. The ADA Accessibility Guidelines (ADAAG) applicable to rest area-type facilities include guidelines for:

- Buildings and Facilities (1991, as amended through 2002).
- Play Areas (published in the Federal Register October 18, 2000, and amended November 20, 2000).
- Recreation Facilities (published in the Federal Register on September 3, 2002).
- Outdoor Developed Areas (draft of final guidelines released on October 19, 2009, but are not yet codified).

In addition to ADAAG, the Code of Federal Regulations (CFR) includes regulations related to accessibility that apply to Interstate rest areas and historic rest areas and waysides:

- Interstate Rest Areas: 49 CFR 27.75 requires states to make Interstate rest area facilities accessible whenever the state uses Federal financial assistance to improve the rest area or whenever the state uses Federal financial assistance to construct, reconstruct or otherwise alter the roadway adjacent to or in the near vicinity of the rest area.
- Historic Rest Areas & Waysides: If any state rest areas and waysides are historic properties listed in, or eligible for, listing in the National Register of Historic Places or are designated as historic under an appropriate state or local law. 28 CFR 35.151(d) requires alterations comply, to the maximum extent feasible, with Section 4.1.7 of ADAAG.

A fixed work site accessibility code checklist for buildings, rest areas and transportation centers can be found in Appendix D.

Accessible Pedestrian Signals (APS)

As part of its self-evaluation, NHDOT, in conjunction with UNH T^2, has developed a process and tool for the collection of Accessible Pedestrian Signals (APS) inventory data. This inventory identified over 600 NHDOT APS crossings and consists of 23 attributes per signal to reveal the level of accessibility and aid in programming future upgrades.

- Section 4A.02 of the Manual on Uniform Traffic Control Devices ("MUTCD") defines an Accessible Pedestrian Signal ("APS") as a device that communicates information about pedestrian timing in a non-visual format such as audible tones, verbal messages, and/or vibrating surfaces. The draft PROWAG definition is similar; however, under PROWAG, APS devices must include both audible and vibrotactile functions. APS devices let pedestrians who are blind or visually impaired know when the WALK interval begins and terminates. Pedestrians who know when the crossing interval begins will be able to start a crossing before turning cars enter the intersection and can complete a crossing with less delay. Audible signals can also provide directional guidance, which is particularly useful at non-perpendicular intersections and at wide multi-lane crossings.

The current draft PROWAG calls for accessible pedestrian signals to be required at all intersections equipped with pedestrian signals and at all pedestrian crossings across multi-lane roundabout entry or exit roadways, whenever new construction or alterations occur. The FHWA's policy is to consider the U.S. Access Board's draft PROWAG as recommended practice for new and reconstructed signals. If the proposed requirements are retained in the Access Board's final rule, the MUTCD will be revised in the future to reflect those requirements.

NHDOT is obligated to comply with MUTCD requirements as the MUTCD "…shall be recognized as the national standard for all traffic control devices

installed on any street, highway, bikeway, or private road open to public travel…"

It is particularly challenging to adopt a standard to follow when there are multiple sets of guidelines. Transportation agencies are reluctant to invest in one variety of APS that may become instantly non-compliant as draft guidelines are revised and finally approved. NHDOT is anticipating this potential of changing standards and is collecting specific numerical data rather than compliant/non-compliant data. These data will be viable and be applicable to any forthcoming standard.

NHDOT has taken these data and completed a prioritization of APS intersections managed by the department. As part of the inventory, each intersection received a rating to determine the level of APS signal compliance with the draft PROWAG, as directed by FHWA. The ranking of the intersections was done utilizing the methodology laid out in the National Cooperative Highway Research Project 3-62 *APS Prioritization Tool*. In general, the signalized intersections with higher scores are the ones with the greatest need for conversion to APS, but the rankings are always considered within context so that the greatest needs are served first. In the future, factors outside the ranking that affect an intersection's priority for APS may include the number of pedestrians at the intersection, the presence of nursing homes, hospitals, transit and other public services, and requests for APS. All new construction and reconstruction projects include APS consideration, per direction from the draft PROWAG.

The Bureau of Traffic maintains an inventory and evaluation of its signalized pedestrian crossings. A corresponding signal number, town or city location, GPS coordinates and a street/intersection reference have been used to identify each location.

As future evaluations of non-signalized pedestrian crossings are conducted, they will be added to this document, and will be entered into the statewide planning process.

Accessible Pedestrian Signal data can be found in Appendix E.

DRAFT

Curb Ramps, Crosswalks and Sidewalks

NHDOT recognizes that a self-evaluation of pedestrian facilities within its public rights-of-way is a key element to a comprehensive and successful transition plan. The department has conducted an update of its inventory of curb ramps, crosswalks and sidewalks within the NHDOT Public Right-of-Way. A pedestrian infrastructure data collection guide has been developed and is used for reporting consistency and quality control. See Appendix F.

Curb ramps comprise a significant segment of NHDOT's transportation facilities that must be brought up to ADA compliance. Of the 2200 existing, inventoried curb ramps in NHDOT right-of-way, approximately 55% are fully compliant. This does not, however, include locations where curb ramps may be needed that have yet to be built. Through the self-evaluation process, NHDOT received input from the disabled community to aid in determining high priority curb ramps that may not be captured as such in the NHDOT curb ramp prioritization system. Prioritization will be updated as new information becomes available.

GIS mapping of the sidewalks was completed in 2015 and an on-site evaluation of approximately 260 miles of sidewalk in the NHDOT right-of-way (not including those in an Urban Compact) was completed in 2016.

The completed inventory, after being processed for quality control, has been prioritized utilizing the ranking system devised by the ADA Transition Plan Workgroup. Criteria include condition, width, slope, location, lighting, clearance, etc. These criteria are assigned values relating to usability and impact on accessibility to determine an attribute rating. These ratings are then factored in to arrive at a normalized ranking percentage, with low numbers indicating a poor condition and high numbers indicating a good condition. There is an annual programmatic in place to address the poorest ranking assets and bring them up to current ADA standards. Deficiencies will be addressed through various means: 1) as part of routine work (like paving), 2) as part of larger improvement projects (I-93), and 3) as accessibility specific projects using an annual budget (programmatic project).

DRAFT

In order for NHDOT to complete curb ramp compliance and carry out the required alterations, the ADA Coordinator will track alterations made to pedestrian facilities through construction projects and the annual paving program. As these projects are scheduled for final inspection, the ADA Coordinator will verify that the finished product is compliant. The ADA Coordinator is also tasked to review the scope and limits of scheduled projects. The placement of the ADA Coordinator in the Office of Federal Compliance and as a member of the Traffic Control Committee will ensure that projects that impact pedestrian infrastructure during and after construction will be addressed. In addition, any location listed in the inventory document that falls within a project's limits, or within feasible proximity to make it part of the project scope, should be incorporated into the plans. Pedestrian crossings that are outside of the physical project limits may be omitted where determined to be cost-prohibitive. Periodic reviews will be necessary due to inventory updates and changes in scheduling until planned alterations have been completed and the Director of Project Development has made a determination regarding any remaining curb ramp locations to be addressed by separate contract(s) or programmatic.

A substantial number of curb ramp upgrades are completed during the alteration process of the annual pavement program. This includes construction of new curb ramps as well as upgrading existing ramps. For example, during the calendar year 2016 program, over 450 curb ramps were reconstructed to meet current ADA standards. This represents a significant percentage of statewide curb ramps being brought into full compliance as well as barriers removed. These upgrades represent an investment by NHDOT of approximately $500,000.00 and have the net effect of reducing the potential number of miles of paving that can be accomplished annually. The current paving program is a ten-year cycle and it is estimated that by 2023, most NHDOT curb ramps will have been addressed and brought into full compliance. The ADA Coordinator plays an integral role in the pavement program by working with the Pavement Design Engineer to ensure ADA compliance.

The curb ramp/crosswalk/sidewalk inventory is an important tool to assist in project scoping and development and to track NHDOT progress on barrier removal and the integration of facilities meeting PROWAG guidance.

The inventory will be continually updated as facilities are upgraded. To capture the balance of facilities not covered during upgrades and alterations, curb ramps/crosswalks/sidewalks will be re-surveyed approximately every five years. The sequence will be year one: District 2; year two: District 3; year three: District 4; year four: District 6; and year five: Districts 1 & 5.

See Appendix G for the Curb Ramp, Crosswalk and Sidewalk prioritization ranking and ADA summary.

Transportation Centers and Park and Rides

NHDOT owns and maintains 27 park and rides. Seven locations also feature transportation centers, with scheduled commuter and airport service. Regional Bus lines lease and operate these facilities, as well as fleet of 32 intercity buses, including maintenance and ADA compliance.

Please see Appendix H for Transportation Center and Park and Ride ADA Summaries.

Maintenance

The subject of sidewalk maintenance is frequently discussed across the state, with a complex set of statutes, local ordinances and informal agreements going back over 100 years.

In New Hampshire, it is the responsibility of municipalities to maintain pedestrian facilities. According to RSA 231:113 of the New Hampshire's state laws "sidewalks shall be maintained, repaired and reconstructed by the city or town in which they are located without further assessment to the abutting owner."

Guiding the discussion is Federal Code 23 U.S.C. § 116, which states in part that:

> (a) It shall be the duty of the State transportation department to maintain, or cause to be maintained, any project constructed under the provisions of this chapter or constructed under the provisions of prior Acts.

This statutory requirement is interpreted in coordination with the ADA Title II regulatory obligation for public entities to maintain in operable working condition those features of facilities and equipment that are required to be readily accessible to and usable by persons with disabilities, as discussed in subpart 4, above. To ensure compliance, NHDOT must either maintain the project, or secure timely and on-going commitments from localities in which a project is built to maintain that property. To achieve this, NHDOT will work to build relationships, propose mutually beneficial agreements and incentives.

The discussion will also address snow removal and ice treatment on sidewalks in accordance with 28 CFR § 35.133 Maintenance of accessible features:

> (a) A public entity shall maintain in operable working condition those features of facilities and equipment that are required to be readily accessible to and usable by persons with disabilities by the Act or this part.
> (b) This section does not prohibit isolated or temporary interruptions in service or access due to maintenance or repairs.

In its self-evaluation, NHDOT has identified the need to consistently secure maintenance agreements on federally-aided projects, and will develop a strategy to address this need for accountability. NHDOT will seek municipal commitments applicable to all projects built with federal financial assistance. As part of the review, NHDOT will examine its current policies and procedures to improve maintenance for pedestrian facilities.

Correction Program

NHDOT is committed to addressing the barriers identified in the self-evaluation. As self-evaluations are completed and updated, facilities that

are inaccessible will be prioritized as part of a barrier removal program. Facilities that are accessible but do not meet PROWAG standards will continue to be improved through NHDOT's routine construction program. The funding and schedule of accessibility improvements that are being made as part NHDOT's routine construction program are determined through NHDOT's Statewide Transportation Improvement Plan.

DRAFT

Appendix A
ADA Title II Transition Plan Contacts

ADA Coordinator

Sandt Michener
John O. Morton Building
7 Hazen Drive, POB 483
Room 140
Concord NH 03302-0483
Tel. 603.271.3736
smichener@dot.state.nh.us

Chief of Labor Compliance

Jay Ankenbrock
John O. Morton Building
7 Hazen Drive, POB 483
Room 144
Concord NH 03302-0483
Tel. 603.271.2467
jankenbrock@dot.state.nh.us

Director of Policy and Administration

Fran Buczynski
John O. Morton Building
7 Hazen Drive, POB 483
Concord NH 03302-0483
Tel. 603.271.1676
fbuczynski@dot.state.nh.us

Pavement Design Engineer

Kevin Prince
Materials and Research Building
5 Hazen Drive, POB 483
Concord NH 03302-0483
Tel. 603.271.1752
kprince@dot.state.nh.us

Highway Maintenance Systems Engineer

Roger Appleton
John O. Morton Building
7 Hazen Drive, POB 483
Concord NH 03302-0483
Tel. 603.271.2693
rappleton@dot.state.nh.us

Assistant Director of Project Development

Bill Oldenburg
John O. Morton Building
7 Hazen Drive, POB 483
Concord NH 03302-0483
Tel. 603.271.7419
woldenburg@dot.state.nh.us

Administrator of the Bureau of Highway Design

Jim Marshall
John O. Morton Building
7 Hazen Drive, POB 483
Concord NH 03302-0483
Tel. 603.271.2171
jmarshall@dot.state.nh.us

Supervisor of Systems Planning

Glenn Davison
John O. Morton Building
7 Hazen Drive, POB 483
Concord NH 03302-0483
Tel. 603.271.7145
gdavison@dot.state.nh.us

Administrator of the Bureau of Traffic

Bill Lambert
NH Route 106
Concord NH 03301
Tel. 603.271.2291
wlambert@dot.state.nh.us

Appendix B
NHDOT ADA Grievance Procedure

Complaint Process for Title II of the Americans with Disabilities Act

Title II of the Americans with Disabilities Act (ADA) protects qualified individuals with a disability from discrimination on the basis of that disability in the services, programs, or activities of the New Hampshire Department of Transportation (NHDOT). This notice is posted to inform the public of the provisions of Title II of the ADA and the requirements of the Federal ADA regulations.

Complaint Procedure: The NHDOT does not discriminate against qualified individuals with a disability in its services, programs or activities. Also, qualified individuals with a disability are not excluded from participation in or denied the benefits of the services, programs, or activities of the NHDOT. If you have a complaint under Title II of the ADA about the services, programs or activities of the NHDOT, you are encouraged to file your complaint with the ADA Title II Coordinator.

How to file a Grievance

The procedure to file a grievance is as follows:

1. A formal written grievance should be filed with the ADA Title II Coordinator. If you are unable to provide a written statement an oral grievance can be filed by contacting ADA Title II Coordinator. Under the Grievance Procedure, a formal complaint must be filed within 90 calendar days of the alleged occurrence. Additionally, individuals filing a grievance are not required to file a grievance with NHDOT, but may instead exercise their right to file a grievance with the Department of Justice. Your grievance must include the following information;

- The name, address, and telephone number of the person filing the grievance.
- The name, address, and telephone number of the person alleging ADA violation, if other than the person filing the grievance.

- A description and location of the alleged violation and the remedy sought.
- Information regarding whether a complaint has been filed with the Department of Justice or other Federal or state civil rights agency or court.
- If a complaint has been filed, the name of the agency or court where the complaint was filed, and the date the complaint was filed.

2. The grievance will be either responded to or acknowledged within 10 working days of receipt. If the grievance filed does not concern a NHDOT facility, it will be forwarded to the appropriate agency and the grievant will be notified.

3. Within 60 calendar days of receipt, the ADA Title II Coordinator will conduct the investigation necessary to determine the validity of the alleged violation. If appropriate, ADA Title II Coordinator will arrange to meet with the grievant to discuss the matter and attempt to reach a resolution of the grievance. Any resolution of the grievance will be documented in the NHDOT's ADA Grievance File.

4. If a resolution of the grievance is not reached, a written determination as to the validity of the complaint and description of the resolution, if appropriate, shall be issued by ADA Title II Coordinator and a copy forwarded to the grievant no later than 90 days from the date of the NHDOT's receipt of the grievance.

5. The grievant may appeal the written determination. The request for reconsideration shall be in writing and filed with the New Hampshire Department of Transportation Hearings Officer within 30 days after the ADA Title II Coordinator's determination has been mailed to the grievant. NHDOT's Hearings Officer shall review the request for reconsideration and make a final determination within 90 days from the filing of the request for reconsideration.

6. If the grievant is dissatisfied with NHDOT's handling of the grievance at any stage of the process or does not wish to file a grievance through the NHDOT's ADA Grievance Procedure, the grievant may file a complaint directly with the United States Department of Justice or other appropriate state or Federal agency.

The resolution of any specific grievance will require consideration of varying circumstances, such as the specific nature of the disability; the nature of the access to services, programs, or facilities at issue and the essential eligibility

requirements for participation; the health and safety of others; and the degree to which an accommodation would constitute a fundamental alteration to the program, service, or facility, or cause an undue hardship to the NHDOT. Accordingly, the resolution by the NHDOT of any one grievance does not constitute a precedent upon which the NHDOT is bound or upon which other complaining parties may rely.

File Maintenance

The NHDOT's ADA Title II Coordinator shall maintain ADA grievance files for a period of three years.

Submit all inquiries and grievances to:

ADA Title II Coordinator

Sandt Michener
NHDOT
Office of Federal Compliance
PO Box 483
Concord, NH 03302-0483
Phone: 603-271-3736
Fax: 603-271-8048
E-mail: smichener@dot.state.nh.us

Appendix C

Web Site Accessibility Policy & Web Site Accessibility Standards

FINAL NHS – 05.29.2012 - v.3

WEB AND MOBILE APPLICATION ACCESSIBILITY POLICY

Purpose: To establish a common and uniform policy for all State of New Hampshire agencies to ensure that all web and mobile applications are accessible to disabled users.

Policy: All New Hampshire State agency web and mobile applications shall comply with Title II of the Americans with Disabilities Act, and be consistent in design and navigation with Section 508 of the Rehabilitation Act of 1973.

Accountability: This policy pertains to all State of New Hampshire agency web and mobile applications and to their administrators.

State agencies shall designate a staff member to be responsible for incorporation of this Policy. This responsibility includes the dissemination of guidelines, standards and compliance monitoring reports to the appropriate staff. Appropriate staff includes, but is not limited to, agency employees responsible for site administration or content development as well as any consultant or vendor responsible for an agency web or mobile application and/or content.

The Web Services Division (WSD) within DoIT will regularly monitor all agency web and mobile applications for Section 508 compliance and will send a monitor report to the agency staff member designated as responsible for the incorporation of this policy. It shall be the responsibility of the agency to ensure its web and/or mobile application is in compliance.

Employees who do not comply with this policy shall be subject to disciplinary action as outlined in the Administrative Rules of the Division of Personnel.

Description: The enactment of the Americans with Disabilities Act of 1990 (ADA) protects Americans with physical or mental disabilities from discrimination. There are five sections to the ADA: Employment, Public services, Public accommodations and services operated by private entities, Telecommunications and Miscellaneous provisions. In 1998, Congress amended the Rehabilitation Act to require Federal agencies to make their electronic and information technology accessible to people with disabilities. Inaccessible technology interferes with an individual's ability to obtain and use information quickly and easily. The passing of Section 508 eliminates barriers in information technology, to make available new opportunities for people with disabilities and to encourage development of technologies that will help achieve these goals. This policy requires all state agencies to comply with Section 508 when they develop, procure, maintain or use electronic and information technology. Under Section 508 (29 U.S.C. 794d), agencies must give disabled employees and members of the public access to information that is comparable to the access available to others.

Accountability: This policy pertains to all State of New Hampshire agency web sites and applications and to their administrators. State agencies shall designate a staff member to be responsible for incorporation of this Policy. This responsibility includes the dissemination of any additional guidelines, standards and compliance monitoring reports to the appropriate staff. Appropriate staff includes, but is not limited to, agency employees responsible for site administration or content development as well as any consultant or vendor responsible for an agency Web site and/or content. It is the responsibility of each Agency/Department/Division/Bureau Chief or their designee to enforce this policy.

Reference: IT Standards Exception Policy Web and Mobile Application Accessibility Standards.

FINAL

NHS – 05.29.2012 - v.3

WEB AND MOBILE APPLICATION ACCESSIBILITY STANDARDS

Department of Information Technology - Office of the Chief Information Office (CIO) Effective - 12.01.2005

Purpose:

To establish a common and uniform standard for all State of New Hampshire agencies that will enable and complement the Web and Mobile Application Accessibility Policy.

Standard:

Construction of agency Web pages will conform to Section 508 (of the Rehabilitation Act of 1973) standards. To meet Section 508 provisions, an agency's Web site must conform to the following:

- Providing a text equivalent for every non-text element (e.g., via "alt", "longdesc", or in element content) is required.
- Equivalent alternatives for any multimedia presentation must be synchronized with the presentation.
- Web page design requires that all information conveyed with color is also available without color - from context or markup, for example.
- Server-side image maps require redundant text links for each active region.
- Providing client-side image maps instead of server-side image maps is required except in situations where the regions cannot be defined with an available geometric shape.
- Row and column headers for data tables must be identified.
- Associate data and header cells for data tables that have two or more logical levels of row or column headers must utilize markup.
- Frame identification and navigation will be facilitated with titled frames.
- Design of pages must avoid causing the screen and/or graphics to flicker with a frequency greater than 2 Hz and lower than 55 Hz (between 2Hz and 55Hz).

- If a web site cannot comply with the provisions of these standards, utilize a text-only page with equivalent information or functionality to make a site in compliance. Updating the content of the text-only page must occur whenever the primary page changes.
- When pages utilize scripting languages to display content, or to create interface elements, the information provided by the script will identify with functional text that assistive technology can read.
- When a page requires that an applet, plug-in or other application be present on the client system to interpret page content, the page must provide a link to a plug-in or applet that complies with the provisions of this standard.
- Electronic forms designed for completion on-line must allow people using assistive technology to access the information, field elements and functionality required for completion and submission of the form, including all directions and cues.
- Providing a method that permits users to skip repetitive navigation links is required.
- When a timed response is required, the user receives a signal/alert and the sufficient time allocated to the user to indicate more time is required.

Accountability:

All State of New Hampshire agency sites, including static content, interactive and transactional applications shall comply with this standard. It is the responsibility of each Agency/Department/Division/Bureau Chief or their designee to enforce these standards. Employees who do not comply with this policy shall be subject to disciplinary action as outlined in the Administrative Rules of the Division of Personnel.

Description:

The standards required under federal Section 508 of the Rehabilitation Act deal with a very basic level of accessibility needs while leaving out other issues facing users. In addition to the requirements set forth by Section 508, State agencies are encouraged to use the Success Criteria within the Web Content Accessibility Guidelines 2.0 (http://www.w3.org/TR/WCAG20) developed by the W3C to increase accessibility to users with disabilities. For mobile web application, State agencies are encouraged to conform to the

W3C Mobile Web Application Best Practices
(http://www.w3.org/TR/mwabp).

Additional Information

Section 508 of the Rehabilitation Act: Electronic and Information Technology Accessibility Standards. The Access Board
http://www.access-board.gov/508.htm

Web Accessibility Initiative W3C http://www.w3.org/WAI/

Evaluation, Repair, and Transformation Tools for Web Content Accessibility W3C http://www.w3.org/WAI/ER/existingtools.html

Reference:

IT Standards Exception Policy
Web and Mobile Application Accessibility Policy

Section 508 of the Rehabilitation Act: Electronic and Information Technology Accessibility Standards. The Access Board
http://www.access-board.gov/508.htm

Web Accessibility Initiative W3C http://www.w3.org/WAI/

New Hampshire Accessibility Code Requirements

Approved by the NH Committee on Architectural Barrier-Free Design on January 17, 2012

This document is to be used as a guideline for basic accessibility code compliance for facilities in the state of New Hampshire. This checklist does not address all code requirements for accessibility. Accessibility code requirements specific to medical care facilities including hospitals and skilled nursing facilities, and residential facilities, including one- and two-family homes, apartments and dormitories, are not included.

Checklists provided in this document include:

- Accessible Parking Spaces
- Exterior Accessible Path of Travel from Sidewalks/Parking Lot to Accessible Entrance
- Ramps
- Stairs
- Accessible Entrances and Exterior Doors
- Accessible Counters
- Accessible Interior Path of Travel, Obstacles, Doors
- Elevators and Lifts
- Accessible Toilet Rooms, Accessible Water Closets, Accessible Urinals, Accessible Lavatories, and Accessible Drinking Fountains (Bath Tubs & Showers are not included)
- Fire Alarms and Fire Extinguishers
- Accessible Public Telephones
- Signs
- Employee Break Rooms with Kitchens

Applicable Accessibility Codes:

The Architectural Barrier-Free Design Code for the State of NH (Abfd 300 - AB Code)
http://www.gencourt.state.nh.us/rules/state_agencies/abfd100-300.html
IBC 2006, as amended; ICC/ANSI A117.1 2003, as amended.

U.S. Dept. of Justice 2010 ADA Standards for Accessible Design (ADAAG)
Introduction: http://www.ada.gov/regs2010/2010ADAStandards/2010ADAstandards.htm
Application and Administration:
http://www.ada.gov/regs2010/2010ADAStandards/2010ADAstandards.htm#c1

Please Note: *The ADA has undergone significant changes. The new Title II and Title III regulations are now in effect. The 2010 ADA Standards for Accessible Design are in effect as of March 15, 2012. Please read the important information on this page:*
http://www.ada.gov/revised_effective_dates-2010.htm

NH State Building Code - *IBC 2009, as amended, and ICC/ANSI A117.1-2003, as amended.*
http://www.gencourt.state.nh.us/rsa/html/XII/155-A/155-A-mrg.htm

Means of Egress - *The Life Safety Code*, NFPA 101, 2003 Edition
http://www.nfpa.org/aboutthecodes/aboutthecodes.asp?docnum=101

Codes cited: IBC 2009, ANSI 2003, and ADAAG 2010; Links have been provided to the 2010 U.S. Dept. of Justice ADA Standards for Accessible Design, which, for the most part, are identical to IBC and ANSI requirements.

FACILITY EVALUATED _____
DATE _____ **NAME** _____

	Accessible Parking Spaces CHECKLIST	✓
1.	There are designated accessible parking spaces located as close as possible to the accessible entrance. IBC 1106.5; ADAAG 208 *If only on-street parking is provided, answer all but #2.*	
2.	The minimum amount of accessible parking spaces is provided in the parking lot, based on the total number of available parking spaces (i.e., there should be at least one accessible parking space per 25 spaces provided in each parking lot). IBC 1106.1; ADAAG 208	
	Number of parking spaces provided per lot:	
	Number of accessible parking spaces provided per lot:	
3.	All accessible parking spaces and access aisles are located on a level surface, with the grade being no more than 1:48 (2%) in all directions. ANSI 502.5; ADAAG 502	
4.	Each accessible parking space is at least 96 inches wide. ANSI 502.2; ADAAG 502; (Refer to ***Abfd 303.02(2)*** on next page.)	
5.	(a) Number of **van-accessible parking spaces** provided: *1 per 8 for existing parking lots;*1 per 6 for new parking lots; IBC 1106.5; ADAAG 208.2.4	
	(b) Each van-accessible parking space is designated with a sign displaying the wheelchair symbol that reads "VAN ACCESSIBLE". ANSI 502.7; ADAAG 502; NH RSA 265: 73-a	
	(c) Signs are mounted on a post with the bottom of the sign at least 60 inches from the ground. ANSI 502.7; ADAAG 502	
	(d) An adjacent access aisle (a no-parking zone usually designated by diagonal striped ground paint) that is at least 96 inches (8 feet) wide, preferably provided on the passenger side of the parking space. **Abfd 303.02(3)(b)** ***NOTE: Accessible parking spaces may share an access aisle. Refer to the diagram on page 3.***	
	(e) Where possible, access aisles have ***NO PARKING*** signs. **Abfd 303.02(4)**	
6.	(a) Standard accessible parking spaces have an adjacent access aisle (a no-parking zone usually designated by diagonal striped ground paint) that is at least 60 inches (5 feet) wide, preferably located on the driver side of the parking space. **Abfd 303.02(3)(a)** ***NOTE: Accessible parking spaces may share an access aisle. Refer to the diagram on page 3.***	
	(b) Each accessible parking space is designated with a sign displaying the wheelchair symbol. ANSI 502.7; ADAAG 502; NH RSA 265: 73-a	
	(c) Signs are mounted on a post with the bottom of the sign at least 60 inches from the ground. ANSI 502.7; ADAAG 502	
	(d) Where possible, access aisles have ***NO PARKING*** signs. **Abfd 303.02(4)**	
7.	The accessible path of travel to the accessible entrance is directly connected to the access aisle and cannot be obstructed by other vehicles. ANSI 502.4 and 502.8; ADAAG 502 ***NOTE: For safety reasons, the accessible path of travel should not require individuals to walk behind parked vehicles.*** 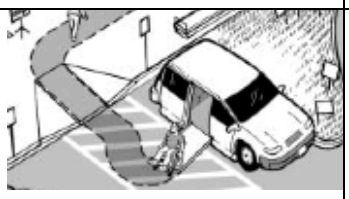	

Accessible Parking Spaces

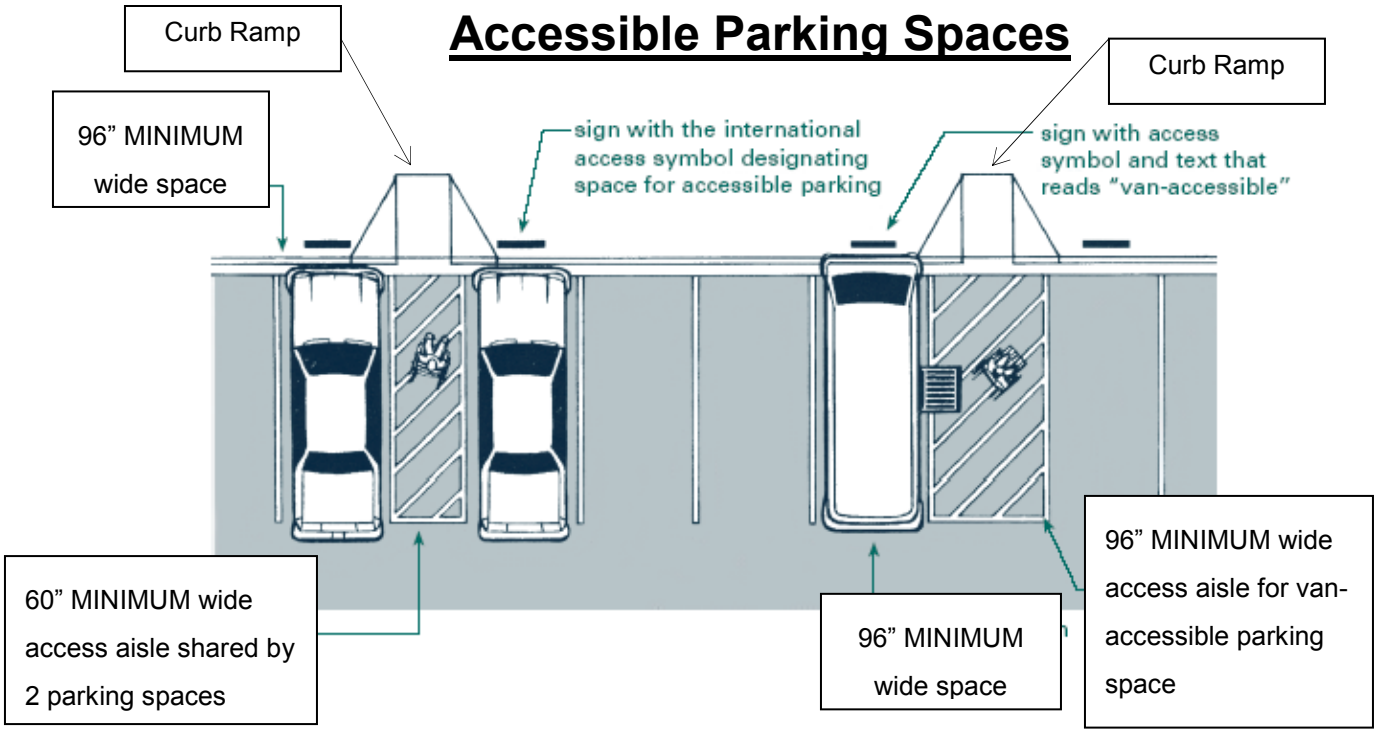

Reproduction attributed to: The Center for Universal Design, College of Design, NC State University, Raleigh, North Carolina.

NH Requirements for Accessible Parking Spaces

NH RSA 265:73-a Parking Signs; Disabled - A parking space on private or public property that is reserved for persons who are disabled shall be marked by a sign affixed to a post or a building. Said sign shall be clearly visible to anyone directly approaching that particular space.

ANSI 502.6 Where accessible parking spaces are required to be identified by signs, the signs shall include the International Symbol of Accessibility complying with Section 703.7. Such signs shall be 60 inches (1525 mm) minimum above the floor or ground surface of the parking space, measured to the bottom of the sign.

AB Code - Abfd 303.02

(2) Replacement of ICC/ANSI A117.1, Section 502.2, Vehicle Space Size, with the following text: "Car and van parking spaces shall be 96 inches (2440 mm) minimum in width."

(3) Replacement of ICC/ANSI A117.1, Section 502.4.2, Width, with the following text:
   a. Access aisles serving car parking spaces shall be 60 inches (1525 mm) minimum in width.
   b. Access aisles serving van parking spaces shall be 96 inches (2440 mm) minimum in width.

(4) The addition to ICC/ANSI A117.1, Section 502.4.4, Marking, of the following text:
   a. Except as provided in b. below, access aisles shall be designated by vertical 'No Parking' signs:
      1. Located at the front of the access aisle;
      2. Mounted with the bottom of the sign 60 inches (1525 mm) minimum above the floor of the access aisle.
   b. Access aisles shall not be required to be designated by vertical 'No Parking' signs when:
      1. The placement of a sign would obstruct the accessible route to the accessible building entrance;
      2. There is a non-removable physical obstacle preventing the placement of a sign;
      3. The placement of a sign would be in front of a window wall; or
      4. The placement of a sign would violate a provision of IBC 2006 or a provision of ICC/ANSI A117.1 2003.

Exterior Accessible Path of Travel From Sidewalks/Parking Lot to Accessible Entrance CHECKLIST		✓
1.	From the sidewalk, or from the parking space access aisle, to the accessible entrance, the path of travel is firm, stable and slip-resistant, with a smooth walking surface. ANSI 302.1; ADAAG 302.1	
2.	If there are grated openings in the path of travel, they are small enough so that a ½-inch sphere cannot pass through, and the long dimension of the opening is perpendicular to the dominant direction of travel. ANSI 302.3; ADAAG 302.3 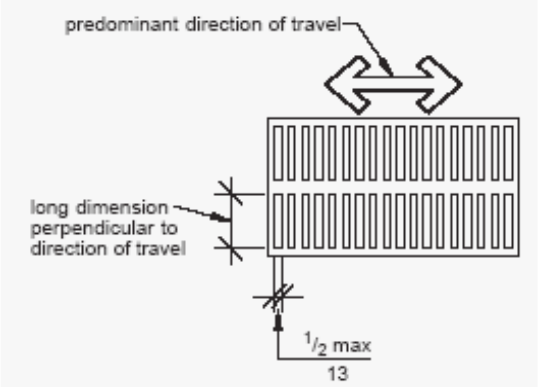 	
3.	The path of travel is at least 36 inches wide. ANSI 403.5; ADAAG 403.5.1	
4.	Overhead or wall-mounted signs, tree branches, and other objects do not protrude more than 4 inches into the path of travel. ANSI 307.2; ADAAG 307 *If NO, answer (a), (b), and (c). If YES, skip to #5.* 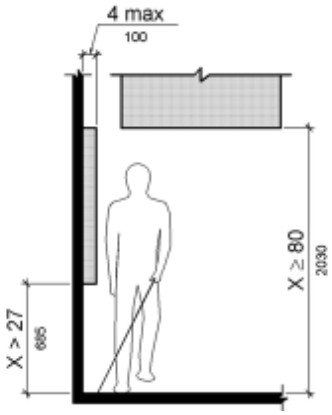 For any objects they are:	
	(a) Mounted lower than 27 inches from the floor.	
	(b) Mounted higher than 80 inches from the floor.	
	(c) **If NO to (a) or (b),** can the object(s) be removed or can the route be changed to avoid the object(s)? ***If NO, explain:***	

5.	If there are any curbs, curb ramps are provided. *If no curbs or if no curb ramps are provided, skip to #9.* ***Refer to the diagram on next page.*** ANSI 403.4 & 303; ADAAG 403.4 & ADAAG 303	
6.	The curb ramp is at least 36 inches wide, excluding the flared sides. ANSI 406; ADAAG 406	
7.	The slope of the curb ramp is no steeper than 1:12 (8.3%)**.** ***Note:*** *1:12 means there is one inch of rise in vertical height for every 12 inches of run in horizontal length.* ANSI 406; ADAAG 406	
8.	Where a curb ramp transitions from a sidewalk to a street, there are detectable warnings. ***Note:*** *Detectable warnings must consist of truncated domes (raised bumps), which warn pedestrians who are blind that they are about to enter into traffic.* ANSI 406.12-13-14, ***as amended***; Abfd 303.02 (1)	
9.	(a) Other than curbs, the path of travel does not have abrupt changes in level that are over ¼-inch in height. ***Refer to the diagram on next page.*** ANSI 303; ADAAG 303	
	(b) If there is a change in level more than ½-inch in height, there is a ramp. *Please complete the RAMP CHECKLIST; page 7.* ANSI 303; ADAAG 303	
10.	If a passenger loading zone is provided answer (a), (b), and (c). *If not, skip to #11.* 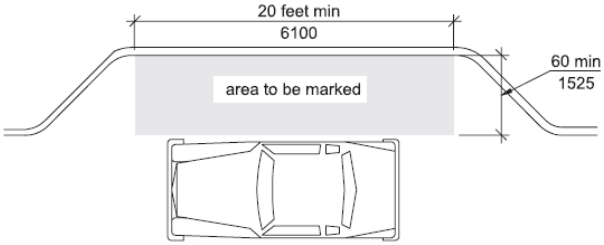 **Fig. 503.3** **Passenger Loading Zone Access Aisle**	
	(a) There is a 5-foot by 20-foot pedestrian aisle provided, parallel to the vehicle pull-up space. ANSI 503; ADAAG 503	
	(b) The pedestrian aisle and pull-up space is level (slope does not exceed 1:48). ANSI 403.3; ADAAG 403.3	
	(c) The pedestrian aisle and parking surface is stable, firm, and slip-resistant. ANSI 302.1; ADAAG 302	
11.	(a) The path of travel to the entrance is not banked or does not have a cross-slope greater than 1:48 (2%). ANSI 403.3; ADAAG 403.3	
	(b) The grade or slope of the path of travel is 1:20 (5%) or better *(1:22, 1:23, etc.)*. ***Note:*** *1:20 means there is one inch of rise in vertical height for every 20 inches of run in horizontal length.* ANSI 402.2; ADAAG 402	
	If the grade is steeper than 1:20 (1:19, 1:18), please complete the RAMP checklist, page 7.	

CHANGES IN LEVEL

ANSI 303.3 Changes in level greater than 1/4 inch in height and not more than 1/2 inch maximum in height shall be beveled with a slope not steeper than 1:2.

Fig. 303.2
Vertical Changes in Level

Fig. 303.3
Beveled Changes in Level

CURB RAMPS

ANSI 406.3 Sides of Curb Ramps. Where provided, curb ramp flares shall not be steeper than 1:10.
406.4 Width. Curb ramps shall be 36 inches wide minimum, exclusive of flared sides.
406.6 Location. Curb ramps and the flared sides of curb ramps shall be located so they do not project into vehicular traffic lanes, parking spaces, or parking space access aisles. Curb ramps at marked crossings shall be wholly contained within the markings, excluding any flared sides.

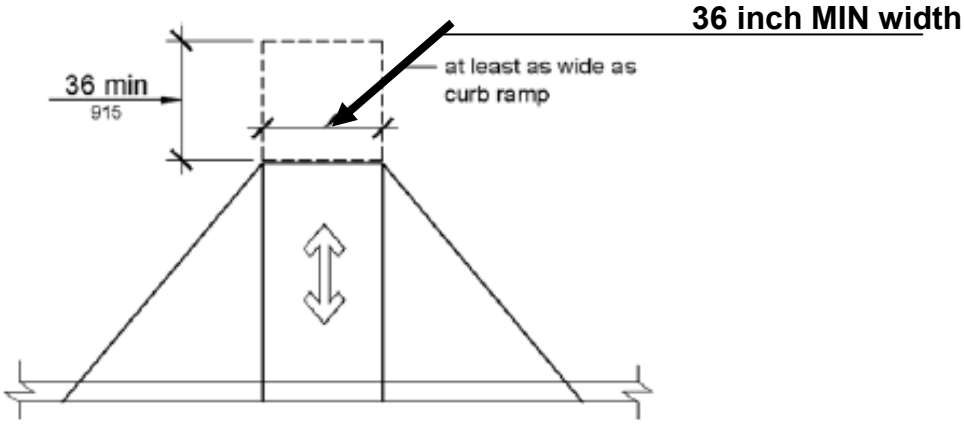

DETECTABLE WARNINGS

Abfd 303.03

(b) Clarifications of, and modifications to, ICC/ANSI A117.1 2003 shall be as follows:

(1) The installation of curb ramps with detectable warnings whenever sidewalks and curbs are constructed, reconstructed, or repaired in conjunction with new construction or substantial remodeling.

ANSI-2003 406.12 (as amended by the State of NH)
Detect able Warnings at Curb Ramps and Raised Marked Crossings. Curb Ramps and marked crossings that are raised to the same level as the adjoining sidewalk shall be preceded by a 24–inch deep detectable warning complying with Section 705, extending the full width of the marked crossing.

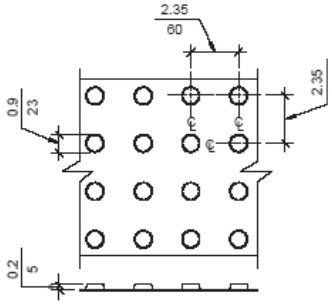

Fig. 705.3.1.1
Truncated Dome Size

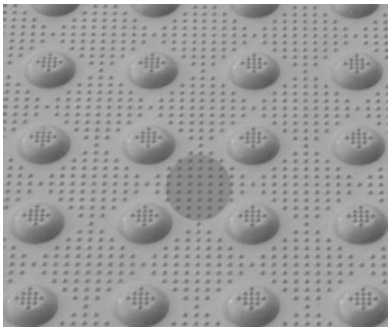

RAMPS CHECKLIST		✓
1.	(a) The **slope** of the ramp is not steeper than **1:12**. *(1:10, 1:8, etc.)* ***Note:*** *1:12 means there is one inch of rise in vertical height for every 12 inches of run in horizontal length.* ANSI 405.2; ADAAG 405.2; **ADAAG 405 for all ramp requirements**	
	(b) The cross slope of the ramp surface is not steeper than 1:48. ANSI/ADAAG 405.3	
2.	The surface of the ramp is firm, stable and slip-resistant. ANSI/ADAAG 405.4 & 302.1	
3.	The clear width of the ramp, measured between handrails, is at least 36 inches. ANSI/ADAAG 405.5 ***Please record the width of the ramp here:***	
4.	(a) At the bottom and the top of the ramp there is a level landing that is at least 60 inches long. ANSI/ADAAG 405.7 ***Please record the width of landings here.*** *Bottom: Top:*	
	(b) The landing has a grade of no more than 1:48 in all directions. ANSI 405.7.1	
	(c) Where there is a change in direction in the ramp, and/or there is more than one inclined section, there is an intermediate landing that measures 60 inches long by 60 inches wide. ANSI/ADAAG 405.7 ***Please record the dimensions of intermediate landing(s) here.*** *Width: Length:*	
5.	The maximum rise (vertical height) for each inclined section is no more than 30 inches, meaning each section is no longer than 30 feet. ANSI/ADAAG 405.6	
6.	If the rise of vertical height of the ramp is more than 6 inches, there are handrails on both sides of the ramp. ANSI/ADAAG 405.8 *If there are no handrails, skip to #8.*	
7.	(a) The handrails are sturdy and secure and do not rotate within their fittings. ANSI/ADAAG 505.9; **ADAAG 505 for all handrail requirements**	
	(b) The gripping surface of the handrails is continuous for the entire length of the ramp, including the length of any intermediate landings. ANSI/ADAAG 505.3	
	(c) The top of the gripping surface of the handrail is 34-38 inches above the surface of the ramp. ANSI/ADAAG 505.4;	
	(d) Circular handrails measure 1¼ - 2 inches in outside diameter. ANSI/ADAAG 505.7 ***Refer to the diagram on next page.*** ***List the dimensions of non-circular handrails here:***	
	(e) The handrails are mounted to provide at least 2¼ inches clearance between the wall and the handrail. NFPA 101 7.2.2.4.4.5	
	(f) The handrails extend at least 12 inches beyond the top of the inclined portion of the ramp and 12 inches beyond the bottom of the inclined portion of the ramp. ANSI/ADAAG 505.10	
8.	If the ramp or the landing has a vertical drop-off on either side, the floor surface extends 12 inches beyond the handrail or a curb is provided. ANSI/ADAAG 405.9 ***Refer to the diagram on next page.***	

HANDRAIL CROSS SECTIONS

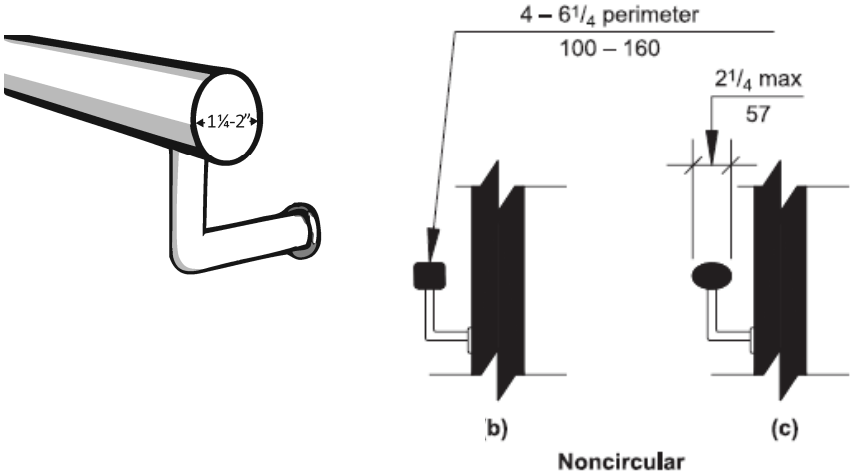

RAMP DETAILS

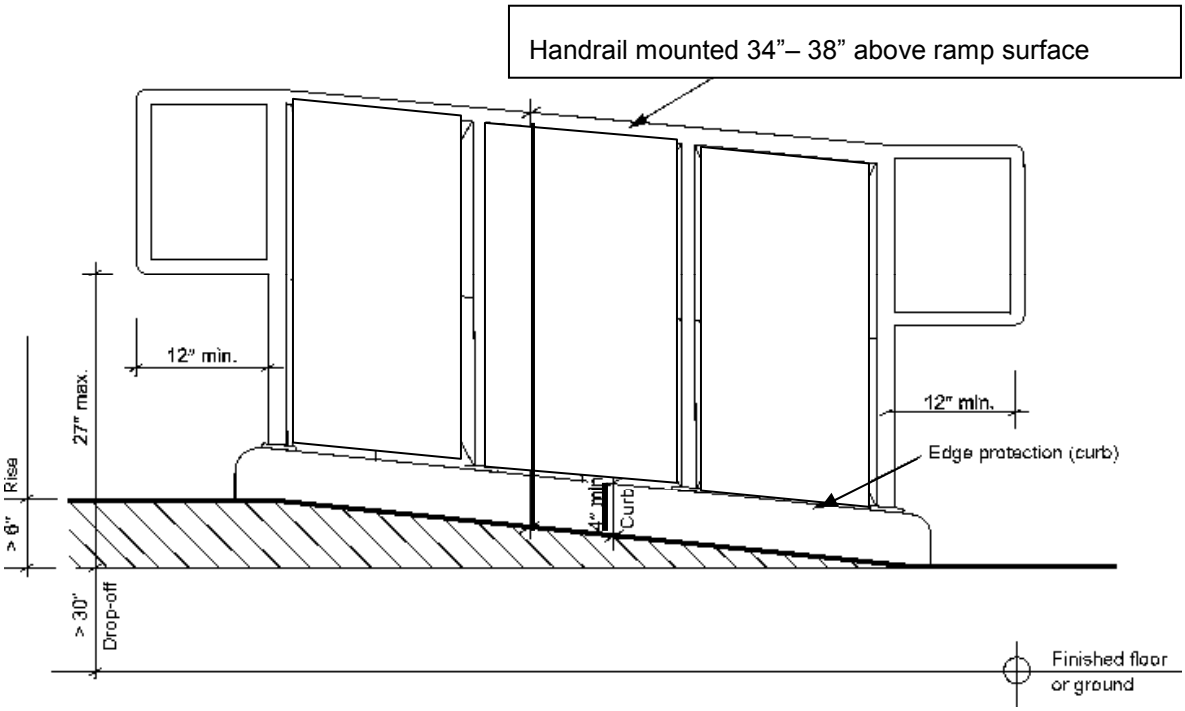

CURB OR BARRIER EDGE PROTECTION

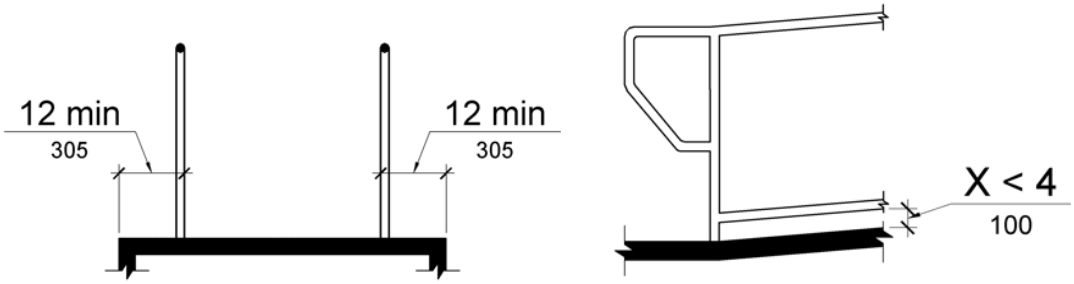

STAIR CHECKLIST		✓
1.	There are handrails on both sides of the stair. If none, skip to #3. ANSI 504.6 & ANSI 505; ADAAG 504.6	
2.	(a) The handrails are sturdy and secure and do not rotate within their fittings. ANSI/ADAAG 505.9; **ADAAG 505 for all handrail requirements**	
	(b) The gripping surface of the handrails is continuous for the entire run of the stair, including the length of any intermediate landings. ANSI/ADAAG 505.6	
	(c) The top of the gripping surface of the handrail is 34 - 38 inches above the riser surface. ANSI/ADAAG 505.4	
	(d) Circular handrails measure 1¼ - 2 inches in outside diameter. ANSI/ADAAG 505.7 ***List the dimensions of non-circular handrails here:***	
	(e) The handrails are mounted to provide at least 2¼ inches clearance between the wall and the handrail. NFPA 101, section 7.2.2.4.4.5	
	(f) The handrails extend 12 inches beyond the top and the bottom of the stairs. ANSI/ADAAG 505.10	
3.	(a) The steps (risers) are of the same height, depth, and width for the entire run of the stair. ANSI 504.2; **ADAAG 504 for all stair requirements**	
	(b) The height of the step (riser) is at least 4 inches but no more than 7 inches. ANSI/ADAAG 504.2 ***Record riser height here:***	
	(c) The tread depth of each step is at least 11 inches. ANSI/ADAAG 504.2 ***Record tread depth here:***	
	(d) The width of each step is at least 36 inches, measured between handrails. NFPA 101, section 7.2.2.2.1 ***Record width here:***	
	(e) There are backs for each step, meaning there are no open risers. ANSI/ADAAG 504.3	

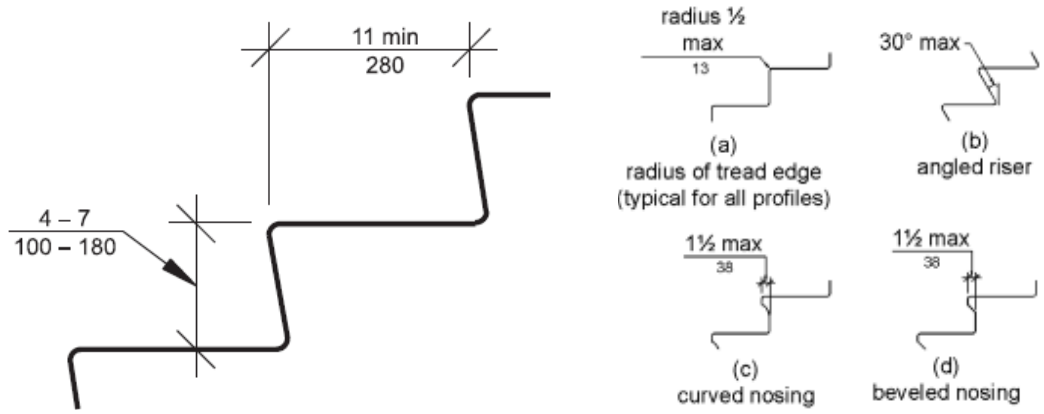

Accessible Entrances and Exterior Doors CHECKLIST		✓
1.	(a) There is at least one accessible entrance directly connected to the exterior accessible route. For facilities built after October 2007, if there is more than one public entrance, at least 60% of the public entrances are accessible. IBC 1104; ADAAG 206 (scroll to 206.4.1)	
	(b) Where there are inaccessible entrances, there are signs clearly posted at each inaccessible entrance directing individuals to the nearest accessible entrance. IBC 3409.8.1; ADAAG 216 (scroll to 216.6)	
2.	As now required by NH Amendment to IBC 1105 for new construction and alterations to entrances, at least one accessible public entrance is to be equipped with a power door opener. If a power door opener is provided, the control for the opener is in an accessible location, mounted no higher than 48 inches from the floor. ANSI 404.3	
3.	(a) The ground in front of the door is level, meaning that the grade that does not exceed 1:48**.** ANSI 404.2.3.5; ADAAG 404.2.4.4 **ADAAG 404 for all door requirements**	
	b.) For a door that pulls open, this area measures at least 60 inches in length. ANSI 404.2.3; ADAAG 404.2.4 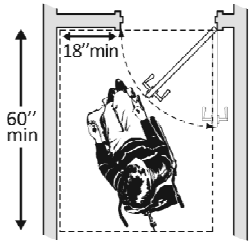 ***For additional door clearances, refer to the diagrams on page 12.***	
4.	For a single door that pulls open, there is at least 18 inches of clear floor space outside the door on the handle side of the door. ANSI 404.2.3.1; ADAAG 404.2.4	
5.	At least one door, or one side of a double leaf door, provides at least 32 inches clear passage width when the door is open 90 degrees. ANSI 404.2.2; ADAAG 404.2.3	
6.	For both sides of the door a.) The door hardware is usable with one hand without tight grasping, pinching, or twisting of the wrist, such a lever or pull handle, or a panic bar. ANSI 404.2.6; ADAAG 404.2.7 ***Refer to the diagrams on page 11.***	
	b.) The hardware is mounted between 34 and 48 inches from the floor. ANSI 404.2.6; ADAAG 404.2.7	
7.	If there is a closer, meaning the door closes by itself, the door take at least 5 seconds to close. ANSI 404.2.7; ADAAG 404.2.8	
8.	If there is a raised threshold, it is no higher than 1/2 inch at the door and is beveled on both sides. ANSI 404.2.4; ADAAG 404.2.5	
9.	If there are doors in a series that must be opened one *after* the other, the clear floor space between the doors measures at least 48 inches in length plus the width of any door swinging into the space between the doors (plus at least 36 inches). ANSI 404.2.5; ADAAG 404.2.6 ***Refer to the diagrams on page 11.***	

10.	For the interior or second door of two doors in a series, the force required to operate the second door does not exceed five (5) pounds. ANSI 404.2.8; ADAAG 404.2.9	

DOOR HARDWARE

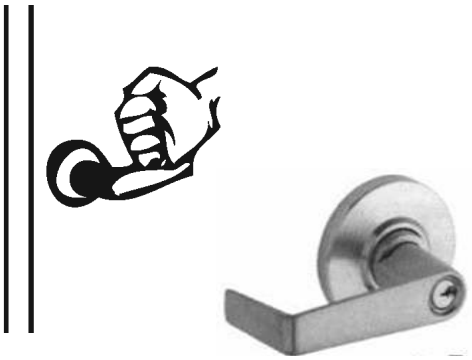

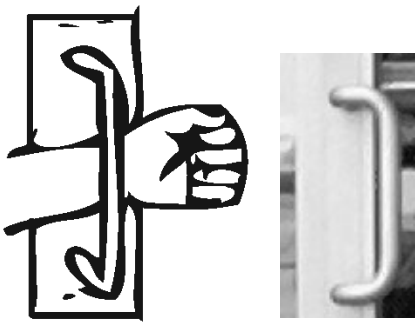

DOORS IN A SERIES

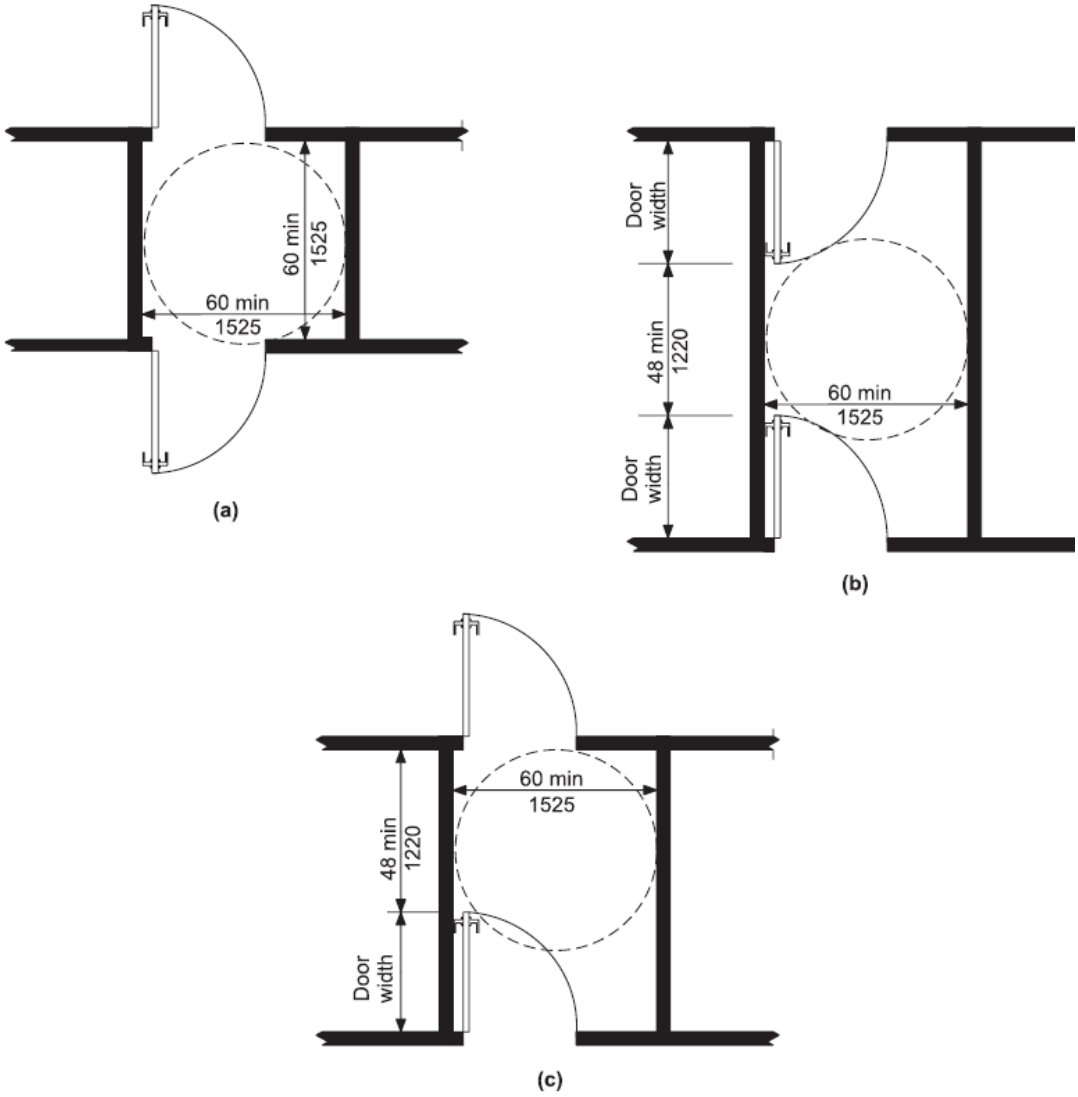

DOOR CLEARANCES

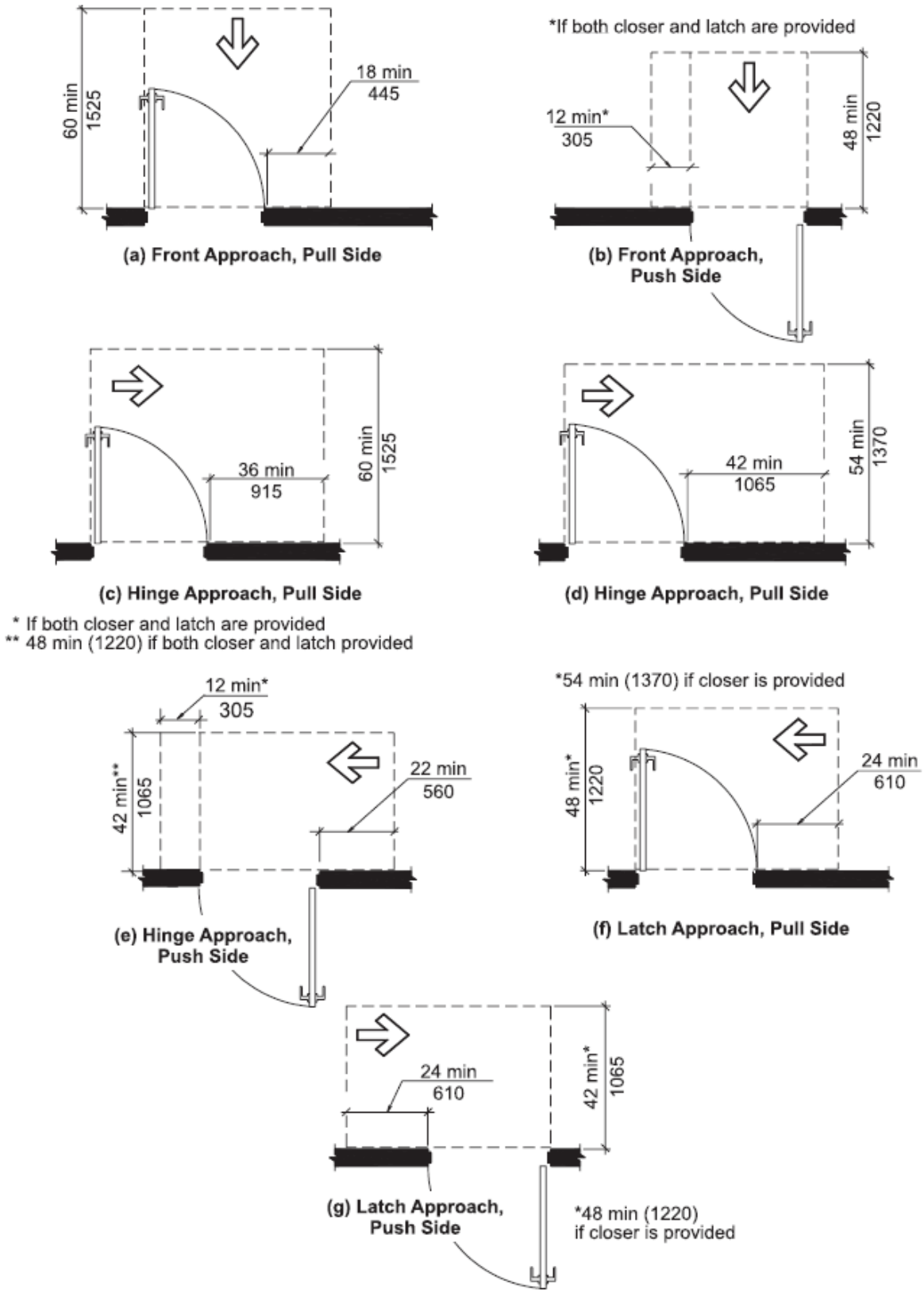

MINIMUM CLEAR FLOOR SPACE

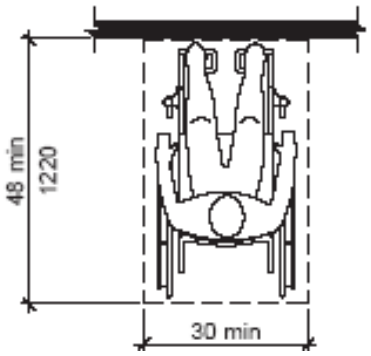

TURNING SPACE

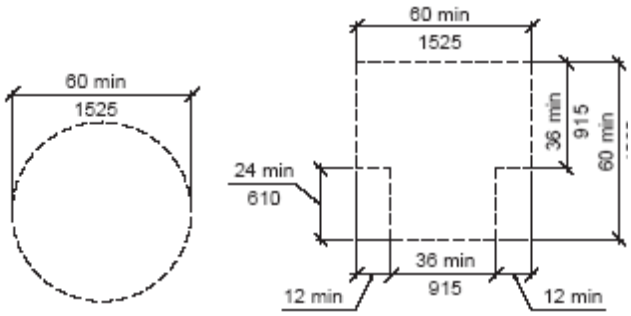

REACH RANGES

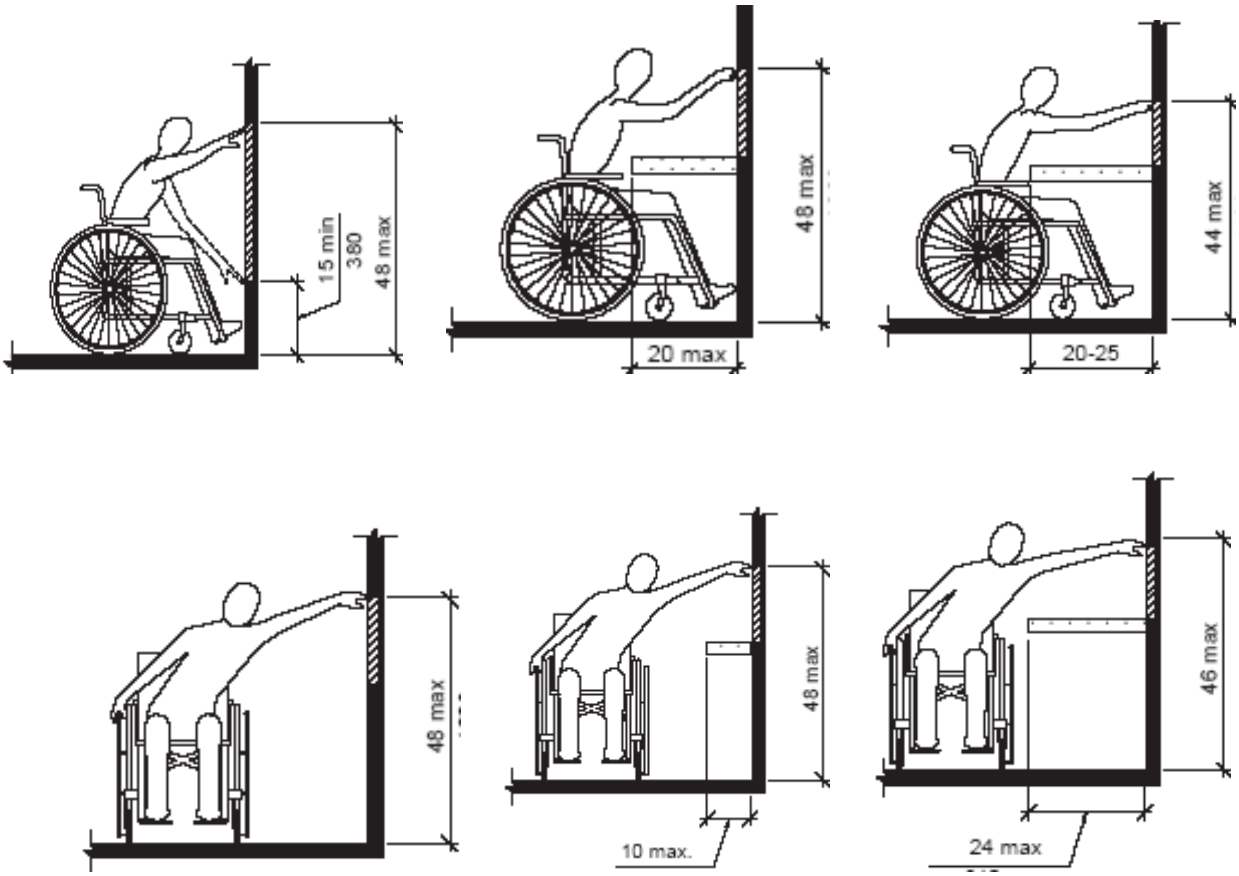

Accessible Reception – Service Counters		✓
1.	For a reception/service counter that is not used for writing, there is a 36-inch portion that is no higher than 36 inches from the floor. ANSI 904; ADAAG 904	
2.	(a) For a counter where the surface is used for writing, there is a 36-inch long portion with 27 inches open space for knee clearance beneath the counter. ANSI 902; ADAAG 902 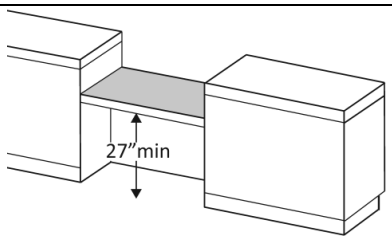	
	(b) The top of the counter is at least 28 but no higher than 34 inches above the floor. ANSI 902; ADAAG 902	
	(c) The minimum clear floor space of 30 inches by 48 inches is provided, centered in front of the counter. ***Refer to the diagram on page 13.*** ANSI 902; ADAAG 902	

Interior Accessible Path of Travel CHECKLIST		✓
1.	(a) There is an accessible route that connects the accessible entrance to all interior areas (including all public areas, restrooms, and service or program areas). ANSI 402; ADAAG 402	
	(b) The accessible route is at least 36 inches wide. ANSI 403.5; ADAAG 403.5.1	
2.	(a) The walking surface is firm, stable and slip-resistant. ANSI 302.1; ADAAG 302.1	
	(b) The accessible route is free of abrupt changes in level such as raised floorboards, thresholds, etc., over ½-inch in height. ***Note: Changes in level between ¼ inch and ½ inch must be beveled.*** ANSI 403.4; ADAAG 403	
	(c) If there is a change in level more than ½-inch in height, there is a ramp. ANSI 303; ADAAG 303	
3.	Does the route from the entrance throughout the building (including all public areas, restrooms, and service areas, etc.) have any changes in floor level requiring the use of a ramp, stair, lift or elevator? ***CIRCLE ONE:*** **YES or NO** *If Yes with a **RAMP,** complete the RAMPS CHECKLIST, page 7.* *If Yes with a **STAIR**, complete the STAIR CHECKLIST, page 9.* *If Yes with a **LIFT,** complete the PLATFORM LIFTS CHECKLIST, page15.* *If Yes with an **ELEVATOR,** complete the ELEVATOR CHECKLIST, page15.*	

PLATFORM LIFTS CHECKLIST - ANSI / ADAAG 410		✓
1.	The lift is operational at the time of the survey.	
2.	Assistance is not required to enter and exit the lift.	
3.	Assistance is not required to operate the lift.	
4.	There is a way to notify authorities that assistance is needed to use the lift prior to entering.	
5.	There is a way to notify authorities that assistance is needed once in the lift with the door closed.	
6.	The change in level from the floor to the lift surface is ramped or beveled.	
7.	The clear floor space of the platform lift is at least 30 inches by 48 inches.	
8.	Controls and operating mechanisms are mounted no more than 48 inches from the lift platform surface.	
9.	The controls or operating mechanisms are usable with one hand without grasping, pinching, or twisting.	

ELEVATOR CHECKLIST - ANSI / ADAAG 407 See also LULA Elevators ADAAG 408		✓
1.	The elevator is functioning at the time of the survey.	
2.	The elevator call buttons are mounted at 42 inches on-center above the floor in a location that is easy to access.	
3.	The elevator door has a clear opening of at least 36 inches.	
4.	The interior of the elevator car has one of these clear floor space requirements: Door on center - 51” deep x 80” wide or 60” x 60” Door off center - 80” deep x 54” wide or 51” deep x 68” wide. ***If other, list dimensions here:***	
5.	The highest control buttons in the elevator cab are mounted no more than 48 inches from the floor.	
6.	There are raised letters and Braille characters used to identify each floor button and each control.	
7.	There are signs mounted on both sides of the elevator hoist-way door opening, centered at 60 inches above the floor that designate the floor with 2-inch minimum-height raised letters and Braille characters.	
8.	There is an emergency communication system provided inside the elevator with both audible and visual features.	
9	There are audible tones at the elevator call button location that signify a call has been registered.	
10.	The interior of the elevator car is equipped with audible tones that: (a) Sound once for up direction.	
	(b) Sound twice for down direction.	

Accessible Interior Path of Travel - Obstacles		✓
1.	Objects that protrude into the path of travel such as fire extinguishers, signs, drinking fountains, potted plants, furniture, etc., extend less than 4 inches into the path of travel. *If NO, answer #2 (a) and 2(b), and #3. If YES, skip to #4.* 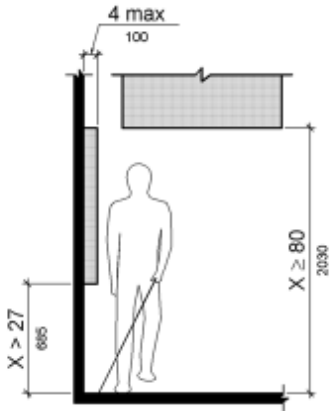 ANSI 307.2; ADAAG 307	
2.	For any protruding objects they are: (a) Mounted lower than 27 inches from the floor.	
	(b) Mounted higher than 80 inches from the floor.	
3.	If NO to #2a or #2b, can the object(s) be removed or can the route be changed to avoid the object(s)? ***If NO, explain:***	
4.	If there any open staircases along these routes, there are barriers to prevent a person from walking under the stairs. 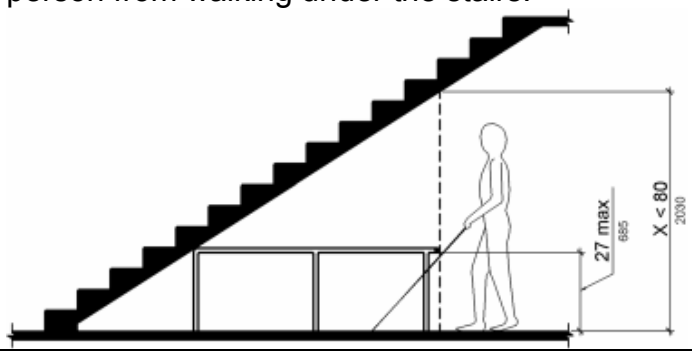 	
5.	Temporary carpets or mats are firmly secured. ANSI / ADAAG 302.2	
6.	Carpets or mats are no thicker than ½ inch. ANSI / ADAAG 302.2 	

	Accessible Interior Path of Travel and Interior Doors	✓
1.	At least one door, or one side of a double leaf door, provides at least 32 inches clear passage width when the door is open 90 degrees. ANSI 404.2.2; **ADAAG 404 for all door requirements**	
2.	If there is an automatic door opener (not required), the control for the opener is in an accessible location and it is mounted no higher than 48 inches from the floor. ANSI 404.3	
3.	For both sides of the door, the hardware is operable by a single hand without tight grasping, pinching, or twisting of the wrist (Lever or pull handle, or a panic bar). ANSI 404.2.6 ***Refer to the diagrams below.***	
4.	For both sides of the door, the hardware is mounted between 34 and 48 inches from the floor. ANSI 404.2.6 ***Refer to the diagram below.***	
5.	For a single door that pulls open, there is clear maneuvering floor space in front of each door and at least 18 inches of clear floor space outside the door on the handle side of the door. ANSI 404.2.3.1 ***Refer to the diagrams on page 12.***	
6.	No more than 5 pounds force to push or pull open the door. *Note: Fire doors must comply with NFPA 101.* ANSI 404.2.8	
7.	If there is a closer, meaning the door closes by itself, the door takes at least 5 seconds to close. ANSI 404.2.7	
8.	If there are doors in a series that must be opened one *after* the other, the clear floor space between the doors measures at least 48 inches in length plus the width of any door swinging into the space between the doors (at least 7 feet). ANSI 404.2.5 ***Refer to the diagrams on page 11.***	
9.	If there is a raised threshold, it is no higher than 1/2 inch at the door and is beveled on both sides. ANSI 404.2.4	

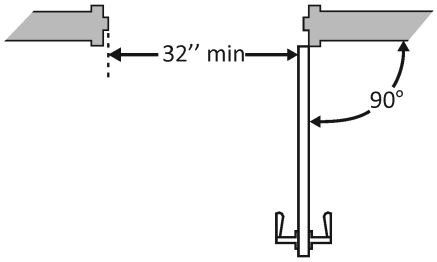

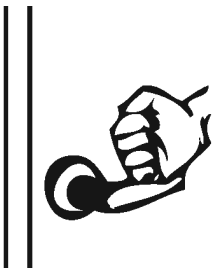

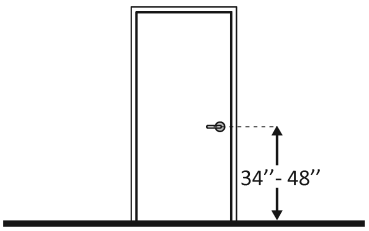

Accessible Toilet Rooms Checklist ANSI / ADAAG 603		✓
1.	If there are audible (horn or speaker) fire alarms in the building, there are visual (strobe) alarms **in all toilet rooms.** ADAAG 215	
2.	There is an accessible route to the toilet room. IBC 1104.2	
3.	There is appropriate signage identifying the restroom (Unisex, Male, or Female) with the wheelchair symbol, mounted on the exterior wall, adjacent to the door handle, with Braille and raised letters and symbols. ANSI / ADAAG 703	
4.	The clear width for the door opening is at least 32 inches, measured when the door is open 90 degrees. ANSI 404.2.2; **ADAAG 404 for all door requirements**	
5.	If there is a raised threshold, it is no higher than ½ inch at the door and is beveled on both sides. ANSI 404.2.4	
6.	If there is an automatic door opener (not required), the control is in an accessible location and it is mounted no higher than 48 inches from the floor. ANSI 404.3	
7.	For both sides of the door (a) The hardware is operable by a single hand without tight grasping, pinching, or twisting of the wrist (lever or pull handle). ANSI 404.2.6 ***Refer to the diagrams on page 11.***	
	(b) The hardware is mounted between 34 and 48 inches from the floor. ANSI 404.2.6	
8.	For a single door that pulls open, there is clear maneuvering floor space in front of each door and at least 18 inches of clear floor space beyond the door on the handle side of the door. ANSI 404.2.4.1 ***Refer to the diagrams on page 12.***	
9.	(a) To push or pull open the accessible door, no more than 5 pounds force is needed. ANSI 404.2.8	
	(b) If there is a closer, meaning the door closes by itself, the door take at least 5 seconds to close. ANSI 404.2.7	
10.	If there are doors in a series that must be opened one *after* the other, the clear floor space between the doors measures at least 48 inches in length plus the width of any door swinging into the space between the doors (plus at least 36 inches). ANSI 404.2.5 ***Refer to the diagrams on page 11.***	
11.	For single-use toilet rooms: If the door swings into the toilet room, there is clear floor space provided beyond the swing of the door that measures at least 30 x 48 inches. ANSI / ADAAG 603.2.3 ***Please record the dimensions of the toilet room here:***	

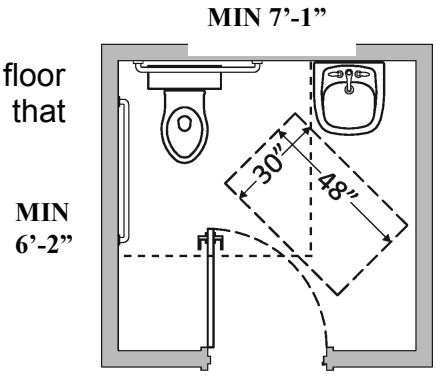

For more details, refer to the single-use toilet room plan, found on the last page of this document.

If there are toilet stalls provided, answer items #1 – #6.		✓
Total number of stalls **MALE =** **FEMALE =**	Number of Accessible Stalls **MALE =** **FEMALE =**	
1.	There is a clear path of travel to the accessible stall that is at least 36 inches wide. ANSI / ADAAG 403	
2.	The clear width for the accessible stall door opening is at least 32 inches. ANSI 404.2.2; **ADAAG 404 for all door requirements**	
3.	The accessible stall door opening pressure is 5 pounds or less. ANSI 404.2.8	
4.	(a) The accessible stall door lock is operable by a single hand and there are door pull handles on both sides of the stall door. ANSI / ADAAG 309	
	(b) The accessible stall door hardware, and, if available, the coat hook, are mounted no higher than 48 inches from the floor. ANSI / ADAAG 308	
5.	If the accessible stall door has automatic closing hinges, the door takes at least 5 seconds to close. ANSI 404.2.7	
6.	If the total number of water closets (toilets) and urinals (where provided) is 6 or more, including the accessible stall, there is also an *ambulatory accessible* stall. ***If there are less than 6 fixtures, skip.*** IBC 1109.2.2; ADAAG 213.3.1	
	(a) The stall is at least 36 inches wide and at least 60 inches deep. ANSI 604.9/**ADAAG 604.8.2**	
	(b) The door does not swing into the stall.	
	(c) There are grab bars installed on both sides of the water closet.	
	(d) The centerline of the water closet is 17-19 inches from each side wall.	
	(e) The dispenser is mounted 7- 9 inches forward of edge of the toilet bowl.	

GRAB BARS

Ambulatory Accessible Stalls

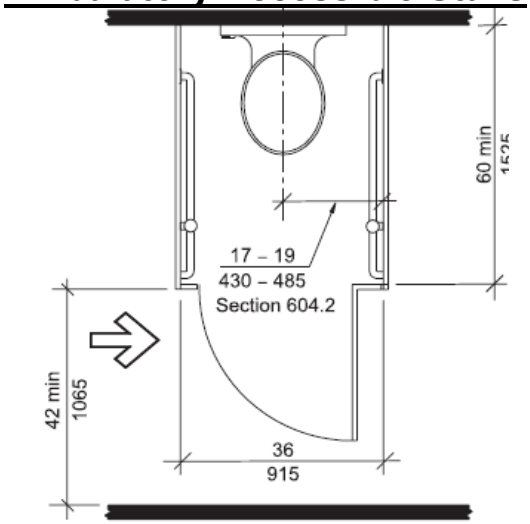

Toilet Compartment Doors

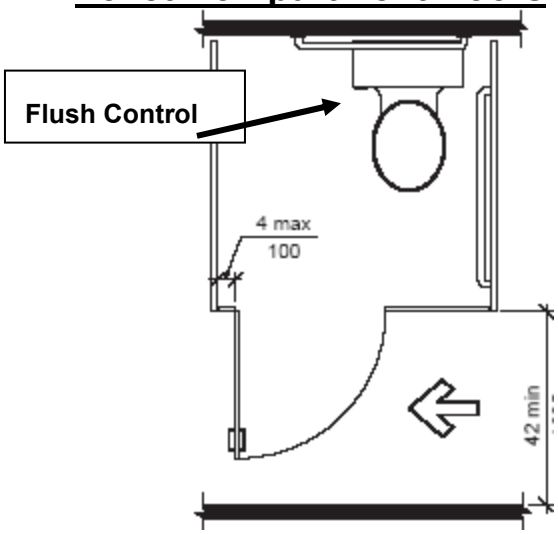

	Water Closet (Toilet) Elements	✓
1.	The distance from the centerline of the water closet to the side wall is 16-18 inches. ANSI/**ADAAG 604 for all water closet requirements**	
2.	The height of the toilet seat is between 17 and 19 inches from the floor. ANSI 604.4	
3.	The water closet flush control is located on the open side of the room. ANSI 604.6 ***Refer to the diagram on next page.***	
4.	The toilet paper dispenser is mounted 7- 9 inches forward of edge of the toilet bowl. ANSI 604.7 ***Refer to the diagram on next page.***	
5.	(a)The clear floor space from the centerline of the water closet to any other fixture along the same wall is at least 42 inches in length. ANSI 604.3.1	
	(b) The clearance at the water closet measured perpendicular to the side wall is at least 60 inches. ***Refer to the diagram on next page.***	
	(c) The clearance at the water closet measured perpendicular to the rear wall is at least 56 inches. ***Refer to the diagram on next page.***	
6.	(a) There is one horizontal side wall grab bar mounted 33-36 inches above the floor that is 42 inches long, mounted no more than 12 inches away from the rear wall, extending at least 54 inches from the rear wall. ANSI 604.5.1 ***Refer to the diagrams below.***	
	(b) For new water closets (8/17/2007), there is a **vertical side wall grab bar** that is at least 18 inches long, mounted with the bottom of the bar located between 39 and 41 inches above the floor, and with the centerline of the bar located between 39 and 41 inches from the rear wall. ANSI 604.5.1 ***Refer to the diagrams below.***	
	(c) There is one horizontal rear wall grab bar that is 36 inches long, with 12 inches of length of that bar provided on the transfer side of the water closet. ANSI 604.5.2 ***Refer to the diagrams below.***	

ANSI GRAB BAR LOCATIONS

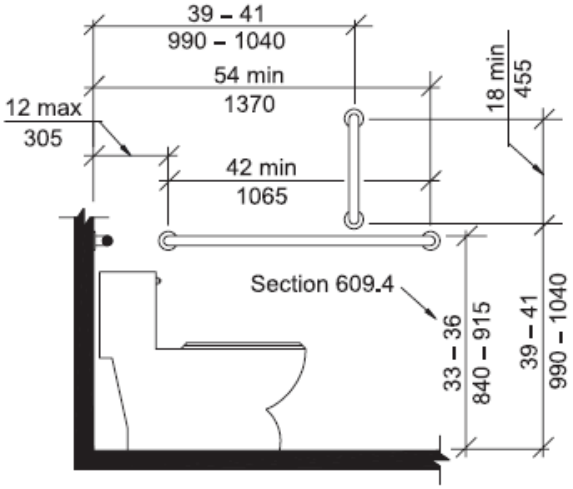

Fig. 604.5.1
Side Wall Grab Bar for Water Closet

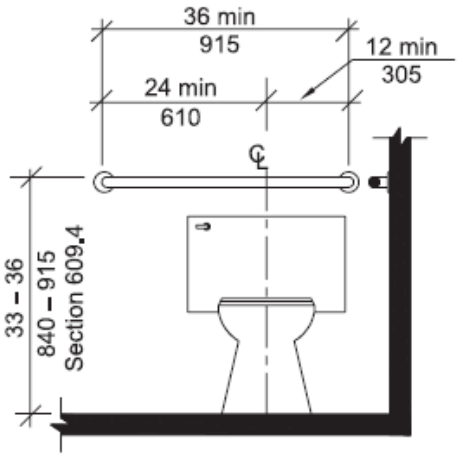

Fig. 604.5.2
Rear Wall Grab Bar for Water Closet

ANSI WATER CLOSET CLEAR FLOOR SPACE

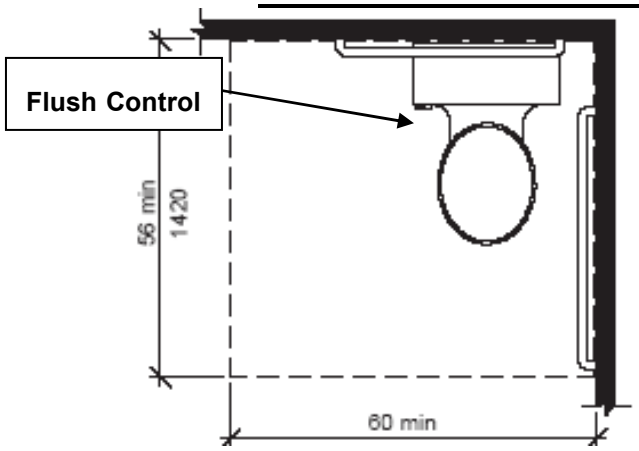

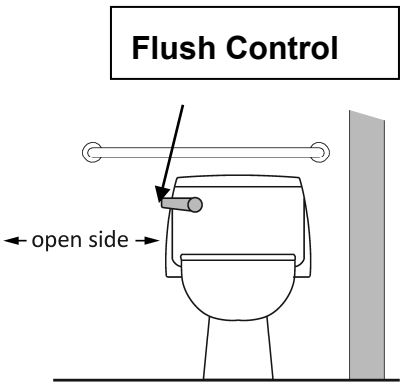

ANSI WATER CLOSET DISPENSER LOCATIONS

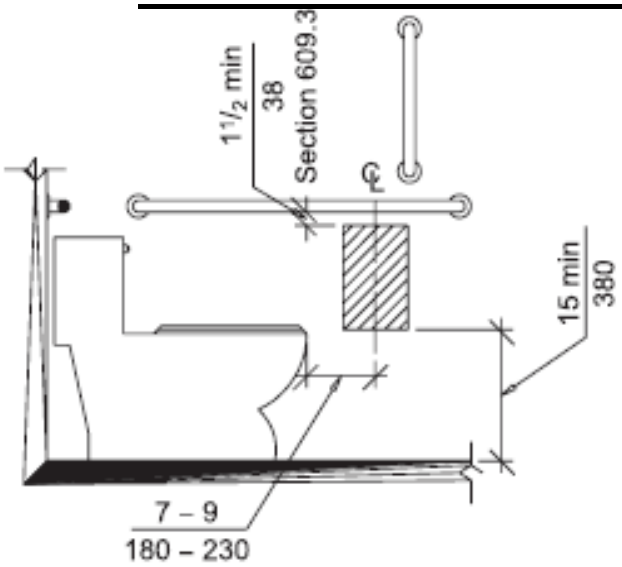

(a) Below Grab Bar

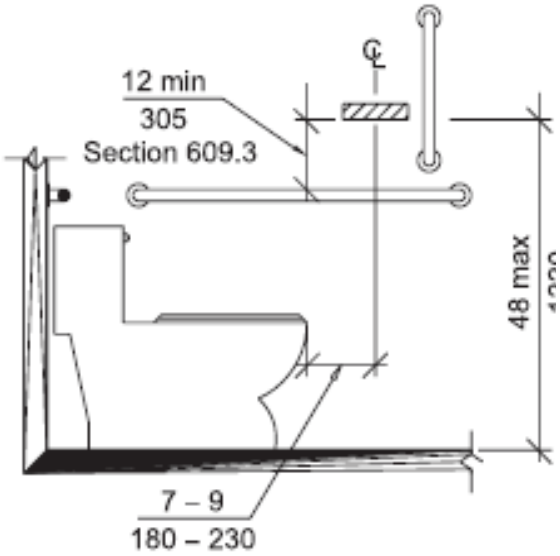

(b) Above Grab Bar

Accessible Urinals – ANSI / ADAAG 605		✓
1.	If there are two or more urinals provided, at least one urinal is accessible. IBC 1109.2 (Exception 4); ADAAG 213.3	
2.	The rim is a maximum of 17 inches above the floor.	
3.	There is clear floor space measuring 30 inches by 48 inches provided for a forward approach.	
4.	The flush control is mounted no more than 44 inches above the floor.	

Accessible Lavatory (Sink) Elements		✓
1.	There is clear floor space that is at least 30 inches wide by 48 inches long, provided for a forward approach. ***Note:*** *14-17 inches of the 48 inches may be part of the knee and toe clearance beneath the lavatory.* ANSI 606.2; **ADAAG 606 for all lavatory requirements**	
2.	There is knee clearance of at least 27 inches provided from the floor underneath the lavatory to the bottom of the sink bowl. ANSI 606.2 ***Refer to the diagrams below.***	
3.	The top of lavatory is no higher than 34 inches from the floor. ANSI 606.3 ***Refer to the diagrams below.***	
5.	The pipes beneath the lavatory are insulated. ANSI 606.6	
6.	The lavatory faucets are operable by a single hand (paddle or lever type faucets). ANSI 606.7; ANSI / ADAAG 309	
7.	(a) All dispensers are mounted no higher than 48 inches from the floor. ANSI / ADAAG 308 ***Refer to the diagrams on page 13.***	
	(b) The control parts of dispensers are usable with one hand and do not require grasping, pinching, or twisting of the wrist. ANSI / ADAAG 309	
Note of caution: *Wall-mounted objects **lower than 80 inches** from the floor that are **12 inches** or less **in front of the lavatory** interfere with the "head" clearance of a person using a wheelchair and could cause personal injury and/or property damage.*		
8.	Where a mirror is provided, the bottom edge of the reflecting surface is no higher than 40 inches above the floor; ANSI 603.3	

LAVATORY CLEARANCES

Toe Clearance

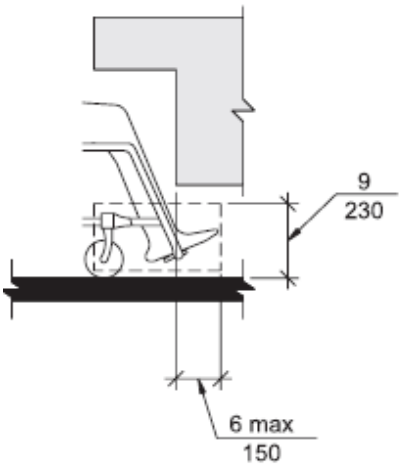

Knee Clearance

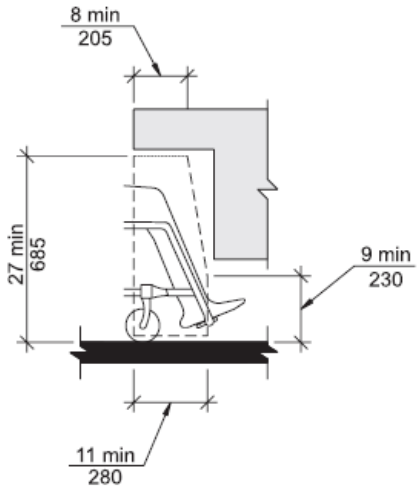

Lavatory Height

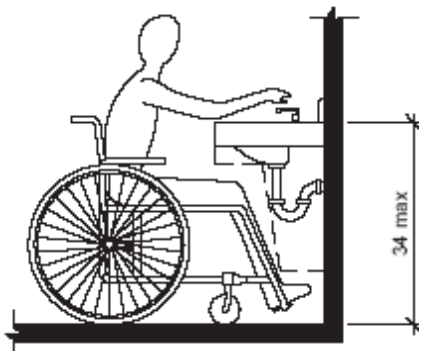

Where Drinking Fountains Are Provided ANSI / ADAAG 602		✓
1.	The minimum clear floor space of 30 inches by 48 inches is provided, centered in front of the fountain. ***Refer to the diagrams below.***	
2.	The spout is no higher than 36 inches from the floor.	
3.	If the water fountain is open beneath, it is either recessed or, if it protrudes more than 4 inches into the path of travel, a rubber mat has been placed under the water fountain to provide a touch-on-cane detectable warning. ***Refer to the diagram and photograph below.***	

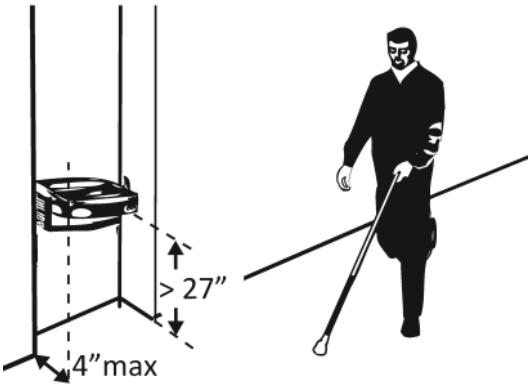

Rubber Mat

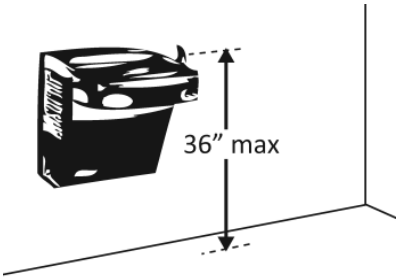

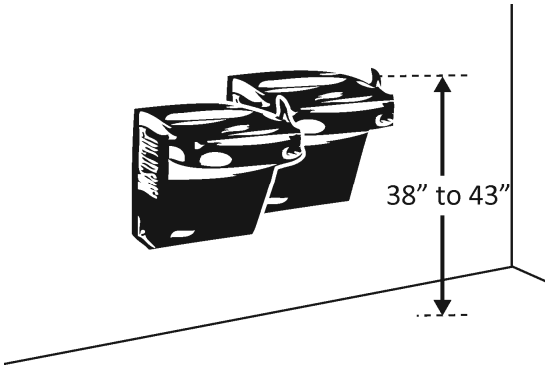

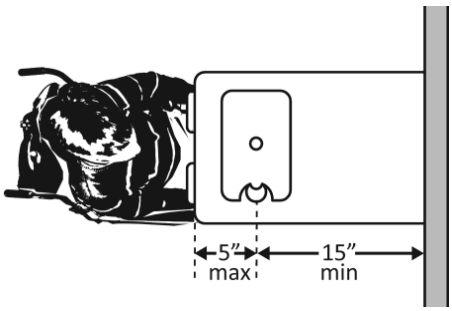

Where Fire Alarms and/or Fire Extinguishers Are Provided ADAAG 215 and ANSI / ADAAG 702		✓
1.	If there are audible (horn or speaker) fire alarms in the building, there are visual (strobe) alarms in all toilet rooms, all public-use areas, and all employee common-use areas.	
2.	(a) Where manual pull stations are provided, they are located within reach range, 15-48 inches from the floor. *Refer to the diagrams on page 13.*	
	(b) The manual pull station is operable by a single hand and does not require grasping or pinching, or twisting of the wrist.	
3.	(a) Where provided, fire extinguishers that are wall-mounted are located within reach range, 15-48 inches from the floor. *Refer to the diagrams on page 13.*	
	(b) Fire extinguishers that are wall-mounted do not protrude more than 4 inches into the path of travel.	

Where Room Signs Are Provided ADAAG 216 and ANSI / ADAAG 703		✓
1.	All permanent rooms where the use is not likely to change, such as conference and meeting rooms, courtrooms, toilet rooms, etc., have signs with Braille and raised letters and symbols posted on the wall adjacent to the handle side of the door. Exit signs are included in this requirement. 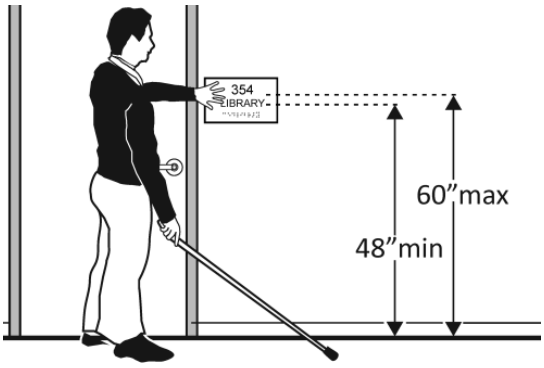	
2.	Where room numbers are posted, signs with Braille numbers are also provided.	

	Where Public Telephones Are Provided - ANSI / ADAAG 704	✓
1.	Clear floor space of 30 inches by 48 **inches** is provided, centered on the telephone. 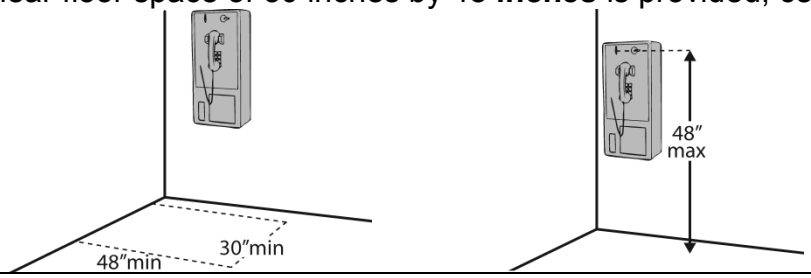	
2.	All operable parts are located no higher than 48 inches from the floor. ***Refer to the diagrams on page 13.***	
3.	There is a volume control switch.	
4.	There is a sign noting that a TTY is available. 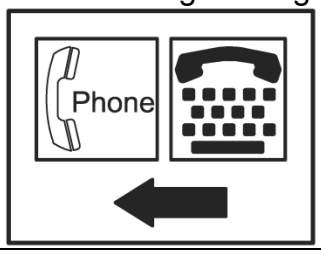	

	Employee Break Rooms with Kitchens ANSI / ADAAG 804	✓
1.	Where a kitchen or kitchenette is provided with a sink, the top of the sink is no higher than 34 inches from the floor and there is clear floor space that is at least 48 inches long, parallel to and centered on the sink that is also at least 30 inches wide.	
2.	If a stove or cook top is also provided, then there is a clear floor space that is at least 30 inches wide by 48 inches long centered on the sink, with at least 27 inches clearance beneath the sink. ***Refer to Accessible Lavatories (Sink) Elements, page 22.***	

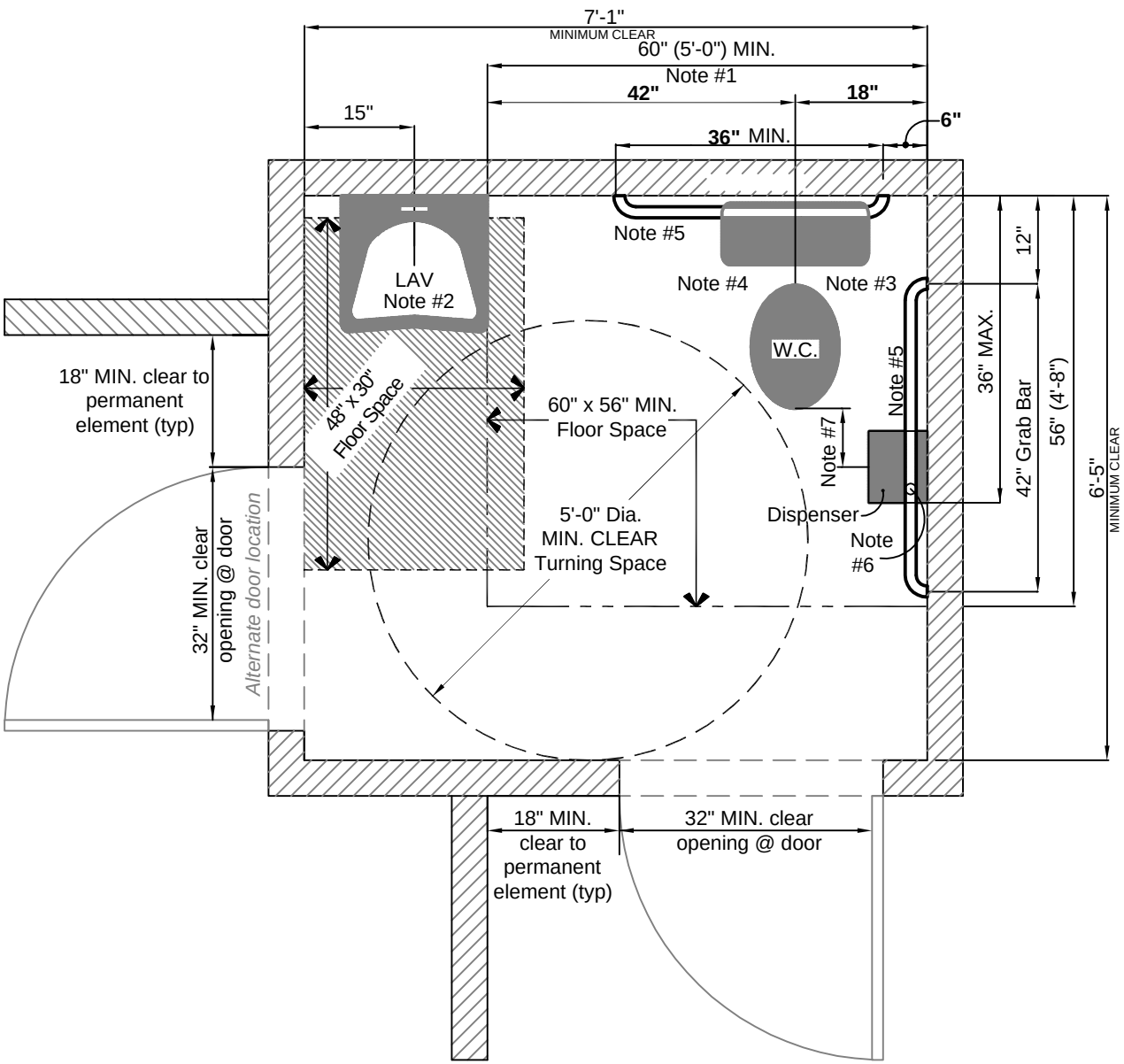

Room dimensions are **MINIMUM** to INSIDE finished wall surfaces for this *preferred* design

Note #1: Finish wall to edge of lavatory or other obstruction. NO OTHER FIXTURE OR OBSTRUCTION SHALL BE WITHIN THIS SPACE. (60" wide X 56" deep) (ANSI 604.3)

Note #2: Any manufacturer's standard wall hung lavatory may be used. Elongated style lavatories are not recommended. Installation must comply with ANSI 606.

Note #3: Any manufacturer's wall hung or floor mounted accessible toilet may be used. Seat height to be @ 19" AFF.

Note #4: Install flush valve control on the room side of the water closet (ANSI 604.6)

Note #5: Install horizontal grab bars 33" to 36" above finished floor. (ANSI 609.4)

Note #6: Install one vertical side wall grab bar; at least 18" long, mounted with the bottom of the bar located between 39" and 41" AFF; and with center line of bar located between 39" and 41" from rear wall.

Note #7: Center line of toilet paper dispenser shall be 7"-9" in front of the water closet, mounted 1 1/2" MIN below grab bar, or 12" MIN above grab bar; between 15"-48" AFF (ANSI 604.7). Far edge of dispenser to be no more than 36" from rear wall. (ADAAG fig. 30(d))

Note #8: All dispensers must comply with ANSI 309.

Accessible Single Occupant Toilet Room

PREFERRED Design (based on ANSI A117.1, 2003 and ADAAG, 1994)

Approved by the Architectural Barrier-Free Design Committee on January 20, 2009

Appendix D.01

NHDOT District 1 ADA Audit Summary

Date: 02/11/2016
Updated 18 August 2016

Non Compliance Items:

- **Accessible Parking Spaces**
  - Each accessible parking space is at least 96 inches wide.
    - Parking spaces are not painted, but seem to have sufficient space.
    - Restripe the accessible space, min. 96" wide.
    - Start parking lot/ramp work in summer 2017.
  - An adjacent access aisle (a no-parking zone usually designated by diagonal striped ground paint) that is at least 96 inches (8 feet) wide, preferably provided on the passenger side of the parking space. (Van Accessible)
    - Parking spaces are not painted, but seem to have sufficient space.
    - Restripe the accessible aisle, min. 96" wide.
    - Start parking lot/ramp work in summer 2017.
  - Where possible, access aisles have NO PARKING signs.
    - Access aisle is located directly in front of walkway/ramp to building so it is not possible to install sign in this location.
    - Not possible to install, this is in compliance.

- **Exterior Accessible Path of Travel**
  - The path of travel is not banked or does not have a cross slope greater than 1:48 (2%).
    - Ramp cross slope is greater than 2%.
    - Repave access ramp
    - Start parking lot/ramp work in summer 2017.

- **Ramps**
  - Cross slope of the ramp is not steeper than 1:48.
    - Ramp cross slope is greater than 2%.
    - Repave access ramp
    - Start parking lot/ramp work in summer 2017.

- **Accessible Entrances and Exterior Doors**
  - Door hardware is usable with one hand without tight grasping, pinching, or twisting of the wrist, such as a lever or pull handle.
    - Exterior outer door has knobs.

        - Replace door handle for both sides of existing door
        - Complete by December 2016.
    - If there is a threshold, it is no higher than ½ inch at the door and is beveled on both sides.
        - Threshold is 2.5" outside.
        - Reconfigure/reconstruct doorway threshold (Pavement shim?).
        - Start parking lot/ramp work in summer 2017.

- **Accessible Reception – Service Counters**
    - For a reception/service counter that is not used for writing, there is a 36-inch portion that is no higher than 36 inches from the floor.
        - Reception window is 46 inches from the floor.
        - "Ring bell for service" sign posted with accompanying bell. In Progress.
    - For a counter where the surface is used for writing, there is a 36-inch long portion with 27 inches open space for knee clearance beneath the counter.
        - Clip boards are provided for reasonable accommodation. No additional action necessary.

- **Accessible Interior Path of Travel and Interior Doors**
    - For both sides of the door, the hardware is operable by a single hand without tight grasping, pinching, or twisting of the wrist (lever or pull handle, or a panic bar).
        - Most of the office doors, closets, & 1 restroom have knobs. (Approx. 16.) Only the newer restroom & 2 of 3 exterior doors have handles
        - All door hardware (inside and outside) to be replaced by district.
        - Complete by December 2016.

- **Accessible Toilet Rooms Checklist**
    - There is appropriate signage identifying the restroom (unisex, male or female) with the wheelchair symbol, mounted on the exterior wall, adjacent to the door handle, with Braille and raised letter and symbols.
        - Bathroom has braille sign but is too high
        - Move existing sign to compliant height.
        - Complete by December 2016.
    - See items under Water Closet Elements for additional issues.

- **Water Closet (Toilet) Elements**
    - Current spacing and configuration of room and existing fixtures is not compliant.

        - Toilet and sink are too close together and currently doesn't provide adequate clearance.
        - Reconstruct toilet room to comply with all requirements, will require plumbing, electrical and construction work.
        - Plan to start construction in 2018, may coordinate with similar work at other districts if needed.
    - The distance from the centerline of the water closet to the sidewall is 16-18 inches.
        - Distance is 21".
        - Will address during toilet room reconstruction.
    - Water closet flush control is located on the open side of the room.
        - Will address during toilet room reconstruction.
    - The toilet paper dispenser is mounted 7-9inches forward of edge of the toilet bowl.
        - Will address during toilet room reconstruction.
    - There is one horizontal side wall grab bar mounted 33-36 inches above the floor that is 42 inches long, mounted no more than 12 inches away from the rear wall, extending at least 54 inches from the rear wall.
        - Will address during toilet room reconstruction.
    - There is one horizontal rear wall grab bar that is 36 inches long, with 12 inches of length of that bar provided on the transfer side of the water closet.
        - Will address during toilet room reconstruction.

- **Accessible Lavatory (Sink) Elements**
    - The pipes beneath the lavatory sink are not insulated.
        - Will address during toilet room reconstruction.

- **Where Room Signs are Provided**
    - All permanent rooms where the use is not likely to change, such as conference and meeting rooms, courtrooms, toilet rooms, etc., have signs with Braille and raised letters and symbols posted on the wall adjacent to the handle side of the door. Exit signs are included in this requirement.
        - No rooms other than bathroom are currently signed.
        - Provide signage with Braille for 2nd bathroom, breakroom and exits.
        - Complete by December 2016

- **Employee Break Rooms with Kitchens**
    - Where a kitchen or kitchenette is provided with a sink, the top of the sink is no higher than 34 inches from the floor (606.3) and there is clear floor space that is at least 48 inches long, parallel to and centered on the sink that is also at least 30 inches wide (parallel approach complying w/305) .
        - Sink is currently >34" maximum (36" measured).

- Parallel approach provided, although not compliant. See deficiency below
- Address as part of kitchen reconstruction.

➢ If a stove cooktop is also provided, then there is a clear floor space that is at least 30 inches wide by 48 inches long centered on the sink, with at least 27 inches knee & toe clearance beneath the sink (305&306).
- No clearance provided beneath the sink.
- Remove existing combination kitchenette and construct new kitchenette without cooktop or oven. No knee/toe clearance necessary for this construction.
- Complete by December 2019

606.2 Clear Floor Space. A clear floor *space* complying with 305, positioned for a forward approach,and knee and toe clearance complying with 306 shall be provided.
EXCEPTIONS: 1. A parallel approach complying with 305 shall be permitted to a kitchen sink in a *space* where a cook top or conventional range is not provided and to wet bars.
-

Notes:

306.2 Toe Clearance.
306.2.1 General. *Space* under an *element* between the finish floor or ground and 9 inches (230 mm) above the finish floor or ground shall be considered toe clearance and shall comply with 306.2.
306.2.2 Maximum Depth. Toe clearance shall extend 25 inches (635 mm) maximum under an *element*.
306.2.3 Minimum Required Depth. Where toe clearance is required at an *element* as part of a clear floor *space*, the toe clearance shall extend 17 inches (430 mm) minimum under the *element*.
306.2.4 Additional Clearance. *Space* extending greater than 6 inches (150 mm) beyond the available knee clearance at 9 inches (230 mm) above the finish floor or ground shall not be considered toe clearance.
306.2.5 Width. Toe clearance shall be 30 inches (760 mm) wide minimum.

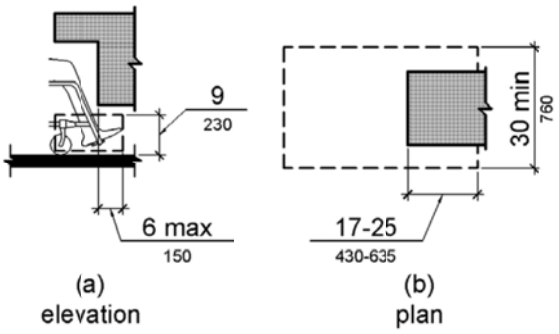

306.3 Knee Clearance.
306.3.1 General. *Space* under an *element* between 9 inches (230 mm) and 27 inches (685 mm) above the finish floor or ground shall be considered knee clearance and shall comply with 306.3.
306.3.2 Maximum Depth. Knee clearance shall extend 25 inches (635 mm) maximum under an *element* at 9 inches (230 mm) above the finish floor or ground.
306.3.3 Minimum Required Depth. Where knee clearance is required under an *element* as part of a clear floor *space*, the knee clearance shall be 11 inches (280 mm) deep minimum at 9 inches (230 mm)

above the finish floor or ground, and 8 inches (205 mm) deep minimum at 27 inches (685 mm) above the finish floor or ground.

306.3.4 Clearance Reduction. Between 9 inches (230 mm) and 27 inches (685 mm) above the finish floor or ground, the knee clearance shall be permitted to reduce at a rate of 1 inch (25 mm) in depth for each 6 inches (150 mm) in height.

306.3.5 Width. Knee clearance shall be 30 inches (760 mm) wide minimum.

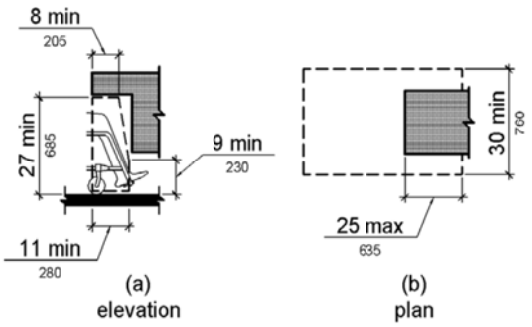

Appendix D.02

District 2 ADA Audit Summary

Date: 02/17/2016
Last Revised: 8/18/2016

Non Compliance Items:

- **Accessible Parking Spaces**
  - There are designated accessible accessible parking spaces located as close as possible to the accessible entrance.
    - No designated spaces (signed or marked), not compliant with any parts of this section, refer to checklist and ADA standards for all design requirements.
    - Need to establish designated space compliant with all requirements of this section including signage and marking. Will probably need to repave or shim to get parking space at less than 2% slope near the entrance.
    - Complete parking lot reconstruction by December 2017.

- **Exterior Accessible Path of Travel**
  - From the sidewalk or access aisle to accessible entrance, path of travel is firm, stable and slip-resistant, with a smooth walking surface.
    - Some cracks in pavement and gap from pavement to concrete.
    - Repair cracking and gap as part of parking lot work.
    - Complete parking lot reconstruction by December 2017.
  - The slope of the curb ramp is no steeper than 1:12 (8.3%).
    - Slope approaching entryway is 10%-11%.
    - Reconstruct entryway as part of parking lot reconstruction to provide accessible parking and path of travel to front door including ramps requirements as applicable.
    - Complete entryway reconstruction by December 2017.
  - a.) Other than curbs, the path of travel does not have abrupt changes in level that are over 1/4" in height.
    b.) If there is a change in level more than 1/2" in height, there is a ramp.
    - ~ 1" change in level from entry to doorway.
    - Reconstruct entryway as part of parking lot reconstruction.
    - Complete entryway reconstruction by December 2017.

- **Interior Stair Checklist**
  - The handrails are mounted to provide at least 2 ¼ inches clearance between the wall and the handrail.

        - 2 ¼ inch requirement is NFPA, actual ADA requirement is 1 ½ inches.
        - Existing railing provides 1 5/8 inches so it is ok
    - Handrails extend 12 inches beyond the top and bottom of the stairs.
        - Do not extend 12 inches beyond top or bottom of stairs.
        - Extend handrails as possible and feasible at top and bottom of stairs. Doorway or other structural elements may impact practicability of extending rails in some locations.
        - Complete handrail extensions by December 2017.
    - The height of the step (riser) is at least 4 inches but no more than 7 inches.
        - Steps are currently 7 ¾ inches high for upstairs and downstairs. (see next item)
    - The depth of each step is at least 11 inches.
        - Steps downstairs are 11 ½ inches, *OK*.
        - Steps upstairs are 9 ½ inches, non-compliant.
        - Need to review feasibility of reconstructing stairs vs use and need.

- **Accessible Entrances and Exterior Doors**
    - Where there are inaccessible entrances, there are signs clearly posted at each inaccessible entrance directing individuals to the nearest accessible entrance.
        - Add sign at secondary building entrances, directing to main entrance.
        - Complete by December 2016.
    - a.)The ground in front of the door is level, meaning that the grade does not exceed 1:48.
      b.) For a door that pulls open, this area measures at least 60 inches in length.
        - Level landing area is not big enough, only 36" long needs to be 60 inches min.
        - Reconstruct entryway as part of parking lot reconstruction.
        - Complete entryway reconstruction by December 2017.
    - If there is a raised threshold, it is no higher than ½ inch at the door and is beveled on both sides.
        - Transition/threshold at exterior doorway is ~ 1".
        - Reconfigure/reconstruct entryway/threshold at exterior doorway to reduce lip or provide ramp.
        - Complete by December 2017.

- **Accessible Reception – Service Counters**
    - For a reception/service counter that is not used for writing, there is a 36-inch portion that is no higher than 36 inches from the floor.
        - Reception window is 41 inches from the floor.
        - "Ring bell for service" sign posted with accompanying bell. In Progress.

- For a counter where the surface is used for writing, there is a 36-inch long portion with 27 inches open space for knee clearance beneath the counter.
    - Clip boards are provided for reasonable accommodation or folding table inside second door could be used. No additional action necessary.

rla

- **Accessible Interior Path of Travel and Interior Doors**
  - For both sides of the door, hardware is operable by a single hand without tight grasping, pinching, or twisting of the wrist (Lever or pull handle, or a panic bar).
    - All non-compliant door hardware (inside and outside) to be replaced by district.
    - Complete by December 2016.
  - For a single door that pulls open, there is clear maneuvering floor space in front of each door and at least 18 inches of clear floor space outside the door on the handle side of the door.
    - Clear space at 2nd (inside) door in entrance is limited by couch in the entrance way, required space is available if couch is moved.
    - Remove couch from the entryway to provide required clear space
    - Complete by December 2016.

- **Accessible Toilet Rooms Checklist (Womens)**
  - For both sides of the door; (a) the hardware is operable by a single hand without tight grasping, pinching, or twisting of the wrist.
    - All non-compliant door hardware (inside and outside) to be replaced by district.
    - Complete by December 2016.
  - There is appropriate signage identifying the restroom (Unisex, Male, or Female) with the wheelchair symbol, mounted on the exterior wall, adjacent to the door handle , with Braille and raised letters and symbols.
    - Existing sign doesn't have Braille lettering.
    - Remove sign and replace with sign w/Braille lettering.
    - Complete by December 2016.
  - The clear width for the door opening is at least 32 inches, measured when the door is open 90 degrees.
    - Existing door is 29 inches.
    - Evaluate, redesign and reconstruct women's restroom and breakroom to provide compliant spaces.
    - Complete necessary construction by December 2020.
  - For both sides of the door; a.) The hardware is operable by a single hand without tight grasping, pinching, or twisting of the wrist (lever or pull handle).
    - If space is planned to be remodeled to be compliant, will need a new door, address issue with new door.
    - Complete necessary construction by December 2020.
  - See items under Water Closet Elements for additional issues.

- **Water Closet (Toilet) Elements (Womens)**

- Current spacing and configuration of room and existing fixtures is not compliant.
  - Toilet clear floor space and clearances are not adequate as well as other minor issues.
  - Evaluate, redesign and reconstruct women's restroom and break room to provide compliant spaces.
  - Complete necessary construction by December 2020.

- **Accessible Toilet Rooms Checklist (Mens)**
  - There is appropriate signage identifying the restroom (Unisex, Male, or Female) with the wheelchair symbol, mounted on the exterior wall, adjacent to the door handle , with Braille and raised letters and symbols.
    - Existing sign doesn't have Braille lettering.
    - Remove sign and replace with sign w/Braille lettering.
    - Complete by December 2016.

- **Water Closet (Toilet) Elements (Mens) Stall & Urinal**
  - The accessible stall door hardware, and, if available, the coat hook, are mounted no higher than 48 inches from the floor.
    - Coat hook is 63 inches high.
    - Reposition coat hook no higher than 48 inches from floor.
    - Complete relocation by December 2016.
  - IBC 1109.2 (Exeption 4) – Where no more than one urinal is provided in a toilet room or bathing room, the urinal is not required to be accessible.
    - There is only 1 urinal; Accessible urinals section is not applicable to this toilet room.

- **Accessible Lavatory (Sink) Elements (Womens)**
  - The pipes beneath the lavatory sink are insulated.
    - Add insulation to the pipes beneath the sink, coordinate with toilet room renovation.
  - The lavatory faucets are operable by a single hand (paddle or lever type faucets).
    - Replace faucet controls with paddle or lever type, coordinate with toilet room renovation.
  - All dispensers are mounted no higher than 48 inches from the floor.
    - Dispensers mounted at 54".
    - Reposition dispensers to <48", coordinate with toilet room renovation.
  - Where a mirror is provided, the bottom edge of the reflecting surface is no higher than 40 inches above the floor.
    - Mirror is at 49 ½ inches.

        - Reposition mirror to <40”, coordinate with toilet room renovation.

- **Accessible Lavatory (Sink) Elements (Mens)**
    - The pipes beneath the lavatory sink are insulated.
        - Add insulation to the pipes beneath the sink
        - Complete by December 2016.

- **Where Room Signs are Provided**
    - All permanent rooms where the use is not likely to change, such as conference and meeting rooms, courtrooms, toilet rooms, etc., have signs with Braille and raised letters and symbols posted on the wall adjacent to the handle side of the door. Exit signs are included in this requirement.
        - No rooms are currently signed with Braille.
        - Provide signage with Braille for bathrooms, break room, conference room and exits.
        - Complete by December 2016

- **Employee Break Rooms with Kitchens**
    - Where a kitchen or kitchenette is provided with a sink, the top of the sink is no higher than 34 inches from the floor (606.3) and there is clear floor space that is at least 48 inches long, parallel to and centered on the sink that is also at least 30 inches wide (parallel approach complying w/305) .
        - Sink is currently >34” maximum (37” H).
        - Parallel approach provided, although not compliant. See deficiency below.
        - Evaluate, redesign and reconstruct women’s restroom and break room to provide compliant spaces.
        - Complete necessary construction by December 2020.
    - If a stove cooktop is also provided, then there is a clear floor space that is at least 30 inches wide by 48 inches long centered on the sink, with at least 27 inches knee & toe clearance beneath the sink (305&306).
        - No clearance provided beneath the sink.
        - Evaluate, redesign and reconstruct women’s restroom and break room to provide compliant spaces.
        - Remove existing combination kitchenette and construct new kitchenette without cooktop or oven and no knee/toe clearance would be required.
        - Complete necessary construction by December 2020.

606.2 Clear Floor Space. A clear floor *space* complying with 305, positioned for a forward approach,and knee and toe clearance complying with 306 shall be provided.
EXCEPTIONS: 1. A parallel approach complying with 305 shall be permitted to a kitchen sink in a *space* where a cook top or conventional range is not provided and to wet bars.

rla

Notes:

306.2 Toe Clearance.

306.2.1 General. *Space* under an *element* between the finish floor or ground and 9 inches (230 mm) above the finish floor or ground shall be considered toe clearance and shall comply with 306.2.

306.2.2 Maximum Depth. Toe clearance shall extend 25 inches (635 mm) maximum under an *element*.

306.2.3 Minimum Required Depth. Where toe clearance is required at an *element* as part of a clear floor *space*, the toe clearance shall extend 17 inches (430 mm) minimum under the *element*.

306.2.4 Additional Clearance. *Space* extending greater than 6 inches (150 mm) beyond the available knee clearance at 9 inches (230 mm) above the finish floor or ground shall not be considered toe clearance.

306.2.5 Width. Toe clearance shall be 30 inches (760 mm) wide minimum.

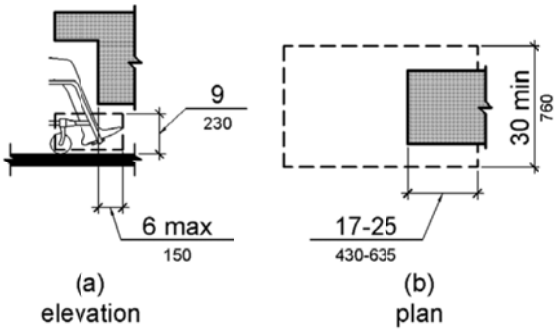

306.3 Knee Clearance.

306.3.1 General. *Space* under an *element* between 9 inches (230 mm) and 27 inches (685 mm) above the finish floor or ground shall be considered knee clearance and shall comply with 306.3.

306.3.2 Maximum Depth. Knee clearance shall extend 25 inches (635 mm) maximum under an *element* at 9 inches (230 mm) above the finish floor or ground.

306.3.3 Minimum Required Depth. Where knee clearance is required under an *element* as part of a clear floor *space*, the knee clearance shall be 11 inches (280 mm) deep minimum at 9 inches (230 mm) above the finish floor or ground, and 8 inches (205 mm) deep minimum at 27 inches (685 mm) above the finish floor or ground.

306.3.4 Clearance Reduction. Between 9 inches (230 mm) and 27 inches (685 mm) above the finish floor or ground, the knee clearance shall be permitted to reduce at a rate of 1 inch (25 mm) in depth for each 6 inches (150 mm) in height.

306.3.5 Width. Knee clearance shall be 30 inches (760 mm) wide minimum.

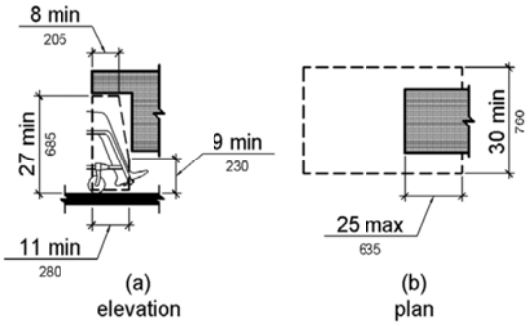

Appendix D.03

District 3 ADA Audit Summary

Date: 12/10/2015
Last Revised: 8/12/2016 SM

Non Compliance Items:

- **Accessible Parking Spaces**
  - Where possible, access aisles have "NO PARKING" signs.
    - Will be installed as part of parking and sidewalk reconstruction. .
    - Complete by September 2016

- **Exterior Accessible Path of Travel**
  - The grade or slope of the path of travel is 1:20(5%) or better.
    - Will be reconfigured as part of parking and sidewalk reconstruction. .
      COMPLETE June 2016

- **Ramps**
  - Ramp configuration is not compliant.
    - Will be reconfigured as part of parking and sidewalk reconstruction. .
      COMPLETE June 2016

- **Outside Stair Checklist**
  - There are handrails on both sides of the stair.
    - There are currently no handrails installed on stairs down side of building to the basement entrance.
    - Handrails will be installed in compliance with all requirements as part of parking and sidewalk reconstruction. .
    - Complete by November 2016

- **Accessible Entrances and Exterior Doors**
  - Where there are inaccessible entrances, there are signs clearly posted at each inaccessible entrance directing individuals to the nearest accessible entrance.
    - Add sign at second entrance to main level directing to the main entrance.
    - Complete by September 2016

  - For a door that pulls open there is at least 60 inches perpendicular and 18 inches parallel (beyond latch side) of clear space provided.
    - Second door in main entry does not provide 18 inches parallel to doorway beyond latch side, fireplace bricks are in the required clear space.

        - District to remove/reconfigure fireplace and brick to provide required clearance.
        - COMPLETE June 2016

    - Door hardware is usable with one hand without tight grasping, pinching, or twisting of the wrist, such as a lever or pull handle.
        - All door hardware (inside and outside) to be replaced by district.
        - COMPLETE June 2016
    - Door closer takes at least 5 seconds to close.
        - Adjust closer to increase closing time, > 5 seconds.
        - Complete by December 2016.

- **Accessible Reception – Service Counters**
    - For a counter where the surface is used for writing, there is a 36-inch long portion with 27 inches open space for knee clearance beneath the counter.
        - COMPLETE June 2016
        - Clip boards are provided for reasonable accommodation. No additional action necessary

- **Accessible Interior Path of Travel and Interior Doors**
    - For both sides of the door, hardware is operable by a single hand without tight grasping, pinching, or twisting of the wrist (Lever or pull handle, or a panic bar).
        - All door hardware (inside and outside) to be replaced by district.
        - COMPLETE June 2016

- **Accessible Toilet Rooms Checklist**
    - There is appropriate signage identifying the restroom (Unisex, Male, or Female) with the wheelchair symbol, mounted on exteriorwall, adjacent to the door handle, with Braille and raised letters and symbols.
        - Signage is in place but doesn't have braille.
        - Install new sign with Braille and raised letters and symbols
        - COMPLETE June 2016
    - See items under Water Closet Elements for additional issues.

- **Water Closet (Toilet) Elements**
    - Current spacing and configuration of room and existing fixtures is not compliant.
        - Toilet and sink are too close together and currently doesn't provide adequate clearance with door swing.
        - Reconstruct toilet room to comply with all requirements, will require plumbing, electrical and construction work. . COMPLETE June 2016

        - Plan to start construction in 2016, may coordinate with similar work at other districts if needed. . COMPLETE June 2016
    - Water closet flush control is located on the open side of the room.
        - Will address during toilet room reconstruction. . COMPLETE June 2016

- **Accessible Lavatory (Sink) Elements**
    - The pipes beneath the lavatory sink are not insulated.
        - Add insulation to the pipes beneath the sink. . COMPLETE June 2016
    - Where a mirror is provided, the bottom edge of the reflecting mirror is no higher than 40 inches above the floor.
        - Mirror is 48" high.
        - Reposition mirror to be 40" or less above the ground. COMPLETE June 2016

- **Where Room Signs are Provided**
    - All permanent rooms where the use is not likely to change, such as conference and meeting rooms, courtrooms, toilet rooms, etc., have signs with Braille and raised letters and symbols posted on the wall adjacent to the handle side of the door. Exit signs are included in this requirement.
        - No rooms other than bathroom are currently signed.
        - Provide signage with Braille for bathrooms, breakrooms and conference rooms.
        - Complete by December 2016

- **Employee Break Rooms with Kitchens**
    - Sinks shall comply with 606.2 (knee & toe clearance complying w/306).
        - Knee and toe clearance not currently provided (see requirements at end).
        - Remove/reconstruct cabinet under sink to provide required knee and toe clearance. . COMPLETE June 2016
    - Sinks shall comply with 606.3 (height).
        - Sink is currently >34" maximum (36" measured).
        - Lower top of sink to comply with maximum height. . COMPLETE June 2016
    - Where bottom-hinged door ovens are provided, they shall have the work surface required by 804.3 (30" wide min. & 34" high max.) positioned adjacent to one-side of the door. The clear floor space and knee/toe clearance required by 305 & 306 shall be provided.
        - Countertop is currently 36" high and knee/toe clearance is not provided.

- Reconstruct countertop to provide work surface complying with 804.3, 305 & 306. . COMPLETE June 2016

rla

Appendix D.04

NHDOT District 4 ADA Audit Summary

Date: 02/26/2016
Last Revised: 8/18/2016 SM

Non Compliance Items:

- **Accessible Parking Spaces**
  - The minimum amount of accessible parking spaces is provided based on the total available spaces (min. 1:25).
    - Signed accessible parking space is non-compliant (see below).
    - Relocate accessible parking space to compliant location.
    - Start parking lot work in summer 2017.
  - All accessible spaces have grade of no more than 1:48 (2%) slope.
    - Current signed location has slope of 2.9%.
    - Relocate accessible parking space to compliant location.
    - Start parking lot work in summer 2017.
  - An adjacent access aisle (a no parking zone usually designated by diagonal striped ground paint) that is at least 96 inches (8 feet) wide, preferably provided on the passenger side of the parking space.
    - Current signed location does not have adjacent access aisle.
    - Relocate accessible parking space to compliant location.
    - Start parking lot work in summer 2017.
  - Where possible, access aisles have NO PARKING signs.
    - Access aisle is not marked.
    - Relocate accessible parking space to compliant location.
    - Start parking lot work in summer 2017.

- **Exterior Accessible Path of Travel**
  - If there is a change in level more than ½ inch in height there is a ramp.
    - Lip at bottom of ramp to front entrance.
    - Provide appropriate transition/shim to ramp.
    - Start parking lot work in summer 2017.
  - The path of travel is not banked or does not have a cross slope greater than 1:48 (2%).
    - Path is sloped at 4.4% in parking area.
    - Relocate accessible parking space to compliant location.
    - Start parking lot work in summer 2017.

- **Ramps**

- Slope of the ramp is not steeper than 1:12 (8%).
    -
    -
- If the ramp or the landing has a vertical drop-off on either side, the floor surface extends 12” beyond the handrail or a curb is provided.
    - Floor doesn’t extend and there is no curb.
    - Install rail curbing at bottom or move handrails in to provide 12” extension and maintain 36” clear width.
    - Summer/Fall 2017.

- **Accessible Entrances and Exterior Doors**
    - Where there are inaccessible entrances, there are signs clearly posted at each inaccessible entrance directing individuals to the nearest accessible entrance.
        - Add sign at secondary building entrances (employee, etc), directing to main entrance.
        - Complete by December 2017.

- **Accessible Reception – Service Counters**
    - For a reception/service counter that is not used for writing, there is a 36-inch portion that is no higher than 36 inches from the floor.
        - Reception window is 42 inches from the floor.
        - “Ring bell for service” sign posted with accompanying bell. In Progress.
    - For a counter where the surface is used for writing, there is a 36-inch long portion with 27 inches open space for knee clearance beneath the counter.
        - Clip boards are provided for reasonable accommodation. No additional action necessary.

- **Stair Checklist (Storage Stair)**
    - Handrails extend 12 inches beyond the top and bottom of the stairs.
        - Do not extend 12 inches beyond bottom of stairs. (see last item)
        - There is door at the bottom of the stairs, handrail cannot extend
    - The height of the step (riser) is at least 4 inches but no more than 7 inches.
        - Steps are 7 ½ inches high, 9” at landings. (see last item)
    - The depth of each step is at least 11 inches.
        - Steps are 9 inches deep.
        - Space is not available and cost too prohibitive to reconstruct this stairway to be compliant. Transient work stair near employee

entrance is compliant and provides access to same storage location and should be considered reasonable accommodation.

- **Stair Checklist (Employee Stair)**
    - Employee stair at employee entrance is compliant.

- **Accessible Toilet Rooms Checklist (Men)**
    - To push or pull open the accessible door, no more than 5 pounds force is needed.
        - 9 lbs force required to open at inspection
        - Adjust door as necessary to reduce force needed to open door.
        - Complete by December 2016.
    - If there is a closer, meaning the door closes by itself, the door takes at least 5 seconds to close.
        - Door closed in ~ 4 seconds.
        - Adjust door closer as necessary to meet 5 second min.
        - Complete by December 2016.

- **Accessible Toilet Rooms Checklist (Women)**
    - Compliant

- **Water Closet (Toilet) Elements (Men)**
    - The water closet flush control is located on the open side of the room.
        - Move flush control to open side or replace tank with compliant version.
        - Complete by December 2016.
    - The toilet paper dispenser is mounted 7-9inches forward of edge of the toilet bowl.
        - Move toilet paper dispenser to compliant location.
        - Complete by December 2016.
    - For new water closets (8/17/2007), there is a vertical side wall grab bar that is at least 18 inches long, mounted with the bottom of the bar located between 39 inches and 41 inches above the floor, and with the centerline of the bar located between 39 and 41 inches from the rear wall.
        - Building renovation in 2007, requirement applies.
        - Install vertical side wall grab bar.
        - Complete by December 2016.

- **Water Closet (Toilet) Elements (Women)**
    - The toilet paper dispenser is mounted 7-9inches forward of edge of the toilet bowl.

        - Move toilet paper dispenser to compliant location.
        - Complete by December 2016.
    - For new water closets (8/17/2007), there is a vertical side wall grab bar that is at least 18 inches long, mounted with the bottom of the bar located between 39 inches and 41 inches above the floor, and with the centerline of the bar located between 39 and 41 inches from the rear wall.
        - Building renovation in 2007, requirement applies.
        - Install vertical side wall grab bar.
        - Complete by December 2016.

- **Accessible Urinals**
    - IBC 1109.2 (Exeption 4) – Where no more than one urinal is provided in a toilet room or bathing room, the urinal is not required to be accessible.
        - There is only 1 urinal, this section is not applicable to this toilet room.

- **Accessible Lavatory (Sink) Elements (Mens and Womens)**
    - All dispensers are mounted no higher than 48 inches from the floor.
        - Soap dispensers are 50".
        - Reposition dispensers to <48".
        - Complete by December 2016.

- **Where Room Signs are Provided**
    - All permanent rooms where the use is not likely to change, such as conference and meeting rooms, courtrooms, toilet rooms, etc., have signs with Braille and raised letters and symbols posted on the wall adjacent to the handle side of the door. Exit signs are included in this requirement.
        - No rooms other than bathroom are currently signed.
        - Provide signage with Braille for conference room, breakroom and exits.
        - Complete by December 2016

- **Employee Break Rooms with Kitchens**
    - Where a kitchen or kitchenette is provided with a sink, the top of the sink is no higher than 34 inches from the floor (606.3) and there is clear floor space that is at least 48 inches long, parallel to and centered on the sink that is also at least 30 inches wide (parallel approach complying w/305) .
        - Sink is currently >34" maximum (36" measured).
        - Parallel approach provided, although not compliant because forward approach required due to oven.
        - Renovate kitchen as necessary to provide required counter/sink height and clear floor space at oven/sink.
        - Complete by December 2020.

- If a stove or cooktop is also provided, then there is a clear floor space that is at least 30 inches wide by 48 inches long centered on the sink, with at least 27 inches knee & toe clearance beneath the sink (305&306).
  - No clearance provided beneath the sink or beside oven.
  - Renovate kitchen as necessary to provide required counter/sink height and clear floor space at oven/sink.
  - Complete by December 2020.

606.2 Clear Floor Space. A clear floor *space* complying with 305, positioned for a forward approach,and knee and toe clearance complying with 306 shall be provided.
EXCEPTIONS: 1. A parallel approach complying with 305 shall be permitted to a kitchen sink in a *space* where a cook top or conventional range is not provided and to wet bars.

-

Notes:

306.2 Toe Clearance.

306.2.1 General. *Space* under an *element* between the finish floor or ground and 9 inches (230 mm) above the finish floor or ground shall be considered toe clearance and shall comply with 306.2.

306.2.2 Maximum Depth. Toe clearance shall extend 25 inches (635 mm) maximum under an *element*.

306.2.3 Minimum Required Depth. Where toe clearance is required at an *element* as part of a clear floor *space*, the toe clearance shall extend 17 inches (430 mm) minimum under the *element*.

306.2.4 Additional Clearance. *Space* extending greater than 6 inches (150 mm) beyond the available knee clearance at 9 inches (230 mm) above the finish floor or ground shall not be considered toe clearance.

306.2.5 Width. Toe clearance shall be 30 inches (760 mm) wide minimum.

306.3 Knee Clearance.

306.3.1 General. *Space* under an *element* between 9 inches (230 mm) and 27 inches (685 mm) above the finish floor or ground shall be considered knee clearance and shall comply with 306.3.

306.3.2 Maximum Depth. Knee clearance shall extend 25 inches (635 mm) maximum under an *element* at 9 inches (230 mm) above the finish floor or ground.

306.3.3 Minimum Required Depth. Where knee clearance is required under an *element* as part of a clear floor *space*, the knee clearance shall be 11 inches (280 mm) deep minimum at 9 inches (230 mm) above the finish floor or ground, and 8 inches (205 mm) deep minimum at 27 inches (685 mm) above the finish floor or ground.

306.3.4 Clearance Reduction. Between 9 inches (230 mm) and 27 inches (685 mm) above the finish floor or ground, the knee clearance shall be permitted to reduce at a rate of 1 inch (25 mm) in depth for each 6 inches (150 mm) in height.

306.3.5 Width. Knee clearance shall be 30 inches (760 mm) wide minimum.

Appendix D.05

District 5 ADA Audit Summary

Date: 12/9/2015
Last Revised: 7/28/2016

Non Compliance Items:

- **Accessible Parking Spaces**
  - 5.a) Each van-accessible parking space is designated with a sign displaying the wheelchair symbol that reads "VAN ACCESSIBLE".
    - Install "VAN ACCESSIBLE SIGN" R7-8a sign with own forces. .COMPLETE June 2016
  - 6.c) Signs are mounted on a post with the bottom of the sign at least 60 inches off the ground.
    - Signs are 51" off the ground.
    - Reinstall signage 60" minimum from ground with own forces . COMPLETE June 2016
- **Accessible Interior Path of Travel – Obstacles**
  - Objects that protrude into the path of travel such as fire extinguishers, signs, drinking fountains, potted plants, furniture, etc., extend less than 4 inches into the path of travel.
    - Drinking fountains
  - 2.a)Any protruding objects are mounted lower than 27 inches from the floor.
    - No
  - 2.b)Any protruding objects are mounted higher than 80 inches from the floor.
    - No
  - 3.)Can the objects be removed or can the route be changed to avoid the objects.
    - No, drinking fountains attached to the wall.
    - Put down MAT under fountain. Reference page 23 of audit. . COMPLETE June 2016

- **Accessible Toilet Rooms Checklist**
  - 9.b) If there is a closer, meaning the door closes by itself, the door takes at least 5 seconds to close.
    - Adjust automatic closer timing with own forces. . COMPLETE June 2016

- **Toilet Stalls**

- 4.b) The accessible stall door hardware, and, if available, the coat hook are mounted no higher than 48 inches from the floor.
  - Currently 52", remove and reinstall hardware to <48" high with own forces. . COMPLETE June 2016
- 6.b) Does the door swing out of the stall.
  - Remove and reinstall door stop in reverse direction to allow doors to swing out of the stall with own forces. (1 stall in all bathrooms) . COMPLETE June 2016

- **Drinking Fountains**
  - If the water fountain is open beneath, it is either recessed or, if it protrudes more than 4 inches into the path of travel, a rubber mat has been placed under the water fountain to provide a touch on cane detectable warning.
    - Install mat under drinking fountain with own forces. . COMPLETE June 2016

Notes:

- **Accessible Parking Spaces**
  - 5.e) Where possible access aisles have NO PARKING signs.
    - Placement of sign would obstruct the accessible route to the accessible building entrance. Signage NOT required, currently IN COMPLIANCE.
  - 6.d) Where possible access aisles have NO PARKING signs.
    - Placement of sign would obstruct the accessible route to the accessible building entrance. Signage NOT required, currently IN COMPLIANCE.

- **Accessible Interior Path of Travel and Interior Doors**
  - During review didn't find door hardware that was mounted at 31". All hardware found mounted around 41", currently IN COMPLIANCE.

Appendix D.06

District 6 ADA Audit Summary

Date: 01/15/2016
Last Revised: 8/31/2016

Non Compliance Items:

- **Accessible Parking Spaces**
  - The minimum amount of accessible parking spaces is provided based on the total available spaces (min. 1:25).
    - Counted 28 total spaces with only one accessible space although striping is difficult to see.
    - Restripe lot and reduce number of available painted spaces to 25.
    - Start parking lot work in spring 2019.
  - All accessible spaces have grade of no more than 1:48 (2%) slope.
    - Regrade accessible space and aisle to be <2%. (Use pavement shim?)
    - Start parking lot work in spring 2019.
  - Each accessible parking space is at least 96 inches wide.
    - Parking spaces are not painted, but seem to have sufficient space.
    - Restripe the accessible space, min. 96" wide.
    - Start parking lot work in spring 2019.
  - Signs are mounted on a post with the bottom of the sign at least 60" from the ground.
    - Raise existing sign to be 60" high.
    - Complete by December 2016.
  - An adjacent access aisle, at least 96" wide (van accessible) is provided.
    - Parking spaces are not painted, but seem to have sufficient space.
    - Restripe the accessible aisle, min. 96" wide.
    - Start parking lot work in spring 2019.
  - Where possible, access aisles have NO PARKING signs.
    - Access aisle is located directly in front of walkway/ramp to building so it is not possible to install sign in this location.
    - Not possible to install, this is in compliance.

- **Exterior Accessible Path of Travel**
  - From the sidewalk or access aisle to accessible entrance, path of travel is firm, stable and slip-resistant, with a smooth walking surface.
    - Large pavement cracks (2"+/-) in the access aisle.
    - Repair cracks as part of regarding accessible space and aisle.
    - Start parking lot work in spring 2019.

- The path of travel is not banked or does not have a cross slope greater than 1:48 (2%).
  - Ramp is crowned (3%) near transition to concrete landing at the door.
  - Regrade ramp cross slope.
  - Start parking lot work in spring 2019.
- The grade or slope of the path of travel is 1:20 (5%) or better.
  - Path is 8% to 10% at ramp, see RAMP section comments.

- **Ramps**
  - Slope of the ramp is not steeper than 1:12 (8%).
    - Ramp is 8% to 10 % in some sections.
    - Regrade ramp in conjunction with accessible parking space.
    - Start reconstruction in spring 2019.
  - Cross slope of the ramp is not steeper than 1:48.
    - Ramp is crowned (3%) near transition to concrete landing at the door.
    - Regrade ramp cross slope.
    - Start parking lot work in spring 2019.
  - At the bottom and top of the ramp there is a level landing at least 60 inches long.
    - Top is compliant.
    - Bottom at access aisle is steeper than 2%, see accessible parking spaces section.
  - The handrails are sturdy and secure and do not rotate within their fittings.
    - LT handrail is loose near the building. (when looking at bldg.)
    - Repair handrail and fittings.
    - Complete in conjunction with parking/ramp regarding.
  - The top of the gripping surface of handrail is 34-38 inches above the surface of the ramp.
    - (2) handrails, each are outside the target height (28” and 42”)
    - Repair/replace handrail and fittings for top rail between 34”-38”.
    - Complete in conjunction with parking/ramp regarding.
  - Handrails extend at least 12” beyond the top and bottom of inclined portion of the ramps.
    - Handrails extend to edge of parking/sidewalk area, cannot extend further or would conflict with vehicle traffic. Extend to same point when repaired/reconstructed.

- **Outside Stair Checklist**
  - Handrails extend 12 inches beyond the top and bottom of the stairs.
    - Do not extend 12 inches beyond bottom of stairs. (see last item)
  - The height of the step (riser) is at least 4 inches but no more than 7 inches.

        - Steps are currently 8 inches high. (see next item)
    - The depth of each step is at least 11 inches.
        - Steps are currently 10 ½ inches.
        - Reconstruct stairs and handrails to comply with above items.
        - Start work in spring 2019.

- **Accessible Entrances and Exterior Doors**
    - Where there are inaccessible entrances, there are signs clearly posted at each inaccessible entrance directing individuals to the nearest accessible entrance.
        - Add sign at secondary building entrances, directing to main entrance.
        - Complete by July 2019.
    - Door hardware is usable with one hand without tight grasping, pinching, or twisting of the wrist, such as a lever or pull handle.
        - All door hardware (inside and outside) to be replaced by district.
        - Complete by July 2019.
    - If there is a threshold, it is no higher than ½ inch at the door and is beveled on both sides.
        - Threshold is 1.4".
        - Reconfigure/reconstruct doorway threshold.
        - Complete by July 2019.
    - Interior or second of two doors in a series, the force required to operate the interior door does not exceed five (5) pounds.
        - Was noted on previous inspection form as a non-compliance, at this visit INTERIOR door required <five pounds of force to open.
        - Exterior door is harder to open but force not specified by code.
        - Entry doors in compliance with force requirements.

- **Accessible Reception – Service Counters**
    - For a reception/service counter that is not used for writing, there is a 36-inch portion that is no higher than 36 inches from the floor.
        - Reception window is 39 inches from the floor.
        - "Ring bell for service" sign posted with accompanying bell. In Progress.

    - For a counter where the surface is used for writing, there is a 36-inch long portion with 27 inches open space for knee clearance beneath the counter.
        - Clip boards are provided for reasonable accommodation. No additional action necessary.

- **Accessible Interior Path of Travel and Interior Doors**

- For both sides of the door, hardware is operable by a single hand without tight grasping, pinching, or twisting of the wrist (Lever or pull handle, or a panic bar).
  - All door hardware (inside and outside) to be replaced by district.
  - Complete by December 2019.
- For a single door that pulls open, there is clear maneuvering floor space in front of each door and at least 18 inches of clear floor space outside the door on the handle side of the door.
  - 2nd (inside) door in entrance does not provide 18 inches outside the door on pull side of the door.
  - Flip the inside door to open into the entry way with the handle on the open side of the doorway.
  - Complete by December 2019.

Accessible Toilet Rooms Checklist

- For both sides of the door; (a) the hardware is operable by a single hand without tight grasping, pinching, or twisting of the wrist.
  - All door hardware (inside and outside) to be replaced by district.
  - Complete by December 2019.
- See items under Water Closet Elements for additional issues.

- **Water Closet (Toilet) Elements**
  - Current spacing and configuration of room and existing fixtures is not compliant.
    - Toilet and sink are too close together and currently doesn't provide adequate clearance with door swing.
    - Reconstruct toilet room to comply with all requirements, will require plumbing, electrical and construction work.
    - Plan to start construction in 2019, may coordinate with similar work at other districts if needed.
  - Water closet flush control is located on the open side of the room.
    - Will address during toilet room reconstruction.
  - There is one horizontal rear wall grab bar that is 36 inches long, with 12 inches of length of that bar provided on the transfer side of the water closet.
    - Will address during toilet room reconstruction.

- **Accessible Lavatory (Sink) Elements**
  - The pipes beneath the lavatory sink are not insulated.
    - Add insulation to the pipes beneath the sink, coordinate with toilet room renovation.
  - All dispensers are mounted no higher than 48 inches from the floor.
    - Reposition dispensers to <48" as part of toilet room renovation.

- **Where Room Signs are Provided**

- All permanent rooms where the use is not likely to change, such as conference and meeting rooms, courtrooms, toilet rooms, etc., have signs with Braille and raised letters and symbols posted on the wall adjacent to the handle side of the door. Exit signs are included in this requirement.
    - No rooms other than bathroom are currently signed.
    - Provide signage with Braille for 2nd bathroom, breakroom and exits.
    - Complete by December 2016

- **Employee Break Rooms with Kitchens**
    - Where a kitchen or kitchenette is provided with a sink, the top of the sink is no higher than 34 inches from the floor (606.3) and there is clear floor space that is at least 48 inches long, parallel to and centered on the sink that is also at least 30 inches wide (parallel approach complying w/305) .
        - Sink is currently >34" maximum (36" measured).
        - Parallel approach provided, although not compliant. See deficiency below
        - Address as part of kitchen reconstruction.
        - COMPLETE AUG 2016.
    - If a stove cooktop is also provided, then there is a clear floor space that is at least 30 inches wide by 48 inches long centered on the sink, with at least 27 inches knee & toe clearance beneath the sink (305&306).
        - No clearance provided beneath the sink.
        - Remove existing combination kitchenette and construct new kitchenette without cooktop or oven. No knee/toe clearance necessary for this construction.
        - COMPLETE AUG 2016.

606.2 Clear Floor Space. A clear floor *space* complying with 305, positioned for a forward approach,and knee and toe clearance complying with 306 shall be provided. **EXCEPTIONS: 1.** A parallel approach complying with 305 shall be permitted to a kitchen sink in a *space* where a cook top or conventional range is not provided and to wet bars.

Notes:

306.2 Toe Clearance.

306.2.1 General. *Space* under an *element* between the finish floor or ground and 9 inches (230 mm) above the finish floor or ground shall be considered toe clearance and shall comply with 306.2.

306.2.2 Maximum Depth. Toe clearance shall extend 25 inches (635 mm) maximum under an *element*.

306.2.3 Minimum Required Depth. Where toe clearance is required at an *element* as part of a clear floor *space*, the toe clearance shall extend 17 inches (430 mm) minimum under the *element*.

306.2.4 Additional Clearance. *Space* extending greater than 6 inches (150 mm) beyond the available knee clearance at 9 inches (230 mm) above the finish floor or ground shall not be considered toe clearance.

306.2.5 Width. Toe clearance shall be 30 inches (760 mm) wide minimum.

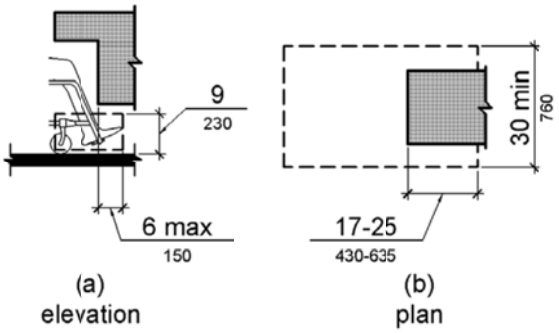

306.3 Knee Clearance.

306.3.1 General. *Space* under an *element* between 9 inches (230 mm) and 27 inches (685 mm) above the finish floor or ground shall be considered knee clearance and shall comply with 306.3.

306.3.2 Maximum Depth. Knee clearance shall extend 25 inches (635 mm) maximum under an *element* at 9 inches (230 mm) above the finish floor or ground.

306.3.3 Minimum Required Depth. Where knee clearance is required under an *element* as part of a clear floor *space*, the knee clearance shall be 11 inches (280 mm) deep minimum at 9 inches (230 mm) above the finish floor or ground, and 8 inches (205 mm) deep minimum at 27 inches (685 mm) above the finish floor or ground.

306.3.4 Clearance Reduction. Between 9 inches (230 mm) and 27 inches (685 mm) above the finish floor or ground, the knee clearance shall be permitted to reduce at a rate of 1 inch (25 mm) in depth for each 6 inches (150 mm) in height.

306.3.5 Width. Knee clearance shall be 30 inches (760 mm) wide minimum.

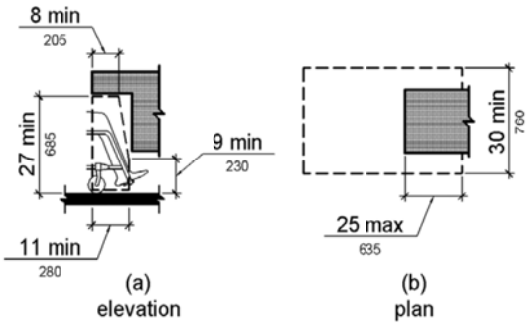

Appendix D.07
John O. Morton Building ADA Summary
Updated June 2016

ARCHITECTURAL BARRIER-FREE
DESIGN COMMITTEE
David Gleason, Chair
Cheryl Killam, Vice Chair
Jillian Shedd, Accessibility Specialist

Direct Line (603) 271-4177
Email:jillian.shedd@nh.gov
Website: www.nh.gov/disability/abcommittee.html

June 28, 2012

John Ankenbrock
Department Of Transportation
Federal Labor Compliance Supervisor
(603) 271-2467
jankenbrock@dot.state.nh.us

Dear Mr. Ankenbrock:

I appreciate your efforts in coordinating the June 14, 2012 accessibility walk-through of the completed Concord Department of Transportation Central Office. During the tour, several items were identified that need to be revised to bring the facility into compliance with the NH Code for Architectural Barrier-Free Design (AB Code) and the ADA Standards for Accessible Design (ADAAG). The following is a list of the items requiring further attention.

1. The minimum amount of accessible parking spaces is provided in the parking lot, based on the total number of available parking spaces (i.e., there should be at least one accessible parking space per 25 spaces provided in each parking lot) per IBC 1106.1 and ADAAG 208. *It seemed at our review that the amount of accessible spaces was appropriate, but they may be better utilized closer to the currently accessible entrance.* **DONE**

2. No access aisles have the *NO PARKING* signs in accordance with Abfd 303.02(4). *Provide the signs.* **NOT NEEDED**

3. The slope of the curb ramp is steeper than 1:12 (8.3%) per ANSI 406 and ADAAG 406 at the side entry sidewalk. *Repair to be compliant with the appropriate slope.* **IN PROCESS – To be removed.**

4. From the parking space access aisles to the accessible entrance, the path of travel is firm, stable and slip-resistant, but is without a smooth walking surface per ANSI 302.1 and ADAAG 302.1. *Repair the path to provide a smooth walking surface to the accessible entry from ALL parking spaces.* **IN PROCESS**

5. The bottom slope of the ramp is steeper than **1:12** *(measured 9.4 %.)* per ANSI 405.2, ADAAG 405.2 and ADAAG 405 for ramp requirements. *Repair by replacing the ramp.* **IN PROCESS – Capital Budget 2018**

6. The clear width of the ramp, measured between handrails, is NOT at least 36 inches per ANSI/ADAAG 405.5. The width is at the 33.5 inches at the bottom. *Correct the distance between the rails.* **IN PROCESS – Capital Budget 2018**

7. At the bottom and the top of the ramp there is a level landing that is at least 60 inches long. ANSI/ADAAG 405.7 The bottom landing is 56" and the Top landing is 60". *Correct the bottom landing size.* **IN PROCESS – Capital Budget 2018**

8. Where there are inaccessible entrances, there are no signs clearly posted at each inaccessible entrance directing individuals to the nearest accessible entrance in compliance with IBC 3409.8.1 and ADAAG 216.6. *Post the signs at each inaccessible entrance directing individuals to the nearest accessible entrance.* **DONE**

9. The top of the reception counter is at 35 inches high which is not in compliance with the range of at least 28 but no higher than 34 inches above the floor per ANSI 902 and ADAAG 902. *Lower the counter heights.* **IN PROCESS**

10. There are no signs mounted on both sides of the elevator hoist-way door opening, centered at 60 inches above the floor that designate the floor with 2-inch minimum-height raised letters and Braille characters. *Provide Braille signage as described.* **DONE**

11. The public phones do not have all of the operable parts located no higher than 48 inches from the floor. *Lower the phone systems to meet 48" maximum.* **DONE - REMOVED**

A note on the bathrooms- I will call out specifics we noted in each bathroom but I will also do a general note if required.

12. For a single door that pulls open, there is clear maneuvering floor space in front of each door and at least 18 inches of clear floor space beyond the door on the handle side of the door per ANSI 404.2.4. This was not met at the following restrooms: women's main public, women's cafeteria, ground floor men's, second floor men's, second floor women's and at the women's conference room. *Provide door openers or correct layout to ensure clear floor space.* **IN PROCESS**

13. The accessible stall door hardware and the coat hooks are mounted higher than 48 inches from the floor per ANSI and ADAAG 308. *Correct the heights of the coat hooks at all accessible stalls.* **DONE**

14. Consistently throughout all of the bathrooms there were paper towel dispensers mounted higher than 48 inches from the floor per ANSI and ADAAG 308. Also the control parts of these dispensers were *not* usable with one hand and *do* require grasping, pinching, or twisting of the wrist per ANSI and ADAAG 309. *Provide a different style of dispenser that is mounted in the correct height range.* **DONE**

15. At all of the accessible stall doors the accessible stall door lock is operable by a single hand but there are no door pull handles on both sides of the stall door per ANSI and ADAAG 309. *Provide door pull handles on both sides of the accessible stall door.* **DONE**

16. At the Women's public and Women's Second Floor Restrooms the toilet paper dispensers were mounted more than 7- 9 inches forward of edge of the toilet bowl. *Correct the location of the toilet paper dispensers.* **DONE**

17. At the Cafeteria Men's Restroom the pipes beneath the lavatory were not insulated per ANSI 606.6. *Insulate the pipes.* **IN PROCESS**

18. At the Ground Floor Men's Restroom and at the Men's Conference Room Restroom accessible urinals **t**he clear floor space did not measuring 30 inches by 48 inches provided for a forward approach. *Provide clear floor space by relocating the partition.* **IN PROCESS**

19. At the Men's Second Floor Restroom there are two or more urinals provided and none are accessible per IBC 1109.2 (Exception 4) and ADAAG 213.3. Therefore when providing an accessible urinal ensure that the following items are met:

A) The rim is a maximum of 17 inches above the floor
B) There is clear floor space measuring 30 inches by 48 inches provided for a forward approach.
C) The flush control is mounted no more than 44 inches above the floor.

We discussed the option of correcting the urinal on the left, when viewing them, to be compliant. **IN PROCESS**

20. At the Men's Conference Room Restroom The water closet flush control is not located on the open side of the room per ANSI 604.6. *Correct the toilet to ensure flush control is on the open side of the stall/room.* **IN PROCESS**

Please notify the Governor's Commission on Disabilities by writing, and with supporting photographs, when these outstanding items have been addressed. I can be contacted for additional information or technical assistance.

Respectfully submitted:

_____

Jillian Shedd, M-Arch
Accessibility Specialist

Appendix D.08
Materials and Research Building ADA Summary
Updated June 2016

ARCHITECTURAL BARRIER-FREE
DESIGN COMMITTEE
David Gleason, Chair
Cheryl Killam, Vice Chair
Jillian Shedd, Accessibility Specialist

Direct Line (603) 271-4177
Email:jillian.shedd@nh.gov
Website: www.nh.gov/disability/abcommittee.html

June 28, 2012

John Ankenbrock
Department Of Transportation
Federal Labor Compliance Supervisor
(603) 271-2467
jankenbrock@dot.state.nh.us

Dear Mr. Ankenbrock:

I appreciate your efforts in coordinating the June 21, 2012 accessibility walk-through of the completed Concord Department of Transportation Materials and Research Office. During the tour, several items were identified that need to be revised to bring the facility into compliance with the NH Code for Architectural Barrier-Free Design (AB Code) and the ADA Standards for Accessible Design (ADAAG). The following is a list of the items requiring further attention.

1. It is unknown if the minimum amount of accessible parking spaces is provided in the parking lot, based on the total number of available parking spaces (i.e., there should be at least one accessible parking space per 25 spaces provided in each parking lot) per IBC 1106.1 and ADAAG 208. *Count the existing parking spaces to ensure the proper amount of accessible parking has been provided.* **DONE**

2. No access aisles have the *NO PARKING* signs in accordance with Abfd 303.02(4). *Provide the signs.* **NOT NEEDED**

3. Each van-accessible parking space is not designated with a sign displaying the wheelchair symbol that reads "VAN ACCESSIBLE" per ANSI 502.7, ADAAG 502 and NH RSA 265: 73-a. *Provide the signs that state the spot is van accessible.* **DONE**

4. At the main stair in the entry way the handrails are not mounted to provide at least 2¼ inches clearance between the wall and the handrails per NFPA 101, section 7.2.2.4.4.5. *Adjust handrail location to comply with standards.* **DONE**

5. At the main stair in the entry way there is an open staircases along the routes and there is no barrier to prevent a person from walking under the stairs. *Provide a barrier that limits someone from walking beneath the stairwell.* **DONE**

6. The accessible stall door coat hooks, are mounted higher than 48 inches from the floor per ANSI / ADAAG 308 at the following restrooms; the First Floor Women's restroom, the First Floor men's restroom, the Second Floor Women's restroom and the Second Floor men's restroom. *Correct the heights of the coat hooks at all accessible stalls.* **DONE**

7. Consistently throughout all of the bathrooms there were paper towel dispensers mounted higher than 48 inches from the floor per ANSI and ADAAG 308. Also the control parts of these dispensers were *not* usable with one hand and *do* require grasping, pinching, or twisting of the wrist per ANSI and ADAAG 309. *Provide a different style of dispenser that is mounted in the correct height range.* **DONE**

8. At all of the 1st floor accessible stalls the distance from the centerline of the water closet to the side wall is greater than the 16-18 inches per ANSI and ADAAG 604. *Correct location of toilet or provide additional grab bars to ease transfer.* **NOT NEEDED**

9. At the First Floor Men's Restroom accessible urinal the clear floor space did not measuring 30 inches by 48 inches provided for a forward approach. *Provide clear floor space by relocating the partition.* **DONE**

10. Where a kitchen or kitchenette is provided with a sink, the top of the sink is higher than 34 inches from the floor and there is clear floor space that is at least 48 inches long, parallel to and centered on the sink that is also at least 30 inches wide per ANSI 804. *Correct height of the counter with the sink to be within height range.* **DONE**

11. *Provide Braille Signage at Main entry doorways that require secure access.* **DONE**

12. *Ensure chair within showers at the locker rooms are accessible to be folded down into the seated position with less than 5 lbs of force.* **DONE**

13. *Ensure lockers are compliant with the 48 inch max to 15 inch minimum reach range if a request is made to alter their setup.* **DONE**

Appendix D.09
Mechanical Services Building ADA Summary
Updated June 2016

Page 2, item 5 & 6: Appropriate signage needs to be posted for the Accessible parking spaces.

Page 10, item 1: Directional signage to accessible entrance needs to be posted at inaccessible entrances.
Item 7: Accessible entrance outside door closes in 3 seconds, inside 4 seconds. Needs to be adjusted to be no less than 5 seconds. Completed June 2016

Page 14 – Accessible Reception: Since the reception counter is used for writing, there needs to be a 36”w portion with 27”h clear knee space below, between 28”-34” above the floor. The current desk is 45.5” above the floor. An accommodation of having clip boards available for writing will be sufficient to meet these needs.

Page 16, Accessible Interior Path of Travel – Obstacles: It was noted that there are display cabinets, Fire Extinguishers and AEDs that protrude more than 4” into the path of travel. Completed June 2016

Page 17, item 7: The door by room 158 closes in 4 seconds. Door swing rate needs to be adjusted to close in no fewer than 5 seconds. Completed June 2016

Page 18, item 9b: The Men’s room door closes in 3 seconds. Door swing rate needs to be adjusted to close in no fewer than 5 seconds. Completed June 2016

Page 19, item 4: Coat hooks should be mounted no more than 48” off the floor in the accessible stalls. Men’s was 52”h, Women’s 53.5”h.

Page 22, Item 7a: Paper towel dispensers are mounted higher than the 48” max.

Page 24, Fire Alarms, Item 1: Conference Room A is missing the fire horn/strobe alarm.
Item 3b: Fire extinguisher protrudes 6.5”, max is 4”.
Room Signs, Item 1: There need to be wall mounted, raised letter and braille EXIT signs at exit doors. There is a missing wall mounted, raised letter and braille FUEL DISTRIBUTION sign.

Page 25, Employee Break Room with Kitchen: In reviewing break area in Conference Room A, the top of the sink is 2” higher than the 34” max and the clear floor space approach was 4” short of the 48” min.

Traffic Bureau Office ADA review
24 January 2013
Jillian Shedd

Accessible Parking Spaces:

- For a lot this size (76-100 spaces) the required number of accessible spaces is four. *Add one accessible space.*
- Signs are mounted at 55" high*. Mount signs at least 60" from the ground.*
- Access aisles are 51" wide*. Provide access aisle at least 60" wide and van accessible access aisle at least 96" wide.*

Exterior Accessible Path of Travel:

- The slope of the curb ramp is 8.8%. *Re-grade curb ramp to 8.3% or less.*
- Detectable warning panels not present on curb ramps*. Add detectable warning panels to curb ramps.*
- The path of travel to the entrance has a 2.9% cross slope. *Re-grade to 2% or less.*
- The path of travel to the entrance has a 8% running slope. *Re-grade to 5% or less.*

Ramps:

- Landing is 59" long*. Provide landing at least 60" long.*

Stairs:

- Handrails are mounted 2" from wall. *Provide at least 2.25" clearance between the handrail and the wall.*
- Handrails do not extend beyond the top and bottom of the stairs*. Provide handrails that extend 12" beyond the top and bottom of the stair.*
- The width of each step is 34". *Provide steps that are at least 36" wide.*

Accessible Entrances and Exterior Doors:

- Accessible Entrance directional signs not present. *Install signs at each inaccessible entrance directing individuals to the nearest accessible entrance.*

Accessible Reception – Service Counters:

- The reception counter is not accessible at 46" h. For a counter that **is** used for writing, there needs to be a 36"w section that is no higher than 36". For a counter that is **not** used for writing, there needs to be a 36"w section with 27"h knee clearance beneath, height 27-34". *Replace existing counter with writing appropriate counter per ADAAG 902 or 904.*

Accessible Toilet Rooms:

- Appropriate signage not present. *Provide signage identifying the restroom (Unisex, Male, or Female) with the wheelchair symbol, mounted on the exterior wall, adjacent to the door handle, with Braille and raised letters and symbols.*
- There are no visual fire alarms present in the restroom. *Provide visual fire alarms in restrooms if audible alarms present in building.*

- Door handles are not operable by a single hand without tight grasping, pinching or twisting of the wrist. *Replace with accessible handles that meet the aforementioned criteria.*
- There is insufficient clear floor space beyond the swing of the door. *Provide clear floor space per ANSI 404.2.5*
- Height of the toilet seat is 16”. *Mount so that seat is within 17-19”h.*
- Centerline of the toilet is 21” from wall. *Remount so centerline of toilet is 17-19” from wall.*
- Pipes beneath sink are not insulated. *Insulate pipes beneath sink.*
- The bottom edge of the mirror is 43” high, higher than the 40” maximum. *Re-mount mirror so that the bottom edge is no higher than 40”.*

Turnpikes Office ADA review
25 August 2015
Sandt Michener
Updated 29 August 2016

Accessible Parking Spaces:

- Van Accessible parking space is missing "Van Accessible" sign. *Install R7-8a sign.* **IN PROCESS**

Exterior Accessible Path of Travel:

- There are 1" wide cracks in the sidewalk and ramps. *Repair cracks to make the surface firm, stable, slip resistant with a smooth walking surface.* **COMPLETE**
- The slope of the curb ramp is 12%. *Re-grade curb ramp to 8.3% or less.*
- Detectable warning panels not present on curb ramps. *Add detectable warning panels to curb ramps.* **IN PROCESS**
- The gripping surface on the handrail is inconsistent due to rusty areas. *Repair handrail to make the gripping surface continuous for the entire length of the ramp.* **IN PROCESS**
- The handrail is mounted 1.75" from wall. *Remount handrail to provide at least 2.25" clearance from wall.*

Stairs:

- Stair risers are not the same height, depth and width for the entire run of the stair. Replace stairs so that the risers are the same height, depth and width for the entire run of the stair.

Accessible Entrances and Exterior Doors:

- Accessible Entrance directional signs not present. Install signs at each inaccessible entrance directing individuals to the nearest accessible entrance. **IN PROCESS**
- Entrance door does not provide sufficient opening clearance. *Provide for 60"minimum clear approach length to entrance.*
- Entrance door does not provide sufficient clear passage. *Provide for 32"minimum clear passage width.*
- Entrance door closes is 4 seconds. *Adjust door closer to close in no fewer than 5 seconds.* **COMPLETE**
- Clear floor space between doors that open one after the other is insufficient. Reconfigure entrance to provide at least 48"in length clear floor space between the doors plus the width of any door swinging into the space plus at least 36".

Accessible Reception – Service Counters:

- The reception counter is not accessible. For a counter that **is** used for writing, there needs to be a 36"w section that is no higher than 36". For a counter that is **not** used for writing, there needs to be a 36"w section with 27"h knee clearance beneath, height between 27-34". *Replace existing counter with writing appropriate counter per ADAAG 902 or 904.*

Elevator:

- Elevator is not accessible.

- Elevator door is 32” wide. *Door opening needs to be 36” minimum.*
- Interior of elevator car is 64”d x 60”w. *Dimensions need to comply with one of these: Door off center - 80” deep x 54” wide or 51” deep x 68” wide.*
- Signage with braille characters to identify each floor button not present.
- Signage with floor designation mounted to hoistway not present.
- No audible tones at the elevator call button location present. **IN PROCESS**

Accessible Interior Path of Travel - Obstacles:

- Fire extinguisher protrudes more than 4”. *Relocate or replace with low profile fire extinguisher.*

Accessible Interior Path of Travel – Interior Doors:

- Doors exceed 5 pounds of force to open doors. *Adjust door closer to less than 5 pounds force.*
- Door closes is 4 seconds. Adjust door closer to close in no fewer than 5 seconds. **COMPLETE**

Accessible Toilet Rooms:

- There are no visual fire alarms present in the restroom.
- Door handles are not operable by a single hand without tight grasping, pinching or twisting of the wrist. *Replace with accessible handles that meet the aforementioned criteria.*
- *Provide clear maneuvering space in front of the door and at least 18” clear floor space beyond the door on the handle side of the door.*
- There is insufficient clear floor space beyond the swing of the door. Provide clear floor space per ADAAG 603.2.3
- Height of the toilet seat is 16”. *Mount so that seat is within 17-19”h.*
- Clear floor space from the centerline of the toilet and any other fixture along the same wall is less than 42”. *Reconfigure restroom to meet aforementioned specifications.*
- Horizontal grab bar not compliant. *Install one horizontal grab bar mounted 33-36” above the floor that is 42” long, mounted no more than 12” away from the rear wall extending 54” from rear wall.*
- Flush control is located on the wall side of the restroom. *Move flush control to open side of the room.*
- Pipes beneath sink are not insulated. *Insulate pipes beneath sink.*
- The bottom edge of the mirror is 44” high, higher than the 40” maximum. *Re-mount mirror so that the bottom edge is no higher than 40”.*

Signage:

- Signage not compliant. *Permanent room signage must contain braille and raised letters and symbols posted on the handle side of the door. Where room numbers are posted, signs with braille numbers must also be provided.*

Employee break room:

- Top of the sink is 36” high. *Re-mount sink so top is no higher than 34”.*
- Clear floor space for sink approach is 40” long. *Provide at least 48” clear floor space for sink approach.*

EZ Pass WIC Hooksett ADA review
25 August 2015
Sandt Michener

Exterior Accessible Path of Travel:

- The grade or slope of the path of travel is 6%, in excess of the 5% maximum. *Re-grade to less than 5%.*

Accessible Entrances and exterior Doors:

- Door hardware is not usable with one hand without tight grasping, pinching or twisting of the wrist. *Replace with door hardware that is usable with one hand without tight grasping, pinching or twisting of the wrist.*
- Entrance door closes is 4 seconds. Adjust door closer to close in no fewer than 5 seconds.

Accessible Reception – Service Counters:

- Reception counter is 48" high, in excess of the 36" high maximum for a counter used for writing and no 27" high knee clearance. *Replace or modify existing desk to conform to the aforementioned specifications.*

Accessible Interior Path of Travel - Obstacles:

- Fire Extinguisher protrudes 5" into the path of travel. *Relocate out of the path of travel or replace with lower profile extinguisher that protrudes less than 4".*
- First Aid kit protrudes 7" into the path of travel. *Relocate out of the path of travel or replace with lower profile first aid kit that protrudes less than 4".*

EZ Pass WIC Nashua ADA review
18 April 2016
Sandt Michener

Accessible Parking Spaces:

- For a parking lot this size (101-150 spaces) five accessible spaces are required, one of which needs to be van accessible. There are only four signed spaces, including three van accessible spaces. *There is room to easily mark and sign an additional accessible space adjacent to an existing access aisle to become compliant.*
- It was noted that one access aisle lacked a required curb ramp. Individuals should not be required to travel behind parked vehicles. *Install ADA compliant curb ramp at non complaint access aisle.*

Exterior Accessible Path of Travel:

- It was noted that the access aisle curb ramp was missing material and there was a ¾" h transition to the parking lot. *Curb ramp needs to be repaired and a smooth transition provided.*
- Curb ramps lack detectable warning panels. *Add truncated dome panels to curb ramps.*

Entrances:

- At the inaccessible entrances, there need to be directional signs directing visitors to the front entrance which is accessible. *Add required entrance directional signage.*
- The interior door on the E side closes in less than 5 second minimum. *Adjust door closer to close in no less than 5 seconds.*

Women's Restroom:

- Flush control is not located on the open side of the room. *Relocate flush control to open side of the room or upgrade to auto flush to meet ADA standards.*

Men's Restroom:

- Door closes in less than 5 seconds. *Adjust door closer so the door closes in no less than 5 seconds to meet ADA standards.*

Public Telephones:

- Not accessible. Operable parts mounted above 48" maximum, no TTY. *Remove or upgrade to accessible public telephones.*

EZ Pass WIC Portsmouth ADA review
29 June 2015
Sandt Michener

Accessible Parking:

- Van Accessible parking space is missing "Van Accessible" sign. *Install R7-8a sign.* **Completed**
- Accessible parking signs mounted at 53". *Reinstall signs no lower than 60".* **Completed**

Accessible Entrances and exterior Doors:

- Entrance door closes is 4 seconds. Adjust door closer to close in no fewer than 5 seconds. **Completed**

Concord 93 Park and Ride ADA summary
27 January 2016
Sandt Michener

Accessible Parking Spaces, Main Lot:

- Van Accessible access aisle is insufficient size at 84"wide. *Add at least one van accessible space with an access aisle at least 96" wide. Post R7-8a "Van Accessible" signage mounted at least 60" high. Post "No Parking" signage on access aisle(s).*
- Spaces are missing required signage. *Provide each space with a R7-8 Accessible Parking sign.*

Exterior Accessible Path of Travel:

- Cracks in path of travel in excess of ½". *Repair cracks.*
- Drainage grate with openings greater than ½" in path of travel. *Relocate or replace with grate with less than ½" openings.*
- Curb ramps that transition to street are lacking detectable warning panels. *Provide detectable warning panels at curb ramps that transition into street.*

Women's Restroom:

- Stall door does not have a lock or handles on both sides of the door. *Provide lock and pull handles on both sides of the door.*
- Flush control is located on the wrong side. *Mount flush control on the open side of the room.*
- Horizontal grab bar is mounted at 32" high. *Mount horizontal grab bar 33-36" high.*

Men's Restroom:

- Horizontal grab bar is mounted at 32" high. *Mount horizontal grab bar 33-36" high.*
- Stall door does not have a lock or handles on both sides of the door. *Provide lock and pull handles on both sides of the door.*
- Coat hook is mounted at 66". *Mount coat hook no higher than 48".*
- Stall door opens into the stall*. Reverse hinges to allow door to swing out away from the stall.*

Drinking Fountain:

- Fountain protrudes more than 4" into the path of travel. *Provide detectable rubber mat beneath water fountain.*

Fire Extinguisher:

- Protrudes 6.75" into the path of travel. *Move out of path of travel or use low profile extinguisher that protrudes 4" or less.*

Public Telephone:

- Clear floor space of 30 x 40" for approach not provided and is in door swing. *Remove or relocate payphone to allow for 30" x 40" clear approach.*
- Operable parts are located at 60" high. *Re-mount payphone so operable parts are no higher than 48".*

Barriers Removed since last survey on 22 March 2013:

- Pipes beneath sink have been insulated.

- Dispensers in restroom lowered to 48” or less.

Dover C&J Park and Ride ADA summary
11 March 2016
Sandt Michener

Women's Restroom:

- Coat hook is mounted at 54"h. *Replace with new coat hook mounted no higher than 48" high.*

Men's Restroom:

- Coat hook is mounted at 54"h. *Replace with new coat hook mounted no higher than 48" high.*

Drinking Fountain:

- Fountain protrudes more than 4" into the path of travel. *Provide detectable rubber mat beneath water fountain.*

Public Telephone:

- Clear floor space of 30 x 40" for approach not provided and is in door swing. *Remove or relocate payphone to allow for 30" x 40" clear approach.*
- Operable parts are located at 52" high. *Re-mount payphone so operable parts are no higher than 48".*

Barriers removed since last survey on 12 February 2016:

- Motion sensor door opener installed.

Exit 4 Park and Ride ADA summary
28 March 2016
Sandt Michener

Accessible Parking Spaces:

- Van accessible parking spaces are missing appropriate signage. *Add R7-8a "Van Accessible" signage mounted at least 60" high.*

Accessible Interior Path of Travel – Interior Doors:

- Force required to open doors up to 10 pounds. *Adjust door closer to require no more than 5 pounds of force to open door.*

Women's Restroom:

- Coat hook is mounted at 54"h. *Replace with new coat hook mounted no higher than 48" high.*

Men's Restroom:

- Door hardware and coat hooks are mounted at 55". *Re-mount door hardware and coat hook no higher than 48".*

Barriers Removed since last survey on 14 Feb 2012:

- Mirrors lowered to 40".

Londonderry Park and Ride ADA summary
11 March 2016
Sandt Michener

Accessible Parking Spaces – Overflow lot:

- No van accessible parking spaces. *Add at least two van accessible spaces with access aisles at least 96" wide. Two spaces may share the same access aisle. Post R7-8a "Van Accessible" signage mounted at least 60" high. Post "No Parking" signage on access aisle(s).*

Restrooms:

- Coat hooks are mounted at 63"h. *Replace with new coat hook or remount no higher than 48" high.*

Public Telephone:

- Operable parts are located at 55" high. *Re-mount payphone so operable parts are no higher than 48".*

Barriers Removed since last survey on 14 Feb 2013:

- Restroom signage updated and is now compliant.
- Sign indicating TTY is available.

Nashua Exit 8 Rt 3 Park and Ride ADA summary
14 April 2016
Sandt Michener

Exterior Accessible Path of Travel:

- Cars can pull too far forward resulting in restricted accessible path of travel. *Provide curbing to maintain access path width.*
- Signs with "Handicap" verbiage. *Replace with "Accessible" verbiage.*

Women's Restroom:

- The bottom edge of the mirror is 42" high. *Re-mount mirror so that the bottom edge is no higher than 40".*

Men's Restroom:

- The rim of the urinal is mounted at 24" high. *Mount rim no higher than 17".*
- The bottom edge of the mirror is 42" high. *Re-mount mirror so that the bottom edge is no higher than 40".*

Public Telephone:

- Clear floor space of 30 x 40" for approach not provided. *Remove or relocate payphone to allow for 30" x 40" clear approach.*

Barriers Removed since last survey on 21 February 2013:

- Detectable Rubber mat added beneath water fountain.
- Manual pull station for fire alarm now in compliance at 41".

Portsmouth C&J Park and Ride ADA summary
28 March 2016
Sandt Michener

Accessible Parking Spaces:

- Van accessible parking spaces are missing appropriate signage. *Add R7-8a "Van Accessible" signage mounted at least 60" high.*

Accessible Entrances and Exterior Doors:

- Signs are not posted at each inaccessible entrance directing individuals to the nearest accessible entrance. *Clearly post signs at each inaccessible entrance directing individuals to the nearest accessible entrance.*

Accessible Reception – Service Counters:

- Reception counter is 29" wide for a counter not used for writing. A counter that is used for writing should provide a 36" wide portion. *Replace or modify existing desk to conform to the aforementioned specifications.*

Accessible Interior Path of Travel - Obstacles:

- "Psalm" painting description protrudes 16" into the path of travel. *Remove or modify to protrude 4"or less into the path of travel.*

Women's Restroom:

- Coat hook is mounted at 51"h. *Replace with new coat hook mounted no higher than 48" high.*
- The pipes beneath the sink are not insulated*. Insulate pipes beneath the sink.*
- Dispensers are mounted at 52". *Mount dispensers at 48" or less.*

Men's Restroom:

- There are no door pull handles on the inside of the stall doors in the toilet rooms. *Install door pull handles on the inside of the stall door.*
- Door hardware and coat hooks are mounted at 51". *Re-mount door hardware and coat hook no higher than 48".*
- The pipes beneath the sink are not insulated*. Insulate pipes beneath the sink.*
- The top of the sink is 35". *Mount sink so top is no higher than 34"*
- Dispensers are mounted at 52". *Mount dispensers at 48" or less.*

Salem Park and Ride ADA summary
15 March 2016
Sandt Michener

Accessible Parking Spaces, Main Lot:

- Van Accessible access aisles are insufficient size at 69”wide. *Add at least one van accessible space with an access aisle at least 96” wide. Post R7-8a “Van Accessible” signage mounted at least 60” high. Post “No Parking” signage on access aisle(s).*

Accessible Interior Path of Travel:

- Office door requires 7 pounds of force to push or pull open the door. *Adjust door closer to require 5 pounds force or less to open the door.*
- Utility door closes in less than 5 seconds. *Adjust door closer to close the door in minimum of 5 seconds.*
- Curb ramps that transition to street are lacking detectable warning panels. *Provide detectable warning panels at curb ramps that transition into street.*

Women’s Restroom:

- Coat hook is mounted at 54”. *Mount coat hook no higher than 48”.*
- Toilet paper dispenser is mounted 3” forward of the edge of the toilet bowl. *Mount dispenser 7-9” forward of the edge of the toilet bowl.*

Men’s Restroom:

- Coat hook is mounted at 53”. *Mount coat hook no higher than 48”.*

Drinking Fountain:

- Fountain protrudes more than 4” into the path of travel. *Provide detectable rubber mat beneath water fountain.*

Fire Extinguisher:

- Protrudes 6.75” into the path of travel. *Move out of path of travel or use low profile extinguisher that protrudes 4” or less.*

Public Telephone:

- Clear floor space of 30 x 40” for approach not provided and is in door swing. *Remove or relocate payphone to allow for 30” x 40” clear approach.*
- Operable parts are located at 54” high. *Re-mount payphone so operable parts are no higher than 48”.*

Barriers Removed since last survey on 21 February 2013:

- Auto flush installed at accessible urinal.

Canterbury Rest Area ADA summary
22 October 2012
Jillian Shedd

Accessible Parking Spaces:

- Van accessible parking spaces are missing appropriate signage. *Add R7-8a "Van Accessible" signage mounted at least 60" high.*

Ramps:

- The ramp has a vertical drop off on either side but does not provide a curb or floor surface that extends 12" beyond the handrail. *Provide a curb or floor surface that extends 12" beyond the handrail.*

Stairs:

- Handrails not provided on both sides of the stair. *Provide handrails to comply with ADAAG 504.6.*
- Height of riser is 8". *Provide stairs with risers 4-7" high.*
- Tread depth is 9.5". *Provide steps with tread depth of at least 11".*

Accessible Entrances and Exterior Doors:

- Clear maneuvering space in front of the door is insufficient on the handle side of the door. *Reconfigure door so that there is at least 18" maneuvering space on the handle side of the door.*
- The door hardware is not usable with one hand without tight grasping, pinching, or twisting of the wrist, such a lever or pull handle, or a panic bar. *Provide door hardware that is usable with one hand without tight grasping, pinching, or twisting of the wrist, such a lever or pull handle, or a panic bar.*

Accessible Reception – Service Counters:

- Reception counter that is not used for writing is 40"h. *Replace with a counter that provides at least a 36" wide portion not higher than 36".*

Accessible Interior Path of Travel - Obstacles:

- Brochure rack protrudes more than 4". *Remove or relocate brochure rack.*

Accessible Toilet Rooms:

- Signage identifying the restroom, with the wheel chair symbol, braille and raised letters is missing. *Install appropriate signage meeting aforementioned specifications.*
- Insufficient clear floor space for doors that must be opened in a series. *Provide clear floor space between the doors measuring at least 48 inches in length plus the width of any door swinging into the space between the doors (plus at least 36 inches).*
- Door hardware and coat hooks are mounted at 54". *Re-mount door hardware and coat hook no higher than 48".*
- Ambulatory access stall does not have grab bars installed on both sides of the stall. *Install grab bars on both sides of the stall.*
- Pipes beneath sink are not insulated. *Insulate pipes beneath sink.*
- Accessible stall closes faster than 5 seconds. *Adjust door closer to close in no less than 5 seconds.*

- The accessible stall closes into the stall. *Reverse hinges so door does not close into the stall.*

Drinking Fountains:

- Water fountain protrudes more than 4” into path of travel. *Provide detectable rubber mat beneath water fountain.*

Signage:

- Signage identifying permanent rooms, with braille and raised letters is missing. *Install appropriate signage meeting aforementioned specifications.*

Public Telephones:

- Operable parts of the payphone are 51” high. Remount payphone so operable parts are no higher than 48”.

Colebrook Welcome Center ADA summary
1 July 2015
Sandt Michener

Accessible Parking Spaces:

- Accessible parking spaces and access aisles are 2.7-3% slope, exceeding 2% maximum. *Re-grade accessible spaces and aisles to 2% slope or below to become compliant.*

Accessible Entrances and Exterior Doors:

- It was noted that the entrance door on the right closed in two seconds, faster than the five second minimum. *Adjust door closer to close in no faster than 5 seconds.*

Accessible Interior Path:

- It was noted that there were objects protruding more than 4" and mounted higher than 27" or lower than 80": Brochure rack, Restroom signs. *Replace, remove and/or relocate items to not protrude more than 4" or be mounted lower than 27" or above 80".*

Accessible Restroom:

- Toilet paper dispenser is mounted 12" forward of the toilet bowl. *Re-mount toilet paper dispenser to be mounted no more than 7-9" forward of the toilet bowl.*

Men's Restroom:

- The rim of the accessible urinal is 19" high. *Re-mount urinal so the rim is no higher than 17".*
- The flush control is mounted 47" high. *Re-mount flush control to no more than 44" high.*

Drinking Fountains:

- The spout is mounted at 37.5". *Remount so the spout is no higher than 36".*

Intervale Rest Area ADA summary
9 October 2015
Sandt Michener

Exterior Accessible Path of Travel:

- Gaps between tiles exceed 1/2" in many places. There are loose and missing tiles. This is a hazard for all users. *Replace tiles with suitable firm, stable, slip resistant walkway material with gaps less than ½".*

Stairs:

- Center handrail loose and missing in sections. *Replace and/or repair handrail.*

Accessible Entrances and Exterior Doors:

- It was noted that the N outer door closed in 3 seconds, N inner door in 4 seconds, S inner door 3 seconds. This is faster than the 5 second minimum. *Adjust door closer to close in no faster than 5 seconds.*
- Lower N and W doors exceed 5 lbs force to open. *Adjust closers to close with less than 5 lbs force.*

Men's Restroom:

- The rim of the accessible urinal is 19" high. *Re-mount urinal so the rim is no higher than 17".*

Drinking Fountains:

- Water fountain protrudes more than 4" into path of travel. *Provide detectable rubber mat beneath water fountain.*

Lebanon Rest Area ADA summary
21 September 2015
Sandt Michener

Accessible Parking Spaces:

- Van accessible parking spaces are missing appropriate signage. *Add R7-8a "Van Accessible" signage mounted at least 60" high.*

Exterior Accessible Path of Travel:

- There are no detectable warning panels present at curb ramps. *Fit detectable warning panels at curb ramps/tip downs.*
- The grade or slope of the path of travel is 7.6%, in excess of the 5% maximum. *Re-grade to less than 5%.*

Accessible Reception – Service Counters:

- Reception counter is 40" high, in excess of the 36" high maximum for a counter not used for writing and in excess of the 34" high maximum for a counter that is used for writing. *Replace or modify existing desk to conform to the aforementioned specifications.*

Accessible Interior Path of Travel - Obstacles:

- Pay phone protrudes more than 4". *Remove or relocate payphone.*

Accessible Restroom:

- The distance from the centerline of the toilet is 19", more than the 16-18" maximum. *Re-mount toilet so the centerline is between 16 and 18".*
- The bottom edge of the mirror is 44" high, higher than the 40" maximum. *Re-mount mirror so that the bottom edge is no higher than 40".*

Men's Restroom:

- The rim of the accessible urinal is 18" high. *Re-mount urinal so the rim is no higher than 17".*

Drinking Fountains:

- Water fountain protrudes more than 4" into path of travel. *Provide detectable rubber mat beneath water fountain.*

Room signage:

- Signs are mounted 64" high, higher than the 60" maximum. *Re-mount signs so the centerline is no higher than 60".*

Public Telephones:

- Clear floor space in front of the pay phone is less than 48"w x 36"deep. *Remove or relocate phone to have an approach of at least 30" x 48".*

Employee Break Rooms with Kitchens:

- Sink is 37" high. *Re-mount sink to 34" h or less.*

- Clear floor space for sink approach is 38” x 22”. *Relocate sink to accommodate an approach of at least 48” long and 30” wide.*

Littleton Rest Area ADA summary
8 July 2015
Sandt Michener

Accessible Parking Spaces:

- Van accessible parking spaces are missing appropriate signage. *Add R7-8a "Van Accessible" signage mounted at least 60" high.*
- Access aisle adjacent to van accessible space is 68" wide. *Repaint space to at least 96" wide.*

Exterior Accessible Path of Travel:

- There is a 1" high transition from the walkway to the front entrance. *Re-grade entrance to less than 1/4" h change in level.*

Accessible Interior Path of Travel - Obstacles:

- Brochure rack protrudes more than 4". *Remove or relocate brochure rack.*

Toilet Rooms:

- There are no audible fire alarms in the toilet rooms. *Install audible (horn or speaker) fire alarms in the toilet rooms.*
- Door hardware and coat hooks are mounted higher than 48". *Re-mount door hardware and coat hook no higher than 48".*
- Pipes beneath sink are not insulated. *Insulate pipes beneath sink.*
- The bottom edge of the mirror is 45" high, higher than the 40" maximum. *Re-mount mirror so that the bottom edge is no higher than 40".*

Accessible Restroom:

- Clear maneuvering space in front of the door is 5" on the handle side of the door. *Reconfigure door so that there is at least 18" maneuvering space on the handle side of the door.*

Men's Restroom:

- Door closes in 4 seconds. *Adjust closer to close in no fewer than 5 seconds.*

Women's restroom:

- Flush control is located on the wall side of the restroom. *Move flush control to open side of the room.*

Drinking Fountains:

- Water fountain protrudes more than 4" into path of travel. *Provide detectable rubber mat beneath water fountain.*
- The spout is mounted at 38". *Remount so the spout is no higher than 36".*

Fire Alarms:

- There are no visual (strobe) fire alarms in the toilet rooms, public use areas and all employee common use areas. *Install (strobe) fire alarms in the toilet rooms, public use areas and all employee common use areas.*

Salem Rest Area ADA summary
3 November 2015
Sandt Michener

Accessible Parking Spaces:

- Accessible spaces on E side are 88”– 90” wide. *Repaint spaces to at least 96” wide.*

Exterior Accessible Path of Travel:

- There is a 1”- 1.5” high transition from the curb ramp to the parking lot. *Re-grade curb ramp and/or parking lot to less than 1/4” h change in level.*
- Detectable warning panels not present on curb ramps*. Add detectable warning panels to curb ramps.*
- The path of travel to the entrance has slopes 2-4%. *Re-grade path to 2% or less.*

Accessible Reception – Service Counters:

- Reception counter that is not used for writing is 42.5”h. *Replace with a counter that provides at least a 36” wide portion not higher than 36”.*

Accessible Interior Path of Travel - Obstacles:

- Brochure rack protrudes more than 4”. *Remove or relocate brochure rack.*

Toilet Rooms:

- There are no door pull handles on the inside of the stall doors in the toilet rooms. *Install door pull handles on the inside of the stall door.*
- Door hardware and coat hooks are mounted at 53”-56”. *Re-mount door hardware and coat hook no higher than 48”.*
- The bottom edge of the mirror is 43” high, higher than the 40” maximum. *Re-mount mirror so that the bottom edge is no higher than 40”.*

Women’s and third restroom:

- Flush control is located on the wall side of the restroom. *Move flush control to open side of the room.*
- Pipes beneath sink are not insulated. *Insulate pipes beneath sink.*

Drinking Fountains:

- Water fountain protrudes more than 4” into path of travel. *Provide detectable rubber mat beneath water fountain.*

Rest Room signage:

- Men’s room sign mounted at 63”, Women’s sign mounted at 64”. *Re-mount signs no higher than 60” to center of sign.*

Public Telephone:

- Operable parts mounted at 55”. *Remove or re-mount so the operable parts are no higher than 48”.*

- No volume control. *Provide phone with volume control.*

Employee break room:

- Top of the sink is 36” high. *Re-mount sink so top is no higher than 34”.*

Sanbornton Rest Area ADA summary
22 October 2012
Jillian Shedd

Accessible Entrances and Exterior Doors:

- Curb ramp is 12% at entry. Replace curb ramp with a ramp with a slope 8.3% or less.

Accessible Reception – Service Counters:

- Reception counter that is used for writing is 40"h and provides no knee space. *Replace with a counter that provides at least a 36" wide portion not higher than 34" with minimum 27" high knee space.*

Toilet Rooms:

- There are no door pull handles on the inside of the stall doors in the toilet rooms. *Install door pull handles on both of the stall door.*
- Door hardware and coat hooks are mounted higher than 48". *Re-mount door hardware and coat hook no higher than 48".*
- Ambulatory access stall does not have grab bars installed on both sides of the stall. *Install grab bars on both sides of the stall.*
- Pipes beneath sink are not insulated. *Insulate pipes beneath sink.*
- Accessible stall closes faster than 5 seconds. *Adjust door closer to close in no less than 5 seconds.*
- The sink is mounted at 36" high. Remount sink to 34" or lower.
- Flush Control for the urinal is mounted at 48". Remount flush control to no more than 44".

Drinking Fountains:

- Water fountain protrudes more than 4" into path of travel. *Provide detectable rubber mat beneath water fountain.*

Signage:

- Signage identifying permanent rooms, with braille and raised letters is missing. *Install appropriate signage meeting aforementioned specifications.*

Public Telephones:

- Operable parts of the payphone are 51" high. Remount payphone so operable parts are no higher than 48".

Seabrook Welcome Center ADA summary
Updated 20 April 2016
Sandt Michener

Accessible Parking Spaces:

- For a parking lot this size (201-300 spaces) seven accessible spaces are required, two of which need to be van accessible. It appeared that there are only six signed spaces, including a van accessible space. It was difficult to tell if there was another accessible space marked as the paint was faded. *There is room to easily mark and sign an additional van accessible space adjacent to an existing 96"w access aisle to become compliant.*

Exterior Accessible Path of Travel:

- It was noted that the slope of the ramp from the South sidewalk to the main entrance was 11%. *The section needs to be removed and re graded to no more than 8.3% to become compliant.*
- There are a few cracks/heaves in the concrete in excess of 0.5". *Repair/fill cracks*.
- Curb ramps lack detectable warning panels. *Add truncated dome panels to curb ramps. This can be performed as part of the next resurfacing.*

Stairs:

- There are gaps in excess of 0.5" in the stairway and in the transition to the sidewalk. *Replace/repair mortar and fill in gaps in concrete*

Entrances:

- Most of the interior entrance doors require 8-10 lbs. force to open, significantly above the 5 lbs or less requirement. *Adjust interior entrance doors to require 5 lbs force or less to open.* Although this would make the doors ADA compliant, as this is a Welcome Center, power door openers would be an appropriate upgrade.
- The door to the vending building requires 12 lbs force to open, above the 10 lbs force maximum for exterior doors. *Adjust exterior entrance doors to require 10 lbs force or less to open*
- It was noted that the threshold to the vending building is 2"h, but the contractor onsite informed me that this was being addressed.

Reception/Service Counters:

- The reception counter is not accessible. For a counter that **is** used for writing, there needs to be a 36"w section that is no higher than 36". For a counter that is **not** used for writing, there needs to be a 36"w section with 27"h knee clearance beneath, height between 27-34". *Replace existing counter with writing appropriate counter per ADAAG 902 or 904.*

Signage:

- The bottom of the Restroom sign is mounted at 63". *Re-mount sign so the center of the sign is no higher than 60" and no lower than 48".*

Staff Restroom:

- No audio/visual fire alarm present. *Install audio/visual fire alarm.*

- This restroom is not accessible. Signage should be changed to reflect this. *Replace existing wheelchair signage with signage without accessible wheelchair symbol.*
- Disabled staff will need to use public accessible restroom until a complete restroom renovation is completed to ADA standards.

Spare Restroom:

- Coat hook is broken off. *Replace with new coat hook mounted no higher than 48" high.*

Women's Restroom:

- Coat hook is mounted at 51"h. *Replace with new coat hook mounted no higher than 48" high.*
- Mirror is mounted at 41". *During renovation, mount mirror no higher than 40" to meet ADA standards.*

Men's Restroom:

- Mirror is mounted at 42". *During renovation, mount mirror no higher than 40" to meet ADA standards.*
- The pipes beneath a sink are not insulated. *Insulate any non-insulated pipes.*

Public Telephones:

- Not accessible. Operable parts mounted above 48" maximum, no TTY. *Remove or upgrade to accessible public telephones.*

Barriers removed since January 2013 Survey

- Restroom doors no longer swing into the stall.
- Spare restroom mirror has been lowered to 40".
- Men's restroom faucet handles now compliant.

Springfield Rest Area ADA summary
26 October 2012
Jillian Shedd

Accessible Parking Spaces:

- One accessible parking space is missing the wheel chair symbol sign. *Provide one R7-8 sign.*

Exterior Accessible Path of Travel:

- Detectable warning panels not present on curb ramps*. Add detectable warning panels to curb ramps.*

Accessible Reception – Service Counters:

- Reception counter that is not used for writing is 36”h and provides no knee space. *Replace with a counter that provides at least a 36” wide portion not higher than 34” with minimum 27” high knee space.*

Accessible Toilet Rooms:

- Signage identifying the restroom, with the wheel chair symbol, braille and raised letters is missing. *Install appropriate signage meeting aforementioned specifications.*
- There are no door pull handles on both sides of the stall door in the spare toilet room. *Install door pull handles on both sides of the stall door.*
- Door hardware and coat hooks are mounted at 52”. *Re-mount door hardware and coat hook no higher than 48”.*
- The distance from the centerline of the toilet to the wall is 20”. *Remount toilet so the centerline is 16-18” from wall.*

Women’s restroom:

- The bottom edge of the mirror is 42” high, higher than the 40” maximum. *Re-mount mirror so that the bottom edge is no higher than 40”.*
- The top of the sink is 35” from the floor. *Remount sink no higher than 34”.*
- Napkin dispenser is mounted 54” high. *Remount dispenser no higher than 48”.*
- The control parts of dispensers are not usable with one hand and require grasping, pinching, or twisting of the wrist. *Install dispenser that is usable with one hand and does not require grasping, pinching, or twisting of the wrist.*

Employee break room:

- There is no knee clearance below the sink. *Provide at least 27” knee clearance beneath the sink.*

Sutton Rest Area ADA summary
22 October 2012
Jillian Shedd

Exterior Accessible Path of Travel from Sidewalks/Parking Lot to Accessible Entrance:

- Curb ramp is less than 36" wide. Replace with a compliant curb ramp at least 36" wide.

Ramp:

- Ramp has a 9% slope. *Re-grade to 8.3% or less.*
- Ramp surface is not firm, stable and slip resistant. *Provide firm, stable and slip resistant ramp surface.*

Stairs:

- Handrails not present on both sides of the stair. *Provide handrails on both sides of the stair.*
- Handrails not sturdy or secure in their fittings. *Provide secure and sturdy handrails.*
- Handrail gripping surface is not continuous*. Provide continuous handrail gripping surface, including landings.*
- Handrails do not extend 12" beyond the top and bottom of the stairs. *Extend handrails 12" beyond the top and bottom of the stairs.*
- Tread depth is 10". *Replace steps with tread depth at least 11".*
- Steps have open risers. *Replace steps that have closed risers.*

Accessible Entrances and Exterior Doors:

- Clear maneuvering space in front of the entry door is insufficient on the handle side of the door. *Reconfigure door so that there is at least 18" maneuvering space on the handle side of the door.*

Accessible Toilet Rooms:

- Door hardware and coat hooks are mounted at 51". *Re-mount door hardware and coat hook no higher than 48".*
- The stall door opens into the stall. *Remount hinges so door opens outward.*
- Grab bars not present on both sides of the accessible stall*. Install grab bars on both sides of the stall.*
- The distance from the centerline of the toilet to the wall is 19". *Remount toilet so the distance from the centerline to the wall is 16-18".*
- The flush control is not mounted on the open side of the room. *Mount flush control on the open side of the room*

Accessible Urinal:

- Clear forward approach space is insufficient. *Provide clear approach space of 30"w x 48" deep*.
- Flush control is 57" high. *Remount flush control no more than 44" high or provide auto flush.*

Drinking Fountains:

- Water fountain protrudes more than 4" into path of travel. *Provide detectable rubber mat beneath water fountain.*
- *Spout is mounted at 41" high. Mount spout no higher than 36" from the floor.*

Pedestrian Button APS Prioritization

Total = (Attribute Rating) + (ADA Rating)

Presence of Informational Sign	Attribute Rating	ADA Rating	Total
Yes	3	0	3
No		5	8

Vibro-Tactile Button Present	Attribute Rating	ADA Rating	Total
Yes	5	0	5
No		5	10

Audible Tone Locator Present	Attribute Rating	ADA Rating	Total
Yes	5	0	5
No		5	10

Audible Messages Present	Attribute Rating	ADA Rating	Total
Yes	5	0	5
No		5	10

Countdown Display is Visible From Curb Ramp	Attribute Rating	ADA Rating	Total
Yes	3	0	3
No		5	8

Obstructions	Attribute Rating	ADA Rating	Total
Permanent	5	5	10
Temporary		2	7
Snow		4	9
None		0	5

Pad Material	Attribute Rating	ADA Rating	Total
Asphalt	4	0	4
Stamped Asphalt		2	6
Brick		3	7
Unpaved		4	8
Concrete		1	5
Other		5	9

Crosswalk Direction	Attribute Rating	ADA Rating	Total
North	1	0	1
South		0	1
East		0	1
West		0	1

Face of Push Button Parallel to Crosswalk	Attribute Rating	ADA Rating	Total
Yes	3	0	3
No		3	6

Mounting Height	Attribute Rating	ADA Rating	Total
42"-48"	4	0	4
Less than 42" or Greater than 48"		4	8

Rating Categories

Attribute Categories	
Rating 1	Attribute has a low impact to ADA compliance
Rating 2	
Rating 3	
Rating 4	
Rating 5	Attribute highly impacts ADA compliance

ADA Rating Categories	
Rating 0	No ADA impedance
Rating 1	
Rating 2	
Rating 3	
Rating 4	
Rating 5	Major ADA impedance

Mushroom Plunger Diameter	Attribute Rating	ADA Rating	Total
2" or Greater	5	0	5
Less than 2"		5	10

Distance of Max Open Space Beneath Cabinet	Attribute Rating	ADA Rating	Total
Less than or equal to 27"	2	2	4
Greater than 27"		0	2

Distance From Crosswalk Line, Furthest From Intersection, to Button	Attribute Rating	ADA Rating	Total
less than or equal to 60"	3	0	3
Greater than 60"		3	6

Distance From Curb/Shoulder/Pavement	Attribute Rating	ADA Rating	Total
18"-72"	3	0	3
Less than 18" or Greater than 72"		3	6

Minimum Button Approach Width	Attribute Rating	ADA Rating	Total
32" or Greater	3	0	3
Less than 32"		4	7

Minimum Button Approach Length	Attribute Rating	ADA Rating	Total
54" or Greater	3	0	3
Less than 54"		4	7

Max Slope Of Landing Pad	Attribute Rating	ADA Rating	Total
2% or Less	3	0	3
2% - 8%		3	6
Greater than 8%		5	8

Parallel Approach	Attribute Rating	ADA Rating	Total
Yes	1	0	1
No		0	1
N/A		0	1

If Parallel, Proximity to Approach	Attribute Rating	ADA Rating	Total
10" or less	4	0	4
Greater than 10"		4	8

If Parallel, Is Button Centered on Pad	Attribute Rating	ADA Rating	Total
Yes	3	0	3
No		3	6
N/A		3	6

Distance Cabinet Protrudes Into Circulation Path	Attribute Rating	ADA Rating	Total
4" or Less	4	0	4
Greater than 4"		5	9

Are Two Concurrent Buttons Present?	Attribute Rating	ADA Rating	Total
Yes	1	0	1
No		0	1

If Concurrent, What is Distance Between Buttons	Attribute Rating	ADA Rating	Total
10' or Greater	3	0	3

Less than 10'		3	6

OBJECTID	Asset Date	Observer/ Organization	Presence of Informational Sign	Vibro-Tactile Button Present	Audible Tone Locator Present	Audible Messages Present	Countdown Display is Visible From Curb Ramp	Obstructions	Pad Material	Crosswalk Direction	Button Face Parallel	Mounting Height	Mushroom Plunger Diameter	Distance Of Open Space Below	Distance From Crosswalk Line	Distance From Curb/Shoulder	Minimum Button Appr Width	Minimum Button Appr Length	Maximum Pad Slope	Parallel Appr	If Parralel, Proximity	If Parallel, Centered	Distance Cabinet Protrudes	Are 2 Conc buttons	If Concurrent, Distance	Importance	Rating
1084	2/29/2016	N30DFS	Yes	No	No	No	Yes	Permanent		East	No	31.0	0.5	34.0	86.0	80.0	0.0	0.0	0.0	No	0.0	N/A		0.0	No	0.0	1	#N/A
1108	3/3/2016	Wilkinson District 1	Yes	No				Temporary	Concrete			25.5	0.0	0.0	0.0	0.0	0.0	0.0	0.0		0.0	N/A		0.0		0.0	1	#N/A
1110	3/7/2016	Wesdot	Yes	No	No	No	Yes	None		South	No	40.0	2.0	34.0	0.0	60.0	80.0	199.0	4.0	No	4.0	No		0.0	No	0.0	1	#N/A
1141												0.0	0.0	0.0	0.0	0.0	0.0	0.0	0.0		0.0	N/A		0.0		0.0	1	#N/A
1146	3/8/2016	N30DFS	Yes	No	No	No	Yes	None	Concrete	South	No	34.0	2.0	27.0	0.0	82.0	71.0	199.0	9.0	No	0.0	N/A		0.0		0.0	1	#N/A
1170	3/9/2016	N30DFS	Yes	No	No	No	Yes	None	Asphalt	East	No	48.0	2.0	43.0	32.0	31.0	0.0	0.0	0.0		0.0	N/A		0.0	No	0.0	1	#N/A
2267	3/16/2016	Wilkinson District 1	Yes	No	No	No	Yes	None	Concrete	South	No	45.0	2.0	0.0	172.0	78.0	64.0	185.0	5.0	Yes	8.0	No		0.0		0.0	1	#N/A
2427	3/28/2016	Wilkinson District 1	No	No	No	No	No	None				0.0	0.0	0.0	0.0	0.0	0.0	0.0	0.0		0.0	N/A		0.0		0.0	1	#N/A
2428	3/28/2016	Wilkinson District 1	No	No	No	No	No	None				0.0	0.0	0.0	0.0	0.0	0.0	0.0	0.0		0.0	N/A		0.0		0.0	1	#N/A
2429	3/28/2016	Wilkinson District 1	No	No	No	No	No	None				0.0	0.0	0.0	0.0	0.0	0.0	0.0	0.0		0.0	N/A		0.0		0.0	1	#N/A
2435	3/29/2016	Wilkinson District 1	No	No	No	No	No	None				0.0	0.0	0.0	0.0	0.0	0.0	0.0	0.0		0.0	N/A		0.0		0.0	1	#N/A
2529	4/7/2016	Ben dot	Yes	No	No	No	Yes	None	Concrete	East	Yes	39.0	2.0	37.0	12.0	65.0	54.0	120.0	0.0	Yes	0.0	Yes		0.0		0.0	1	#N/A
2530	4/7/2016	Ben dot	Yes	No	No	No	Yes	None	Concrete	West	No	50.0	2.0	38.0	12.0	70.0	54.0	60.0	0.0	No	0.0	N/A		0.0		0.0	1	#N/A
2531	4/7/2016	Ben dot	Yes	No	No	No	Yes	None	Concrete	North	No	55.0	2.0	38.0	55.0	72.0	54.0	199.0	4.0	No	0.0	N/A		0.0		0.0	1	#N/A
2554	4/8/2016	Ben dot	Yes	No	No	No	Yes	None	Concrete	South	No	39.0	2.0	39.0	0.0	100.0	62.0	199.0	8.0	No	0.0	N/A		0.0		0.0	1	#N/A
2555	4/8/2016	Ben dot	Yes	No	No	No	Yes	None	Concrete	South	No	34.0	2.0	34.0	0.0	120.0	88.0	58.0	2.0	No	0.0	N/A		0.0		0.0	1	#N/A
2560	4/8/2016	Ben dot	Yes	No	No	No	Yes	None	Asphalt	North	No	35.0	2.0	35.0	30.0	86.0	88.0	199.0	0.0	No	0.0	N/A		0.0		0.0	1	#N/A
2561	4/8/2016	Ben dot	Yes	No	No	No	Yes	None	Concrete	South	Yes	45.0	2.0	35.0	44.0	75.0	56.0	199.0	2.0	No	0.0	N/A		0.0		0.0	1	#N/A
2562	4/8/2016	Ben dot	Yes	No	No	No	Yes	None	Concrete	West	No	36.0	2.0	31.0	36.0	75.0	51.0	199.0	2.0	Yes	0.0	Yes		0.0		0.0	1	#N/A
2563	4/8/2016	Ben dot	Yes	No	No	No	Yes	None	Concrete	North	No	37.0	2.0	37.0	0.0	90.0	57.0	199.0	4.0	No	0.0	N/A		0.0		0.0	1	#N/A
2564	4/8/2016	Ben dot	Yes	No	No	No	Yes	None	Concrete	South	Yes	36.0	2.0	36.0	0.0	70.0	54.0	199.0	2.0	No	0.0	N/A		0.0		0.0	1	#N/A
2583	4/8/2016	Eric survey										0.0	0.0	0.0	0.0	0.0	0.0	0.0	0.0		0.0	N/A		0.0		0.0	1	#N/A
2584	4/8/2016	Eric survey										0.0	0.0	0.0	0.0	0.0	0.0	0.0	0.0		0.0	N/A		0.0		0.0	1	#N/A
2588	4/8/2016	Eric survey										0.0	0.0	0.0	0.0	0.0	0.0	0.0	0.0		0.0	N/A		0.0		0.0	1	#N/A
3602	4/14/2016	Eric survey										0.0	0.0	0.0	0.0	0.0	0.0	0.0	0.0		0.0	N/A		0.0		0.0	1	#N/A
3609	4/14/2016	Eric survey										0.0	0.0	0.0	0.0	0.0	0.0	0.0	0.0		0.0	N/A		0.0		0.0	1	#N/A
3610	4/14/2016	Eric survey										0.0	0.0	0.0	0.0	0.0	0.0	0.0	0.0		0.0	N/A		0.0		0.0	1	#N/A
3611	4/14/2016	Eric survey										0.0	0.0	0.0	0.0	0.0	0.0	0.0	0.0		0.0	N/A		0.0		0.0	1	#N/A
3612	4/14/2016	Eric survey										0.0	0.0	0.0	0.0	0.0	0.0	0.0	0.0		0.0	N/A		0.0		0.0	1	#N/A
3613	4/14/2016	Eric survey										0.0	0.0	0.0	0.0	0.0	0.0	0.0	0.0		0.0	N/A		0.0		0.0	1	#N/A
3614	4/14/2016	Eric survey										0.0	0.0	0.0	0.0	0.0	0.0	0.0	0.0		0.0			0.0		0.0	1	#N/A
3615	4/14/2016	Eric survey										0.0	0.0	0.0	0.0	0.0	0.0	0.0	0.0		0.0	N/A		0.0		0.0	1	#N/A
3626	4/15/2016	Eric survey										0.0	0.0	0.0	0.0	0.0	0.0	0.0	0.0		0.0	N/A		0.0		0.0	1	#N/A
4692	5/12/2016	Melendy dist 1										0.0	0.0	0.0	0.0	0.0	0.0	0.0	0.0		0.0	N/A		0.0		0.0	1	#N/A
1091	2/29/2016	N30DFS	Yes	No	No	No	Yes	None	Concrete	East	Yes	36.0	0.3	36.0	84.0	86.0	60.0	199.0	9.0	Yes	16.0	N/A		0.0	No	0.0	1	59
1083	2/29/2016	N30DFS	Yes	No	No	No	Yes	None	Unpaved	West	Yes	33.0	0.5	43.0	108.0	84.0	0.0	0.0	0.0	No	0.0	N/A		0.0	No	0.0	1	55
4	2/2/2016	N30DFS	Yes	No	No	No	Yes	Permanent	Unpaved	South	Yes	42.0	2.0	36.0	121.0	106.0	0.0	0.0	8.0	No	0.0	N/A		0.0	No	0.0	1	49
1157	3/8/2016	Nichols district 1	Yes	No	Yes	No	Yes	Permanent	Unpaved	South	Yes	33.0	2.0	0.0	0.0	109.0	0.0	0.0	2.5	Yes	45.0	N/A		0.0	No	0.0	1	55
2586	4/8/2016	Eric survey	Yes	No	No	No	Yes	None	Concrete	South	No	36.0	0.5	0.0	188.0	72.0	48.0	199.0	3.9	Yes	16.0	Yes		0.0	No	0.0	1	55
1098	2/29/2016	N30DFS	Yes	No	No	No	Yes	None	Asphalt	North	Yes	34.0	2.0	48.0	0.0	62.0	54.0	199.0	3.0	Yes	12.0	Yes		12.0	No	0.0	1	54
2587	4/8/2016	Eric survey	Yes	No	No	No	Yes	Permanent	Unpaved	East	No	36.0	0.5	0.0	166.0	80.0	0.0	0.0	0.0	N/A	0.0	N/A		0.0	No	0.0	1	53
2190	3/14/2016	N30DFS	Yes	No	No	No	Yes	None	Asphalt	South	No	39.0	2.0	41.0	0.0	128.0	0.0	0.0	6.0	No	0.0	N/A		0.0	No	0.0	1	53
2197	3/14/2016	N30DFS	Yes	No	No	No	Yes	None	Unpaved	East	No	35.5	2.0	35.5	58.0	83.0	0.0	0.0	8.0	No	0.0	N/A		0.0	No	0.0	1	47
2200	3/14/2016	N30DFS	Yes	No	No	No	Yes	None	Unpaved	North	No	37.0	2.0	37.0	58.0	78.0	0.0	0.0	5.0	N/A	0.0	N/A		0.0	No	0.0	1	53
2311	3/22/2016	N30DFSy	Yes	No	No	No	Yes	None	Concrete	South	No	30.0	2.0	32.0	0.0	114.0	56.0	48.0	5.0	Yes	16.0	Yes		0.0	No	0.0	1	53
2585	4/8/2016	Eric survey	Yes	No	No	No	Yes	None	Unpaved	West	No	42.0	0.5	0.0	103.0	88.0	0.0	0.0	0.0	Yes	0.0	N/A		0.0	No	0.0	1	52
1082	2/29/2016	N30DFS	Yes	No	No	No	Yes	None	Concrete	South	No	31.0	0.5	36.0	144.0	68.0	52.0	199.0	2.0	Yes	16.0	N/A		0.0	No	0.0	1	51
1085	2/29/2016	N30DFS	Yes	No	No	No	Yes	None	Asphalt	South	Yes	28.0	2.0	34.0	112.0	84.0	60.0	199.0	4.0	Yes	24.0	Yes		0.0	No	0.0	1	52
2194	3/14/2016	N30DFS	Yes	No	No	No	Yes	None	Asphalt	West	No	35.5	2.0	43.0	100.0	72.0	55.0	72.0	8.0	Yes	17.0	Yes		0.0	No	0.0	1	46
2198	3/14/2016	N30DFS	Yes	No	No	No	No	None	Concrete	South	No	40.0	2.0	40.0	89.0	63.0	60.0	84.0	9.0	Yes	16.0	N/A		0.0	No	0.0	1	54
2201	3/14/2016	N30DFS	No	No	No	No	Yes	None	Concrete	West	No	37.0	2.0	33.0	112.0	84.0	60.0	199.0	8.0	Yes	24.0	Yes		0.0	No	0.0	1	46
2205	3/14/2016	N30DFS	Yes	No	No	No	Yes	None	Concrete	West	No	37.0	2.0	33.5	65.0	85.0	60.0	199.0	8.0	Yes	25.0	Yes		0.0	No	0.0	1	46
2217	3/15/2016	Wesdot	Yes	No	No	No	Yes	None	Concrete	East	Yes	41.0	2.0	37.0	70.0	125.0	42.0	58.0	4.0	No	36.0	Yes		0.0	No	0.0	1	52
2341	3/22/2016	N30DFS	Yes	No	No	No	Yes	None	Asphalt	West	No	33.5	2.0	37.0	176.0	72.0	54.0	199.0	7.0	Yes	18.0	Yes		0.0	No	0.0	1	52
3637	4/15/2016	Eric survey	Yes	No	No	No	Yes	None	Asphalt	South	No	31.0	2.0	0.0	101.0	87.0	62.0	199.0	2.2	Yes	18.0	Yes		18.0	Yes	235.0	1	52
1099	2/29/2016	N30DFS	Yes	No	No	No	Yes	Temporary	Asphalt	East	Yes	46.0	2.0	46.0	158.0	88.0	64.0	199.0	7.0	Yes	24.0	Yes		0.0	No	0.0	1	51
1100	2/29/2016	N30DFS	Yes	No	No	No	Yes	None	Asphalt	East	Yes	48.0	2.0	49.0	86.0	70.0	55.0	0.0	6.0	Yes	6.0	Yes		0.0	No	0.0	1	51
2204	3/14/2016	N30DFS	Yes	No	No	No	Yes	None	Unpaved	North	No	37.0	2.0	37.0	70.0	73.0	0.0	0.0	2.0	N/A	0.0	N/A		0.0	No	0.0	1	50
2313	3/22/2016	N30DFS	Yes	No	No	No	Yes	None	Concrete	West	No	43.0	2.0	46.0	192.0	113.0	48.0	48.0	3.0	No	0.0	N/A		0.0	No	0.0	1	51
2351	3/23/2016	Wesdot	Yes	No	No	No	Yes	Permanent	Unpaved	West	No	35.0	2.0	35.0	113.0	113.0	0.0	0.0	0.0	No	0.0	N/A		0.0	No	0.0	1	50
2374	3/23/2016	Wilkinson District 1	Yes	No	No	No	Yes	Permanent	Asphalt	East	No	38.0	2.0	0.0	20.0	17.0	24.0	72.0	4.0	Yes	17.0	Yes		0.0	No	0.0	1	51
1194	3/10/2016	Nichols district 1	Yes	No	Yes	No	Yes	None	Concrete	South	Yes	39.0	2.0	0.0	114.0	83.0	77.0	125.0	4.5	Yes	16.0	No		0.0	No	0.0	1	50
1195	3/10/2016	Nichols district 1	Yes	No	Yes	No	Yes	Temporary	Concrete	North	Yes	38.5	2.0	0.0	86.0	105.0	75.0	60.0	11.0	No	16.0	N/A		0.0	No	0.0	1	52
2207	3/14/2016	Nichols district 1	Yes	No	No	No	Yes	None	Concrete	West	Yes	32.0	2.0	0.0	208.0	90.0	85.0	123.0	11.0	Yes	25.0	Yes		0.0	No	0.0	1	52
2305	3/22/2016	Wesdot	Yes	No	No	No	Yes	None	Asphalt	East	No	36.0	0.1	36.0	26.0	72.0	60.0	199.0	4.0	No	0.0	N/A		0.0	No	0.0	1	50
2328	3/22/2016	Nichols district 1	Yes	No	No	No	Yes	None	Asphalt	South	Yes	35.0	2.0	0.0	85.0	85.0	85.0	199.0	2.5	Yes	17.0	Yes		0.0	No	0.0	1	50
2550	4/7/2016	Eric survey	Yes	No	Yes	Yes	Yes	None	Concrete	North	Yes	41.0	2.0	0.0	93.0	80.0	74.0	125.0	2.2	Yes	20.0	Yes		0.0	No	0.0	1	50
2575	4/8/2016	Eric survey	Yes	No	No	No	Yes	None	Asphalt	West	No	35.0	2.0	0.0	114.0	83.0	55.0	199.0	3.5	Yes	23.0	Yes		0.0	No	0.0	1	50
3632	4/15/2016	Eric survey	Yes	No	No	No	Yes	None	Asphalt	South	No	40.0	2.0	0.0	165.0	91.0	75.0	199.0	4.6	Yes	12.0	Yes		0.0	No	0.0	1	50
3636	4/15/2016	Eric survey	Yes	No	No	No	Yes	None	Asphalt	North	No	31.0	2.0	0.0	90.0	101.0	64.0	199.0	11.7	Yes	32.0	Yes		0.0	No	0.0	1	52
3643	4/15/2016	Eric survey	Yes	No	No	No	Yes	None	Asphalt	East	Yes	40.0	2.0	0.0	87.0	134.0	60.0	199.0	4.4	Yes	22.0	Yes		0.0	No	0.0	1	50
3644	4/15/2016	Eric survey	Yes	No	No	No	Yes	None	Asphalt	West	No	37.0	2.0	0.0	172.0	80.0	55.0	164.0	5.6	Yes	20.0	Yes		0.0	No	0.0	1	50
5	2/2/2016	N30DFS	Yes	No	No	No	Yes	Permanent	Concrete	North	No	38.0	2.0	34.0	18.0	24.0	0.0	199.0	6.0	No	0.0	N/A		0.0	No	0.0	1	49
1109	3/7/2016	Wes dot	Yes	No	No	No	Yes	None	Concrete	East	No	40.0	2.0	37.0	36.0	106.0	30.0	80.0	6.0	No	0.0	No		0.0	No	0.0	1	49
1131	3/8/2016	Ben dot	Yes	No	No	No	Yes	None	Concrete	East	No	38.0	2.0	38.0	0.0	56.0	51.0	199.0	10.0	Yes	36.0	No		0.0	No	0.0	1	51
1156	3/8/2016	Wilkinson District 1	Yes	No	Yes	No	Yes	None	Asphalt	East	No	50.0	2.0	0.0	116.0	75.0	51.0	108.0	9.0	Yes	12.0	No		0.0	No	0.0	1	51
1169	3/9/2016	N30DFS	Yes	No	No	No	Yes	None	Asphalt	West	Yes	42.5	2.0	42.5	0.0	81.0	51.0	199.0	6.0	Yes	9.0	Yes		9.0	No	0.0	1	49
2189	3/14/2016	N30DFS	Yes	No	No	No	Yes	None	Concrete	West	Yes	39.0	2.0	39.0	12.0	94.0	60.0	199.0	4.0	Yes	24.0	Yes		0.0	No	0.0	1	49
2195	3/14/2016	N30DFS	Yes	No	No	No	Yes	None	Asphalt	East	Yes	38.0	2.0	33.0	0.0	87.0	60.0	84.0	5.0	Yes	27.0	Yes		0.0	No	0.0	1	49
2216	3/15/2016	Wesdot	Yes	No	No	No	Yes	None	Concrete	West	Yes	37.0	2.0	33.0	0.0	75.0	56.0	199.0	4.0	Yes	36.0	No		0.0	No	0.0	1	49
2239	3/16/2016	N30DFS	Yes	No	No	No	Yes	None	Concrete	South	No	33.0	2.0	28.0	15.0	69.0	57.0	199.0	8.0	Yes	12.0	No		0.0	No	0.0	1	43
2241	3/16/2016	N30DDFS	Yes	No	No	No	Yes	None	Concrete	North	No	32.0	2.0	32.0	48.0	80.0	62.0	199.0	8.0	Yes	18.0	No		0.0	No	0.0	1	43
2242	3/16/2016	N30DFS	Yes	No	No	No	Yes	None	Concrete	East	Yes	36.0	2.0	41.0	11.0	84.0	60.0	199.0	15.0	Yes	24.0	No		0.0	No	0.0	1	51
2244	3/16/2016	N30DFS	Yes	No	No	No	Yes	None	Concrete	East	Yes	31.0	2.0	42.0	12.0	82.0	60.0	199.0	10.0	Yes	22.0	No		0.0	No	0.0	1	51
2245	3/16/2016	N30DFS	Yes	No	No	No	Yes	None	Concrete	West	Yes	31.5	2.0	40.5	4.0	76.0	60.0	199.0	12.0	Yes	16.0	No		0.0	No	0.0	1	51
2246	3/16/2016	N30DFS	Yes	No	No	No	Yes	None	Concrete	East	Yes	35.0	2.0	41.0	19.0	91.0	60.0	199.0	10.0	Yes	31.0	No		0.0	No	0.0	1	51
2248	3/16/2016	N30DFS	Yes	No	No	No	Yes	None	Concrete	West	Yes	38.0	2.0	42.0	0.0	72.0	60.0	199.0	10.0	Yes	12.0	No		0.0	No	0.0	1	51
2249	3/16/2016	N30DFS	Yes	No	No	No	Yes	None	Concrete	East	Yes	36.5	2.0	39.5	0.0	71.0	60.0	199.0	8.0	Yes	11.0	No		0.0	No	0.0	1	43
2250	3/16/2016	N30DFS	Yes	No	No	No	Yes	None	Concrete	West	Yes	41.0	2.0	41.0	12.0	84.0	60.0	199.0	8.0	Yes	24.0	No		0.0	No	0.0	1	43
2275	3/17/2016	Nichols district 1	Yes	No	No	No	Yes	None	Asphalt	West	No	44.0	2.0	0.0	105.0	144.0	139.0	80.0	6.0	Yes	92.0	No		0.0	No	0.0	1	49
2337	3/22/2016	N30DFS	Yes	No	No	No	Yes	None	Asphalt	South	Yes	32.0	2.0	44.0	12.0	72.0	67.0	199.0	3.0	Yes	11.0	Yes		0.0	No	0.0	1	49
2343	3/22/2016	N30DFS	Yes	No	No	No	Yes	Permanent	Asphalt	North	Yes	32.0	2.0	29.0	29.0	74.0	56.0	199.0	7.0	Yes	18.0	No		0.0	No	0.0	1	49
2375	3/23/2016	Nichols district 1	No	No	No	No	Yes	None	Other	North	No	28.5	2.0	0.0	148.0	106.0	0.0	0.0	0.0	No	0.0	N/A		0.0	No	0.0	1	48
2476	4/5/2016	Eric survey	Yes	No	No	No	Yes	None	Concrete	South	No	43.0	2.0	0.0	117.0	101.0	45.0	101.0	9.7	Yes	44.0	Yes		0.0	No	0.0	1	51
2493	4/5/2016	Eric survey	Yes	No	No	No	Yes	Permanent	Unpaved	North	No	29.0	2.0	0.0	108.0	53.0	0.0	0.0	0.0	No	0.0	N/A		0.0	No	0.0	1	48
2506	4/6/2016	Eric survey	Yes	No	No	No	Yes	None	Asphalt	West	No	49.0	2.0	0.0	140.0	88.0	50.0	199.0	5.2	Yes	32.0	Yes		0.0	No	0.0	1	49
1086	2/29/2016	N30DFS	Yes	No	No	No	Yes	None	Asphalt	North	Yes	25.0	2.0	35.0	84.0	60.0	60.0	199.0	5.0	No	0.0	N/A		0.0	No	0.0	1	48
1088	2/29/2016	N30DFS	Yes	No	No	No	Yes	None	Asphalt	North	No	32.0	2.0	35.0	140.0	67.0	60.0	199.0	3.0	No	0.0	N/A		0.0	No	0.0	1	48
1090	2/29/2016	N30DFS	Yes	No	Yes	No	Yes	None	Concrete	South	No	33.0	2.0	39.0	94.0	84.0	67.0	199.0	13.0	No	0.0	N/A		0.0	No	0.0	1	50
1094	2/29/2016	N30DFS	Yes	Yes	Yes	No	Yes	None	Unpaved	West	No	34.0	2.0	37.0	18.0	40.0	0.0	0.0	0.0	No	0.0	N/A		0.0	No	0.0	1	47
1136	3/8/2016	Ben dot	Yes	No	Yes	No	Yes	None	Concrete	West	No	42.0	2.0	42.0	24.0	74.0	70.0	199.0	8.0	Yes	18.0	No		0.0	No	0.0	1	42
1138	3/8/2016	N30DFS	Yes	No	No	No	No	None	Concrete	North	Yes	31.0	2.0	31.0	96.0	57.0	199.0	199.0	4.0	No	0.0	N/A		0.0	No	0.0	1	48
1161	3/9/2016	N30DFS	Yes	No	No	No	Yes	None	Concrete	West	Yes	39.0	2.0	33.0	69.0	52.0	56.0	152.0	7.0	No	0.0	N/A		0.0	No	0.0	1	48

1165	3/9/2016 N30DFS	Yes	No	No	No	Yes	None	Concrete	East	No	45.0	2.0	36.0	0.0	64.0	72.0	199.0	4.0 Yes	12.0 No	0.0 No	0.0	1	48
2192	3/14/2016 N30DFS	Yes	No	No	No	Yes	None	Asphalt	East	No	39.0	2.0	41.0	0.0	126.0	0.0	0.0	2.0 No	0.0 N/A	0.0 No	0.0	1	47
2202	3/14/2016 N30DFS	Yes	No	No	No	Yes	None	Asphalt	South	No	37.0	2.0	37.0	96.0	91.0	92.0	96.0	3.0 Yes	0.0 No	0.0 No	0.0	1	48
2214	3/15/2016 Ben dot	Yes	No	No	No	Yes	None	Concrete	West	Yes	44.0	2.0	41.0	6.0	75.0	57.0	199.0	8.0 Yes	29.0 No	0.0 No	0.0	1	42
2251	3/16/2016 N30DFS	Yes	No	No	No	Yes	None	Concrete	East	Yes	42.0	2.0	42.0	0.0	72.0	60.0	199.0	11.0 Yes	12.0 No	0.0 No	0.0	1	50
2252	3/16/2016 N30DFS	Yes	No	No	No	Yes	None	Concrete	West	Yes	44.0	2.0	42.0	12.0	88.0	60.0	199.0	10.0 Yes	28.0 No	0.0 No	0.0	1	50
2281	3/18/2016 Wesdot	Yes	No	Yes	No	Yes	None	Asphalt	West	No	41.0	2.0	39.0	86.0	86.0	56.0	199.0	6.0 Yes	0.0 Yes	0.0 No	0.0	1	48
2308	3/22/2016 N30DFS	Yes	No	No	No	Yes	None	Concrete	South	Yes	27.0	2.0	34.0	64.0	52.0	52.0	72.0	4.0 Yes	8.0 No	0.0 No	0.0	1	48
2320	3/22/2016 N30DFS	Yes	No	No	No	Yes	None	Concrete	East	Yes	24.5	2.0	30.5	91.0	96.0	48.0	199.0	5.0 No	0.0 N/A	0.0 No	0.0	1	48
2342	3/22/2016 N30DFS	Yes	No	No	No	Yes	None	Asphalt	East	No	27.5	2.0	35.0	70.0	70.0	60.0	199.0	3.0 Yes	0.0 Yes	0.0 No	0.0	1	48
2344	3/22/2016 N30DFS	Yes	No	No	No	Yes	Temporary	Unpaved	South	Yes	34.0	2.0	34.0	44.0	44.0	0.0	0.0	1.0 N/A	0.0 N/A	0.0 No	0.0	1	47
2381	3/24/2016 Wesdot	Yes	No	No	No	Yes	Permanent	Unpaved	South	No	37.0	2.0	31.0	24.0	105.0	0.0	0.0	0.0 No	0.0 N/A	0.0 No	0.0	1	47
2404	3/24/2016 Wesdot	Yes	No	No	No	Yes	None	Concrete	North	No	40.0	2.0	37.0	98.0	80.0	60.0	199.0	3.0 No	0.0 No	0.0 No	0.0	1	48
2417	3/28/2016 Wesdot	Yes	No	No	No	Yes	None	Asphalt	South	No	38.0	2.0	28.0	160.0	94.0	52.0	199.0	6.0 No	0.0 N/A	0.0 No	0.0	1	48
2492	4/5/2016 Eric survey	Yes	No	No	No	Yes	None	Unpaved	South	No	46.0	2.0	0.0	110.0	44.0	0.0	0.0	0.0 No	0.0 N/A	0.0 No	0.0	1	47
2522	4/6/2016 Eric survey	Yes	No	No	No	Yes	None	Unpaved	East	No	49.0	2.0	0.0	72.0	140.0	0.0	0.0	0.0 No	0.0 N/A	0.0 No	0.0	1	47
3631	4/15/2016 Eric survey	Yes	No	No	No	Yes	None	Asphalt	North	Yes	37.0	0.3	0.0	48.0	68.0	58.0	199.0	6.3 Yes	6.0 Yes	0.0 No	0.0	1	48
3645	4/15/2016 Eric survey	Yes	No	No	No	Yes	None	Concrete	East	No	36.0	2.0	33.0	77.0	54.0	53.0	138.0	6.8 Yes	0.0 No	4.0 No	0.0	1	48
4663	4/29/2016 Wesdot	Yes	No	No	No	Yes	None	Unpaved	North	No	41.0	2.0	37.0	80.0	140.0	60.0	64.0	15.0 No	0.0 N/A	0.0 No	0.0	1	50
4664	4/29/2016 Wesdot	Yes	No	No	No	Yes	Permanent	Asphalt	South	No	39.0	2.0	39.0	130.0	90.0	63.0	199.0	4.0 No	0.0 N/A	0.0 No	0.0	1	48
4674	4/29/2016 Wesdot	Yes	No	No	No	Yes	None	Asphalt	East	No	40.0	2.0	40.0	88.0	70.0	56.0	84.0	3.0 No	0.0 No	0.0 No	0.0	1	48
1126	3/8/2016 Ben dot	Yes	No	No	No	Yes	None	Unpaved	East	No	44.0	2.0	41.0	72.0	78.0	72.0	78.0	10.0 No	0.0 N/A	0.0 No	0.0	1	49
1134	3/8/2016 Ben dot	Yes	No	Yes	No	Yes	None	Concrete	South	Yes	42.0	2.0	37.0	66.0	100.0	95.0	199.0	10.0 No	0.0 N/A	0.0 No	0.0	1	49
1184	3/9/2016 Wilkinson District 1	Yes	No	No	No	No	None	Concrete	West	No	36.0	2.0	0.0	0.0	74.0	55.0	80.0	6.0 Yes	12.0 No	0.0 No	0.0	1	47
1185	3/9/2016 Wilkinson District 1	Yes	No	Yes	No	Yes	None	Concrete	South	Yes	33.0	2.0	0.0	5.0	64.0	54.0	75.0	4.0 Yes	18.0 No	0.0 No	0.0	1	47
1188	3/9/2016 Wilkinson District 1	Yes	No	Yes	No	Yes	None	Concrete	North	No	38.0	2.0	0.0	0.0	84.0	60.0	65.0	4.0 Yes	24.0 No	0.0 No	0.0	1	47
1190	3/10/2016 Wilkinson District 1	Yes	No	Yes	No	Yes	None	Concrete	North	Yes	38.0	2.0	0.0	3.0	137.0	55.0	70.0	3.0 Yes	14.0 No	0.0 No	0.0	1	47
1191	3/10/2016 Wilkinson District 1	Yes	No	Yes	No	Yes	None	Concrete	East	No	38.0	2.0	0.0	0.0	72.0	55.0	60.0	3.0 Yes	16.0 No	0.0 No	0.0	1	47
1193	3/9/2016 Nichols district 1	Yes	No	Yes	No	Yes	None	Concrete	West	No	41.0	2.0	0.0	20.0	76.0	76.0	232.0	3.0 Yes	14.5 Yes	0.0 No	0.0	1	47
2206	3/14/2016 Nichols district 1	Yes	No	No	No	Yes	None	Concrete	East	No	37.5	2.0	0.0	0.0	80.0	75.0	142.0	4.0 Yes	19.0 No	0.0 No	0.0	1	47
2210	3/14/2016 Nichols district 1	No	No	Yes	No	Yes	None	Concrete	West	Yes	39.0	2.0	0.0	0.0	92.0	87.0	60.0	12.0 Yes	13.0 Yes	0.0 No	0.0	1	49
2254	3/14/2016 Nichols district 1	No	No	Yes	No	Yes	None	Asphalt	West	Yes	38.0	2.0	0.0	0.0	73.0	68.0	120.0	5.0 Yes	12.0 No	0.0 No	0.0	1	47
2255	3/16/2016 Nichols district 1	No	No	Yes	No	Yes	None	Concrete	East	Yes	36.0	2.0	0.0	0.0	79.0	75.0	62.0	3.0 Yes	12.0 Yes	0.0 No	0.0	1	47
2256	3/16/2016 Nichols district 1	Yes	No	Yes	No	Yes	None	Asphalt	West	Yes	34.0	2.0	0.0	45.0	110.0	105.0	108.0	5.5 Yes	45.0 Yes	0.0 No	0.0	1	47
2271	3/17/2016 Nichols district 1	Yes	No	No	No	Yes	None	Concrete	West	Yes	36.0	2.0	0.0	0.0	90.0	85.0	170.0	13.0 Yes	27.0 No	0.0 No	0.0	1	49
2272	3/17/2016 Nichols district 1	Yes	No	Yes	No	Yes	None	Concrete	East	No	35.0	2.0	0.0	0.0	77.0	71.0	60.0	2.5 Yes	15.0 Yes	0.0 No	0.0	1	47
2274	3/17/2016 Nichols district 1	Yes	No	Yes	No	Yes	None	Concrete	North	No	35.0	2.0	0.0	0.0	84.0	79.0	270.0	8.0 Yes	23.0 Yes	0.0 No	0.0	1	41
2292	3/21/2016 Wilkinson District 1	Yes	No	No	No	Yes	None	Asphalt	North	Yes	36.0	2.0	0.0	33.0	185.0	60.0	72.0	7.0 Yes	33.0 Yes	0.0 No	0.0	1	47
2294	3/21/2016 Wilkinson District 1	Yes	No	No	No	Yes	None	Concrete	North	No	39.0	2.0	0.0	0.0	84.0	60.0	72.0	6.0 Yes	22.0 Yes	0.0 No	0.0	1	47
2298	3/22/2016 Wesdot	Yes	No	No	No	Yes	None	Asphalt	West	No	48.0	2.0	30.0	120.0	80.0	76.0	199.0	4.0 No	0.0 N/A	0.0 No	0.0	1	47
2300	3/22/2016 Wilkinson District 1	Yes	No	No	No	Yes	None	Asphalt	North	No	33.0	2.0	0.0	0.0	115.0	60.0	72.0	4.0 Yes	12.0 No	0.0 No	0.0	1	47
2301	3/22/2016 Wilkinson District 1	Yes	No	No	No	Yes	None	Asphalt	South	No	33.0	2.0	0.0	4.0	115.0	90.0	84.0	6.0 Yes	12.0 Yes	0.0 No	0.0	1	47
2303	3/22/2016 Nichols district 1	Yes	No	Yes	No	Yes	None	Concrete	East	No	38.5	2.0	0.0	0.0	94.0	94.0	78.0	3.0 Yes	22.0 Yes	0.0 No	0.0	1	47
2310	3/22/2016 N30DFS	No	No	No	No	Yes	None	Asphalt	North	Yes	26.0	2.0	28.0	72.0	80.0	52.0	54.0	1.0 Yes	28.0 No	0.0 No	0.0	1	46
2319	3/22/2016 N30DFS	Yes	No	No	No	Yes	None	Concrete	South	No	30.0	2.0	31.5	140.0	70.0	180.0	0.0	0.0 No	0.0 N/A	0.0 No	0.0	1	46
2329	3/22/2016 Wilkinson District 1	Yes	No	No	No	Yes	None	Asphalt	West	No	36.0	2.0	0.0	0.0	100.0	55.0	72.0	6.0 Yes	32.0 Yes	0.0 No	0.0	1	47
2330	3/22/2016 Wilkinson District 1	Yes	No	No	No	Yes	None	Asphalt	East	No	39.0	2.0	0.0	0.0	80.0	55.0	72.0	11.0 Yes	18.0 Yes	0.0 No	0.0	1	49
2331	3/22/2016 Wilkinson District 1	Yes	No	No	No	Yes	None	Asphalt	South	No	36.0	2.0	0.0	4.0	90.0	55.0	72.0	7.0 Yes	30.0 Yes	0.0 No	0.0	1	47
2371	3/23/2016 Wilkinson District 1	Yes	No	No	No	Yes	Permanent	Asphalt	South	No	38.0	2.0	0.0	0.0	96.0	70.0	72.0	3.0 Yes	24.0 Yes	0.0 No	0.0	1	47
2372	3/23/2016 Wilkinson District 1	Yes	No	No	No	Yes	None	Other	West	Yes	40.0	2.0	0.0	55.0	138.0	32.0	48.0	3.0 Yes	6.0 Yes	0.0 No	0.0	1	47
2377	3/23/2016 Nichols district 1	Yes	No	No	No	Yes	Permanent	Concrete	North	No	37.5	2.3	0.0	0.0	82.0	77.0	148.0	8.5 Yes	21.0 Yes	0.0 No	0.0	1	49
2378	3/23/2016 Nichols district 1	Yes	No	No	No	Yes	None	Concrete	South	No	30.5	2.3	0.0	0.0	70.0	65.0	118.0	10.0 Yes	11.0 Yes	0.0 No	0.0	1	49
2380	3/23/2016 Nichols district 1	Yes	No	No	No	Yes	None	Asphalt	South	Yes	32.5	2.3	0.0	0.0	82.0	77.0	199.0	8.0 Yes	20.0 Yes	0.0 No	0.0	1	41
2434	3/29/2016 Wilkinson District 1	Yes	No	No	No	Yes	None	Asphalt	East	No	38.0	2.0	0.0	0.0	105.0	53.0	72.0	5.0 Yes	12.0 Yes	0.0 No	0.0	1	47
2437	3/29/2016 Nichols district 1	Yes	No	No	No	Yes	None	Concrete	North	Yes	34.5	2.3	0.0	0.0	72.0	67.0	132.0	8.0 Yes	12.0 Yes	0.0 No	0.0	1	41
2438	3/29/2016 Nichols district 1	Yes	No	No	No	Yes	None	Concrete	South	No	31.0	2.3	0.0	0.0	94.0	89.0	199.0	8.5 Yes	34.0 No	0.0 No	0.0	1	49
2439	3/29/2016 Nichols district 1	Yes	No	No	No	Yes	None	Asphalt	North	No	37.5	2.3	0.0	0.0	124.0	119.0	199.0	13.0 Yes	24.0 No	0.0 No	0.0	1	49
2477	4/5/2016 Eric survey	Yes	No	No	No	Yes	None	Concrete	East	No	40.0	2.0	0.0	16.0	165.0	65.0	199.0	5.3 Yes	22.0 Yes	0.0 No	0.0	1	47
2504	4/6/2016 Eric survey	Yes	No	No	No	Yes	None	Concrete	East	No	33.0	2.0	0.0	12.0	76.0	66.0	199.0	2.3 Yes	12.0 Yes	0.0 No	0.0	1	47
2511	4/6/2016 Eric survey	Yes	No	No	No	Yes	None	Concrete	East	Yes	32.0	2.0	0.0	32.0	74.0	59.0	199.0	4.0 Yes	15.0 Yes	0.0 No	0.0	1	47
2512	4/6/2016 Eric survey	Yes	No	No	No	Yes	None	Concrete	West	Yes	34.0	2.0	0.0	8.0	51.0	36.0	199.0	3.5 Yes	14.0 No	0.0 No	0.0	1	47
2546	4/7/2016 Eric survey	Yes	No	Yes	Yes	Yes	None	Concrete	North	No	37.0	2.0	0.0	24.0	82.0	60.0	199.0	4.7 Yes	12.0 Yes	0.0 No	0.0	1	47
2565	4/8/2016 Eric survey	Yes	No	No	No	Yes	None	Concrete	South	No	38.0	2.0	0.0	41.0	73.0	56.0	199.0	3.1 Yes	15.0 Yes	0.0 No	0.0	1	47
2574	4/8/2016 Eric survey	Yes	No	No	No	Yes	None	Concrete	West	Yes	35.0	2.0	0.0	68.0	75.0	55.0	199.0	9.0 Yes	12.0 Yes	0.0 Yes	14.0	1	49
2581	4/8/2016 Eric survey	Yes	No	No	No	Yes	Permanent	Asphalt	East	No	36.0	2.0	0.0	24.0	82.0	56.0	199.0	5.0 Yes	24.0 Yes	0.0 No	0.0	1	47
2582	Eric survey	Yes	No	No	No	Yes	None	Concrete	South	No	36.0	2.0	0.0	6.0	85.0	60.0	199.0	3.2 Yes	16.0 Yes	0.0 No	0.0	1	47
2589	4/13/2016 Eric survey	Yes	No	No	No	Yes	None	Concrete	North	Yes	38.0	2.0	0.0	0.0	90.0	56.0	199.0	7.6 Yes	43.0 Yes	0.0 No	0.0	1	47
2592	4/13/2016 Eric survey	Yes	No	No	No	Yes	None	Concrete	East	No	41.0	2.0	0.0	6.0	105.0	56.0	199.0	3.7 Yes	40.0 Yes	0.0 No	0.0	1	47
2593	4/13/2016 Eric survey	Yes	No	No	No	Yes	None	Concrete	North	Yes	41.0	2.0	0.0	26.0	108.0	56.0	199.0	3.0 Yes	41.0 Yes	0.0 No	0.0	1	47
2594	4/13/2016 Eric survey	Yes	Yes	Yes	Yes	Yes	None	Concrete	West	Yes	38.0	2.0	0.0	0.0	80.0	60.0	199.0	2.6 Yes	15.0 Yes	0.0 No	0.0	1	47
2597	4/13/2016 Eric survey	Yes	Yes	Yes	Yes	Yes	None	Concrete	North	Yes	35.0	2.0	0.0	20.0	85.0	60.0	199.0	8.6 Yes	15.0 Yes	0.0 No	0.0	1	49
2601	4/13/2016 Eric survey	Yes	No	No	No	Yes	None	Concrete	North	Yes	41.0	2.0	0.0	21.0	90.0	60.0	112.0	9.7 Yes	20.0 No	0.0 No	0.0	1	49
2602	4/13/2016 Eric survey	Yes	No	No	No	Yes	None	Concrete	South	No	36.0	2.0	0.0	28.0	85.0	60.0	199.0	5.5 Yes	16.0 Yes	0.0 No	0.0	1	47
3604	4/14/2016 Eric survey	Yes	Yes	Yes	Yes	Yes	None	Concrete	West	Yes	34.0	2.0	0.0	8.0	89.0	56.0	82.0	3.3 Yes	24.0 No	0.0 No	0.0	1	47
3605	4/14/2016 Eric survey	Yes	Yes	Yes	Yes	Yes	None	Concrete	East	Yes	38.0	2.0	0.0	8.0	82.0	56.0	94.0	8.6 Yes	22.0 Yes	0.0 No	0.0	1	49
3616	4/14/2016 Eric survey	Yes	No	No	No	Yes	None	Concrete	East	Yes	36.0	2.0	0.0	0.0	75.0	54.0	199.0	6.8 Yes	14.0 Yes	0.0 No	0.0	1	47
3620	4/14/2016 Eric survey	Yes	No	No	No	Yes	None	Asphalt	East	Yes	35.0	2.0	0.0	8.0	87.0	54.0	199.0	3.1 Yes	24.0 Yes	0.0 No	0.0	1	47
3621	4/14/2016 Eric survey	Yes	No	No	No	Yes	None	Concrete	West	Yes	35.0	2.0	0.0	28.0	68.0	54.0	142.0	4.0 Yes	12.0 No	0.0 No	0.0	1	47
3622	4/14/2016 Eric survey	Yes	No	No	No	Yes	None	Concrete	East	Yes	36.0	2.0	0.0	16.0	76.0	56.0	142.0	9.4 Yes	12.0 No	0.0 No	0.0	1	49
3623	4/14/2016 Eric survey	Yes	No	No	No	Yes	None	Concrete	West	Yes	36.0	2.0	0.0	6.0	110.0	56.0	134.0	6.4 Yes	50.0 No	0.0 No	0.0	1	47
3625	4/14/2016 Eric survey	Yes	No	No	No	No	None	Concrete	East	Yes	34.0	2.0	0.0	0.0	76.0	58.0	199.0	4.5 Yes	14.0 Yes	0.0 No	0.0	1	47
3627	4/15/2016 Eric survey	Yes	No	No	No	Yes	None	Asphalt	East	No	40.0	2.0	0.0	20.0	98.0	58.0	199.0	9.8 Yes	34.0 Yes	0.0 No	0.0	1	49
3633	4/15/2016 Eric survey	Yes	No	No	No	Yes	Permanent	Asphalt	North	No	36.0	2.0	0.0	16.0	75.0	58.0	199.0	3.8 Yes	16.0 Yes	0.0 No	0.0	1	47
3634	4/15/2016 Eric survey	Yes	No	No	No	Yes	None	Asphalt	West	No	37.0	2.0	0.0	26.0	91.0	67.0	199.0	7.1 Yes	22.0 Yes	0.0 No	0.0	1	47
3639	4/15/2016 Eric survey	Yes	No	No	No	Yes	None	Concrete	South	No	34.0	2.0	0.0	26.0	90.0	60.0	68.0	4.6 Yes	20.0 No	0.0 No	0.0	1	47
3646	4/15/2016 Eric survey	Yes	No	No	No	Yes	None	Asphalt	East	Yes	40.0	2.0	0.0	3.0	97.0	62.0	199.0	3.6 Yes	52.0 No	0.0 No	0.0	1	47
4694	5/16/2016 Nichols dist 1	Yes	No	No	No	Yes	None	Asphalt	North	Yes	37.0	2.0	0.0	12.0	81.0	81.0	199.0	5.0 Yes	22.0 No	0.0 No	0.0	1	47
1148	3/8/2016 N30DFS	Yes	No	No	No	Yes	None	Concrete	West	No	31.0	2.0	31.0	0.0	75.0	60.0	199.0	10.0 Yes	15.0 Yes	0.0 Yes	1224.0	1	48
1151	3/8/2016 N30DFS	Yes	No	No	No	Yes	None	Concrete	East	No	32.0	2.0	32.0	15.0	77.0	65.0	199.0	3.0 Yes	12.0 Yes	0.0 Yes	717.0	1	46
1153	3/8/2016 Wilkinson District 1	Yes	No	Yes	No	Yes	Temporary	Asphalt	North	No	53.0	2.0	0.0	60.0	22.0	54.0	84.0	9.0 Yes	24.0 Yes	0.0 No	0.0	1	48
1160	3/8/2016 Nichols district 1	Yes	No	Yes	No	Yes	None	Concrete	South	No	43.0	2.0	0.0	0.0	82.0	78.0	72.0	14.0 Yes	16.0 No	0.0 No	0.0	1	48
2264	3/16/2016 Wilkinson District 1	Yes	No	No	No	Yes	None	Asphalt	West	No	38.0	2.0	0.0	72.0	56.0	50.0	120.0	8.0 Yes	4.0 No	0.0 No	0.0	1	40
2266	3/16/2016 Wilkinson District 1	Yes	No	No	No	Yes	None	Asphalt	North	Yes	35.0	2.0	0.0	98.0	63.0	60.0	87.0	4.0 No	0.0 N/A	0.0 No	0.0	1	46
2277	3/17/2016 Nichols district 1	Yes	No	No	No	Yes	None	Asphalt	North	No	48.0	2.0	0.0	2.0	72.0	72.0	70.0	5.0 Yes	19.0 Yes	0.0 No	0.0	1	46
2278	3/17/2016 Nichols district 1	Yes	No	No	No	Yes	None	Asphalt	East	No	45.0	2.0	0.0	36.0	80.0	80.0	62.0	4.0 Yes	22.0 Yes	0.0 No	0.0	1	46
2315	3/22/2016 N30DFS	Yes	No	No	No	Yes	None	Asphalt	South	No	33.0	2.0	46.0	0.0	77.0	63.0	199.0	6.0 Yes	12.0 Yes	0.0 Yes	439.0	1	46
2332	3/22/2016 Wilkinson District 1	Yes	No	No	No	Yes	None	Asphalt	North	No	43.0	2.0	0.0	0.0	108.0	60.0	72.0	7.0 Yes	26.0 Yes	0.0 No	0.0	1	46
2362	3/23/2016 Wilkinson District 1	Yes	No	No	No	Yes	None	Brick	East	Yes	44.0	2.0	0.0	60.0	115.0	42.0	48.0	3.0 Yes	6.0 Yes	0.0 No	0.0	1	46
2363	3/23/2016 Wilkinson District 1	Yes	No	No	No	Yes	None	Other	South	No	51.0	2.0	0.0	0.0	115.0	32.0	48.0	3.0 Yes	8.0 Yes	0.0 No	0.0	1	46
2364	3/23/2016 Wilkinson District 1	Yes	No	No	No	Yes	None	Asphalt	West	Yes	43.0	2.0	0.0	0.0	24.0	36.0	48.0	4.0 No	0.0 N/A	0.0 No	0.0	1	46
2365	3/23/2016 Wilkinson District 1	Yes	No	No	No	Yes	None	Asphalt	North	No	52.0	2.0	0.0	0.0	90.0	60.0	72.0	5.0 Yes	15.0 Yes	0.0 No	0.0	1	46
2376	3/23/2016 Nichols district 1	No	No	No	No	Yes	None	Asphalt	South	No	33.0	2.0	0.0	66.0	94.0	94.0	60.0	2.5 Yes	8.0 Yes	0.0 No	0.0	1	46
2432	3/29/2016 Wilkinson District 1	Yes	No	No	No	Yes	None	Concrete	South	No	24.0	2.0	0.0	95.0	60.0	55.0	72.0	4.0 No	0.0 N/A	0.0 No	0.0	1	46
2494	4/5/2016 Eric survey	Yes	No	No	No	Yes	None	Concrete	South	No	29.5	2.0	0.0	76.0	76.0	60.0	199.0	6.6 Yes	9.0 Yes	0.0 No	0.0	1	46
2510	4/6/2016 Eric survey	Yes	No	No	No	Yes	Temporary	Concrete	North	No	44.0	2.0	0.0	24.0	82.0	61.0	199.0	6.8 Yes	18.0 Yes	0.0 No	0.0	1	46
2513	4/6/2016 Eric survey	Yes	No	No	No	Yes	None	Concrete	East	No	42.0	2.0	0.0	22.0	76.0	53.0	199.0	3.0 Yes	16.0 Yes	0.0 No	0.0	1	46
2514	4/6/2016 Eric survey	Yes	No	No	No	Yes	None	Unpaved	West	Yes	38.0	2.0	0.0	95.0	28.0	45.0	60.0	7.1 Yes	10.0 No	0.0 No	0.0	1	46

2524	4/6/2016	Eric survey	Yes	No	Yes	No	Yes	None	Concrete	South	Yes	45.0	2.0	0.0	6.0	76.0	57.0	64.0	2.5 Yes	12.0 No	0.0 No	0.0	1	46
2577	4/8/2016	Eric survey	Yes	No	No	No	Yes	None	Asphalt	East	No	35.0	2.0	0.0	135.0	70.0	53.0	199.0	3.2 Yes	8.0 Yes	0.0 No	0.0	1	46
2578	4/8/2016	Eric survey	Yes	No	No	No	Yes	None	Asphalt	North	Yes	34.0	2.0	0.0	72.0	70.0	56.0	199.0	7.2 Yes	10.0 No	0.0 No	0.0	1	46
3608	4/14/2016	Eric survey	Yes	Yes	Yes	Yes	Yes	None	Concrete	North	Yes	37.0	2.0	0.0	120.0	60.0	69.0	182.0	3.9 No	0.0 N/A	0.0 No	0.0	1	46
3628	4/15/2016	Eric survey	Yes	No	No	No	Yes	None	Asphalt	South	No	44.0	2.0	0.0	44.0	73.0	54.0	199.0	6.7 Yes	18.0 No	0.0 No	0.0	1	46
3630	4/15/2016	Eric survey	Yes	No	No	No	Yes	None	Asphalt	North	No	42.0	2.0	0.0	16.0	98.0	62.0	199.0	5.8 Yes	26.0 Yes	0.0 No	0.0	1	46
8	2/2/2016	N30DFS	Yes	No	No	No	Yes	None	Asphalt	West	No	32.0	2.0	34.0	0.0	75.0	60.0	199.0	4.0 No	0.0 N/A	0.0 No	0.0	1	45
9	2/2/2016	N30DFS	Yes	No	No	No	Yes	None	Concrete	East	No	34.5	2.0	37.0	0.0	64.0	60.0	199.0	3.0 No	0.0 N/A	0.0 No	0.0	1	45
10	2/2/2016	N30DFS	Yes	No	No	No	Yes	None	Asphalt	West	No	34.0	2.0	34.0	0.0	54.0	199.0	199.0	6.0 No	0.0 N/A	0.0 No	0.0	1	45
11	2/2/2016	N30DFS	Yes	No	No	No	Yes	None	Asphalt	East	Yes	34.0	2.0	37.0	0.0	53.0	53.0	199.0	12.0 No	0.0 N/A	0.0 No	0.0	1	47
1089	2/29/2016	N30DFS	Yes	No	No	No	Yes	None	Concrete	North	No	29.0	2.0	32.0	20.0	72.0	72.0	199.0	3.0 No	0.0 N/A	0.0 No	0.0	1	45
1092	2/29/2016	N30DFS	Yes	No	No	No	Yes	None	Concrete	North	No	31.0	2.0	35.0	0.0	72.0	54.0	199.0	5.0 No	0.0 N/A	0.0 No	0.0	1	45
1093	2/29/2016	N30DFS	Yes	No	No	No	Yes	None	Concrete	East	No	39.0	2.0	41.0	12.0	72.0	57.0	199.0	4.0 No	0.0 N/A	0.0 No	0.0	1	45
1097	2/29/2016	N30DFS	Yes	No	No	No	Yes	None	Concrete	North	No	34.0	2.0	40.0	0.0	84.0	60.0	199.0	3.0 No	0.0 N/A	0.0 No	0.0	1	45
1140	3/8/2016	N30DFS	Yes	No	No	No	No	None	Concrete	East	Yes	32.0	2.0	28.0	12.0	108.0	107.0	57.0	4.0 No	0.0 N/A	0.0 No	0.0	1	45
1144	3/8/2016	N30DFS	Yes	No	No	No	Yes	None	Concrete	West	No	31.0	2.0	40.0	40.0	120.0	101.0	80.0	3.0 No	0.0 N/A	0.0 No	0.0	1	45
1163	3/9/2016	N30DFS	Yes	No	No	No	Yes	None	Concrete	North	No	37.0	2.0	30.0	0.0	72.0	34.0	199.0	4.0 No	0.0 N/A	0.0 No	0.0	1	45
1166	3/9/2016	N30DFS	Yes	No	No	No	Yes	None	Concrete	South	No	40.0	2.0	40.0	0.0	52.0	72.0	199.0	4.0 No	0.0 N/A	0.0 No	0.0	1	45
1178	3/9/2016	Nichols district 1	Yes	No	Yes	No	Yes	Temporary	Brick	East	No	44.0	2.0	0.0	119.0	31.0	50.0	80.0	3.0 No	0.0 N/A	0.0 No	0.0	1	45
2196	3/14/2016	N30DFS	No	No	No	No	Yes	None	Asphalt	South	No	38.5	2.0	43.0	52.0	61.0	48.0	56.0	5.0 No	0.0 N/A	0.0 No	0.0	1	45
2199	3/14/2016	N30DFS	Yes	No	No	No	Yes	None	Asphalt	East	No	39.0	2.0	43.5	48.0	92.0	67.0	92.0	13.0 No	0.0 N/A	0.0 No	0.0	1	47
2203	3/14/2016	N30DFS	Yes	No	No	No	Yes	None	Concrete	East	No	32.5	2.0	32.5	39.0	67.0	90.0	199.0	4.0 No	0.0 N/A	0.0 No	0.0	1	45
2208	3/14/2016	Nichols district 1	Yes	No	No	No	Yes	Temporary	Concrete	South	Yes	32.5	2.0	0.0	106.0	90.0	85.0	82.0	2.0 Yes	27.0 Yes	0.0 No	0.0	1	44
2211	3/15/2016	Ben dot	Yes	No	No	No	Yes	None	Asphalt	West	Yes	38.0	2.0	31.0	12.0	129.0	53.0	199.0	3.0 Yes	0.0 Yes	0.0 No	0.0	1	45
2215	3/15/2016	Wesdot	Yes	No	No	No	Yes	None	Concrete	East	Yes	32.0	2.0	32.0	30.0	72.0	56.0	199.0	9.0 Yes	0.0 Yes	0.0 No	0.0	1	47
2240	3/16/2016	N30DFS	Yes	No	No	No	Yes	None	Concrete	East	No	26.5	2.0	32.5	0.0	59.0	59.0	72.0	8.0 Yes	6.0 No	0.0 No	0.0	1	39
2261	3/17/2016	Ben dot	Yes	No	No	No	Yes	None	Asphalt	West	No	39.0	2.0	34.0	0.0	75.0	53.0	199.0	6.0 Yes	0.0 Yes	0.0 No	0.0	1	45
2262	3/17/2016	Ben dot	Yes	No	No	No	Yes	None	Asphalt	North	No	37.0	2.0	31.0	0.0	86.0	56.0	199.0	4.0 Yes	0.0 Yes	0.0 No	0.0	1	45
2276	3/17/2016	Nichols district 1	Yes	No	No	No	Yes	None	Asphalt	East	No	46.5	2.0	0.0	101.0	71.0	66.0	199.0	9.0 No	0.0 No	0.0 No	0.0	1	47
2280	3/18/2016	Wesdot	Yes	No	No	No	No	None	Concrete	South	No	33.0	2.0	33.0	0.0	76.0	54.0	199.0	4.0 No	0.0 N/A	0.0 No	0.0	1	45
2284	3/18/2016	Wesdot	Yes	No	Yes	No	Yes	None	Asphalt	East	No	41.0	2.0	38.0	0.0	112.0	112.0	199.0	4.0 No	0.0 No	0.0 No	0.0	1	45
2286	3/18/2016	Wesdot	Yes	No	Yes	No	Yes	None	Asphalt	East	No	41.0	2.0	34.0	0.0	80.0	67.0	199.0	5.0 Yes	0.0 No	0.0 No	0.0	1	45
2289	3/18/2016	Wesdot	Yes	No	Yes	No	Yes	Temporary	Asphalt	West	No	41.0	2.0	41.0	0.0	84.0	64.0	199.0	5.0 Yes	0.0 Yes	0.0 No	0.0	1	45
2306	3/22/2016	Wesdot	Yes	No	No	No	Yes	None	Asphalt	West	No	41.0	0.1	36.0	0.0	72.0	68.0	199.0	0.0 No	0.0 N/A	0.0 No	0.0	1	44
2312	3/22/2016	N30DFS	Yes	No	No	No	Yes	None	Concrete	North	Yes	40.0	2.0	45.0	26.0	104.0	97.0	80.0	4.0 Yes	7.0 Yes	0.0 No	0.0	1	45
2314	3/22/2016	N30DFS	Yes	No	No	No	Yes	Temporary	Concrete	South	No	40.0	2.0	37.5	0.0	64.0	56.0	64.0	4.0 No	0.0 N/A	0.0 No	0.0	1	45
2317	3/22/2016	N30DFS	Yes	No	No	No	Yes	None	Concrete	South	No	28.5	2.0	31.0	33.0	77.0	70.0	62.0	8.0 No	0.0 N/A	0.0 No	0.0	1	39
2338	3/22/2016	N30DFS	Yes	No	No	No	No	None	Concrete	South	Yes	34.5	2.0	42.0	0.0	60.0	54.0	199.0	14.0 Yes	3.0 Yes	0.0 No	0.0	1	47
2340	3/22/2016	N30DFS	Yes	No	No	No	Yes	None	Asphalt	North	Yes	37.0	2.0	37.0	10.0	114.0	54.0	199.0	3.0 Yes	10.0 Yes	0.0 No	0.0	1	45
2345	3/22/2016	N30DFS	Yes	No	No	No	Yes	None	Asphalt	East	No	41.0	2.0	45.0	36.0	49.0	40.0	199.0	2.0 Yes	9.0 No	9.0 No	0.0	1	44
2349	3/23/2016	Wesdot	Yes	No	No	No	Yes	None	Concrete	South	Yes	35.0	2.0	31.0	0.0	93.0	58.0	199.0	6.0 Yes	0.0 Yes	0.0 No	0.0	1	45
2359	3/23/2016	Nichols district 1	No	No	No	No	Yes	None	Asphalt	East	Yes	41.0	2.0	0.0	130.0	75.0	120.0	40.0	1.5 No	0.0 N/A	0.0 No	0.0	1	44
2360	3/23/2016	Wesdot	Yes	No	No	No	Yes	None	Concrete	East	No	41.0	2.0	37.0	12.0	72.0	44.0	199.0	6.0 Yes	0.0 No	0.0 No	0.0	1	45
2361	3/23/2016	Wesdot	Yes	No	No	No	Yes	None	Concrete	West	No	41.0	2.0	31.0	50.0	80.0	65.0	199.0	4.0 No	0.0 No	0.0 No	0.0	1	45
2370	3/23/2016	Wesdot	Yes	No	No	No	Yes	None	Concrete	East	No	35.0	2.0	28.0	40.0	96.0	72.0	199.0	10.0 No	0.0 No	0.0 No	0.0	1	47
2383	3/24/2016	Wesdot	Yes	No	No	No	Yes	None	Asphalt	West	No	37.0	2.0	31.0	0.0	160.0	58.0	199.0	8.0 No	0.0 No	0.0 No	0.0	1	39
2385	3/24/2016	Wesdot	Yes	No	No	Yes	Yes	None	Asphalt	West	Yes	39.0	2.0	39.0	0.0	87.0	53.0	199.0	14.0 Yes	0.0 N/A	0.0 No	0.0	1	47
2391	3/24/2016	Wesdot	Yes	No	No	No	Yes	None	Asphalt	West	No	41.0	2.0	36.0	0.0	88.0	57.0	199.0	6.0 No	0.0 N/A	0.0 No	0.0	1	45
2398	3/24/2016	Wesdot	Yes	No	No	No	Yes	None	Concrete	West	No	29.0	2.0	29.0	0.0	72.0	58.0	199.0	8.0 Yes	0.0 No	0.0 No	0.0	1	39
2407	3/24/2016	Wesdot	Yes	No	No	No	Yes	None	Concrete	South	Yes	38.0	2.0	28.0	48.0	105.0	60.0	199.0	6.0 No	0.0 No	0.0 No	0.0	1	45
2422	3/28/2016	Wesdot	Yes	No	No	No	Yes	None	Concrete	South	No	34.0	2.0	36.0	12.0	78.0	60.0	199.0	6.0 No	0.0 N/A	0.0 No	0.0	1	45
2426	3/28/2016	Wesdot	Yes	No	Yes	No	Yes	None	Concrete	South	No	34.0	2.0	36.0	12.0	75.0	60.0	199.0	6.0 No	0.0 N/A	0.0 No	0.0	1	45
2450	3/31/2016	Wesdot	Yes	No	No	No	Yes	None	Unpaved	East	No	38.0	2.0	38.0	16.0	80.0	48.0	199.0	6.0 No	0.0 N/A	0.0 No	0.0	1	45
2451	3/31/2016	Wesdot	Yes	No	No	No	Yes	None	Unpaved	East	No	35.0	2.0	35.0	16.0	80.0	90.0	199.0	4.0 No	0.0 N/A	0.0 No	0.0	1	45
2452	4/1/2016	Wesdot	Yes	No	Yes	No	Yes	None	Concrete	East	No	36.0	2.0	32.0	16.0	92.0	60.0	199.0	4.0 No	0.0 N/A	0.0 No	0.0	1	45
2470	4/5/2016	Wesdot	Yes	No	No	No	Yes	None	Concrete	East	Yes	34.0	2.0	34.0	45.0	74.0	60.0	199.0	9.0 Yes	0.0 N/A	0.0 No	0.0	1	47
2471	4/5/2016	Wesdot	Yes	No	No	No	Yes	None	Concrete	West	Yes	38.0	2.0	28.0	65.0	66.0	60.0	199.0	5.0 No	0.0 N/A	0.0 Yes	264.0	1	45
2478	4/5/2016	Wesdot	Yes	No	No	No	Yes	None	Asphalt	South	No	37.0	2.0	37.0	0.0	80.0	60.0	199.0	4.0 No	0.0 N/A	0.0 No	0.0	1	45
2479	4/5/2016	Wesdot	Yes	No	No	No	Yes	None	Asphalt	West	No	40.0	2.0	40.0	0.0	52.0	60.0	199.0	4.0 No	0.0 N/A	0.0 No	0.0	1	45
2480	4/5/2016	Wesdot	Yes	No	No	No	Yes	None	Asphalt	North	No	40.0	2.0	37.0	12.0	72.0	54.0	199.0	8.0 Yes	0.0 N/A	0.0 No	0.0	1	39
2486	4/5/2016	Wesdot	Yes	No	No	No	Yes	None	Asphalt	North	Yes	40.0	2.0	40.0	24.0	60.0	50.0	199.0	4.0 No	0.0 N/A	0.0 No	0.0	1	45
2496	4/6/2016	Wesdot	Yes	No	No	No	Yes	None	Unpaved	South	Yes	38.0	2.0	32.0	32.0	100.0	60.0	199.0	4.0 No	0.0 N/A	0.0 No	0.0	1	45
2502	4/6/2016	Wesdot	Yes	No	No	No	Yes	None	Unpaved	South	No	40.0	2.0	34.0	0.0	110.0	60.0	60.0	25.0 No	0.0 No	0.0 No	0.0	1	47
2507	4/6/2016	Eric survey	Yes	No	No	No	Yes	None	Asphalt	South	Yes	47.0	2.0	0.0	90.0	81.0	74.0	199.0	13.0 Yes	6.0 Yes	0.0 No	0.0	1	47
2508	4/6/2016	Eric survey	Yes	No	No	No	Yes	None	Asphalt	East	No	50.0	2.0	0.0	99.0	70.0	53.0	199.0	12.2 Yes	6.0 Yes	0.0 No	0.0	1	47
2521	4/6/2016	Eric survey	Yes	No	No	No	Yes	None	Unpaved	West	No	44.0	2.0	0.0	12.0	36.0	0.0	0.0	0.0 No	0.0 N/A	0.0 No	0.0	1	44
2538	4/7/2016	Ben dot	Yes	No	No	No	Yes	None	Asphalt	West	No	40.0	2.0	39.0	12.0	77.0	52.0	199.0	8.0 No	0.0 N/A	0.0 No	0.0	1	39
2544	4/7/2016	Ben dot	Yes	No	No	No	Yes	None	Asphalt	East	Yes	39.0	2.0	36.0	48.0	48.0	122.0	199.0	4.0 No	0.0 N/A	0.0 No	0.0	1	45
3606	4/14/2016	Eric survey	Yes	Yes	Yes	Yes	Yes	None	Asphalt	West	Yes	36.0	2.0	0.0	87.0	90.0	63.0	182.0	0.9 Yes	22.0 Yes	0.0 Yes	9.0	1	44
3607	4/14/2016	Eric survey	Yes	Yes	Yes	Yes	Yes	None	Asphalt	South	Yes	36.0	2.0	0.0	96.0	57.0	64.0	178.0	1.1 Yes	16.0 Yes	0.0 Yes	9.0	1	44
3647	4/15/2016	Eric survey	Yes	No	No	No	Yes	None	Asphalt	West	No	39.0	2.0	0.0	159.0	96.0	60.0	199.0	1.7 Yes	32.0 Yes	0.0 No	0.0	1	44
4637	4/19/2016	Wesdot	Yes	No	Yes	No	Yes	None	Asphalt	South	Yes	38.0	2.0	38.0	42.0	77.0	58.0	199.0	3.0 No	0.0 N/A	0.0 No	0.0	1	45
4640	4/19/2016	Wesdot	Yes	No	No	No	Yes	None	Asphalt	West	Yes	38.0	2.0	32.0	0.0	120.0	58.0	128.0	4.0 Yes	0.0 Yes	0.0 No	0.0	1	45
4643	4/19/2016	Wesdot	Yes	No	Yes	No	Yes	None	Asphalt	North	No	36.0	2.0	30.0	0.0	115.0	80.0	199.0	5.0 No	0.0 Yes	0.0 No	0.0	1	45
4648	4/25/2016	Wesdot	Yes	No	No	No	Yes	None	Asphalt	West	No	39.0	2.0	33.0	30.0	130.0	65.0	199.0	6.0 Yes	0.0 Yes	0.0 No	0.0	1	45
4650	4/25/2016	Wesdot	Yes	No	No	No	Yes	None	Concrete	East	No	35.0	2.0	30.0	86.0	120.0	58.0	199.0	3.0 Yes	0.0 Yes	0.0 Yes	168.0	1	45
4652	4/27/2016	Wesdot	Yes	No	No	No	Yes	None	Concrete	North	No	35.0	2.0	27.0	0.0	125.0	65.0	199.0	20.0 No	0.0 N/A	0.0 No	0.0	1	47
4653	4/27/2016	Wesdot	Yes	No	No	No	Yes	None	Asphalt	East	No	36.0	2.0	29.0	42.0	120.0	65.0	199.0	4.0 No	0.0 N/A	0.0 No	0.0	1	45
4654	4/27/2016	Wesdot	Yes	No	No	No	Yes	None	Asphalt	South	No	28.0	2.0	28.0	45.0	75.0	65.0	199.0	18.0 No	0.0 N/A	0.0 No	0.0	1	47
4655	4/27/2016	Wesdot	Yes	No	No	No	Yes	None	Concrete	West	No	36.0	2.0	31.0	0.0	125.0	72.0	199.0	10.0 No	0.0 N/A	0.0 No	0.0	1	47
4662	4/28/2016	Wesdot	Yes	No	No	No	Yes	None	Asphalt	South	No	38.0	2.0	38.0	0.0	84.0	64.0	199.0	4.0 No	0.0 N/A	0.0 No	0.0	1	45
4668	4/29/2016	Ben dot	Yes	No	No	No	Yes	None	Asphalt	East	Yes	41.0	2.0	39.0	30.0	100.0	60.0	199.0	4.0 Yes	0.0 Yes	0.0 No	0.0	1	45
4669	4/29/2016	Ben dot	Yes	No	No	No	Yes	None	Asphalt	West	Yes	40.0	2.0	37.0	0.0	64.0	60.0	199.0	4.0 Yes	0.0 Yes	0.0 No	0.0	1	45
4670	4/29/2016	Ben dot	Yes	No	No	No	Yes	None	Asphalt	West	Yes	40.0	2.0	37.0	0.0	64.0	60.0	199.0	4.0 Yes	0.0 Yes	0.0 No	0.0	1	45
4677	4/29/2016	Wesdot	Yes	Yes	No	No	Yes	None	Concrete	West	Yes	41.0	2.0	37.0	12.0	80.0	55.0	199.0	3.0 Yes	0.0 Yes	0.0 No	0.0	1	45
4685	4/29/2016	Wesdot	Yes	No	No	No	Yes	None	Concrete	West	Yes	33.0	2.0	33.0	40.0	88.0	60.0	199.0	4.0 Yes	0.0 Yes	0.0 No	0.0	1	45
7	2/2/2016	N30DFS	Yes	No	No	No	Yes	None	Asphalt	North	Yes	38.0	2.0	34.5	0.0	16.0	0.0	199.0	1.0 Yes	0.0 N/A	0.0 No	0.0	1	43
1095	2/29/2016	N30DFS	Yes	No	No	No	Yes	None	Concrete	West	Yes	31.0	2.0	31.0	12.0	40.0	199.0	199.0	2.0 Yes	12.0 N/A	0.0 No	0.0	1	43
1101	2/29/2016	N30DFS	Yes	No	No	No	Yes	None	Asphalt	East	Yes	47.0	2.0	47.0	24.0	68.0	68.0	77.0	11.0 No	0.0 N/A	0.0 No	0.0	1	46
1125	3/8/2016	Ben & wes	Yes	No	No	No	Yes	None	Asphalt	North	No	46.0	2.0	41.0	0.0	144.0	80.0	140.0	8.0 No	0.0 N/A	0.0 No	0.0	1	38
1127	3/8/2016	Ben dot	Yes	No	No	No	Yes	None	Asphalt	South	No	45.0	2.0	41.0	12.0	115.0	60.0	115.0	6.0 No	0.0 N/A	0.0 No	0.0	1	44
1128	3/8/2016	Ben dot	Yes	No	No	No	Yes	None	Asphalt	West	No	44.0	2.0	44.0	24.0	192.0	60.0	192.0	6.0 No	0.0 N/A	0.0 No	0.0	1	44
1129	3/8/2016	Ben dot	Yes	No	Yes	No	Yes	None	Concrete	West	No	46.0	2.0	36.0	0.0	55.0	38.0	199.0	6.0 No	0.0 N/A	0.0 No	0.0	1	44
1130	3/8/2016	Ben dot	Yes	No	Yes	No	Yes	None	Concrete	South	No	45.0	2.0	37.0	46.0	88.0	84.0	199.0	6.0 No	0.0 N/A	0.0 No	0.0	1	44
1132	3/8/2016	Ben dot	Yes	No	Yes	No	Yes	None	Concrete	North	No	45.0	2.0	45.0	48.0	67.0	62.0	199.0	8.0 No	0.0 N/A	0.0 No	0.0	1	38
1133	3/8/2016	Ben dot	Yes	No	Yes	No	Yes	None	Concrete	East	No	42.0	2.0	37.0	12.0	148.0	84.0	199.0	8.0 No	0.0 N/A	0.0 No	0.0	1	38
1164	3/9/2016	N30DFS	Yes	No	No	No	Yes	None	Concrete	East	No	51.0	2.0	34.0	0.0	60.0	60.0	199.0	3.0 Yes	6.0 No	0.0 No	0.0	1	44
1168	3/9/2016	N30DFS	Yes	No	No	No	Yes	Permanent	Concrete	North	No	32.0	2.0	32.0	32.0	75.0	199.0	66.0	2.0 Yes	11.0 No	0.0 No	0.0	1	43
2212	3/15/2016	Ben dot	Yes	No	No	No	Yes	None	Concrete	East	Yes	35.0	2.0	35.0	0.0	127.0	59.0	199.0	2.0 Yes	27.0 No	0.0 No	0.0	1	43
2222	3/16/2016	Wesdot	Yes	No	No	No	Yes	None	Concrete	East	No	46.0	2.0	39.0	18.0	50.0	58.0	199.0	15.0 No	0.0 Yes	0.0 No	0.0	1	46
2243	3/16/2016	N30DFS	Yes	No	No	No	Yes	None	Concrete	West	Yes	37.0	2.0	41.5	7.0	78.0	60.0	199.0	2.0 Yes	18.0 No	0.0 No	0.0	1	43
2247	3/16/2016	N30DFS	Yes	No	No	No	Yes	Permanent	Concrete	West	Yes	38.0	2.0	45.0	13.0	79.0	60.0	199.0	8.0 Yes	19.0 No	0.0 No	0.0	1	43
2253	3/16/2016	N30DFS	Yes	No	No	No	Yes	None	Concrete	West	No	33.5	2.0	46.0	52.0	90.0	60.0	0.0	2.0 No	0.0 N/A	0.0 No	0.0	1	43
2269	3/16/2016	Wilkinson District 1	Yes	No	No	No	Yes	None	Asphalt	East	Yes	45.0	2.0	0.0	70.0	60.0	120.0	48.0	2.0 Yes	1.0 No	0.0 No	0.0	1	43
2307	3/22/2016	Wesdot	Yes	No	No	No	Yes	None	Asphalt	East	No	42.0	0.1	38.0	0.0	79.0	70.0	199.0	0.0 No	0.0 N/A	0.0 No	0.0	1	43
2309	3/22/2016	N30DFS	Yes	No	No	No	Yes	None	Concrete	East	No	24.5	2.0	31.0	48.0	92.0	60.0	36.0	0.0 No	0.0 N/A	0.0 No	0.0	1	43
2318	3/22/2016	N30DFS	Yes	No	No	No	Yes	Temporary	Asphalt	South	Yes	33.0	2.0	34.0	0.0	84.0	54.0	199.0	2.0 Yes	30.0 Yes	0.0 No	0.0	1	43

2386	3/24/2016	Wesdot	Yes	No	No	Yes	Yes	None	Asphalt	North	No	42.0	2.0	35.0	48.0	77.0	48.0	199.0	8.0 No	0.0 N/A	0.0 No	0.0	1	38
2387	3/24/2016	Wesdot	Yes	No	No	Yes	Yes	None	Asphalt	West	Yes	43.0	2.0	38.0	0.0	84.0	60.0	199.0	8.0 No	0.0 N/A	0.0 No	0.0	1	38
2392	3/24/2016	Wesdot	Yes	No	No	No	Yes	None	Asphalt	East	No	42.0	2.0	38.0	0.0	100.0	53.0	199.0	4.0 No	0.0 N/A	0.0 No	0.0	1	44
2393	3/24/2016	Wesdot	Yes	No	No	No	Yes	None	Asphalt	West	No	48.0	2.0	39.0	0.0	108.0	60.0	199.0	8.0 No	0.0 N/A	0.0 No	0.0	1	38
2395	3/24/2016	Wesdot	Yes	No	No	No	Yes	None	Asphalt	West	No	44.0	2.0	34.0	0.0	72.0	55.0	199.0	4.0 No	0.0 N/A	0.0 No	0.0	1	44
2481	4/5/2016	Wesdot	Yes	No	No	No	Yes	None	Asphalt	North	No	43.0	2.0	37.0	0.0	72.0	54.0	199.0	9.0 No	0.0 N/A	0.0 No	0.0	1	46
2517	4/6/2016	Wesdot	Yes	No	No	No	Yes	None	Brick	East	Yes	50.0	2.0	39.0	0.0	57.0	60.0	199.0	12.0 No	0.0 N/A	0.0 No	0.0	1	46
2532	4/7/2016	Ben dot	Yes	No	No	No	Yes	None	Asphalt	West	No	43.0	2.0	41.0	0.0	121.0	72.0	199.0	3.0 Yes	0.0 Yes	0.0 No	0.0	1	44
2533	4/7/2016	Ben dot	Yes	No	No	No	Yes	None	Concrete	North	Yes	43.0	2.0	42.0	0.0	80.0	72.0	180.0	3.0 Yes	0.0 Yes	0.0 No	0.0	1	44
2537	4/7/2016	Ben dot	Yes	No	No	No	Yes	None	Asphalt	East	No	52.0	2.0	40.0	52.0	48.0	48.0	199.0	6.0 No	0.0 N/A	0.0 No	0.0	1	44
2539	4/7/2016	Ben dot	Yes	No	No	No	Yes	None	Asphalt	West	No	44.0	2.0	43.0	44.0	52.0	55.0	199.0	4.0 No	0.0 N/A	0.0 No	0.0	1	44
2540	4/7/2016	Ben dot	Yes	No	No	No	Yes	None	Asphalt	East	No	46.0	2.0	46.0	22.0	85.0	60.0	199.0	4.0 No	0.0 N/A	0.0 No	0.0	1	44
2545	4/7/2016	Eric survey	Yes	No	Yes	Yes	Yes	None	Concrete	South	No	38.0	2.0	0.0	24.0	79.0	61.0	199.0	2.2 Yes	14.0 Yes	0.0 Yes	223.0	1	44
2547	4/7/2016	Eric survey	Yes	No	Yes	Yes	Yes	None	Concrete	West	Yes	36.0	2.0	0.0	12.0	75.0	60.0	199.0	4.5 Yes	12.0 Yes	0.0 Yes	223.0	1	44
2590	4/13/2016	Eric survey	Yes	No	No	No	Yes	None	Concrete	South	No	40.0	2.0	0.0	24.0	110.0	56.0	199.0	2.2 Yes	51.0 Yes	0.0 Yes	158.0	1	44
2591	4/13/2016	Eric survey	Yes	No	No	No	Yes	None	Concrete	West	No	39.0	2.0	0.0	8.0	98.0	52.0	199.0	5.8 Yes	47.0 Yes	0.0 Yes	158.0	1	44
2596	4/13/2016	Eric survey	Yes	Yes	Yes	Yes	Yes	None	Concrete	South	Yes	36.0	2.0	0.0	12.0	80.0	60.0	199.0	2.6 Yes	15.0 Yes	0.0 Yes	92.0	1	44
2603	4/13/2016	Eric survey	Yes	No	No	No	Yes	None	Concrete	North	No	37.0	2.0	0.0	8.0	77.0	60.0	199.0	3.6 Yes	12.0 Yes	0.0 Yes	630.0	1	44
3618	4/14/2016	Eric survey	Yes	No	No	No	Yes	None	Concrete	East	Yes	38.0	2.0	0.0	12.0	84.0	56.0	156.0	9.3 Yes	20.0 Yes	0.0 Yes	183.0	1	46
3638	4/15/2016	Eric survey	Yes	No	No	No	Yes	None	Asphalt	West	No	34.0	2.0	0.0	20.0	84.0	52.0	199.0	12.4 Yes	22.0 Yes	0.0 Yes	235.0	1	46
3640	4/15/2016	Eric survey	Yes	No	No	No	Yes	None	Asphalt	North	No	38.0	2.0	0.0	48.0	82.0	54.0	199.0	7.1 Yes	18.0 Yes	0.0 Yes	343.0	1	44
3641	4/15/2016	Eric survey	Yes	No	No	No	Yes	None	Concrete	East	No	36.0	2.0	0.0	0.0	75.0	56.0	58.0	3.8 Yes	14.0 Yes	0.0 Yes	343.0	1	44
4636	4/19/2016	Wesdot	Yes	No	Yes	No	Yes	None	Asphalt	West	No	43.0	2.0	37.0	20.0	62.0	54.0	199.0	4.0 Yes	0.0 Yes	0.0 No	0.0	1	44
4639	4/19/2016	Wesdot	Yes	No	No	No	Yes	None	Asphalt	East	Yes	38.0	2.0	34.0	54.0	172.0	58.0	48.0	2.0 No	0.0 N/A	0.0 No	0.0	1	43
4651	4/25/2016	Wesdot	Yes	No	No	No	Yes	None	Unpaved	West	Yes	40.0	2.0	36.0	60.0	70.0	72.0	48.0	2.0 Yes	0.0 Yes	0.0 No	0.0	1	43
4659	4/28/2016	Ben dot	Yes	No	No	No	Yes	None	Unpaved	East	No	29.0	2.0	29.0	0.0	120.0	60.0	48.0	0.0 No	0.0 N/A	0.0 No	0.0	1	43
4661	4/28/2016	Wesdot	Yes	No	No	No	Yes	None	Unpaved	North	No	40.0	2.0	39.0	0.0	50.0	60.0	48.0	0.0 No	0.0 N/A	0.0 No	0.0	1	43
4672	4/29/2016	Wesdot	Yes	No	No	No	Yes	None	Asphalt	West	No	43.0	2.0	39.0	0.0	93.0	50.0	80.0	5.0 No	0.0 No	0.0 No	0.0	1	44
4673	4/29/2016	Wesdot	Yes	No	No	No	Yes	None	Asphalt	West	No	43.0	2.0	39.0	12.0	80.0	59.0	199.0	3.0 Yes	0.0 No	0.0 No	0.0	1	44
4678	4/29/2016	Wesdot	Yes	Yes	No	No	Yes	None	Concrete	West	Yes	42.0	2.0	37.0	0.0	111.0	70.0	199.0	3.0 Yes	0.0 Yes	0.0 No	0.0	1	44
1087	2/29/2016	N30DFS	Yes	No	No	No	Yes	None	Asphalt	East	No	31.0	2.0	36.0	128.0	68.0	60.0	199.0	2.0 No	0.0 N/A	0.0 No	0.0	1	42
1113	3/7/2016	Melendy dist 1	Yes	No	Yes	No	Yes	Permanent	Asphalt	South	No	38.0	2.0	0.0	0.0	70.0	55.0	88.0	5.0 Yes	6.0 Yes	0.0 No	0.0	1	43
1114	3/7/2016	Melendy dist 1	Yes	No	No	No	Yes	Permanent	Asphalt	North	No	33.0	2.0	0.0	0.0	64.0	52.0	90.0	6.0 Yes	6.0 Yes	0.0 No	0.0	1	43
1139	3/8/2016	N30DFS	Yes	No	No	No	No	None	Concrete	South	No	32.0	2.0	19.0	53.0	82.0	108.0	199.0	6.0 No	0.0 N/A	0.0 No	0.0	1	43
1143	3/8/2016	N30DFS	Yes	No	No	No	Yes	None	Concrete	West	No	31.0	2.0	20.0	20.0	120.0	101.0	80.0	3.0 No	0.0 N/A	0.0 No	0.0	1	43
1149	3/8/2016	N30DFS	Yes	No	No	No	Yes	None	Concrete	North	Yes	33.0	2.0	17.5	82.0	35.0	60.0	199.0	4.0 No	0.0 N/A	0.0 Yes	624.0	1	43
1150	3/8/2016	N30DFS	Yes	No	No	No	Yes	None	Concrete	North	No	33.0	2.0	26.5	0.0	102.0	101.0	199.0	3.0 No	0.0 N/A	0.0 No	0.0	1	43
1159	3/8/2016	Nichols district 1	Yes	No	Yes	No	Yes	Temporary	Concrete	North	No	39.0	2.0	0.0	60.0	96.0	60.0	96.0	4.0 No	0.0 N/A	0.0 No	0.0	1	43
1196	3/10/2016	Nichols district 1	Yes	No	Yes	No	Yes	None	Concrete	North	Yes	37.5	2.0	0.0	56.0	96.0	96.0	154.0	2.5 Yes	9.0 No	0.0 No	0.0	1	43
1197	3/10/2016	Nichols district 1	Yes	Yes	Yes	Yes	Yes	None	Concrete	South	No	36.0	2.3	0.0	0.0	82.0	82.0	70.0	3.0 No	0.0 N/A	0.0 No	0.0	1	43
2191	3/14/2016	N30DFS	Yes	No	No	No	Yes	None	Asphalt	North	Yes	35.0	2.0	40.0	134.0	68.0	58.0	199.0	2.0 Yes	10.0 Yes	0.0 No	0.0	1	42
2209	3/14/2016	Nichols district 1	No	No	Yes	No	Yes	None	Concrete	East	Yes	36.0	2.0	0.0	0.0	83.0	78.0	118.0	4.0 Yes	7.0 Yes	0.0 No	0.0	1	43
2257	3/16/2016	Nichols district 1	Yes	No	Yes	No	Yes	None	Asphalt	East	No	37.0	2.0	0.0	50.0	122.0	117.0	162.0	7.0 No	0.0 N/A	0.0 No	0.0	1	43
2259	3/16/2016	Nichols district 1	Yes	No	Yes	No	Yes	None	Asphalt	East	No	40.5	2.0	0.0	0.0	68.0	62.0	62.0	6.5 No	0.0 N/A	0.0 No	0.0	1	43
2263	3/17/2016	Ben dot	Yes	No	No	No	Yes	Permanent	Asphalt	East	No	35.0	2.0	23.0	46.0	86.0	59.0	199.0	3.0 Yes	0.0 Yes	0.0 No	0.0	1	43
2265	3/16/2016	Wilkinson District 1	Yes	No	No	No	Yes	None	Asphalt	East	No	40.0	2.0	0.0	10.0	94.0	80.0	108.0	5.0 Yes	4.0 Yes	0.0 No	0.0	1	43
2268	3/16/2016	Wilkinson District 1	Yes	No	Yes	No	Yes	Permanent	Asphalt	West	No	33.0	2.0	0.0	0.0	60.0	60.0	84.0	22.0 Yes	1.0 No	0.0 No	0.0	1	45
2285	3/18/2016	Wesdot	Yes	No	Yes	No	Yes	None	Concrete	West	Yes	43.0	2.0	38.0	0.0	60.0	60.0	108.0	0.0 Yes	12.0 No	0.0 No	0.0	1	42
2296	3/21/2016	Wilkinson District 1	Yes	No	No	No	Yes	None	Concrete	South	Yes	41.0	2.0	0.0	0.0	192.0	60.0	72.0	6.0 Yes	3.0 Yes	0.0 No	0.0	1	43
2297	3/21/2016	Wilkinson District 1	Yes	No	No	No	Yes	None	Concrete	West	No	41.0	2.0	0.0	18.0	72.0	60.0	72.0	3.0 Yes	6.0 Yes	0.0 No	0.0	1	43
2302	3/22/2016	Nichols district 1	No	No	Yes	No	Yes	None	Concrete	West	No	37.5	2.0	0.0	0.0	64.0	59.0	88.0	6.5 Yes	8.0 Yes	0.0 No	0.0	1	43
2327	3/22/2016	Nichols district 1	Yes	No	No	No	Yes	None	Asphalt	North	Yes	32.0	2.0	0.0	60.0	116.0	62.0	199.0	5.0 No	0.0 N/A	0.0 No	0.0	1	43
2333	3/22/2016	Wilkinson District 1	Yes	No	No	No	Yes	None	Asphalt	East	No	38.0	2.0	0.0	0.0	108.0	60.0	72.0	3.0 Yes	6.0 Yes	0.0 No	0.0	1	43
2334	3/22/2016	Wilkinson District 1	Yes	No	No	No	Yes	None	Other	West	No	33.0	2.0	0.0	0.0	135.0	60.0	72.0	6.0 Yes	6.0 Yes	0.0 No	0.0	1	43
2335	3/22/2016	Wilkinson District 1	Yes	No	No	No	Yes	Temporary	Other	East	No	32.0	2.0	0.0	0.0	125.0	32.0	72.0	13.0 Yes	5.0 Yes	0.0 No	0.0	1	45
2336	3/22/2016	N30DFS	Yes	No	No	No	Yes	None	Asphalt	North	Yes	34.0	2.0	34.0	120.0	60.0	60.0	199.0	0.0 Yes	0.0 Yes	0.0 No	0.0	1	42
2358	3/23/2016	Nichols district 1	No	No	No	No	Yes	None	Concrete	West	Yes	41.0	2.0	0.0	13.0	54.0	54.0	80.0	5.0 No	0.0 N/A	0.0 No	0.0	1	43
2368	3/23/2016	Wesdot	Yes	No	No	No	Yes	Temporary	Concrete	South	No	29.0	2.0	26.0	0.0	107.0	57.0	199.0	14.0 No	0.0 N/A	0.0 No	0.0	1	45
2373	3/23/2016	Wilkinson District 1	Yes	No	No	No	Yes	None	Asphalt	North	No	39.0	2.0	0.0	15.0	55.0	42.0	72.0	5.0 Yes	6.0 Yes	0.0 No	0.0	1	43
2379	3/23/2016	Nichols district 1	Yes	No	No	No	Yes	None	Concrete	North	No	34.5	2.3	0.0	0.0	70.0	80.0	65.0	10.0 No	0.0 N/A	0.0 No	0.0	1	45
2382	3/24/2016	Wesdot	Yes	No	No	No	Yes	None	Asphalt	East	No	38.0	2.0	31.0	105.0	140.0	62.0	199.0	0.0 Yes	0.0 Yes	0.0 No	0.0	1	42
2413	3/24/2016	Nichols district 1	No	No	No	No	Yes	None	Concrete	South	No	38.0	2.0	0.0	0.0	70.0	65.0	199.0	8.0 Yes	10.0 No	0.0 No	0.0	1	37
2416	3/24/2016	Nichols district 1	No	No	No	No	Yes	None	Concrete	East	No	37.0	2.0	0.0	17.0	80.0	75.0	199.0	8.0 No	0.0 N/A	0.0 No	0.0	1	37
2424	3/28/2016	Wesdot	Yes	No	Yes	No	Yes	None	Concrete	South	No	38.0	2.0	22.0	0.0	84.0	60.0	199.0	3.0 Yes	0.0 N/A	0.0 No	0.0	1	43
2430	3/29/2016	Wilkinson District 1	Yes	No	No	No	Yes	None	Concrete	West	No	36.0	2.0	0.0	0.0	85.0	68.0	63.0	3.0 Yes	7.0 No	0.0 No	0.0	1	43
2431	3/29/2016	Wilkinson District 1	Yes	No	No	No	Yes	None	Concrete	East	No	33.0	2.0	0.0	8.0	85.0	58.0	91.0	4.0 Yes	7.0 Yes	0.0 No	0.0	1	43
2440	3/29/2016	Nichols district 1	Yes	No	No	No	Yes	None	Concrete	West	Yes	41.0	2.0	0.0	0.0	70.0	65.0	199.0	4.0 No	0.0 N/A	0.0 No	0.0	1	43
2441	3/29/2016	Nichols district 1	Yes	No	No	No	Yes	None	Concrete	East	No	32.0	2.3	0.0	0.0	60.0	55.0	199.0	6.5 Yes	8.0 Yes	0.0 No	0.0	1	43
2448	3/31/2016	Wesdot	Yes	No	No	No	Yes	None	Unpaved	East	No	37.0	2.0	36.0	100.0	100.0	60.0	140.0	2.0 No	0.0 N/A	0.0 No	0.0	1	42
2464	4/1/2016	Wesdot	Yes	No	Yes	No	Yes	None	Concrete	East	Yes	32.0	2.0	32.0	100.0	77.0	100.0	199.0	2.0 Yes	0.0 No	0.0 No	0.0	1	42
2466	4/4/2016	Nichols district 1	Yes	No	No	No	Yes	None	Concrete	North	Yes	41.0	2.0	0.0	16.0	103.0	63.0	150.0	8.0 Yes	8.0 No	0.0 No	0.0	1	37
2474	4/5/2016	Eric survey	Yes	No	No	No	Yes	None	Concrete	North	No	39.0	2.0	0.0	36.0	70.0	54.0	199.0	5.3 Yes	8.0 No	0.0 No	0.0	1	43
2491	4/5/2016	Eric survey	Yes	No	No	No	Yes	None	Asphalt	South	No	33.0	2.0	0.0	24.0	198.0	54.0	168.0	12.8 No	0.0 N/A	0.0 No	0.0	1	45
2495	4/5/2016	Eric survey	Yes	No	No	No	Yes	None	Concrete	North	No	36.0	2.0	0.0	12.0	70.0	57.0	199.0	3.3 Yes	5.0 Yes	0.0 No	0.0	1	43
2497	4/6/2016	Wesdot	Yes	No	No	No	Yes	None	Unpaved	North	No	35.0	2.0	33.0	66.0	150.0	60.0	80.0	0.0 No	0.0 N/A	0.0 No	0.0	1	42
2498	4/6/2016	Wesdot	Yes	No	No	No	Yes	None	Unpaved	North	No	35.0	2.0	29.0	90.0	170.0	60.0	96.0	0.0 No	0.0 N/A	0.0 No	0.0	1	42
2501	4/6/2016	Wesdot	Yes	No	No	No	Yes	None	Asphalt	North	Yes	27.0	2.0	27.0	93.0	80.0	60.0	199.0	2.0 Yes	0.0 Yes	0.0 No	0.0	1	42
2505	4/6/2016	Eric survey	Yes	No	No	No	Yes	None	Concrete	West	Yes	33.0	2.0	0.0	32.0	60.0	64.0	199.0	2.8 No	0.0 N/A	0.0 No	0.0	1	43
2516	4/6/2016	Wesdot	Yes	No	No	No	Yes	None	Asphalt	North	No	44.0	2.0	44.0	16.0	108.0	54.0	50.0	0.0 No	0.0 N/A	0.0 No	0.0	1	42
2525	4/6/2016	Eric survey	Yes	No	Yes	No	Yes	None	Concrete	East	Yes	45.0	2.0	0.0	46.0	89.0	59.0	199.0	9.6 Yes	24.0 No	0.0 Yes	137.0	1	45
2526	4/6/2016	Eric survey	Yes	No	Yes	No	Yes	None	Concrete	West	Yes	43.0	2.0	0.0	16.0	70.0	52.0	199.0	2.1 Yes	12.0 No	0.0 Yes	143.0	1	43
2542	4/7/2016	Ben dot	Yes	No	No	No	Yes	None	Asphalt	West	Yes	38.0	2.0	34.0	108.0	88.0	88.0	199.0	2.0 No	0.0 N/A	0.0 No	0.0	1	42
2567	4/8/2016	Eric survey	Yes	No	No	No	Yes	None	Asphalt	North	Yes	36.0	2.0	0.0	70.0	89.0	91.0	199.0	2.2 Yes	10.0 No	0.0 Yes	14.0	1	43
2570	4/8/2016	Eric survey	Yes	No	No	No	Yes	None	Asphalt	East	Yes	39.0	2.0	0.0	99.0	92.0	72.0	199.0	7.2 No	0.0 N/A	0.0 Yes	14.0	1	43
2572	4/8/2016	Eric survey	Yes	No	No	No	Yes	None	Concrete	South	No	36.0	2.0	0.0	62.0	62.0	58.0	199.0	10.4 Yes	8.0 Yes	0.0 Yes	82.0	1	45
2573	4/8/2016	Eric survey	Yes	No	No	No	Yes	None	Concrete	North	Yes	35.0	2.0	0.0	147.0	173.0	53.0	199.0	5.5 Yes	8.0 Yes	0.0 Yes	14.0	1	43
2576	4/8/2016	Eric survey	Yes	No	No	No	Yes	None	Asphalt	South	No	35.0	2.0	0.0	58.0	82.0	56.0	199.0	3.7 Yes	10.0 Yes	0.0 No	0.0	1	43
2598	4/13/2016	Eric survey	Yes	Yes	Yes	Yes	Yes	None	Concrete	East	Yes	37.0	2.0	0.0	8.0	104.0	131.0	116.0	4.0 Yes	8.0 No	0.0 No	0.0	1	43
2599	4/13/2016	Eric survey	Yes	Yes	Yes	Yes	Yes	None	Concrete	West	Yes	35.0	2.0	0.0	15.0	68.0	130.0	118.0	3.3 Yes	8.0 Yes	0.0 No	0.0	1	43
2605	4/13/2016	Eric survey	Yes	No	No	No	Yes	None	Concrete	East	No	36.0	2.0	0.0	8.0	73.0	60.0	199.0	4.7 Yes	6.0 Yes	0.0 No	0.0	1	43
3603	4/14/2016	Eric survey	Yes	Yes	Yes	Yes	Yes	None	Asphalt	East	Yes	37.0	2.0	0.0	0.0	106.0	62.0	199.0	4.7 Yes	10.0 Yes	0.0 No	0.0	1	43
3619	4/14/2016	Eric survey	Yes	No	No	No	Yes	None	Asphalt	West	Yes	37.0	2.0	0.0	0.0	70.0	56.0	199.0	2.3 Yes	6.0 Yes	0.0 No	0.0	1	43
3624	4/14/2016	Eric survey	Yes	No	No	No	Yes	None	Concrete	West	Yes	35.0	2.0	0.0	20.0	63.0	60.0	199.0	3.4 Yes	8.0 No	0.0 No	0.0	1	43
3629	4/15/2016	Eric survey	Yes	No	No	No	Yes	None	Asphalt	West	No	35.0	2.0	0.0	18.0	102.0	54.0	82.0	3.7 No	0.0 N/A	0.0 No	0.0	1	43
3635	4/15/2016	Eric survey	Yes	No	No	No	Yes	None	Asphalt	East	No	36.0	2.0	0.0	24.0	64.0	58.0	199.0	8.8 Yes	7.0 Yes	0.0 No	0.0	1	45
4684	4/29/2016	Wesdot	Yes	No	No	No	Yes	None	Asphalt	East	No	38.0	2.0	38.0	150.0	150.0	68.0	199.0	0.0 No	0.0 N/A	0.0 No	0.0	1	42
1179	3/9/2016	Nichols district 1	Yes	No	Yes	No	Yes	None	Concrete	North	No	47.5	2.0	0.0	8.0	107.0	103.0	75.0	4.3 No	0.0 N/A	0.0 No	0.0	1	42
1180	3/9/2016	Nichols district 1	Yes	No	Yes	No	Yes	None	Concrete	South	No	47.5	2.0	0.0	20.0	114.0	103.0	72.0	3.0 No	0.0 N/A	0.0 No	0.0	1	42
1181	3/9/2016	Wilkinson District 1	Yes	No	No	No	Yes	None	Concrete	North	Yes	44.0	2.0	0.0	18.0	52.0	60.0	63.0	7.0 Yes	10.0 Yes	0.0 No	0.0	1	42
1183	3/9/2016	Wilkinson District 1	Yes	No	No	No	Yes	None	Concrete	East	No	35.0	2.0	0.0	124.0	141.0	110.0	115.0	1.0 Yes	16.0 No	0.0 Yes	276.0	1	41
1187	3/9/2016	Wilkinson District 1	Yes	No	Yes	No	Yes	None	Concrete	East	No	35.0	2.0	0.0	0.0	75.0	53.0	110.0	2.0 Yes	18.0 No	0.0 No	0.0	1	41
1189	3/10/2016	Wilkinson District 1	Yes	No	Yes	No	Yes	None	Concrete	South	Yes	40.0	2.0	0.0	0.0	137.0	60.0	130.0	1.0 Yes	18.0 Yes	0.0 No	0.0	1	41
2273	3/17/2016	Nichols district 1	Yes	No	Yes	No	Yes	None	Concrete	South	No	31.0	2.0	0.0	0.0	84.0	79.0	60.0	0.5 Yes	14.0 Yes	0.0 No	0.0	1	41
2293	3/21/2016	Wilkinson District 1	Yes	No	No	No	Yes	None	Asphalt	South	Yes	36.0	2.0	0.0	3.0	380.0	60.0	60.0	2.0 Yes	12.0 Yes	0.0 No	0.0	1	41
2403	3/24/2016	Wesdot	Yes	No	No	No	Yes	None	Concrete	South	No	39.0	2.0	39.0	30.0	82.0	60.0	199.0	3.0 Yes	0.0 Yes	0.0 Yes	480.0	1	42
2406	3/24/2016	Wesdot	Yes	No	No	No	Yes	None	Concrete	North	Yes	38.0	2.0	30.0	48.0	105.0	55.0	199.0	8.0 Yes	0.0 No	0.0 Yes	360.0	1	36
2412	3/24/2016	Nichols district 1	No	No	No	No	Yes	None	Concrete	North	No	37.5	2.0	0.0	34.0	84.0	79.0	79.0	2.0 Yes	16.0 Yes	0.0 No	0.0	1	41

2419	3/28/2016	Wesdot	Yes	No	No	No	Yes	None	Asphalt	East	No	43.0	2.0	32.0	174.0	168.0	60.0	199.0	0.0 Yes	0.0 Yes	0.0 No	0.0	1	41
2455	4/1/2016	Wesdot	Yes	No	Yes	No	Yes	None	Concrete	West	Yes	31.0	2.0	31.0	0.0	82.0	60.0	199.0	8.0 No	0.0 N/A	0.0 Yes	720.0	1	36
2460	4/1/2016	Wesdot	Yes	No	Yes	No	Yes	None	Concrete	West	No	37.0	2.0	31.0	0.0	60.0	60.0	199.0	6.0 Yes	0.0 Yes	0.0 Yes	720.0	1	42
2461	4/1/2016	Wesdot	Yes	No	Yes	No	Yes	None	Concrete	East	No	28.0	2.0	27.0	0.0	110.0	60.0	199.0	4.0 Yes	0.0 Yes	0.0 Yes	720.0	1	42
2463	4/1/2016	Wesdot	Yes	No	Yes	No	Yes	None	Concrete	West	No	36.0	2.0	33.0	53.0	70.0	100.0	199.0	3.0 Yes	0.0 No	0.0 Yes	360.0	1	42
2465	4/4/2016	Nichols district 1	Yes	No	No	No	Yes	None	Concrete	South	No	32.0	2.0	0.0	0.0	108.0	66.0	210.0	2.0 Yes	32.0 No	0.0 No	0.0	1	41
2488	4/5/2016	Wesdot	Yes	No	No	No	Yes	None	Asphalt	South	Yes	32.0	2.0	32.0	0.0	150.0	60.0	110.0	4.0 No	0.0 N/A	0.0 Yes	230.0	1	42
2509	4/6/2016	Eric survey	Yes	No	No	No	Yes	None	Asphalt	North	Yes	48.0	2.0	0.0	0.0	60.0	48.0	199.0	3.7 Yes	8.0 Yes	0.0 No	0.0	1	42
2515	4/6/2016	Wesdot	Yes	No	No	No	Yes	None	Asphalt	South	No	47.0	2.0	47.0	142.0	145.0	48.0	90.0	0.0 No	0.0 N/A	0.0 No	0.0	1	41
2518	4/6/2016	Wesdot	Yes	No	No	No	Yes	None	Asphalt	West	No	45.0	2.0	40.0	66.0	144.0	64.0	199.0	0.0 No	0.0 N/A	0.0 No	0.0	1	41
2523	4/6/2016	Eric survey	Yes	No	Yes	No	Yes	None	Concrete	North	Yes	45.0	2.0	0.0	78.0	35.0	55.0	60.0	2.5 No	0.0 N/A	0.0 Yes	137.0	1	42
2528	4/6/2016	Eric survey	Yes	No	Yes	No	Yes	None	Concrete	South	Yes	42.0	2.0	0.0	12.0	75.0	58.0	137.0	2.7 Yes	7.0 No	0.0 No	0.0	1	42
2600	4/13/2016	Eric survey	Yes	No	No	No	Yes	None	Concrete	South	Yes	42.0	2.0	0.0	8.0	120.0	94.0	199.0	4.2 Yes	10.0 Yes	0.0 No	0.0	1	42
4649	4/25/2016	Wesdot	Yes	No	No	No	Yes	None	Concrete	North	No	33.0	2.0	33.0	12.0	112.0	58.0	199.0	4.0 Yes	0.0 Yes	0.0 Yes	168.0	1	42
4693	5/16/2016	Nichols dist 1	Yes	No	No	No	Yes	None	Concrete	South	No	43.0	2.0	0.0	0.0	78.0	73.0	55.0	4.0 No	0.0 N/A	0.0 No	0.0	1	42
1152	3/8/2016	N30DFS	Yes	No	No	No	Yes	None	Concrete	South	No	35.0	2.0	32.0	0.0	100.0	87.0	199.0	2.0 Yes	37.0 No	0.0 Yes	717.0	1	40
1155	3/8/2016	Wilkinson District 1	Yes	No	Yes	No	Yes	None	Concrete	South	Yes	52.0	2.0	0.0	60.0	94.0	72.0	80.0	2.0 Yes	24.0 No	0.0 No	0.0	1	40
2221	3/16/2016	Wesdot	Yes	No	No	No	Yes	None	Brick	South	Yes	42.0	2.0	32.0	14.0	60.0	120.0	199.0	4.0 No	0.0 Yes	0.0 Yes	500.0	1	41
2233	3/16/2016	Ben dot	Yes	No	No	No	Yes	None	Concrete	East	No	51.0	2.0	42.0	39.0	66.0	55.0	175.0	4.0 Yes	0.0 Yes	0.0 Yes	145.0	1	41
2258	3/16/2016	Nichols district 1	Yes	No	Yes	No	Yes	None	Concrete	South	No	33.0	2.0	0.0	124.0	95.0	90.0	60.0	1.0 No	0.0 N/A	0.0 No	0.0	1	40
2270	3/16/2016	Wilkinson District 1	Yes	No	No	No	Yes	Permanent	Concrete	South	No	50.0	2.0	0.0	50.0	93.0	71.0	80.0	2.0 Yes	21.0 Yes	0.0 No	0.0	1	40
2295	3/21/2016	Wilkinson District 1	Yes	No	No	No	Yes	None	Unpaved	East	No	37.0	2.0	0.0	100.0	185.0	60.0	72.0	2.0 Yes	8.0 Yes	0.0 No	0.0	1	40
2316	3/22/2016	N30DFS	Yes	No	No	No	Yes	None	Concrete	East	No	30.0	2.0	33.0	0.0	72.0	56.0	199.0	2.0 Yes	14.0 Yes	0.0 Yes	439.0	1	40
2402	3/24/2016	Wesdot	Yes	No	No	No	Yes	None	Concrete	North	No	43.0	2.0	35.0	0.0	82.0	60.0	199.0	3.0 Yes	0.0 Yes	0.0 Yes	480.0	1	41
2487	4/5/2016	Wesdot	Yes	No	No	No	Yes	None	Asphalt	West	Yes	46.0	2.0	36.0	0.0	48.0	60.0	110.0	4.0 No	0.0 N/A	0.0 Yes	230.0	1	41
2556	4/8/2016	Ben dot	Yes	No	No	No	Yes	None	Concrete	North	No	45.0	2.0	37.0	0.0	88.0	72.0	180.0	4.0 No	0.0 N/A	0.0 Yes	900.0	1	41
4646	4/25/2016	Wesdot	Yes	No	No	No	Yes	None	Concrete	South	Yes	37.0	2.0	32.0	12.0	84.0	63.0	80.0	1.0 Yes	28.0 No	0.0 Yes	190.0	1	40
4691	5/11/2016	Nichols dist1	Yes	No	No	No	Yes	None	Asphalt	North	Yes	43.0	2.0	0.0	0.0	75.0	60.0	150.0	1.0 Yes	14.0 Yes	0.0 No	0.0	1	40
1	2/2/2016		Yes	No	No	No	Yes	None	Concrete	North	No	39.0	2.0	29.5	0.0	70.0	50.0	199.0	0.5 No	0.0 Yes	0.0 No	0.0	1	39
2	2/2/2016	N30DFS	Yes	No	No	No	Yes	None	Concrete	South	Yes	41.0	2.0	29.0	0.0	95.0	199.0	75.0	1.0 No	0.0 N/A	0.0 No	0.0	1	39
3	2/2/2016	N30DFS	Yes	No	No	No	Yes	None	Concrete	South	Yes	41.0	2.0	95.0	0.0	95.0	199.0	70.0	1.0 No	0.0 N/A	0.0 No	0.0	1	39
1096	2/29/2016	N30DFS	Yes	No	No	No	Yes	None	Concrete	East	Yes	24.0	2.0	32.0	41.0	72.0	60.0	199.0	2.0 No	0.0 N/A	0.0 No	0.0	1	39
1137	3/8/2016	Ben dot	Yes	No	Yes	No	Yes	None	Concrete	North	No	39.0	2.0	36.0	34.0	58.0	54.0	199.0	0.0 Yes	0.0 Yes	0.0 No	0.0	1	39
1147	3/8/2016	N30DFS	Yes	No	No	No	Yes	None	Concrete	East	No	32.0	2.0	28.0	48.0	80.0	199.0	199.0	2.0 No	0.0 N/A	0.0 No	0.0	1	39
1167	3/9/2016	N30DFS	Yes	No	No	No	Yes	Permanent	Concrete	South	No	35.0	2.0	30.0	28.0	106.0	40.0	66.0	2.0 No	0.0 N/A	0.0 No	0.0	1	39
2193	3/14/2016	N30DFS	Yes	No	No	No	Yes	None	Asphalt	North	No	30.0	2.0	42.0	2.0	120.0	47.0	140.0	1.0 Yes	7.0 Yes	0.0 No	0.0	1	39
2213	3/15/2016	Ben dot	Yes	No	No	No	Yes	None	Concrete	East	Yes	33.0	2.0	31.0	0.0	67.0	57.0	199.0	0.0 Yes	0.0 No	0.0 No	0.0	1	39
2218	3/15/2016	Wesdot	Yes	No	No	No	Yes	None	Asphalt	West	Yes	38.0	2.0	36.0	8.0	127.0	61.0	199.0	0.0 Yes	0.0 Yes	0.0 No	0.0	1	39
2219	3/15/2016	Ben dot	Yes	No	No	No	Yes	None	Concrete	North	No	34.0	2.0	29.0	16.0	78.0	60.0	199.0	2.0 No	0.0 N/A	0.0 No	0.0	1	39
2220	3/15/2016	Ben dot	Yes	No	No	No	Yes	None	Concrete	South	Yes	34.0	2.0	31.0	16.0	78.0	60.0	108.0	0.0 Yes	0.0 Yes	0.0 No	0.0	1	39
2223	3/16/2016	Wesdot	Yes	No	No	No	Yes	None	Concrete	North	No	41.0	2.0	40.0	0.0	73.0	58.0	199.0	1.0 No	0.0 No	0.0 No	0.0	1	39
2234	3/16/2016	Ben dot	Yes	No	No	No	Yes	None	Concrete	West	No	43.0	2.0	33.0	48.0	42.0	38.0	125.0	2.0 Yes	15.0 No	0.0 Yes	372.0	1	39
2235	3/16/2016	Ben dot	Yes	No	No	No	Yes	None	Concrete	South	No	47.0	2.0	39.0	0.0	69.0	60.0	48.0	0.0 Yes	0.0 Yes	0.0 Yes	372.0	1	39
2279	3/18/2016	Wesdot	Yes	No	No	No	No	None	Asphalt	North	No	40.0	2.0	28.0	0.0	77.0	56.0	199.0	2.0 No	0.0 N/A	0.0 No	0.0	1	39
2287	3/18/2016	Wesdot	Yes	No	Yes	No	Yes	None	Asphalt	East	No	37.0	2.0	37.0	0.0	80.0	60.0	199.0	0.0 Yes	0.0 Yes	0.0 No	0.0	1	39
2290	3/18/2016	Wesdot	Yes	No	Yes	No	Yes	None	Asphalt	West	No	41.0	2.0	41.0	0.0	80.0	64.0	199.0	2.0 Yes	0.0 Yes	0.0 No	0.0	1	39
2299	3/22/2016	Wesdot	Yes	No	No	No	Yes	None	Concrete	East	Yes	39.0	2.0	36.0	12.0	90.0	70.0	140.0	0.0 Yes	0.0 Yes	0.0 No	0.0	1	39
2304	3/22/2016	Wesdot	Yes	No	No	No	Yes	None	Asphalt	West	Yes	38.0	2.0	36.0	24.0	60.0	58.0	199.0	2.0 No	0.0 N/A	0.0 No	0.0	1	39
2323	3/22/2016	Wesdot	Yes	No	No	No	No	None	Concrete	North	No	41.0	2.0	41.0	12.0	36.0	52.0	199.0	2.0 No	0.0 N/A	0.0 No	0.0	1	39
2326	3/22/2016	Wesdot	Yes	No	No	No	Yes	None	Concrete	South	Yes	40.0	2.0	35.0	20.0	33.0	60.0	199.0	0.0 No	0.0 No	0.0 No	0.0	1	39
2346	3/23/2016	Wesdot	Yes	No	No	No	Yes	None	Concrete	North	Yes	38.0	2.0	34.0	24.0	19.0	42.0	199.0	2.0 No	0.0 N/A	0.0 No	0.0	1	39
2347	3/23/2016	Wesdot	Yes	No	No	No	Yes	None	Concrete	South	Yes	35.0	2.0	27.0	12.0	32.0	48.0	199.0	0.0 Yes	0.0 Yes	0.0 No	0.0	1	39
2348	3/23/2016	Wesdot	Yes	No	No	No	Yes	None	Concrete	North	Yes	35.0	2.0	35.0	0.0	70.0	55.0	150.0	0.0 Yes	0.0 Yes	0.0 No	0.0	1	39
2350	3/23/2016	Wesdot	Yes	No	Yes	No	Yes	None	Asphalt	East	No	35.0	2.0	31.0	58.0	53.0	50.0	199.0	0.0 No	0.0 N/A	0.0 No	0.0	1	39
2352	3/23/2016	Wesdot	Yes	No	No	No	Yes	None	Concrete	North	No	36.0	2.0	32.0	0.0	140.0	60.0	199.0	1.0 Yes	0.0 Yes	0.0 No	0.0	1	39
2353	3/23/2016	Wesdot	Yes	No	No	No	Yes	None	Concrete	North	No	39.0	2.0	29.0	20.0	66.0	60.0	90.0	0.0 Yes	0.0 Yes	0.0 No	0.0	1	39
2354	3/23/2016	Wesdot	Yes	No	No	No	Yes	None	Concrete	South	Yes	36.0	2.0	33.0	0.0	83.0	50.0	199.0	2.0 Yes	0.0 Yes	0.0 No	0.0	1	39
2355	3/23/2016	Wesdot	Yes	No	No	No	Yes	None	Concrete	East	No	37.0	2.0	33.0	0.0	72.0	52.0	199.0	0.0 No	0.0 N/A	0.0 No	0.0	1	39
2356	3/23/2016	Wesdot	Yes	No	No	No	Yes	None	Concrete	South	No	37.0	2.0	35.0	0.0	85.0	50.0	199.0	2.0 Yes	0.0 Yes	0.0 No	0.0	1	39
2357	3/23/2016	Wesdot	Yes	No	No	No	Yes	None	Concrete	North	No	38.0	2.0	35.0	54.0	108.0	52.0	199.0	0.0 Yes	10.0 Yes	0.0 No	0.0	1	39
2366	3/23/2016	Wesdot	Yes	No	No	No	Yes	None	Concrete	South	Yes	40.0	2.0	27.0	0.0	76.0	58.0	76.0	0.0 Yes	0.0 No	0.0 No	0.0	1	39
2367	3/23/2016	Wesdot	Yes	No	No	No	Yes	None	Concrete	North	Yes	40.0	2.0	28.0	0.0	88.0	52.0	199.0	0.0 Yes	0.0 Yes	0.0 No	0.0	1	39
2369	3/23/2016	Wesdot	Yes	No	No	No	Yes	Permanent	Concrete	North	No	32.0	2.0	32.0	0.0	80.0	50.0	199.0	0.0 Yes	0.0 Yes	0.0 No	0.0	1	39
2388	3/24/2016	Wesdot	Yes	No	No	No	Yes	None	Asphalt	East	No	39.0	2.0	33.0	0.0	90.0	60.0	199.0	0.0 No	0.0 N/A	0.0 No	0.0	1	39
2390	3/24/2016	Wesdot	Yes	No	No	No	Yes	None	Asphalt	East	No	41.0	2.0	41.0	0.0	90.0	60.0	199.0	0.0 No	0.0 N/A	0.0 No	0.0	1	39
2394	3/24/2016	Wesdot	Yes	No	No	No	Yes	None	Asphalt	East	No	38.0	2.0	38.0	10.0	112.0	55.0	199.0	0.0 No	0.0 N/A	0.0 No	0.0	1	39
2400	3/24/2016	Wesdot	Yes	No	No	No	Yes	None	Concrete	East	Yes	28.0	2.0	28.0	36.0	125.0	60.0	125.0	0.0 Yes	0.0 Yes	0.0 No	0.0	1	39
2401	3/24/2016	Wesdot	Yes	No	No	No	Yes	None	Concrete	South	No	37.0	2.0	35.0	58.0	77.0	53.0	199.0	0.0 No	0.0 N/A	0.0 No	0.0	1	39
2411	3/24/2016	Wesdot	Yes	No	No	No	Yes	None	Concrete	North	No	38.0	2.0	38.0	0.0	96.0	54.0	199.0	2.0 No	0.0 Yes	0.0 No	0.0	1	39
2418	3/28/2016	Wesdot	Yes	No	No	No	Yes	None	Asphalt	West	Yes	41.0	2.0	28.0	48.0	162.0	40.0	84.0	2.0 No	0.0 N/A	0.0 No	0.0	1	39
2421	3/28/2016	Wesdot	Yes	No	No	No	Yes	None	Concrete	North	No	34.0	2.0	34.0	12.0	83.0	60.0	199.0	2.0 No	0.0 N/A	0.0 No	0.0	1	39
2423	3/28/2016	Wesdot	Yes	No	Yes	No	Yes	None	Concrete	East	No	34.0	2.0	36.0	0.0	77.0	60.0	180.0	2.0 No	0.0 N/A	0.0 No	0.0	1	39
2442	3/31/2016	Wesdot	Yes	No	Yes	No	Yes	None	Asphalt	South	No	36.0	2.0	33.0	0.0	92.0	72.0	199.0	0.0 No	0.0 N/A	0.0 No	0.0	1	39
2446	3/31/2016	Wesdot	Yes	No	No	No	Yes	None	Asphalt	West	No	32.0	2.0	32.0	0.0	88.0	60.0	199.0	2.0 No	0.0 N/A	0.0 No	0.0	1	39
2447	3/31/2016	Wesdot	Yes	No	No	No	Yes	None	Unpaved	East	No	33.0	2.0	33.0	0.0	120.0	60.0	58.0	2.0 No	0.0 N/A	0.0 No	0.0	1	39
2449	3/31/2016	Wesdot	Yes	No	No	No	Yes	None	Unpaved	West	No	36.0	2.0	33.0	44.0	80.0	60.0	80.0	2.0 No	0.0 N/A	0.0 No	0.0	1	39
2453	4/1/2016	Wesdot	Yes	No	Yes	No	Yes	None	Concrete	West	Yes	33.0	2.0	25.0	0.0	80.0	60.0	199.0	6.0 No	0.0 N/A	0.0 Yes	720.0	1	40
2454	4/1/2016	Wesdot	Yes	No	Yes	No	Yes	None	Concrete	East	Yes	33.0	2.0	25.0	0.0	94.0	60.0	199.0	6.0 No	0.0 N/A	0.0 Yes	720.0	1	40
2457	4/1/2016	Wesdot	Yes	No	Yes	No	Yes	None	Concrete	West	Yes	29.0	2.0	29.0	0.0	140.0	60.0	199.0	1.0 Yes	0.0 Yes	0.0 No	0.0	1	39
2458	4/1/2016	Wesdot	Yes	No	Yes	No	Yes	None	Concrete	West	Yes	34.0	2.0	34.0	0.0	126.0	60.0	199.0	0.0 Yes	0.0 Yes	0.0 No	0.0	1	39
2459	4/1/2016	Wesdot	Yes	No	Yes	No	Yes	None	Concrete	East	No	32.0	2.0	28.0	34.0	180.0	55.0	180.0	0.0 No	0.0 No	0.0 No	0.0	1	39
2469	4/5/2016	Wesdot	Yes	No	No	No	Yes	None	Asphalt	East	Yes	37.0	2.0	33.0	0.0	52.0	50.0	70.0	0.0 No	0.0 N/A	0.0 No	0.0	1	39
2482	4/5/2016	Wesdot	Yes	No	Yes	No	Yes	None	Asphalt	South	No	41.0	2.0	32.0	50.0	108.0	55.0	199.0	0.0 No	0.0 N/A	0.0 No	0.0	1	39
2485	4/5/2016	Wesdot	Yes	No	Yes	No	Yes	None	Asphalt	West	No	40.0	2.0	28.0	24.0	77.0	52.0	199.0	2.0 No	0.0 No	0.0 No	0.0	1	39
2499	4/6/2016	Wesdot	Yes	No	No	No	Yes	None	Asphalt	South	Yes	33.0	2.0	33.0	60.0	90.0	60.0	199.0	0.0 No	0.0 N/A	0.0 No	0.0	1	39
2500	4/6/2016	Wesdot	Yes	No	No	No	Yes	None	Asphalt	South	No	28.0	2.0	28.0	0.0	93.0	60.0	199.0	2.0 No	0.0 N/A	0.0 No	0.0	1	39
2503	4/6/2016	Wesdot	Yes	No	No	No	Yes	None	Asphalt	North	No	30.0	2.0	30.0	24.0	80.0	60.0	199.0	0.0 No	0.0 No	0.0 No	0.0	1	39
2520	4/6/2016	Wesdot	Yes	No	No	No	No	None	Asphalt	South	Yes	34.0	2.0	34.0	30.0	88.0	60.0	199.0	0.0 Yes	0.0 N/A	0.0 No	0.0	1	39
2536	4/7/2016	Ben dot	Yes	No	No	No	Yes	None	Concrete	East	Yes	41.0	2.0	41.0	0.0	112.0	72.0	180.0	0.0 Yes	0.0 Yes	0.0 No	0.0	1	39
2541	4/7/2016	Ben dot	Yes	No	No	No	Yes	None	Asphalt	North	Yes	41.0	2.0	35.0	0.0	44.0	65.0	72.0	0.0 No	0.0 N/A	0.0 No	0.0	1	39
2549	4/7/2016	Eric survey	Yes	No	Yes	Yes	Yes	None	Concrete	South	Yes	37.0	2.0	0.0	42.0	74.0	60.0	199.0	4.8 Yes	10.0 Yes	0.0 Yes	248.0	1	40
2551	4/8/2016	Ben dot	Yes	No	No	No	Yes	None	Concrete	North	No	39.0	2.0	38.0	0.0	72.0	65.0	199.0	0.0 No	0.0 N/A	0.0 No	0.0	1	39
2568	4/8/2016	Eric survey	Yes	No	No	No	Yes	None	Asphalt	East	Yes	35.0	2.0	0.0	34.0	148.0	70.0	199.0	4.5 Yes	8.0 No	0.0 Yes	15.0	1	40
2569	4/8/2016	Eric survey	Yes	No	No	No	Yes	None	Asphalt	South	Yes	38.0	2.0	0.0	0.0	158.0	72.0	199.0	4.1 Yes	5.0 Yes	0.0 Yes	14.0	1	40
2579	4/8/2016	Eric survey	Yes	No	No	No	Yes	None	Concrete	North	No	35.0	2.0	0.0	8.0	88.0	56.0	199.0	4.6 Yes	3.0 Yes	0.0 Yes	167.0	1	40
2580	4/8/2016	Eric survey	Yes	No	No	No	Yes	None	Concrete	West	No	38.0	2.0	0.0	21.0	66.0	56.0	199.0	3.6 Yes	6.0 Yes	0.0 Yes	167.0	1	40
4638	4/19/2016	Wesdot	Yes	No	Yes	No	Yes	None	Asphalt	North	Yes	37.0	2.0	37.0	52.0	86.0	66.0	199.0	0.0 No	0.0 N/A	0.0 No	0.0	1	39
4642	4/19/2016	Wesdot	Yes	No	Yes	No	Yes	None	Asphalt	North	Yes	31.0	2.0	31.0	12.0	68.0	60.0	72.0	0.0 Yes	0.0 Yes	0.0 No	0.0	1	39
4656	4/27/2016	Wesdot	Yes	No	No	No	Yes	None	Concrete	South	Yes	32.0	2.0	30.0	10.0	64.0	94.0	199.0	1.0 Yes	0.0 Yes	0.0 No	0.0	1	39
4657	4/27/2016	Wesdot	Yes	No	No	No	Yes	None	Concrete	North	No	31.0	2.0	31.0	34.0	88.0	60.0	199.0	2.0 Yes	0.0 Yes	0.0 No	0.0	1	39
4665	4/29/2016	Wesdot	Yes	No	Yes	Yes	Yes	None	Concrete	West	Yes	38.0	2.0	34.0	0.0	75.0	55.0	199.0	1.0 Yes	0.0 Yes	0.0 No	0.0	1	39
4666	4/29/2016	Wesdot	Yes	No	Yes	Yes	Yes	None	Concrete	South	No	41.0	2.0	36.0	0.0	105.0	60.0	199.0	2.0 No	0.0 No	0.0 No	0.0	1	39
4667	4/29/2016	Wesdot	Yes	No	Yes	Yes	Yes	None	Concrete	North	No	39.0	2.0	35.0	0.0	77.0	54.0	199.0	2.0 No	0.0 No	0.0 No	0.0	1	39
4671	4/29/2016	Wesdot	Yes	No	No	No	Yes	None	Asphalt	East	No	41.0	2.0	41.0	48.0	140.0	60.0	94.0	2.0 No	0.0 No	0.0 No	0.0	1	39
4675	4/29/2016	Wesdot	Yes	Yes	No	No	Yes	None	Concrete	South	No	40.0	2.0	40.0	0.0	70.0	54.0	199.0	2.0 No	0.0 N/A	0.0 No	0.0	1	39
4681	4/29/2016	Wesdot	Yes	No	No	No	Yes	None	Concrete	West	Yes	40.0	2.0	37.0	16.0	80.0	60.0	199.0	2.0 Yes	0.0 No	0.0 No	0.0	1	39
4682	4/29/2016	Wesdot	Yes	No	No	No	Yes	None	Concrete	East	No	40.0	2.0	36.0	0.0	77.0	55.0	199.0	2.0 No	0.0 No	0.0 No	0.0	1	39

4683	4/29/2016 Wesdot	Yes	No	No	No	Yes	None	Concrete	South	No	36.0	2.0	36.0	12.0	88.0	60.0	199.0	2.0 No	0.0 N/A	0.0 No	0.0	1	39
4686	4/29/2016 Ben dot	Yes	No	No	No	Yes	None	Concrete	South	No	37.0	2.0	37.0	0.0	80.0	60.0	199.0	2.0 Yes	0.0 Yes	0.0 No	0.0	1	39
4689	4/29/2016 Ben dot	Yes	No	No	No	Yes	None	Concrete	West	No	39.0	2.0	37.0	0.0	68.0	60.0	110.0	0.0 No	0.0 Yes	0.0 N/A	0.0	1	#N/A
6	2/2/2016 N30DFS	Yes	No	No	No	Yes	None	Concrete	West	No	42.0	2.0	31.5	0.0	82.0	55.0	78.0	2.0 No	0.0 N/A	0.0 No	0.0	1	38
1111	3/7/2016 Wesdot	Yes	No	No	No	Yes	None	Concrete	North	No	42.0	2.0	34.0	54.0	65.0	64.0	199.0	0.0 No	0.0 N/A	0.0 No	0.0	1	38
1112	3/7/2016 Wesdot	Yes	No	No	No	Yes	None	Concrete	West	Yes	46.0	2.0	42.0	0.0	99.0	69.0	199.0	0.0 Yes	8.0 No	0.0 No	0.0	1	38
1135	3/8/2016 Ben dot	Yes	No	Yes	No	Yes	None	Asphalt	South	No	45.0	2.0	41.0	55.0	83.0	69.0	199.0	0.0 No	0.0 N/A	0.0 No	0.0	1	38
1182	3/9/2016 Wilkinson District 1	Yes	No	No	No	Yes	None	Concrete	South	No	39.0	2.0	0.0	15.0	64.0	60.0	66.0	2.0 Yes	15.0 Yes	0.0 Yes	276.0	1	38
2224	3/16/2016 Wesdot	Yes	No	No	No	Yes	None	Asphalt	West	No	44.0	2.0	44.0	0.0	88.0	48.0	199.0	0.0 No	0.0 Yes	0.0 No	0.0	1	38
2238	3/16/2016 Ben dot	Yes	No	No	No	Yes	None	Concrete	North	No	46.0	2.0	40.0	0.0	72.0	57.0	199.0	1.0 No	0.0 N/A	0.0 No	0.0	1	38
2288	3/18/2016 Wesdot	Yes	No	Yes	No	Yes	None	Concrete	East	Yes	47.0	2.0	42.0	0.0	180.0	68.0	199.0	2.0 Yes	0.0 Yes	0.0 No	0.0	1	38
2291	3/18/2016 Wesdot	Yes	No	Yes	No	Yes	None	Asphalt	East	No	42.0	2.0	37.0	0.0	82.0	67.0	199.0	2.0 No	0.0 Yes	0.0 No	0.0	1	38
2321	3/22/2016 Wesdot	Yes	No	No	No	Yes	None	Asphalt	North	No	43.0	2.0	39.0	0.0	86.0	70.0	199.0	2.0 No	0.0 N/A	0.0 No	0.0	1	38
2322	3/22/2016 Wesdot	Yes	No	No	No	Yes	None	Asphalt	South	No	48.0	2.0	36.0	20.0	98.0	60.0	199.0	0.0 No	0.0 N/A	0.0 No	0.0	1	38
2339	3/22/2016 N30DFS	Yes	No	No	No	Yes	None	Concrete	East	No	42.0	2.0	39.0	0.0	42.0	42.0	199.0	2.0 Yes	0.0 Yes	0.0 No	0.0	1	38
2384	3/24/2016 Wesdot	Yes	No	No	Yes	Yes	None	Asphalt	South	No	43.0	2.0	35.0	0.0	92.0	60.0	199.0	2.0 No	0.0 N/A	0.0 No	0.0	1	38
2389	3/24/2016 Wesdot	Yes	No	No	No	Yes	None	Asphalt	South	No	45.0	2.0	36.0	44.0	62.0	45.0	199.0	1.0 No	0.0 N/A	0.0 No	0.0	1	38
2408	3/24/2016 Wesdot	Yes	No	No	No	Yes	None	Concrete	East	No	49.0	2.0	38.0	0.0	94.0	58.0	199.0	2.0 No	0.0 N/A	0.0 No	0.0	1	38
2409	3/24/2016 Wesdot	Yes	No	No	No	Yes	None	Concrete	North	No	42.0	2.0	30.0	0.0	77.0	60.0	199.0	1.0 No	0.0 N/A	0.0 No	0.0	1	38
2410	3/24/2016 Wesdot	Yes	No	No	No	Yes	None	Asphalt	South	No	42.0	2.0	38.0	0.0	86.0	54.0	199.0	1.0 Yes	0.0 Yes	0.0 No	0.0	1	38
2420	3/28/2016 Wesdot	Yes	No	No	No	Yes	None	Concrete	North	Yes	43.0	2.0	30.0	36.0	72.0	52.0	199.0	0.0 Yes	0.0 Yes	0.0 No	0.0	1	38
2443	3/31/2016 Wesdot	Yes	No	Yes	No	Yes	None	Concrete	North	No	43.0	2.0	36.0	18.0	90.0	80.0	70.0	0.0 No	0.0 N/A	0.0 No	0.0	1	38
2467	4/5/2016 Wesdot	Yes	No	No	No	Yes	None	Concrete	West	No	42.0	2.0	39.0	32.0	72.0	50.0	199.0	0.0 No	0.0 N/A	0.0 No	0.0	1	38
2468	4/5/2016 Wesdot	Yes	No	No	No	Yes	None	Concrete	East	No	42.0	2.0	40.0	10.0	65.0	50.0	199.0	0.0 Yes	0.0 Yes	0.0 No	0.0	1	38
2473	4/5/2016 Wesdot	Yes	No	No	No	Yes	None	Asphalt	North	No	44.0	2.0	32.0	0.0	57.0	50.0	199.0	0.0 Yes	0.0 N/A	0.0 No	0.0	1	38
2483	4/5/2016 Wesdot	Yes	No	Yes	No	Yes	None	Asphalt	South	Yes	42.0	2.0	34.0	0.0	54.0	50.0	199.0	2.0 No	0.0 N/A	0.0 No	0.0	1	38
2484	4/5/2016 Wesdot	Yes	No	Yes	No	Yes	None	Asphalt	East	Yes	43.0	2.0	38.0	0.0	74.0	55.0	199.0	2.0 Yes	0.0 Yes	0.0 No	0.0	1	38
2489	4/5/2016 Wesdot	Yes	No	No	No	Yes	None	Asphalt	East	No	46.0	2.0	46.0	0.0	58.0	54.0	199.0	0.0 No	0.0 N/A	0.0 No	0.0	1	38
2519	4/6/2016 Wesdot	Yes	No	No	No	No	None	Asphalt	North	Yes	42.0	2.0	35.0	32.0	105.0	60.0	199.0	2.0 No	0.0 N/A	0.0 No	0.0	1	38
2527	4/6/2016 Eric survey	Yes	No	Yes	No	Yes	None	Concrete	North	Yes	43.0	2.0	0.0	54.0	147.0	54.0	107.0	4.5 No	0.0 N/A	0.0 Yes	143.0	1	39
2534	4/7/2016 Ben dot	Yes	No	No	No	Yes	None	Concrete	West	No	44.0	2.0	42.0	33.0	128.0	72.0	96.0	2.0 No	0.0 N/A	0.0 No	0.0	1	38
2535	4/7/2016 Ben dot	Yes	No	No	No	Yes	None	Concrete	South	No	44.0	2.0	43.0	44.0	112.0	72.0	112.0	0.0 No	0.0 N/A	0.0 No	0.0	1	38
2543	4/7/2016 Ben dot	Yes	No	No	No	Yes	None	Asphalt	South	Yes	42.0	2.0	33.0	24.0	55.0	88.0	199.0	2.0 No	0.0 N/A	0.0 No	0.0	1	38
3617	4/14/2016 Eric survey	Yes	No	No	No	Yes	None	Asphalt	West	Yes	38.0	2.0	0.0	24.0	89.0	56.0	199.0	1.1 Yes	24.0 Yes	0.0 Yes	183.0	1	38
4658	4/28/2016 Ben dot	Yes	No	No	No	Yes	None	Concrete	West	No	43.0	2.0	39.0	36.0	80.0	60.0	199.0	1.0 No	0.0 N/A	0.0 No	0.0	1	38
4660	4/28/2016 Wesdot	Yes	No	No	No	Yes	None	Concrete	West	No	42.0	2.0	29.0	36.0	115.0	72.0	199.0	2.0 No	0.0 N/A	0.0 No	0.0	1	38
4676	4/29/2016 Wesdot	Yes	Yes	No	No	Yes	None	Concrete	East	No	42.0	2.0	39.0	0.0	100.0	100.0	135.0	0.0 No	0.0 N/A	0.0 No	0.0	1	38
4679	4/29/2016 Wesdot	Yes	No	No	No	Yes	None	Concrete	East	Yes	42.0	2.0	32.0	40.0	80.0	55.0	199.0	2.0 Yes	0.0 No	0.0 No	0.0	1	38
4680	4/29/2016 Wesdot	Yes	No	No	No	Yes	None	Concrete	West	Yes	42.0	2.0	38.0	0.0	80.0	60.0	199.0	2.0 Yes	0.0 No	0.0 No	0.0	1	38
1142	3/8/2016 N30DFS	Yes	No	No	No	Yes	None	Concrete	East	No	34.0	2.0	18.0	18.0	118.0	84.0	81.0	0.0 No	0.0 N/A	0.0 No	0.0	1	37
1145	3/8/2016 N30DFS	Yes	No	No	No	Yes	None	Concrete	West	No	36.0	2.0	19.0	19.0	85.0	90.0	199.0	0.0 No	0.0 N/A	0.0 No	0.0	1	37
1158	3/8/2016 Nichols district 1	Yes	No	Yes	No	Yes	None	Concrete	West	Yes	39.0	2.0	0.0	24.0	74.0	72.0	115.0	0.5 No	0.0 N/A	0.0 No	0.0	1	37
1162	3/9/2016 N30DFS	Yes	No	No	No	Yes	None	Concrete	South	No	36.0	2.0	15.0	0.0	68.0	66.0	199.0	2.0 No	0.0 N/A	0.0 No	0.0	1	37
1186	3/9/2016 Wilkinson District 1	Yes	No	Yes	No	Yes	None	Concrete	North	Yes	35.0	2.0	0.0	0.0	120.0	60.0	72.0	2.0 Yes	9.0 Yes	0.0 No	0.0	1	37
1192	3/10/2016 Wilkinson District 1	Yes	No	Yes	No	Yes	None	Concrete	South	Yes	37.0	2.0	0.0	0.0	32.0	32.0	56.0	1.0 Yes	4.0 Yes	0.0 No	0.0	1	37
1198	3/10/2016 Nichols district 1	Yes	Yes	Yes	Yes	Yes	Temporary	Concrete	North	No	36.0	2.3	0.0	0.0	82.0	76.0	85.0	1.0 No	0.0 N/A	0.0 No	0.0	1	37
2227	3/16/2016 Sandt DOT	Yes	No	No	No	Yes	Temporary	Concrete	West	No	36.0	2.0	0.0	0.0	77.0	77.0	199.0	2.0 Yes	6.0 Yes	0.0 No	0.0	1	37
2229	3/16/2016 Sandt DOT	Yes	No	No	No	Yes	Temporary	Concrete	East	No	36.0	2.0	0.0	0.0	79.0	79.0	199.0	2.0 Yes	5.0 Yes	0.0 No	0.0	1	37
2260	3/17/2016 Ben dot	Yes	No	No	No	Yes	Permanent	Asphalt	South	No	34.0	2.0	22.0	0.0	62.0	62.0	199.0	1.0 Yes	0.0 Yes	0.0 No	0.0	1	37
2396	3/24/2016 Wesdot	Yes	No	No	No	Yes	None	Concrete	South	No	28.0	2.0	25.0	74.0	98.0	62.0	199.0	2.0 Yes	0.0 N/A	0.0 Yes	360.0	1	37
2399	3/24/2016 Wesdot	Yes	No	No	No	Yes	None	Concrete	West	Yes	30.0	2.0	26.0	0.0	88.0	60.0	199.0	0.0 No	0.0 No	0.0 No	0.0	1	37
2414	3/24/2016 Nichols district 1	No	No	No	No	Yes	None	Concrete	South	No	34.0	2.0	0.0	0.0	78.0	73.0	199.0	1.0 Yes	8.0 Yes	0.0 No	0.0	1	37
2415	3/24/2016 Nichols district 1	No	No	No	No	Yes	None	Concrete	North	No	41.0	2.0	0.0	0.0	76.0	71.0	68.0	2.0 Yes	9.0 Yes	0.0 No	0.0	1	37
2433	3/29/2016 Wilkinson District 1	Yes	No	No	No	Yes	None	Other	West	No	38.0	2.0	0.0	0.0	72.0	72.0	72.0	2.0 Yes	3.0 Yes	0.0 No	0.0	1	37
2436	3/29/2016 Nichols district 1	Yes	No	No	No	Yes	None	Concrete	South	No	37.5	2.3	0.0	0.0	68.0	63.0	94.0	1.5 Yes	9.0 No	0.0 No	0.0	1	37
2444	3/31/2016 Wesdot	Yes	No	Yes	No	Yes	None	Concrete	North	Yes	37.0	2.0	26.0	40.0	90.0	60.0	199.0	2.0 No	0.0 N/A	0.0 No	0.0	1	37
2445	3/31/2016 Wesdot	Yes	No	Yes	No	Yes	None	Concrete	West	No	37.0	2.0	26.0	0.0	72.0	54.0	199.0	2.0 No	0.0 N/A	0.0 No	0.0	1	37
2475	4/5/2016 Eric survey	Yes	No	No	No	Yes	None	Concrete	South	No	41.0	2.0	0.0	8.0	80.0	60.0	199.0	1.9 Yes	9.0 Yes	0.0 No	0.0	1	37
2490	4/5/2016 Eric survey	Yes	No	No	No	Yes	None	Unpaved	North	No	29.0	2.0	0.0	16.0	116.0	45.0	72.0	2.0 No	0.0 N/A	0.0 No	0.0	1	37
2566	4/8/2016 Eric survey	Yes	No	No	No	Yes	None	Concrete	North	No	36.0	2.0	0.0	12.0	70.0	56.0	199.0	2.0 Yes	10.0 Yes	0.0 No	0.0	1	37
2571	4/8/2016 Eric survey	Yes	No	No	No	Yes	None	Concrete	West	No	34.0	2.0	0.0	117.0	64.0	53.0	199.0	1.9 Yes	8.0 Yes	0.0 Yes	82.0	1	37
2595	4/13/2016 Eric survey	Yes	Yes	Yes	Yes	Yes	None	Concrete	East	No	34.0	2.0	0.0	126.0	72.0	59.0	199.0	1.6 Yes	7.0 Yes	0.0 Yes	92.0	1	37
3642	4/15/2016 Eric survey	Yes	No	No	No	Yes	None	Concrete	West	No	38.0	2.0	0.0	32.0	75.0	64.0	148.0	1.8 Yes	6.0 Yes	0.0 No	0.0	1	37
4641	4/19/2016 Wesdot	Yes	No	Yes	No	Yes	None	Concrete	South	No	38.0	2.0	16.0	48.0	66.0	53.0	199.0	2.0 Yes	0.0 Yes	0.0 No	0.0	1	37
1154	3/8/2016 Wilkinson District 1	Yes	No	Yes	No	Yes	None	Concrete	West	No	51.0	2.0	0.0	0.0	64.0	54.0	70.0	1.0 Yes	4.0 No	0.0 No	0.0	1	36
2225	3/16/2016 Wesdot	Yes	No	No	No	Yes	None	Brick	East	Yes	34.0	2.0	34.0	36.0	68.0	120.0	199.0	1.0 No	0.0 Yes	0.0 Yes	500.0	1	36
2282	3/18/2016 Wesdot	Yes	No	Yes	No	Yes	None	Asphalt	East	Yes	41.0	2.0	37.0	34.0	108.0	75.0	199.0	2.0 Yes	0.0 Yes	0.0 Yes	300.0	1	36
2397	3/24/2016 Wesdot	Yes	No	No	No	Yes	None	Concrete	East	No	34.0	2.0	32.0	20.0	102.0	50.0	199.0	2.0 No	0.0 N/A	0.0 Yes	360.0	1	36
2405	3/24/2016 Wesdot	Yes	No	No	No	Yes	None	Concrete	West	No	37.0	2.0	28.0	0.0	84.0	48.0	199.0	0.0 No	0.0 No	0.0 Yes	360.0	1	36
2425	3/28/2016 Wesdot	Yes	No	Yes	No	Yes	None	Concrete	West	No	36.0	2.0	30.0	0.0	82.0	60.0	199.0	1.0 No	0.0 N/A	0.0 Yes	480.0	1	36
2456	4/1/2016 Wesdot	Yes	No	Yes	No	Yes	None	Concrete	East	Yes	35.0	2.0	33.0	55.0	190.0	60.0	199.0	0.0 No	0.0 N/A	0.0 Yes	720.0	1	36
2462	4/1/2016 Wesdot	Yes	No	Yes	No	Yes	None	Brick	East	No	37.0	2.0	32.0	0.0	34.0	38.0	68.0	0.0 Yes	0.0 No	0.0 Yes	360.0	1	36
2553	4/8/2016 Ben dot	Yes	No	No	No	Yes	None	Concrete	North	No	40.0	2.0	38.0	0.0	78.0	64.0	199.0	1.0 No	0.0 N/A	0.0 Yes	1200.0	1	36
2559	4/8/2016 Ben dot	Yes	No	No	No	Yes	None	Concrete	South	No	39.0	2.0	29.0	0.0	105.0	90.0	199.0	1.0 No	0.0 N/A	0.0 Yes	900.0	1	36
4647	4/25/2016 Wesdot	Yes	No	No	No	Yes	Permanent	Unpaved	East	Yes	34.0	2.0	34.0	34.0	120.0	65.0	120.0	0.0 Yes	0.0 No	0.0 Yes	190.0	1	36
4687	4/29/2016 Ben dot	Yes	No	No	No	Yes	None	Concrete	North	No	36.0	2.0	36.0	0.0	70.0	55.0	199.0	2.0 No	0.0 Yes	0.0 Yes	280.0	1	36
4688	4/29/2016 Ben dot	Yes	No	No	No	Yes	None	Concrete	East	No	40.0	2.0	37.0	0.0	80.0	60.0	199.0	2.0 No	0.0 Yes	0.0 Yes	280.0	1	36
4690	5/11/2016 Nichols dist1	Yes	No	No	No	Yes	None	Asphalt	South	No	44.0	2.0	0.0	0.0	180.0	55.0	60.0	2.0 Yes	6.0 Yes	0.0 No	0.0	1	36
2232	3/16/2016 Ben dot	Yes	No	No	No	Yes	None	Concrete	South	No	44.0	2.0	43.0	0.0	76.0	66.0	96.0	1.0 No	0.0 N/A	0.0 Yes	145.0	1	35
2236	3/16/2016 Ben dot	Yes	No	No	No	Yes	None	Concrete	North	No	42.0	2.0	42.0	0.0	72.0	60.0	199.0	2.0 Yes	0.0 Yes	0.0 Yes	200.0	1	35
2237	3/16/2016 Ben dot	Yes	No	No	No	Yes	None	Concrete	West	No	44.0	2.0	38.0	0.0	94.0	88.0	100.0	2.0 Yes	0.0 Yes	0.0 Yes	200.0	1	35
2283	3/18/2016 Wesdot	Yes	No	Yes	No	Yes	None	Asphalt	West	Yes	42.0	2.0	36.0	30.0	72.0	56.0	160.0	0.0 Yes	0.0 Yes	0.0 Yes	300.0	1	35
2324	3/22/2016 Wesdot	Yes	No	No	No	No	None	Concrete	South	Yes	44.0	2.0	38.0	0.0	24.0	54.0	199.0	0.0 Yes	0.0 No	0.0 Yes	580.0	1	35
2325	3/22/2016 Wesdot	Yes	No	No	No	Yes	None	Concrete	North	Yes	42.0	2.0	34.0	10.0	54.0	48.0	199.0	0.0 Yes	0.0 Yes	0.0 Yes	580.0	1	35
2472	4/5/2016 Wesdot	Yes	No	No	No	Yes	None	Asphalt	South	No	44.0	2.0	31.0	0.0	32.0	60.0	199.0	0.0 Yes	0.0 N/A	0.0 Yes	264.0	1	35
2552	4/8/2016 Ben dot	Yes	No	No	No	Yes	None	Concrete	South	No	42.0	2.0	37.0	0.0	88.0	80.0	199.0	1.0 No	0.0 N/A	0.0 Yes	1200.0	1	35
2557	4/8/2016 Ben dot	Yes	No	No	No	Yes	None	Asphalt	South	No	42.0	2.0	37.0	0.0	90.0	60.0	199.0	2.0 No	0.0 N/A	0.0 Yes	900.0	1	35
2558	4/8/2016 Ben dot	Yes	No	No	No	Yes	None	Concrete	North	No	48.0	2.0	37.0	0.0	124.0	64.0	199.0	0.0 No	0.0 N/A	0.0 Yes	900.0	1	35
2226	3/16/2016 Sandt DOT	Yes	No	No	No	Yes	None	Concrete	North	No	36.0	2.0	0.0	0.0	77.0	77.0	199.0	2.0 Yes	6.0 Yes	0.0 Yes	240.0	1	34
2228	3/16/2016 Sandt DOT	Yes	No	No	No	Yes	None	Concrete	South	No	36.0	2.0	0.0	0.0	67.0	67.0	199.0	2.0 Yes	8.0 Yes	0.0 Yes	240.0	1	34
2230	3/16/2016 Sandt DOT	Yes	No	No	No	Yes	None	Concrete	South	Yes	39.0	2.0	0.0	0.0	72.0	72.0	199.0	2.0 Yes	7.0 Yes	0.0 Yes	240.0	1	34
2231	3/16/2016 Sandt DOT	Yes	No	No	No	Yes	None	Concrete	North	No	36.0	2.0	0.0	0.0	62.0	62.0	199.0	2.0 Yes	7.0 Yes	0.0 Yes	240.0	1	34
2548	4/7/2016 Eric survey	Yes	No	Yes	Yes	Yes	None	Concrete	East	Yes	37.0	2.0	0.0	28.0	79.0	62.0	199.0	0.7 Yes	10.0 Yes	0.0 Yes	248.0	1	34
2604	4/13/2016 Eric survey	Yes	No	No	No	Yes	None	Concrete	West	No	36.0	2.0	0.0	22.0	73.0	60.0	199.0	1.9 Yes	10.0 Yes	0.0 Yes	630.0	1	34

Appendix F

Statewide Asset Data Exchange System (SADES)

Data Collection Specification Guide

Data Collection Specifications Guide

Pedestrian Infrastructure

Sidewalks
Curb-Ramps
Crosswalks

Partnership with

NH Department of Safety (NHDOS)
NH Department of Transportation (NHDOT)
NH Regional Planning Commissions (NHRPCs)
UNH Technology Transfer Center (UNH T^2)

Introduction

This document was established to outline assessment standards for specified base-inventory and asset condition collection criteria for pedestrian infrastructure assets within the state of New Hampshire as part of New Hampshire's Statewide Asset Data Exchange System (SADES).

All specifications and asset attributes contained herein were initially developed by the project working group and personnel from the Technology Transfer Center (T^2) at the University of New Hampshire (UNH). Agreed upon attributes and specifications were then reviewed by the New Hampshire Department of Safety (NHDOS), the New Hampshire Department of Transportation (NHDOT), and all nine (9) of the state's Regional Planning Commissions (RPCs). After a thorough review by all stake-holders, a consensus was reached regarding core attributes to be collected during the Statewide Asset Data Exchange System (SADES) field operations, as well as methods for assessment of asset conditions. This document presents agreed upon collection attributes and condition assessment criteria which is vetted by all project stake-holders and the SADES working group.

As part of the SADES initiative, all collected data will be compiled into an accessible statewide composite map for use by authorized public organizations. The data will undergo rigorous quality assurance and control (QA/QC) measures designed to ensure consistency across all agencies performing collection activities. This data will then be prepared for redistribution to interested parties through three outlets: a web application, a web mapping service, and a direct download portal. The initial data compilation, QA/QC, and redistribution will be completed by UNH T^2, and all data collection efforts will be organized by each RPC for their respective service areas. UNH T^2 currently manages an equipment loan program for use by any of the aforementioned project partners that require access to Global Positioning System (GPS) enabled field data collection equipment. Lastly, this collection equipment, and associated equipment loan program is available only through T^2 to stake-holding parties on a first-come-first-served reservation basis.

TABLE OF CONTENTS

Sidewalks

DATA COLLECTION SPECIFICATIONS GUIDE 1

GENERAL USER INFORMATION 5

NETWORK ATTRIBUTES 6

Assessment Date: 6
Collector Name(s) & Organization 6
Town Name 6
Road Name 6
Side of Street 6
Maintainence Entity 6
Update/Reconstruction Date 7
Surface Material 7
Sidewalk Condition 8
Surface Defects 9
Curb Type 9
Curb Condition 9
Gutter Pan Present 10
Minimum Curb Depth (in) 10
Existence of Buffer 10
Obstructions 11
Minimum Passable Width 11
Minimum Vertical Clearance 11
Changes in Vertical Profile 11
Comments 11

PROJECT ATTRIBUTES 12

Grates/Gap spacing size Inches? 12
Maximum Grade % 12
Greatest Cross Slope % 12
Number of Curb Cuts in Section 12

UPDATES AND REVIEW 12

Reassessment Date 12
Update Observer/Organization 12
Update Comments 12
Review Status 13
Local Review Completion Date 13
T2 Review Completion Date 13

SIDEWALKS - BIBLIOGRAPHY 13

APPENDIX 1: SIDEWALK FIELD PARAMETERS 13

APPENDIX 2: SIDEWALK DOMAIN LIST 14

Curb Ramps

NETWORK ATTRIBUTES 15

Assessment Date: 15
Collector Name(s) & Organization 15
Town Name 15
Road Name 15
Ramp Type 15
Material 16
Curb Ramp Condition 16
Crosswalk Exists 16
Are conditions on and off the curb ramp flush and free of abrupt level changes? 17
Does curb ramp have detectable warnings? 17
Can ramp be blocked by legally parked cars? 17
Does curb ramp have flared sides 17
If no flared sides, is there something that discourages pedestrians from traveling across ramp? 17
Is ramp outside the path of cars? 17
Is ramp of curb ramp contained in markings? 18
If corner-type, is bottom landing at least 48" long and contained in crosswalk? 18
Comments 18

PROJECT ATTRIBUTES .....

*Is ramp of curb-ramp at least 36" wide? 18
*Ramp Running Slope 18
*Cross Slope 19
*Gutter Slope 19
*Sidewalk width at "top" of curb ramp 18

UPDATES AND REVIEW 19

Reassessment Date 19
Update Observer & Organization 19
Update Comments 19
Review Status 19
Local Review Completion Date 19
T2 Review Completion Date 19

CURB RAMP - BIBLIOGRAPHY 20

APPENDIX 3: CURB RAMPS FIELD PARAMETERS 20

APPENDIX 4: CURB RAMPS DOMAIN LIST 21

Crosswalks

NETWORK ATTRIBUTES ***22***

Assessment Date: 22
Collector Name(s) & Organization 22
Line Type 22
Material 22
Paint Type 22
Paint Faded 22
Is a Median/Pedestrian Refuge area present? 22
Are Raised Speed Humps Present? 23
Are Lighting Utilities Present? 23
Are Pedestrian Crossing Signs or Actuated Utilities Present 23
Comments? 23

PROJECT ATTRIBUTES ***23***

***Width** 23
***Cross Slope** 23
***Running Slope** 23

UPDATES AND REVIEW ***23***

Reassessment Date 23
Update Observer & Organization 23
Update Comments 23
Review Status 23
Local Review Completion Date 24
T2 Review Conmpletion Date 24

CROSSWALKS - BIBLIOGRAPHY ***24***

APPENDIX 5: CROSSWALKS FIELD PARAMETERS ***24***
APPENDIX 6: CROSSWALKS DOMAIN LIST ***24***

****Denotes a Project Level Data Attribute***

General User Information

It is recommended that data be collected using the ESRI Collector Application for the Apple iPad.

Additional recommended equipment for conducting the assessment includes:
Tape Measure
Digital Level
Reflective Vest

A file geodatabase was set up with the following parameters.
Coordinate system: NAD 1983 State Plane New Hampshire FIPS 2800 (US Feet)
XY Tolerance 0.00328 US Feet
Appendix 1: Field Parameters
Appendix 2: Domain List

If you have questions or concerns about this iPad application or the SADES Culvert collection program, please contact the UNH Technology Transfer Center.

Contact Information:

Chris Dowd
SADES Manager
nht2gis@icloud.com
Cell: (603) 397-7745

Sidewalk - Network Attributes

Assessment Date
User Input Date

Record the date when the sidewalk assessment is performed

Collector Name(s) & Organization
User Input Text (max 50 characters)

Name of person collecting the data and his/her organization

Town/City Name
User Input Text (max 50 characters)

Record the Town in which the sidewalk is located

Road Name
User Input Text (max 50 characters)

Record the full road name for the sidewalk

Side of Street
North
South
East
West
North-East
North-West
South-East
South-West

Record the side of the street on which the sidewalk is located

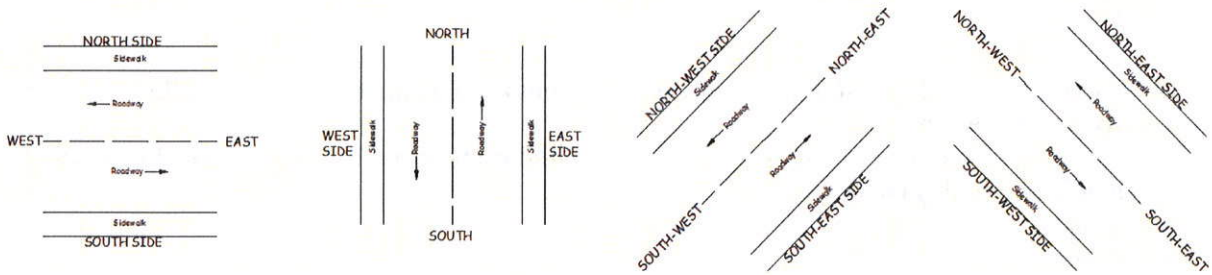

Maintained by
Town/City
County
NH DOT
Private
Other
Unknown (default)

Record the entity that maintains the sidewalk

Repair/Reconstruction Date
User Input Date

Record the date of the last known major update/reconstruction

Surface Material
Asphalt
Stamped Asphalt
Brick
Concrete
Stamped Concrete
Pervious
Unpaved
Other

Required for ADA Compliance - Record the most predominant material in the sidewalk section

- Asphalt
- Stamped Asphalt – a stamped template into asphalt. May include a colored polymer coating.

Figure 1: Stamped Asphalt Sidewalk (http://www.patternpaving.com)

- Brick
- Concrete
- Stamped Concrete – a stamped template into concrete. Can have a variety of different finishes, styles and designs.
- Pervious – a mixture of course aggregate, Portland cement and little to no sand. Results in highly permeably concrete.
- Unpaved
- Other

Sidewalk Condition
Good
Fair
Poor
None

Record the condition of the sidewalk material

- Good - No distress found, no vertical displacements

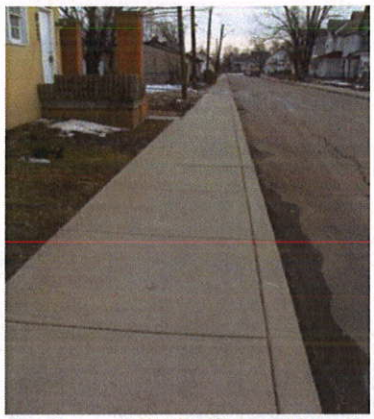

Figure 2: Example of a good sidewalk condition (www.mfcna.org)

- Fair - Narrow Sidewalk Cracks and sidewalk displacements less than 1/2 " are present

Figure 3: Example of fair sidewalk condition (www.mfcna.org)

- Poor - Sidewalk Cracks or large vertical displacements greater than 1/2" are present.

Figure 4: Example of Poor Sidewalk Condition (www.mfcna.org)

Surface Defects
Yes
No

Surface defects such as missing portions or uneven patches are visible

Figure 5: Examples of surface defects (www.mfcna.org)

Curb Type
Asphalt
Concrete
Granite
Other
None

Record the predominate material of which the curb is constructed

Curb Condition
Good
Fair
Poor
None

Record the condition of the curb material

- Good - No distress found
- Fair – low number of faults, minimal heaves and cracks on the curb

Figure 6: Examples of curb in fair condition (www.mfcna.org)

- Poor – High number of faults, large heaves or cracks on the curb, or curb face loss due to asphalt overlay

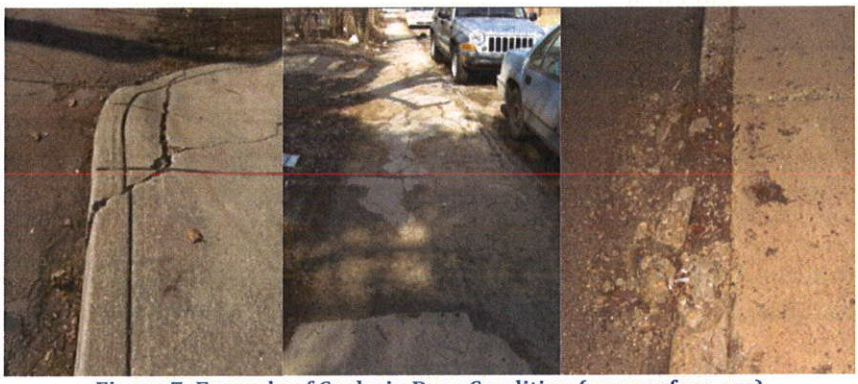

Figure 7: Example of Curbs in Poor Condition (www.mfcna.org)

Gutter Pan Present
Yes
No

Denote if a gutter pan is present on this sidewalk section

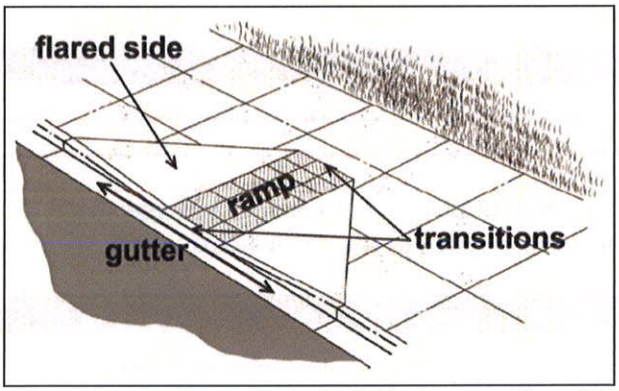

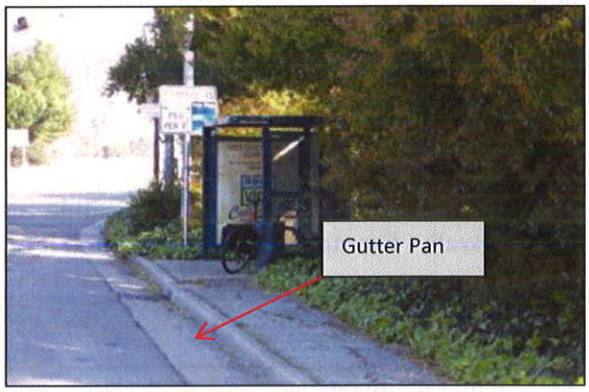

Figure 8: Diagram of gutter pan (http://www.ada.gov/pcatoolkit/chap6toolkit.htm)

Minimum Curb Depth (in)
User Input Number

Input the minimum curb depth on this sidewalk section

Existence of Buffer
Grass Strip
Bicycle Lane
Parking Spaces
Street Furniture
None
Other

Determine if a buffer exists that separates the sidewalk from the closest lane of moving vehicles

- Grass Strip: Planting Strip of grass and trees
- Street Furniture: Includes benches, newspaper boxes, street lighting and permanent public art

Obstructions
None
Movable Objects
Water
Vegetation
Drain
Fixed Object
Fixed Sign
Hydrant
Tree Trunk
Utility Pole

Required for ADA Compliance - Identify if any obstructions exist on the path of the sidewalk that limit the vertical passage space, protrude into the circulation route, or reduce the clearance width of the sidewalk

Minimum Passable Width
Greater than 60 inches
36 inches to 60 inches
Less than 36 inches

Required for ADA Compliance - Identify the measurement for the narrowest portion of the sidewalk section

Minimum Vertical Clearance
Unlimited
Greater than 80 inches
Less than 80 inches

Required for ADA Compliance - Determine the minimum unobstructed vertical passage space along the sidewalk - Examples of items that limit it may include overhangs, tree branches or signs

Changes in Profile
Level
Less than 0.25 inches
0.25 inches to 0.50 inches
Greater than 0.50 inches

Required for ADA Compliance - Identify the largest change in level on the sidewalk section. Changes in level are defined as the vertical height transitions between adjacent surfaces or along the surface of the path. Examples include buckled bricks, cracks, and curbs without ramps or drainage grates, areas of heaving/settlement, presence of railroad tracks, roots, steps, and/or tree grates

Comments
User Input Text

Note any additional information or items that were not covered by the assessment

Sidewalk - Project Attributes

Does Grate or Gap spacing exceed 0.5 inches?
Yes
No

Required for ADA Compliance - A grate is a structure comprised of bars that prevent large objects from falling though while permitting water and small debris access. A gap is a single channel embedded in a surface - such as when railroad tracks are embedded into the road surface

*Maximum Grade %
User Input Number

Required for ADA Compliance - Identify the maximum grade in the sidewalk section. Grade is defined as the slope parallel to the direction of travel

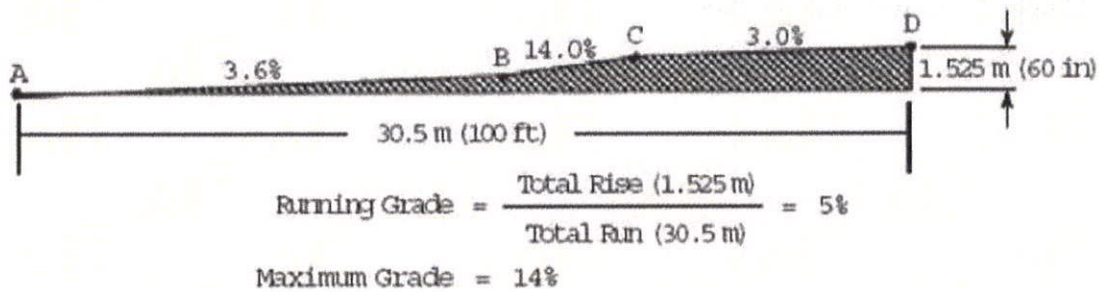

Figure 9: Sidewalk Grade (www.fhwa.dot.gov)

*Greatest Cross Slope
User Input Number

Required for ADA Compliance - Identify the greatest cross slope. Cross slope is the slope measured perpendicular to the direction of travel. Most sidewalks have some degree of cross slope to allow the water to drain to the street

*Number of Curb Cuts
User Input Number

Identify the number of curb cuts in the sidewalk sections

Sidewalks - Updates and Review

Update Date
User Input Date

Input the date that the updated assessment was completed

Update Observer/Organization
User Input (max 50 characters)

Name of observer(s)/organization collecting updated data - This is important so that if questions arise about the data collected at a crossing, the assessor may be contacted

Update Comments
User Input Text

If anything important is noticed that is not covered through the original assessment, notes should be taken in this field

Review Status
New (Default)
Local Review in Process
Local Review Complete
T2 Review in Process
T2 Review Complete

Denotes the current local and UNH T^2 review status for collected sidewalk data

Local Review Completion Date
User Input Date

Input date the local review is completed

T2 Review Completion Date
User Input Date

Input date the T2 review is completed

Curb Ramps - Network Attributes

Assessment Date
User Input Date

Record the date when the Curb Ramp assessment is performed - This is a required field

Collector Name(s) & Organization
User Input Text (max 50 characters)

Name and organization of person collection the data – This is a required field

Town/City Name
Name of Community

Record the town in which the curb ramp is located

Road Name
Name of Community

Record the Road on which the curb ramp is located

Ramp Type
Perpendicular
Parallel
Diagonal
Combined
Other

Record the type of Curb Ramp being collected - All illustrations from www.fhwa.dot.gov

Perpendicular Curb Ramp

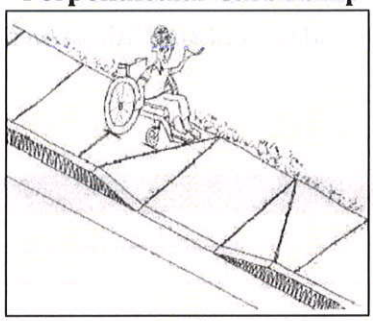

Diagonal Curb Ramp

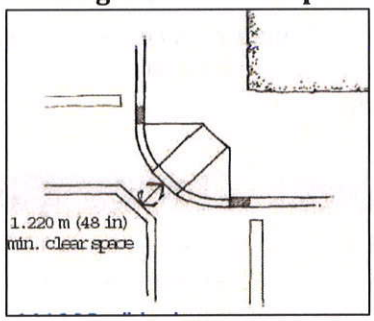

Parallel Curb Ramp

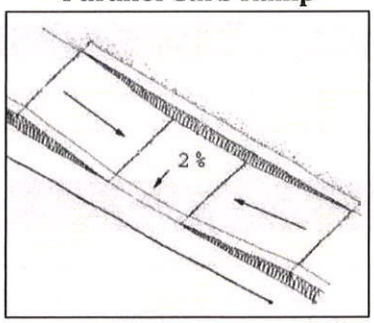

Combined Curb Ramp

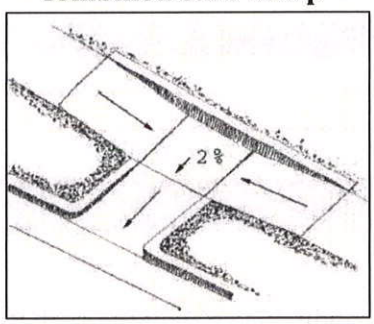

Material
Asphalt
Stamped Asphalt
Brick
Concrete
Stamped Concrete
Pervious
Other

Required for ADA Compliance - Record the most predominant material in the curb-ramp section

- Asphalt
- Stamped Asphalt – a stamped template into asphalt. May include a colored polymer coating.
- Brick
- Concrete
- Stamped Concrete – a stamped template into concrete. Can have a variety of different finishes, styles and designs

Figure 9: Stamped Asphalt Sidewalk (http://www.patternpaving.com)

- Pervious – a mixture of course aggregate, Portland cement and little to no sand. Results in an highly permeably concrete.
- Unpaved
- Other

Curb Ramp Condition
Good
Fair
Poor
None

Record condition of the Curb Ramp material

Crosswalk Exists
Yes
No

Identify whether or not a crosswalk exists

Are Conditions On/Off Ramp Flush and Free from Abrupt Level Changes?
Yes
No

Identify if the Conditions on & off the Curb Ramp are Free of Level Changes

Does Curb have Detectable Warnings?
Yes
No

Identify if the Curb Ramp contains detectable warning devices (i.e. Detectable Warning Pavers/Tiles etc.)

Figure 10: Detectable Warning Pavers & Tiles (http://www.detectable-warning.com/guidelines.shtml)

Is Ramp Blocked by Legally Parked Cars?
Yes
No

Determine if the Curb Ramp is at all blocked by legally parked cars

Does the Ramp have Flared Sides?
Yes
No

Determine if the Curb Ramp has flared sides

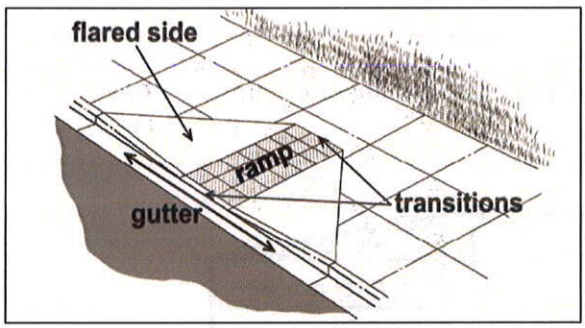

If no Flared Sides, do other Conditions Discourage Use?
Yes
No
N/A

Determine if any other conditions exist that would make using the ramp difficult

If up to Curb, is ramp outside the path of cars?
Yes
No
N/A

Determine if the ramp is outside the path of vehicles

Is the ramp of the curb ramp contained in markings?
Yes
No
N/A

Determine if the Curb Ramp is contained within painted markings

If corner-type, is bottom landing at least 48"long & contained in Crosswalk?
Yes
No
N/A

Determine if the bottom landing of a corner-type Curb Ramp is at least 48" long and contained in the crosswalk

Comments
User Input Text (max 50 characters)

Curb Ramps – Project Attributes

*Is Ramp of curb ramp at least 36" wide?
Yes
No

Required for ADA Compliance - Identify if the Ramp of the Curb Ramp is at least 36" in width

*What is the Ramp Running Slope?
Less than 8.33 Percent
8.33 Percent to 10 Percent
10 Percent to 12.5 Percent
Greater than 12.5 Percent

Required for ADA Compliance - Identify the ramp running slope

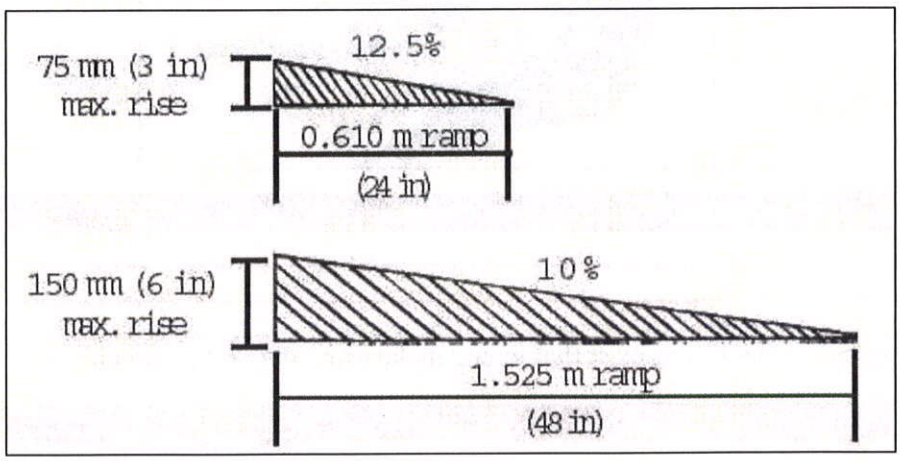

*What is the Ramp Cross Slope?
Less than or Equal to 2 Percent
Greater than 2 Percent

Required for ADA Compliance - Identify the ramp cross slope

*What is the Gutter Slope?
Less than or Equal to 5 Percent
Greater than 5 Percent

Required for ADA Compliance – Identify the Gutter Slope

*What is the Sidewalks Width at the top of the Ramp?
Less than 36 inches
36 inches to 48 inches
Greater than 48 inches

Identify the width of the sidewalk at the top of the Ramp

Curb Ramps - Updates and Review

Update Date
User Input Date

Input the date that the updated assessment was completed

Update Observer/Organization
User Input (max 50 characters)

Name of observer(s)/organization collecting updated data - This is important so that if questions arise about the data collected at a structure, the assessor may be contacted

Update Comments
User Input Text

If anything important is noticed that is not covered through the original assessment, notes should be taken in this field

Review Status
New (Default)
Local Review In Process
Local Review Complete
T2 Review In Process
T2 Review Complete

If anything important is noticed that is not covered through the original assessment, notes should be taken in this field

Local Review Completion Date
User Input Date

Input date the local review is completed

T2 Review Completion Date
User Input Date

Input date the T2 review is completed

Crosswalks - Network Attributes

Assessment Date
User Input Date

Record the date when the sidewalk assessment is performed. This is a required field.

Collector Name(s) & Organization
User Input Text (max 50 characters)

Name and organization of person collection the data. This is a required field.

Line Type
Hatched
Parallel
Parallel filled
Textured

Record the line type within the crosswalk

Material
Asphalt
Stamped Asphalt
Brick
Concrete
Stamped Concrete
Pervious
Other

Record the material of crosswalk

Paint Type
Retroreflective
Raised
Flat
None

Record material of crosswalk

Is the Crosswalk Paint Faded?
Yes
No

Identify if the paint is faded.

Is a Median/Pedestrian Refuge Area Present
Yes
No

Identify if there is a median or pedestrian refuge in the crosswalk.

Are Raised Speed Humps Present?
Yes
No

Identify if there is a speed hump present

Are Lighting Utilities Present?
Yes
No

Identify if crosswalk is lighted

Are Pedestrian Crossing Signs or Pedestrian Actuated Utilities Present?
Yes
No

Identify if pedestrian crossing signs or pedestrian actuated controls are present

Comments
User Input Text

Crosswalks - Project Attributes

* Width (Feet & Inches)
User Inputted Number

Identify the width of the crosswalk

* Cross Slope
User Inputted Number

Identify the maximum crosslope of the crosswalk – Perpendicular to the direction of travel

* Running Slope
User Inputted Number

Identify the maximum running slope of the crosswalk – Parallel to the direction of travel

Updates and Review

Reassessment Date
User Input Date

Input the date that the updated assessment was completed

Update Observer/Organization
User Input (max 50 characters)

Name of observer(s)/organization collecting updated data - This is important so that if questions arise about the data collected at a crossing, the assessor may be contacted

Update Comments
User Input Text

If anything important is noticed that is not covered through the original assessment, notes should be taken in this field

Review Status
New (Default)
Local Review In Process
Local Review Complete
T2 Review In Process
T2 Review Complete

Status of local and T2 review is to be noted in this section

Local Review Completion Date
User Input Date

Input date the local review is completed

T2 Review Completion Date
User Input Date

Input date the T2 review is completed

Photograph Guide (Optional)

The photography section of the Pedestrian Infrastructure Protocol document was established to outline the method for the optional collection of Sidewalk, Curb-Ramp, and Crosswalk photographs.

The SADES working group, and program users, have concluded that not all pedestrian assets and associated conditions included with this program require the collection of photographs. However, certain structures, field locations, and asset conditions are more easily examined and assessed using imagery collected in the field. Therefore, a Pedestrian Infrastructure Picture feature service has been established to provide field technicians with the ability to deliver asset photographs when deemed appropriate.

Sidewalks
1-Attachment
2-Attachment
3-Attachment

The following photo views are preferred:

- View of sidewalk section (direction of travel at time of collection)
- View of sidewalk deformity #1 (if needed)
- View of sidewalk deformity #2 (if needed)

Curb Ramps
1-Attachment
2-Attachment
3-Attachment

The following photo views are preferred:

- View of curb-ramp
- View of curb-ramp deformity #1 (if needed)
- View of curb-ramp deformity #2 (if needed)

Crosswalks
1-Attachment
2-Attachment
3-Attachment

The following photo views are preferred:

- View of crosswalk (direction of travel at time of collection)
- View of crosswalk deformity #1 (if needed)
- View of crosswalk deformity #2 (if needed)

Sidewalks - Bibliography

Designing Sidewalks and Trails for Access. (2014, June). Retrieved from Federal Highway Administration: http://www.fhwa.dot.gov/environment/bicycle_pedestrian/publications/sidewalks

APPENDIX 1: SIDEWALKS - FIELD PARAMETERS

Field Name	Data Type	Alias	Null	Domain	Char Max Length	Default
ASSE_DATE	Date	Assessment Date	Y			
Observers	Text	Collector Name(s) & Organization	Y		50	
Town	Text	Town Name	Y		50	
Road_Name	Text	Road Name	Y		50	
Side_of_Street	Text	Side of Street	Y	Side_of_Street		
Maintained_by	Text	Maintenance Entity	Y	Maintained_by		UNK
Update_Reconstruction_Date	Date	Update or Reconstruction Date	Y			
Material	Text	Structure Material	Y	Material		
Sidewalk_Condition	Text	Sidewalk Condition	Y	Condition		
Surface_Defects	Text	Existence of Surface Defects	Y	Yes_No		
Curb_Type	Text	Curb Type	Y	Curb_Type		
Curb_Condition	Text	Curb Condition	Y	Condition		
Gutter_Pan_Present?	Text	Is Gutter Pan Present?	Y	Yes_No		
Minimum_Curb_Depth	Long Integer	Minimum Curb Depth	Y			
Existence_of_Buffer	Text	Existence of Buffer	Y	Existence_of Buffer		
Obstructions	Text	Obstructions	Y	Obstructions		
Minimum_Passable_Width	Text	Minimum Passable Width	Y	Minimum Passable_Width		
Minimum_Vertical_Clearance	Text	Minimum Vertical Clearance	Y	Minimum Vertical_Width		
Changes_in_Level	Text	Changes in Level	Y	Change_in Level		
Does_Grate_Gap_Spacing Exceed_0.5in?	Text	Does Grate/Gap Spacing Exceed 0.5 inches?	Y	Yes_No		
Maximum_Grade_Percentage*	Long Integer	Maximum Grade Percentage	Y			
Greatest_Cross_Slope*	Long Integer	Greatest Cross Slope	Y	Cross_Slope		
Number_of_Curb_Cuts*	Long Integer	Number of Curb Cuts	Y			
Reassessment_Date*	Date	Reassessment Date	Y			
Update_Observers Organizations*	Text	Update Observers & Organization	Y		50	
Update_Comments*	Text	Update Comments	Y		50	
Review	Text	Review Status	Y	Review		New
Local_Review_Date	Date	Local Review Date	Y			
T2_Review_Date	Date	T2 Review Date	Y			

APPENDIX 2: SIDEWALKS - DOMAIN LIST

EXISTENCE_OF_BUFFER	MIN_VERT_CLEARANCE	SIDEWALK_CONDITION	CURB_TYPE
Grass Strip	Unlimited	Good	Asphalt
Bicycle Lane	Greater than 80 inches	Fair	Concrete
Parking Spaces	Less than 80 inches	Poor	Granite
Street Furniture		None	Other
Other			None

CHANGE_IN_LEVEL	MAINTAINED_BY	MATERIAL	OBSTRUCTIONS
Level	Town	Asphalt	None
Less than 0.25 inches	County	Stamped Asphalt	Movable Objects
0.25 inches to 0.50 inches	NH DOT	Brick	Water
Greater than 0.50 inches	Other	Concrete	Vegetation
	Unknown (default)	Stamped Concrete	Drain
		Pervious	Fixed Object
		Unpaved	Fixed Sign
		Other	Hydrant
			Tree Trunk
			Utility Pole

REVIEW	SIDE_OF_STREET	MIN_VERT_CLEARANCE	MIN_PASSABLE_WIDTH
New (Default)	North	Unlimited	Greater than 60 inches
Local Review In Process	South	Greater than 80 inches	36 inches to 60 inches
Local Review Complete	East	Less than 80 inches	Less than 36 inches
T2 Review In Process	West		
T2 Review Complete	North-East		
	North-West		
	South-East		
	South-West		

YES_NO
Yes
No

Bibliography

Designing Sidewalks and Trails for Access. (2014, June). Retrieved from Federal Highway Administration:http://www.fhwa.dot.gov/environment/bicycle_pedestrian/publications/sidewalks

APPENDIX 3: FIELD PARAMETERS

Field Name	Data Type	Alias	Null	Domain	Max Length	Default
SADES_ID	Text	SADES ID	Y		50	
ASSES_DATE	Date	Assessment Date	Y			
Observers	Text	Collector Name(s) & Organization	Y		50	
Town	Text	Town	Y		50	
Ramp_Type	Text	Ramp Type	Y	Ramp_Type		
Material	Text	Material	Y	Material		
Curb_Ramp_Condition	Text	Curb Ramp Condition	Y	Condition		
Cross_Walk_Exists	Text	Crosswalk Exists	Y	Yes_No		
Cond_on_off_ramp_free_of_Level Changes	Text	Are conditions on/off ramp free of Level Changes?	Y	Changes_In_Level		
Does_Curb_have_Detectable Warnings	Text	Does Curb have Detectable Warnings	Y	Yes_No		
Is_Ramp_Blocked_by_Legally Parked_Cars	Text	Is Ramp Blocked by Legally Parked Cars?	Y	Yes_No		
Does_Ramp_Have_Flared Sides	Text	Does Ramp have Flared Sides?	Y	Yes_No		
Other_Conditions_Discouraging_ Ped_Use	Text	If no Flared Sides, do other conditions exist which discourage use?	Y	Yes, No or NA		
Outside_Path_of_Cars	Text	If up to the curb, is ramp outside the path of cars?	Y	Yes, No or NA		
Is_Ramp_of_CurbRamp contained_in_Markings	Text	Is ramp contained in markings?	Y	Yes, No or NA		
CornerType_bottom48"_Long contained_in_xwalk	Text	If corner-type, is landing at least 48" long & contained in crosswalk?	Y	Yes, No or NA		
COMMENTS	Text	Comments?	Y		50	

*IS_RAMP_AT_LEAST_36"WIDE?	Text	*Is ramp of curb ramp at least 36 wide?	Y	Yes_No		
*RAMP_RUNNING_SLOPE	Text	*What is the Ramp Running Slope?	Y	Ramp_Running Slope		
*RAMP_CROSS_SLOPE	Text	*What is the Ramp Cross Slope?	Y	Cross_Slope		
*GUTTER_SLOPE	Text	What is the Ramp Gutter Slope?	Y	Gutter_Slope		
*SIDEWALK_WIDTH_TOP OF_RAMP	Text	What is the Sidewalk Width at the top of the Ramp?	Y	Sidewalk_Width Top_Ramp		
UPDATE_DATE	Date	Reassessment Date?	Y			
UPDATE_OBSERVER ORGANIZATION	Text	Update Observer & Organization	Y		50	
UPDATE_COMMENT	Text	Update Comments	Y		50	
REVIEW	Text	Review	Y	Review		
LOCAL_REVIEW_DATE	Date	Local Review Completion Date	Y			
T2_DATE	Date	T2 Review Completion Date	Y			

APPENDIX 4: CURB RAMP DOMAIN LIST

RAMP_TYPE	CONDITION	GUTTER_SLOPE	CROSS_SLOPE
Perpendicular	Good	Less than or Equal to 5 Percent	Less than or Equal to 2 Percent
Parallel	Fair	Greater than 5 Percent	Greater than 2 Percent
Diagonal	Poor	**YES_NO**	
Combined	None	Yes	
Other		No	

RAMP_RUNNING_SLOPE	SIDEWALK_WIDTH TOP_OF_RAMP	REVIEW	MATERIAL
Less than 8.33 Percent	Less than 36 Inches	Local Review in Process	Asphalt
8.33 Percent to 10 Percent	36 Inches to 48 Inches	Local Review Complete	Stamped Asphalt
10 Percent to 12.5 Percent	Greater than 48 Inches	T2 Review in Process	Brick
Greater than 12.5 Percent		T2 Review Complete	Concrete
			Stamped concrete
			Pervious
			Unpaved
			Other

YES_NO_NA
Yes
No
Na

Bibliography

(2014, August 19). Retrieved from American with Disabilites Act: www.ada.gov

Designing Sidewalks and Trails for Access. (2014, June). Retrieved from Federal Highway Administration:http://www.fhwa.dot.gov/environment/bicycle_pedestrian/publications/sidewalks

APPENDIX 5: FIELD PARAMETERS

Field Name	Data Type	Alias	Null	Domain	Max Length	Default
SADES_ID	Text	SADES ID	Y			
ASSE_DATE	Text	Date	Y			
OBSERVERS	Text	Collector Name(s) & Organization	Y		50	
TOWN	Text	Town	Y			
LINE_TYPE	Text	Line Type	Y	Line_Type		
MATERIAL	Text	Material	Y	Material		
PAINT_FADED	Text	Is Paint Faded?	Y	Yes_No		
MEDIAN_PED REFUGE_PRESENT?	Text	Is a Median or Pedestrian Refuge Present?	Y	Yes_No		
RAISED_SPEED HUMP_PRESENT?	Text	Are Raised Speed Humps Present?	Y	Yes_No		
LIGHTING_PRESENT?	Text	Are Lighting Utilities Present?	Y	Yes_No		
SIGNS_PED_UTILITIES PRESENT?		Are Pedestrian Crossing Signs or Actuated Utilities Present?	Y	Yes_No		
COMMENTS	Text	Comments	Y		50	
WIDTH	Text	Width	Y			
CROSS _SLOPE	Text	Cross Slope	Y	Cross_Slope		
RUNNING_SLOPE	Text	Running Slope	Y	Ramp_running Slope		
UPDATE_DATE	Date	Reassessment Date	Y			
UPDATE_OBSERVER ORGANIZATION	Text	Update Observer/Org	Y		50	
UPDATE_COMMENT	Text	Update Comment	Y		50	
REVIEW	Text	Review Status	Y			
LOCL_REVIEW_DATE	Date	Local Review Date	Y			
T2_REVIEW_DATE	Date	T2 Review Date	Y			

APPENDIX 6: DOMAIN LIST

LINE TYPE	MATERIAL	Yes or No	Cross Slope
Hatched	Asphalt	Yes	Less than or Equal to 2 Percent
Parallel	Stamped Asphalt	No	Greater than 2

			Percent
Parallel Filled	Brick		
Textured	Concrete		
	Stamped Concrete		
	Pervious		
	Unpaved		
	Other		

Ramp Running Slope
Less than 8.33 Percent
8.33 Percent to 10 Percent
10 Percent to 12.5 Percent
Greater than 12.5 Percent

Sidewalk & Curb Ramp ADA Criteria

Total = [(Attribute Rating)*(ADA Rating +(Speed/Ease of fix))]*(Importance)

Sidewalks

Surface Material	Attribute Rating (1-5)	ADA Rating (0-5)	Speed/Ease of fix (1-5)	Total
Asphalt		0	0	0
Stamped Asphalt		2	0	8
Brick	4	3	0	12
Concrete		1	0	4
Other		5	0	20

Sidewalk Conditon	Attribute Rating (1-5)	ADA Rating (0-5)	Speed/Ease of fix (1-5)	Total
Good		0	0	0
Fair	5	2	0	10
Poor		5	0	25
N/A		0	0	0

Surface Defects	Attribute Rating (1-5)	ADA Rating (0-5)	Speed/Ease of fix (1-5)	Total
Yes	5	5	0	25
No		0	0	0

Curb Type	Attribute Rating (1-5)	ADA Rating (0-5)	Speed/Ease of fix (1-5)	Total
Asphalt		0	0	0
Concrete		0	0	0
Granite	1	0	0	0
Other		0	0	0
None		0	0	0

Curb Conditon	Attribute Rating (1-5)	ADA Rating (0-5)	Speed/Ease of fix (1-5)	Total
Good		0	0	0
Fair	1	0	0	0
Poor		0	0	0
N/A		0	0	0

Obstructions	Attribute Rating (1-5)	ADA Rating (0-5)	Speed/Ease of fix (1-5)	Total
None		0	0	0
Moveable Objects		1	0	4
Water		1	0	4
Vegetation		4	0	16
Drain	4	4	0	16
Fixed Object		5	0	20
Fixed Sign		5	0	20
Hydrant		5	0	20
Tree Trunk		5	0	20
Utility Pole		5	0	20

Minimum Passable Width	Attribute Rating (1-5)	ADA Rating (0-5)	Speed/Ease of fix (1-5)	Total
Greater than 60 inches		0	0	0
36 inches to 60 inches	5	2	0	10
less than 36 inches		5	0	25

Minimum Vertical Clearance	Attribute Rating (1-5)	ADA Rating (0-5)	Speed/Ease of fix (1-5)	Total
Unlimited		0	0	0
Greater than 80 inches	3	1	0	3
Less than 80in		4	0	12

Changes in Profile	Attribute Rating (1-5)	ADA Rating (0-5)	Speed/Ease of fix (1-5)	Total

Rating Categories

Attribute Categories	
Rating 1	Attribute has a low impact to ADA compliance
Rating 2	
Rating 3	
Rating 4	
Rating 5	Attribute highly impacts ADA compliance

Importance Categories	
Rating 1	Low importance region/ rural area/ low pedestrian volume
Rating 2	
Rating 3	high importance region/ city area/ high pedestrian traffic

Speed/Ease of fix Category	
Rating 1	ADA correction can be made quickly with relitively little effort/money
Rating 2	
Rating 3	
Rating 4	
Rating 5	ADA correction requires larger scale reconstruction to meet compliance

ADA Rating Categories	
Rating 0	No ADA impedance
Rating 1	
Rating 2	
Rating 3	
Rating 4	
Rating 5	Major ADA impedance

Level	4	0	0	0
Less than 0.25 inches		1	0	4
0.25 inches to 0.50 inches		2	0	8
Greater than 0.50 inches		5	0	20

Does Grate/Gap spacing exceed 0.5 in?	Attribute Rating (1-5)	ADA Rating (0-5)	Speed/Ease of fix (1-5)	Total
Yes	4	5	0	20
No		0	0	0

Maximum Grade %	Attribute Rating (1-5)	ADA Rating (0-5)	Speed/Ease of fix (1-5)	Total
Grade less than 8.33%	5	0	0	0
Grade more than 8.33%		5	0	25

Greatest Cross Slope	Attribute Rating (1-5)	ADA Rating (0-5)	Speed/Ease of fix (1-5)	Total
Greater than 2%	2	5	0	10
Less than or equal to 2%		0	0	0

Curb Ramps

Ramp Type	Attribute Rating (1-5)	ADA Rating (0-5)	Speed/Ease of fix (1-5)	Total
Perpendicular	1	0	0	0
Parallel		0	0	0
Diagonal		0	0	0
Combined		0	0	0
Other		0	0	0

Surface Material	Attribute Rating (1-5)	ADA Rating (0-5)	Speed/Ease of fix (1-5)	Total
Asphalt	4	0	0	0
Stamped Asphalt		2	0	8
Brick		3	0	12
Concrete		1	0	4
Other		5	0	20

Curb Ramp Conditon	Attribute Rating (1-5)	ADA Rating (0-5)	Speed/Ease of fix (1-5)	Total
Good	5	0	0	0
Fair		2	0	10
Poor		5	0	25
N/A		0	0	0

Crosswalk Exists	Attribute Rating (1-5)	ADA Rating (0-5)	Speed/Ease of fix (1-5)	Total
Yes	3	0	0	0
No		4	0	12

Conditions on/off ramp flush?	Attribute Rating (1-5)	ADA Rating (0-5)	Speed/Ease of fix (1-5)	Total
Yes	4	0	0	0
No		5	0	20

Does curb have Detectable Warnings?	Attribute Rating (1-5)	ADA Rating (0-5)	Speed/Ease of fix (1-5)	Total
Yes	5	0	0	0
No		5	0	25

Is ramp blocked by legally parked cars?	Attribute Rating (1-5)	ADA Rating (0-5)	Speed/Ease of fix (1-5)	Total
Yes	5	5	0	25
No		0	0	0

Does the ramp have flared sides?	Attribute Rating (1-5)	ADA Rating (0-5)	Speed/Ease of fix (1-5)	Total
Yes	1	3	0	3
No		0	0	0

Other conditions, use discouraged?	Attribute Rating (1-5)	ADA Rating (0-5)	Speed/Ease of fix (1-5)	Total

Yes		5	0	20
No	4	0	0	0
NA		0	0	0

Ramp outside of vehicle path?	Attribute Rating (1-5)	ADA Rating (0-5)	Speed/Ease of fix (1-5)	Total
Yes		0	0	0
No	4	5	0	20
NA		0	0	0

Ramp within painted markings?	Attribute Rating (1-5)	ADA Rating (0-5)	Speed/Ease of fix (1-5)	Total
Yes		0	0	0
No	4	5	0	20
NA		0	0	0

Is bottom landing of corner type >= 48"	Attribute Rating (1-5)	ADA Rating (0-5)	Speed/Ease of fix (1-5)	Total
Yes		0	0	0
No	3	5	0	15
NA		0	0	0

At least 36" wide?	Attribute Rating (1-5)	ADA Rating (0-5)	Speed/Ease of fix (1-5)	Total
Yes	3	0	0	0
No		5	0	15

Ramp running slope	Attribute Rating (1-5)	ADA Rating (0-5)	Speed/Ease of fix (1-5)	Total
Less than 8.33%		0	0	0
8.33% to 10%	5	2	0	10
10% to 12.5%		3	0	15
Greater than 12.5%		5	0	25

Ramp Cross Slope	Attribute Rating (1-5)	ADA Rating (0-5)	Speed/Ease of fix (1-5)	Total
Less than or equal to 2%	2	0	0	0
greater than 2%		3	0	6

Sidewalk width at the top of ramp	Attribute Rating (1-5)	ADA Rating (0-5)	Speed/Ease of fix (1-5)	Total
Less than 36 inches		5	0	10
36 to 48 inches	2	2	0	4
Greater than 48 inches		0	0	0

Crosswalks

Line type	Attribute Rating (1-5)	ADA Rating (0-5)	Speed/Ease of fix (1-5)	Total
Hatched		0	0	0
Parallel	2	1	0	2
Parallel filled		1	0	2
Textured		2	0	4

Surface Material	Attribute Rating (1-5)	ADA Rating (0-5)	Speed/Ease of fix (1-5)	Total
Asphalt		0	0	0
Stamped Asphalt		2	0	4
Brick	2	3	0	6
Concrete		1	0	2
Other		5	0	10

Paint type	Attribute Rating (1-5)	ADA Rating (0-5)	Speed/Ease of fix (1-5)	Total
Retroreflective		0	0	0
Raised	2	1	0	2
Flat		1	0	2
None		1	0	2

Crosswalk paint faded	Attribute Rating (1-5)	ADA Rating (0-5)	Speed/Ease of fix (1-5)	Total
Yes	4	5	0	20
No		0	0	0

			0	
Cross Slope	Attribute Rating (1-5)	ADA Rating (0-5)	Speed/Ease of fix (1-5)	Total
greater than 2%	2	5	0	10
2% or less		0	0	0

Running Slope	Attribute Rating (1-5)	ADA Rating (0-5)	Speed/Ease of fix (1-5)	Total
greater than 5%	2	5	0	10
5% or less		0	0	0

Is a Median/Pedestrian Refuge Area Present	Attribute Rating (1-5)	ADA Rating (0-5)	Speed/Ease of fix (1-5)	Total
Yes	1	0	0	0
No		1	0	1

Are Raised Speed Humps Present	Attribute Rating (1-5)	ADA Rating (0-5)	Speed/Ease of fix (1-5)	Total
Yes	1	0	0	0
No		1	0	1

Are Lighting Utilities Present	Attribute Rating (1-5)	ADA Rating (0-5)	Speed/Ease of fix (1-5)	Total
Yes	1	0	0	0
No		1	0	1

Are Pedestrian Crossings/Ped Utilities Present	Attribute Rating (1-5)	ADA Rating (0-5)	Speed/Ease of fix (1-5)	Total
Yes	2	0	0	0
No		1	0	2

Width	Attribute Rating (1-5)	ADA Rating (0-5)	Speed/Ease of fix (1-5)	Total
Greater than 72"	5	0	0	0
Less than 72"		5	0	25

OBJECTID	Asset Date	Collector	Town Name	Road Name	Ramp Type	Surface Material	Ramp Condition	Crosswalk Present	Conditions Flush	Detectable Warnings	Ramp Blocked Legally	Flared Sides	Use Discouraged	Ramp Outside Veh	Within Painted	If Corner Type	36" wide	Running slope	Cross Slope	Sidewalk Width	Importance	Ranking	Normalized Ranking percentage
1619	8/28/2015	Sandt DOT	Jaffrey	Main Street	Parallel	Asphalt	Poor	No	No	No	No	No	Yes	Yes	No	NA	Yes	Greater than 12.5%	Less than or equal to 2%	Greater than 48 inches	1	147	0
158	7/2/2015	Sandt DOT	Manchester	Hanover Street	Diagonal	Concrete	Poor	No	No	No	No	No	Yes	Yes	No	No	Yes	Less than 8.33%	Less than or equal to 2%	Greater than 48 inches	1	141	4
160	7/2/2015	Sandt DOT	Manchester	Hanover Street	Parallel	Concrete	Poor	No	No	No	No	No	Yes	Yes	No	NA	Yes	Less than 8.33%	Less than or equal to 2%	Greater than 48 inches	1	126	14
2061	10/8/2015	Sandt DOT	Durham	Main Street	Parallel	Concrete	Poor	No	No	No	No	No	No	Yes	No	NA	Yes	8.33% to 10%	Greater than 2%	Greater than 48 inches	1	122	17
1309	7/23/2015	Sandt DOT	Derry	E Broadway	Parallel	Asphalt	Poor	Yes	No	No	No	No	Yes	Yes	Yes	Yes	Yes	Greater than 12.5%	Greater than 2%	Greater than 48 inches	1	121	18
277	7/13/2015	Sandt DOT	Nashua	Main Street	Diagonal	Concrete	Good	No	No	No	No	No	No	Yes	No	NA	Yes	Greater than 12.5%	Greater than 2%	36 to 48 inches	1	116	21
37	6/12/2015	Sandt DOT	Pembroke	Pembroke Road	Parallel	Asphalt	Poor	No	Yes	No	No	No	Yes	Yes	No	NA	Yes	8.33% to 10%	Less than or equal to 2%	36 to 48 inches	1	116	21
1396	7/31/2015	Sandt DOT	Sutton	89S rest area	Combined	Concrete	Poor	No	No	No	No	No	No	Yes	No	NA	Yes	Less than 8.33%	Less than or equal to 2%	Greater than 48 inches	1	106	28
1397	7/31/2015	Sandt DOT	Sutton	89S rest area	Combined	Concrete	Poor	No	No	No	No	No	No	Yes	No	NA	Yes	Less than 8.33%	Less than or equal to 2%	Greater than 48 inches	1	106	28
39	6/12/2015	Sandt DOT	Pembroke	Pembroke Road	Parallel	Asphalt	Poor	No	Yes	No	No	No	Yes	Yes	No	NA	Yes	Less than 8.33%	Less than or equal to 2%	36 to 48 inches	1	106	28
1569	8/19/2015	Sandt DOT	Peterborough	Main	Perpendicular	Concrete	Poor	Yes	No	No	No	No	No	Yes	Yes	NA	Yes	Greater than 12.5%	Greater than 2%	Greater than 48 inches	1	105	29
1409	7/31/2015	Sandt DOT	Henniker	Bridge Street	Perpendicular	Concrete	Poor	Yes	No	No	No	No	No	Yes	Yes	NA	Yes	Greater than 12.5%	Greater than 2%	Greater than 48 inches	1	105	29
2881	1/4/2016	Nichols district 1	Woodsville	Rte 135	Perpendicular	Concrete	Poor	Yes	No	No	No	Yes	Yes	Yes	NA	NA	Yes	Less than 8.33%	Greater than 2%	Greater than 48 inches	1	103	30
1479	8/12/2015	Sandt DOT	Nashua	Amherst Street	Diagonal	Asphalt	Good	No	No	No	No	No	No	Yes	No	NA	Yes	Greater than 12.5%	Less than or equal to 2%	Greater than 48 inches	1	102	31
2503	11/5/2015	Sandt DOT	Seabrook	286	Parallel	Asphalt	Poor	No	No	No	No	No	No	Yes	No	NA	Yes	Less than 8.33%	Less than or equal to 2%	Greater than 48 inches	1	102	31
1625	8/28/2015	Sandt DOT	Troy	School Street	Parallel	Concrete	Fair	No	Yes	No	No	No	No	Yes	No	NA	Yes	Greater than 12.5%	Greater than 2%	Greater than 48 inches	1	102	31
38	6/12/2015	Sandt DOT	Pembroke	Pembroke Road	Parallel	Asphalt	Fair	No	Yes	No	No	No	Yes	Yes	No	NA	Yes	8.33% to 10%	Less than or equal to 2%	36 to 48 inches	1	101	31
275	7/13/2015	Sandt DOT	Nashua	Main Street	Diagonal	Concrete	Good	No	Yes	No	No	No	No	Yes	No	NA	Yes	Greater than 12.5%	Greater than 2%	36 to 48 inches	1	96	35
328	7/14/2015	Sandt DOT	Hudson	Lowell Road	Perpendicular	Concrete	Poor	Yes	No	No	No	No	No	Yes	No	NA	Yes	Less than 8.33%	Less than or equal to 2%	Greater than 48 inches	1	94	36
1667	9/2/2015	Sandt DOT	Winchester	Rt 10	Parallel	Concrete	Poor	Yes	No	No	No	No	Yes	Yes	Yes	NA	Yes	Less than 8.33%	Less than or equal to 2%	Greater than 48 inches	1	94	36
2859	12/28/2015	Sandt DOT	Meredith	Rt 3	Diagonal	Asphalt	Poor	Yes	No	No	No	No	No	Yes	Yes	Yes	Yes	10% to 12.5%	Greater than 2%	Greater than 48 inches	1	91	38
40	6/15/2015	Sandt DOT	Pembroke	Pembroke Road	Parallel	Asphalt	Fair	No	Yes	No	No	No	Yes	Yes	No	NA	Yes	Less than 8.33%	Less than or equal to 2%	36 to 48 inches	1	91	38
2765	12/15/2015	Wilkinson District 1	Littleton	Rte. 116	Parallel	Asphalt	Poor	Yes	No	No	No	No	No	Yes	Yes	NA	Yes	8.33% to 10%	Greater than 2%	36 to 48 inches	1	90	39
147	6/30/2015	Sandt DOT	Manchester	2nd Street	Perpendicular	Asphalt	Fair	Yes	No	No	No	No	No	Yes	Yes	NA	Yes	Greater than 12.5%	Greater than 2%	36 to 48 inches	1	90	39
1969	10/2/2015	Sandt DOT	Rochester	N Main St	Diagonal	Concrete	Poor	Yes	No	No	No	No	No	Yes	Yes	Yes	Yes	8.33% to 10%	Greater than 2%	Greater than 48 inches	1	90	39
1970	10/2/2015	Sandt DOT	Rochester	N Main St	Diagonal	Concrete	Poor	Yes	No	No	No	No	No	Yes	Yes	Yes	Yes	8.33% to 10%	Greater than 2%	Greater than 48 inches	1	90	39
1787	9/22/2015	Sandt DOT	Epping	Beede Hill Road	Parallel	Asphalt	Good	No	Yes	No	No	No	No	Yes	No	NA	Yes	Greater than 12.5%	Greater than 2%	Greater than 48 inches	1	88	40
1788	9/22/2015	Sandt DOT	Epping	Beede Hill Road	Parallel	Asphalt	Good	No	Yes	No	No	No	No	Yes	No	NA	Yes	Greater than 12.5%	Greater than 2%	Greater than 48 inches	1	88	40
2890	1/5/2016	Sandt DOT	Belmont	Rt 140	Diagonal	Asphalt	Good	No	Yes	No	No	No	No	Yes	No	No	Yes	8.33% to 10%	Greater than 2%	Greater than 48 inches	1	88	40
1478	8/12/2015	Sandt DOT	Nashua	Amherst Street	Perpendicular	Asphalt	Fair	No	No	No	No	No	No	Yes	No	NA	Yes	Less than 8.33%	Less than or equal to 2%	Greater than 48 inches	1	87	41
2031	10/6/2015	Sandt DOT	Dover	Knox Marsh Road	Perpendicular	Asphalt	Fair	No	No	No	No	No	No	Yes	No	NA	Yes	Less than 8.33%	Less than or equal to 2%	Greater than 48 inches	1	87	41
2253	10/23/2015	Sandt DOT	Newmarket	Exeter Road	Diagonal	Concrete	Poor	No	No	No	No	No	No	Yes	Yes	NA	Yes	Less than 8.33%	Less than or equal to 2%	Greater than 48 inches	1	86	41
2254	10/23/2015	Sandt DOT	Newmarket	Exeter Road	Diagonal	Concrete	Poor	No	No	No	No	No	No	Yes	Yes	NA	Yes	Less than 8.33%	Less than or equal to 2%	Greater than 48 inches	1	86	41
280	7/13/2015	Sandt DOT	Nashua	East Dunstable Road	Parallel	Concrete	Fair	No	Yes	No	No	No	No	Yes	No	NA	Yes	10% to 12.5%	Less than or equal to 2%	Greater than 48 inches	1	86	41
5140	3/23/2016	Sandt DOT	Plaistow	Rt 125	Diagonal	Asphalt	Good	Yes	Yes	No	No	No	Yes	Yes	No	No	Yes	Less than 8.33%	Greater than 2%	Greater than 48 inches	1	86	41
4137	3/18/2016	Sandt DOT	Plaistow	Rt 125	Perpendicular	Concrete	Good	No	Yes	No	No	Yes	No	Yes	No	NA	Yes	10% to 12.5%	Greater than 2%	Greater than 48 inches	1	85	42
274	7/13/2015	Sandt DOT	Nashua	Main Street	Diagonal	Concrete	Good	No	No	No	No	No	No	Yes	No	NA	Yes	Less than 8.33%	Less than or equal to 2%	36 to 48 inches	1	85	42
2501	11/19/2015	Wilkinson District 1	Gorham	Rte.2 and Rte. 16	Perpendicular	Asphalt	Fair	Yes	No	No	No	Yes	No	Yes	No	NA	Yes	Less than 8.33%	Greater than 2%	Greater than 48 inches	1	84	43
43	6/15/2015	Sandt DOT	Pembroke	Pembroke Road	Parallel	Asphalt	Good	No	Yes	No	No	No	Yes	Yes	No	NA	Yes	Less than 8.33%	Greater than 2%	Greater than 48 inches	1	83	44
45	6/15/2015	Sandt DOT	Pembroke	Pembroke Road	Parallel	Asphalt	Good	No	Yes	No	No	No	No	Yes	No	NA	Yes	Greater than 12.5%	Less than or equal to 2%	Greater than 48 inches	1	82	44
242	7/9/2015	Sandt DOT	Merrimack	Greeley Street	Parallel	Concrete	Good	No	Yes	No	No	No	No	Yes	No	NA	Yes	10% to 12.5%	Greater than 2%	Greater than 48 inches	1	82	44
1635	8/31/2015	Sandt DOT	Hinsdale	Brattleboro Road	Parallel	Concrete	Good	No	Yes	No	No	No	No	Yes	No	NA	Yes	10% to 12.5%	Greater than 2%	Greater than 48 inches	1	82	44
2507	11/5/2015	Sandt DOT	Seabrook	286	Parallel	Concrete	Good	No	Yes	No	No	No	No	Yes	No	NA	Yes	10% to 12.5%	Greater than 2%	Greater than 48 inches	1	82	44
2683	12/8/2015	Nichols district 1	Lancaster	Rte 2	Parallel	Concrete	Good	No	No	Yes	No	No	No	Yes	No	No	Yes	8.33% to 10%	Less than or equal to 2%	Greater than 48 inches	1	81	45
2083	10/8/2015	Sandt DOT	Durham	Main Street	Parallel	Concrete	Good	No	No	No	No	No	No	Yes	No	NA	Yes	Less than 8.33%	Less than or equal to 2%	Greater than 48 inches	1	81	45
247	7/9/2015	Sandt DOT	Merrimack	Greeley Street	Perpendicular	Concrete	Good	No	No	No	No	No	No	Yes	No	NA	Yes	Less than 8.33%	Less than or equal to 2%	Greater than 48 inches	1	81	45
2082	10/8/2015	Sandt DOT	Durham	Main Street	Parallel	Concrete	Good	No	No	No	No	No	No	Yes	No	NA	Yes	Less than 8.33%	Less than or equal to 2%	Greater than 48 inches	1	81	45
41	6/15/2015	Sandt DOT	Pembroke	Pembroke Roaf	Parallel	Asphalt	Good	No	Yes	No	No	No	Yes	Yes	No	NA	Yes	Less than 8.33%	Less than or equal to 2%	36 to 48 inches	1	81	45
2179	10/20/2015	Sandt DOT	Exeter	Portsmouth Ave	Perpendicular	Asphalt	Poor	Yes	Yes	No	No	No	No	Yes	Yes	NA	Yes	Greater than 12.5%	Greater than 2%	Greater than 48 inches	1	81	45
1592	8/24/2015	Sandt DOT	Jaffrey	Main Street	Diagonal	Asphalt	Poor	Yes	Yes	No	No	No	No	Yes	Yes	NA	Yes	Greater than 12.5%	Greater than 2%	Greater than 48 inches	1	81	45
1593	8/24/2015	Sandt DOT	Jaffrey	Main Street	Diagonal	Asphalt	Poor	Yes	Yes	No	No	No	No	Yes	Yes	NA	Yes	Greater than 12.5%	Greater than 2%	Greater than 48 inches	1	81	45
281	7/13/2015	Sandt DOT	Nashua	East Dunstable Road	Parallel	Concrete	Fair	No	Yes	No	No	No	No	Yes	No	NA	Yes	8.33% to 10%	Less than or equal to 2%	Greater than 48 inches	1	81	45
62	6/17/2015	Sandt DOT	Suncook	Main	Diagonal	Concrete	Good	No	Yes	Yes	No	No	No	Yes	No	No	Yes	Greater than 12.5%	Less than or equal to 2%	36 to 48 inches	1	80	46
1774	9/21/2015	Sandt DOT	Springfield	Springfield Rest Area	Parallel	Concrete	Good	No	Yes	No	No	Yes	No	Yes	No	NA	Yes	8.33% to 10%	Greater than 2%	Greater than 48 inches	1	80	46
2060	10/8/2015	Sandt DOT	Durham	Main Street	Parallel	Concrete	Good	Yes	No	No	No	No	No	Yes	Yes	NA	Yes	Greater than 12.5%	Greater than 2%	Greater than 48 inches	1	80	46
5138	3/23/2016	Sandt DOT	Plaistow	Rt 125	Diagonal	Asphalt	Good	Yes	Yes	No	No	No	Yes	Yes	No	No	Yes	Less than 8.33%	Less than or equal to 2%	Greater than 48 inches	1	80	46
5139	3/23/2016	Sandt DOT	Plaistow	Rt 125	Diagonal	Asphalt	Good	Yes	Yes	No	No	No	Yes	Yes	No	No	Yes	Less than 8.33%	Less than or equal to 2%	Greater than 48 inches	1	80	46
1773	9/21/2015	Sandt DOT	Springfield	Springfield Rest Area	Parallel	Concrete	Good	No	Yes	No	No	No	Yes	No	No	NA	Yes	10% to 12.5%	Less than or equal to 2%	Greater than 48 inches	1	79	46
3002	2/1/2016	Nichols district 1	Conway	Rte 302/16	Parallel	Concrete	Fair	Yes	No	Yes	No	Yes	No	Yes	No	No	Yes	Less than 8.33%	Greater than 2%	Greater than 48 inches	1	78	47
2719	12/9/2015	Nichols district 1	Lancaster	Rte 2 and Rte 3	Combined	Concrete	Good	Yes	No	Yes	No	No	No	Yes	No	No	Yes	10% to 12.5%	Less than or equal to 2%	36 to 48 inches	1	78	47
2019	10/6/2015	Sandt DOT	Dover	Knox Marsh Road	Parallel	Asphalt	Good	No	Yes	No	No	No	No	Yes	No	NA	Yes	10% to 12.5%	Greater than 2%	Greater than 48 inches	1	78	47
2903	1/7/2016	Sandt DOT	Tilton	Rt 140	Diagonal	Asphalt	Fair	No	Yes	No	No	No	No	Yes	NA	NA	Yes	Greater than 12.5%	Greater than 2%	Greater than 48 inches	1	78	47
1477	8/12/2015	Sandt DOT	Nashua	Amherst Street	Perpendicular	Asphalt	Good	No	Yes	No	No	No	Yes	Yes	No	NA	Yes	Less than 8.33%	Less than or equal to 2%	Greater than 48 inches	1	77	48
1252	7/22/2015	Sandt DOT	Derry	W Broadway	Parallel	Asphalt	Good	Yes	No	No	No	No	No	Yes	Yes	NA	Yes	Greater than 12.5%	Greater than 2%	Greater than 48 inches	1	76	48
1607	8/27/2015	Sandt DOT	Jaffrey	Main Street	Perpendicular	Asphalt	Poor	Yes	No	No	No	No	No	Yes	Yes	NA	Yes	Less than 8.33%	Greater than 2%	Greater than 48 inches	1	76	48
1251	7/22/2015	Sandt DOT	Derry	W Broadway	Parallel	Asphalt	Fair	Yes	No	No	No	No	No	Yes	Yes	NA	Yes	10% to 12.5%	Greater than 2%	Greater than 48 inches	1	76	48
243	7/9/2015	Sandt DOT	Merrimack	Greeley Street	Diagonal	Concrete	Good	No	Yes	No	No	No	No	Yes	No	NA	Yes	10% to 12.5%	Less than or equal to 2%	Greater than 48 inches	1	76	48
244	7/9/2015	Sandt DOT	Merrimack	Greeley Street	Diagonal	Concrete	Good	No	Yes	No	No	No	No	Yes	No	NA	Yes	10% to 12.5%	Less than or equal to 2%	Greater than 48 inches	1	76	48
204	7/7/2015	Sandt DOT	Concord	Foundry Street	Perpendicular	Concrete	Good	No	Yes	No	No	No	No	Yes	No	NA	Yes	10% to 12.5%	Less than or equal to 2%	Greater than 48 inches	1	76	48
279	7/13/2015	Sandt DOT	Nashua	East Dunstable Road	Parallel	Concrete	Good	No	Yes	No	No	No	No	Yes	No	NA	Yes	10% to 12.5%	Less than or equal to 2%	Greater than 48 inches	1	76	48
4021	2/22/2016	Sandt DOT	Meredith	Rt 3	Parallel	Concrete	Good	No	Yes	No	No	No	No	Yes	No	NA	Yes	10% to 12.5%	Less than or equal to 2%	Greater than 48 inches	1	76	48
2994	2/1/2016	Nichols district 1	Conway	Rte 302/16	Parallel	Concrete	Fair	Yes	No	Yes	No	No	No	Yes	No	No	Yes	Less than 8.33%	Greater than 2%	Greater than 48 inches	1	75	49
2687	12/8/2015	Nichols district 1	Lancaster	Rte 2	Combined	Concrete	Good	Yes	No	Yes	No	No	No	Yes	No	No	Yes	8.33% to 10%	Greater than 2%	Greater than 48 inches	1	75	49
144	6/30/2015	Sandt DOT	Manchester	2nd Street	Diagonal	Asphalt	Fair	Yes	No	No	No	No	No	Yes	Yes	Yes	Yes	8.33% to 10%	Greater than 2%	36 to 48 inches	1	75	49
2410	10/27/2015	Wilkinson District 1	Colebrook	Rte.3	Parallel	Concrete	Fair	Yes	No	No	No	No	No	Yes	Yes	No	Yes	Less than 8.33%	Less than or equal to 2%	Greater than 48 inches	1	74	50
2296	10/27/2015	Sandt DOT	Hampton	High Street	Perpendicular	Concrete	Poor	Yes	No	No	No	No	No	Yes	Yes	NA	Yes	Less than 8.33%	Less than or equal to 2%	Greater than 48 inches	1	74	50
2064	10/8/2015	Sandt DOT	Durham	Main Street	Perpendicular	Concrete	Poor	Yes	No	No	No	No	No	Yes	Yes	NA	Yes	Less than 8.33%	Less than or equal to 2%	Greater than 48 inches	1	74	50
1454	8/10/2015	Sandt DOT	Hillsborough	W Main Street	Diagonal	Concrete	Poor	Yes	No	No	No	No	No	Yes	Yes	Yes	Yes	Less than 8.33%	Less than or equal to 2%	Greater than 48 inches	1	74	50
1281	7/23/2015	Sandt DOT	Derry	E Broadway	Parallel	Stamped Asphalt	Good	Yes	No	No	No	No	No	Yes	Yes	NA	Yes	10% to 12.5%	Greater than 2%	Greater than 48 inches	1	74	50
1282	7/23/2015	Sandt DOT	Derry	E Broadway	Parallel	Stamped Asphalt	Good	Yes	No	No	No	No	No	Yes	Yes	NA	Yes	10% to 12.5%	Greater than 2%	Greater than 48 inches	1	74	50
2069	10/8/2015	Sandt DOT	Durham	Main Street	Parallel	Concrete	Poor	Yes	No	No	No	No	No	Yes	Yes	NA	Yes	Less than 8.33%	Less than or equal to 2%	Greater than 48 inches	1	74	50
2076	10/8/2015	Sandt DOT	Durham	Main Street	Diagonal	Concrete	Poor	Yes	No	No	No	No	No	Yes	Yes	Yes	Yes	Less than 8.33%	Less than or equal to 2%	Greater than 48 inches	1	74	50
1407	7/31/2015	Sandt DOT	Henniker	Bridge Street	Perpendicular	Concrete	Good	Yes	Yes	No	No	No	No	Yes	No	NA	Yes	Greater than 12.5%	Less than or equal to 2%	Greater than 48 inches	1	74	50
319	7/13/2015	Sandt DOT	Nashua	Main Street	Diagonal	Concrete	Good	Yes	Yes	No	No	No	No	Yes	No	Yes	Yes	Greater than 12.5%	Less than or equal to 2%	Greater than 48 inches	1	74	50
2906	1/7/2016	Nichols district 1	Woodsville	Rte 10	Diagonal	Concrete	Poor	Yes	No	Yes	No	No	Yes	Yes	NA	NA	Yes	Less than 8.33%	Less than or equal to 2%	36 to 48 inches	1	73	50
1755	9/16/2015	Sandt DOT	Newport	Rt 10	Perpendicular	Brick	Good	Yes	No	No	No	No	No	Yes	Yes	NA	Yes	10% to 12.5%	Less than or equal to 2%	Greater than 48 inches	1	72	51
47	6/15/2015	Sandt DOT	Pembroke	Academy Road	Parallel	Asphalt	Good	No	Yes	No	No	No	No	Yes	No	NA	Yes	10% to 12.5%	Less than or equal to 2%	Greater than 48 inches	1	72	51
1392	7/30/2015	Sandt DOT	Brookline	Milford Street	Parallel	Asphalt	Fair	No	Yes	No	No	No	No	Yes	Yes	NA	Yes	Greater than 12.5%	Less than or equal to 2%	Greater than 48 inches	1	72	51
2684	12/8/2015	Nichols district 1	Lancaster	Rte 2	Parallel	Concrete	Good	No	No	Yes	No	No	No	Yes	No	No	Yes	Less than 8.33%	Less than or equal to 2%	Greater than 48 inches	1	71	52
1366	7/24/2015	Sandt DOT	Auburn	Manchester Road	Parallel	Concrete	Good	No	No	Yes	Yes	No	No	Yes	Yes	No	NA	No	Less than 8.33%	Less than or equal to 2%	Greater than 48 inches	1	71	52
5147	3/30/2016	Sandt DOT	Plaistow	Kingston Road	Parallel	Concrete	Fair	No	No	No	No	No	No	Yes	Yes	NA	Yes	Less than 8.33%	Less than or equal to 2%	Greater than 48 inches	1	71	52
110	6/26/2015	Sandt DOT	Manchester	2nd	Combined	Concrete	Good	No	Yes	No	No	No	No	Yes	No	NA	Yes	Less than 8.33%	Greater than 2%	36 to 48 inches	1	71	52
1855	9/25/2015	Sandt DOT	Exeter	Rt 27	Parallel	Concrete	Fair	No	Yes	No	No	No	No	Yes	No	NA	Yes	Less than 8.33%	Less than or equal to 2%	Greater than 48 inches	1	71	52
1857	9/25/2015	Sandt DOT	Exeter	Rt 27	Parallel	Concrete	Fair	No	Yes	No	No	No	No	Yes	No	NA	Yes	Less than 8.33%	Less than or equal to 2%	Greater than 48 inches	1	71	52
1845	9/25/2015	Sandt DOT	Brentwood	North Road	Parallel	Concrete	Good	No	Yes	No	No	No	No	Yes	No	NA	Yes	8.33% to 10%	Less than or equal to 2%	Greater than 48 inches	1	71	52
1846	9/25/2015	Sandt DOT	Brentwood	North Road	Combined	Concrete	Good	No	Yes	No	No	No	No	Yes	No	NA	Yes	8.33% to 10%	Less than or equal to 2%	Greater than 48 inches	1	71	52
1847	9/25/2015	Sandt DOT	Brentwood	North Road	Parallel	Concrete	Good	No	Yes	No	No	No	No	Yes	No	NA	Yes	8.33% to 10%	Less than or equal to 2%	Greater than 48 inches	1	71	52
1848	9/25/2015	Sandt DOT	Brentwood	North Road	Parallel	Concrete	Good	No	Yes	No	No	No	No	Yes	No	NA	Yes	8.33% to 10%	Less than or equal to 2%	Greater than 48 inches	1	71	52
1851	9/25/2015	Sandt DOT	Brentwood	North Road	Combined	Concrete	Good	No	Yes	No	No	No	No	Yes	No	NA	Yes	8.33% to 10%	Less than or equal to 2%	Greater than 48 inches	1	71	52
1852	9/25/2015	Sandt DOT	Brentwood	North Road	Parallel	Concrete	Good	No	Yes	No	No	No	No	Yes	No	NA	Yes	8.33% to 10%	Less than or equal to 2%	Greater than 48 inches	1	71	52
1853	9/25/2015	Sandt DOT	Brentwood	North Road	Parallel	Concrete	Good	No	Yes	No	No	No	No	Yes	No	NA	Yes	8.33% to 10%	Less than or equal to 2%	Greater than 48 inches	1	71	52
1854	9/25/2015	Sandt DOT	Brentwood	North Road	Parallel	Concrete	Good	No	Yes	No	No	No	No	Yes	No	NA	Yes	8.33% to 10%	Less than or equal to 2%	Greater than 48 inches	1	71	52
1772	9/21/2015	Sandt DOT	Springfield	Springfield Rest Area	Perpendicular	Concrete	Good	No	Yes	No	No	Yes	No	Yes	No	NA	Yes	Less than 8.33%	Greater than 2%	Greater than 48 inches	1	70	52
4139	3/18/2016	Sandt DOT	Plaistow	Rt 125	Perpendicular	Concrete	Good	No	Yes	No	No	Yes	No	Yes	No	NA	Yes	Less than 8.33%	Greater than 2%	Greater than 48 inches	1	70	52
2294	10/27/2015	Sandt DOT	Hampton	Ocean Blvd	Perpendicular	Asphalt	Poor	Yes	No	No	No	No	No	Yes	Yes	NA	Yes	Less than 8.33%	Less than or equal to 2%	Greater than 48 inches	1	70	52
148	6/30/2015	Sandt DOT	Manchester	2nd Street	Diagonal	Asphalt	Fair	Yes	Yes	No	No	No	No	Yes	Yes	Yes	Yes	Greater than 12.5%	Greater than 2%	36 to 48 inches	1	70	52
4057	2/29/2016	Sandt DOT	Seabrook	Rt 1	Perpendicular	Asphalt	Poor	Yes	Yes	No	No	No	No	Yes	No	Yes	Yes	Less than 8.33%	Less than or equal to 2%	Greater than 48 inches	1	70	52
2413	11/2/2015	Nichols district 1	Colebrook	Rte 26	Parallel	Concrete	Good	Yes	No	Yes	No	No	No	Yes	No	No	Yes	Less than 8.33%	Greater than 2%	36 to 48 inches	1	69	53
1279	7/22/2015	Sandt DOT	Derry	W Broadway	Parallel	Stamped Asphalt	Good	Yes	No	No	No	No	No	Yes	Yes	NA	Yes	8.33% to 10%	Greater than 2%	Greater than 48 inches	1	69	53
1567	8/19/2015	Sandt DOT	Peterborough	Main	Parallel	Concrete	Poor	Yes	Yes	No	No	No	No	Yes	Yes	NA	Yes	10% to 12.5%	Less than or equal to 2%	Greater than 48 inches	1	69	53
3003	2/1/2016	Nichols district 1	Conway	Rte 302/16	Combined	Concrete	Fair	Yes	Yes	Yes	No	Yes	No	Yes	No	No	Yes	8.33% to 10%	Greater than 2%	Greater than 48 inches	1	68	54

311	7/13/2015 Sandt DOT	Nashua	East Dunstable Road	Perpendicular	Asphalt	Good	No	Yes	No	No	No	No	Yes	Yes	NA	Yes	Greater than 12.5%	Greater than 2%	Greater than 48 inches	1	68	54
1804	9/22/2015 Sandt DOT	Epping	Water Street	Perpendicular	Brick	Good	Yes	Yes	No	No	No	No	Yes	Yes	NA	Yes	Greater than 12.5%	Greater than 2%	Greater than 48 inches	1	68	54
1805	9/22/2015 Sandt DOT	Epping	Water Street	Perpendicular	Brick	Good	Yes	Yes	No	No	No	No	Yes	Yes	NA	Yes	Greater than 12.5%	Greater than 2%	Greater than 48 inches	1	68	54
1806	9/22/2015 Sandt DOT	Epping	Water Street	Perpendicular	Brick	Good	Yes	Yes	No	No	No	No	Yes	Yes	NA	Yes	Greater than 12.5%	Greater than 2%	Greater than 48 inches	1	68	54
1403	7/31/2015 Sandt DOT	Warner	W Main Street	Diagonal	Brick	Good	Yes	Yes	No	No	No	No	Yes	Yes	NA	Yes	Greater than 12.5%	Greater than 2%	Greater than 48 inches	1	68	54
2738	12/10/2015 Sandt DOT	Laconia	Rt 3	Diagonal	Concrete	Good	No	No	Yes	No	No	No	Yes	NA	NA	Yes	Greater than 12.5%	Greater than 2%	Greater than 48 inches	1	67	54
61	6/17/2015 Sandt DOT	Suncook	Main	Parallel	Concrete	Good	No	Yes	Yes	No	No	No	Yes	No	NA	Yes	Greater than 12.5%	Greater than 2%	Greater than 48 inches	1	67	54
46	6/15/2015 Sandt DOT	Pembroke	Academy Road	Parallel	Asphalt	Good	No	Yes	No	No	No	No	Yes	No	NA	Yes	Less than 8.33%	Greater than 2%	36 to 48 inches	1	67	54
1859	9/25/2015 Sandt DOT	Exeter	Rt 27	Parallel	Asphalt	Fair	No	Yes	No	No	No	No	Yes	No	NA	Yes	Less than 8.33%	Less than or equal to 2%	Greater than 48 inches	1	67	54
1563	8/19/2015 Sandt DOT	Peterborough	Main	Parallel	Concrete	Good	No	Yes	No	No	No	No	Yes	No	NA	Yes	Less than 8.33%	Greater than 2%	Greater than 48 inches	1	67	54
283	7/13/2015 Sandt DOT	Nashua	East Dunstable Road	Parallel	Concrete	Good	No	Yes	No	No	No	No	Yes	No	NA	Yes	Less than 8.33%	Greater than 2%	Greater than 48 inches	1	67	54
4026	2/22/2016 Sandt DOT	Meredith	Rt 3	Parallel	Concrete	Good	No	Yes	No	No	No	No	Yes	No	NA	Yes	Less than 8.33%	Greater than 2%	Greater than 48 inches	1	67	54
2741	12/10/2015 Sandt DOT	Laconia	Rt 3	Parallel	Concrete	Good	No	Yes	No	No	No	No	Yes	No	NA	Yes	Less than 8.33%	Greater than 2%	Greater than 48 inches	1	67	54
2742	12/10/2015 Sandt DOT	Laconia	Rt 3	Diagonal	Concrete	Good	No	Yes	No	No	No	No	Yes	No	NA	Yes	Less than 8.33%	Greater than 2%	Greater than 48 inches	1	67	54
2743	12/10/2015 Sandt DOT	Laconia	Rt 3	Diagonal	Concrete	Good	No	Yes	No	No	No	No	Yes	No	NA	Yes	Less than 8.33%	Greater than 2%	Greater than 48 inches	1	67	54
1253	7/22/2015 Sandt DOT	Derry	E Broadway	Parallel	Asphalt	Good	Yes	No	No	No	No	No	Yes	Yes	NA	Yes	10% to 12.5%	Greater than 2%	Greater than 48 inches	1	66	55
1254	7/22/2015 Sandt DOT	Derry	E Broadway	Perpendicular	Asphalt	Good	Yes	No	No	No	No	No	Yes	Yes	NA	Yes	10% to 12.5%	Greater than 2%	Greater than 48 inches	1	66	55
145	6/30/2015 Sandt DOT	Manchester	2nd Street	Diagonal	Asphalt	Fair	Yes	Yes	No	No	No	No	Yes	Yes	Yes	Yes	Greater than 12.5%	Greater than 2%	Greater than 48 inches	1	66	55
146	6/30/2015 Sandt DOT	Manchester	2nd Street	Perpendicular	Asphalt	Fair	Yes	Yes	No	No	No	No	Yes	Yes	NA	Yes	Greater than 12.5%	Greater than 2%	Greater than 48 inches	1	66	55
2996	2/1/2016 Nichols district 1	Conway	Rte 302/16	Parallel	Concrete	Fair	Yes	Yes	Yes	No	No	No	Yes	No	No	Yes	8.33% to 10%	Greater than 2%	Greater than 48 inches	1	65	56
273	7/13/2015 Sandt DOT	Nashua	Main Street	Diagonal	Concrete	Good	No	Yes	No	No	No	No	Yes	No	NA	Yes	Less than 8.33%	Less than or equal to 2%	36 to 48 inches	1	65	56
276	7/13/2015 Sandt DOT	Nashua	Main Street	Diagonal	Concrete	Good	No	Yes	No	No	No	No	Yes	No	NA	Yes	Less than 8.33%	Less than or equal to 2%	36 to 48 inches	1	65	56
378	7/16/2015 Sandt DOT	Derry	Manchester Road	Diagonal	Asphalt	Good	Yes	Yes	No	No	No	Yes	Yes	No	NA	Yes	Less than 8.33%	Less than or equal to 2%	Greater than 48 inches	1	65	56
36				Parallel	Asphalt	Good	Yes	Yes	No	No	No	No	No	No	Yes	Yes	Less than 8.33%	Less than or equal to 2%	Greater than 48 inches	1	65	56
104	6/26/2015 Sandt Dot	Manchester	Daniel Webster Hwy	Diagonal	Concrete	Good	Yes	Yes	No	No	No	Yes	Yes	Yes	Yes	Yes	8.33% to 10%	Greater than 2%	Greater than 48 inches	1	65	56
5	10/30/2014 Srpc Tom brown	Rochester	Community way	Parallel	Asphalt	Good	Yes	Yes	No	No	No	No	Yes	Yes	No	NA	Less than 8.33%	Less than or equal to 2%	Greater than 48 inches	1	65	56
1775	9/21/2015 Sandt DOT	Springfield	Springfield Rest Area	Parallel	Concrete	Good	No	Yes	No	No	No	Yes	No	Yes	No	NA	Less than 8.33%	Less than or equal to 2%	Greater than 48 inches	1	64	56
1776	9/21/2015 Sandt DOT	Springfield	Springfield Rest Area	Parallel	Concrete	Good	No	Yes	No	No	No	Yes	No	Yes	No	NA	Less than 8.33%	Less than or equal to 2%	Greater than 48 inches	1	64	56
1777	9/21/2015 Sandt DOT	Springfield	Springfield Rest Area	Parallel	Concrete	Good	No	Yes	No	No	No	Yes	No	Yes	No	NA	Less than 8.33%	Less than or equal to 2%	Greater than 48 inches	1	64	56
1778	9/21/2015 Sandt DOT	Springfield	Springfield Rest Area	Parallel	Concrete	Good	No	Yes	No	No	No	Yes	No	Yes	No	NA	Less than 8.33%	Less than or equal to 2%	Greater than 48 inches	1	64	56
2992	1/29/2016 Sandt DOT	Concord	Stickney Ave	Perpendicular	Concrete	Good	No	Yes	No	No	No	Yes	No	Yes	No	NA	Less than 8.33%	Less than or equal to 2%	Greater than 48 inches	1	64	56
5143	3/28/2016 Sandt DOT	Portsmouth	Portsmouth Transportation Center	Perpendicular	Concrete	Good	No	Yes	No	No	No	Yes	No	Yes	No	NA	Less than 8.33%	Less than or equal to 2%	Greater than 48 inches	1	64	56
1612	8/27/2015 Sandt DOT	Jaffrey	Main Street	Perpendicular	Concrete	Good	Yes	No	No	No	No	No	Yes	Yes	NA	Yes	10% to 12.5%	Less than or equal to 2%	Greater than 48 inches	1	64	56
1613	8/27/2015 Sandt DOT	Jaffrey	Main Street	Perpendicular	Concrete	Good	Yes	No	No	No	No	No	Yes	Yes	NA	Yes	10% to 12.5%	Less than or equal to 2%	Greater than 48 inches	1	64	56
1271	7/22/2015 Sandt DOT	Derry	W Broadway	Parallel	Stamped Asphalt	Good	Yes	Yes	No	No	No	No	Yes	Yes	NA	Yes	Greater than 12.5%	Greater than 2%	Greater than 48 inches	1	64	56
1272	7/22/2015 Sandt DOT	Derry	W Broadway	Parallel	Stamped Asphalt	Good	Yes	Yes	No	No	No	No	Yes	Yes	NA	Yes	Greater than 12.5%	Greater than 2%	Greater than 48 inches	1	64	56
1278	7/22/2015 Sandt DOT	Derry	W Broadway	Parallel	Stamped Asphalt	Good	Yes	Yes	No	No	No	No	Yes	Yes	NA	Yes	Greater than 12.5%	Greater than 2%	Greater than 48 inches	1	64	56
386	7/17/2015 Sandt DOT	Pittsfield	Main Street	Parallel	Brick	Good	Yes	No	No	No	No	No	Yes	Yes	NA	Yes	Less than 8.33%	Greater than 2%	Greater than 48 inches	1	63	57
2900	1/7/2016 Sandt DOT	Tilton	Rt 3	Diagonal	Asphalt	Fair	No	Yes	No	No	No	No	Yes	NA	NA	Yes	8.33% to 10%	Greater than 2%	Greater than 48 inches	1	63	57
2500	11/19/2015 Wilkinson District 1	Gorham	Rte. 16	Perpendicular	Asphalt	Fair	No	Yes	Yes	No	No	No	Yes	No	NA	Yes	8.33% to 10%	Greater than 2%	36 to 48 inches	1	62	58
1763	9/17/2015 Sandt DOT	Newport	Rt 10	Parallel	Brick	Good	Yes	Yes	No	No	No	No	Yes	Yes	NA	Yes	Greater than 12.5%	Less than or equal to 2%	Greater than 48 inches	1	62	58
1402	7/31/2015 Sandt DOT	Warner	E Main Street	Diagonal	Brick	Good	Yes	Yes	No	No	No	No	Yes	Yes	NA	Yes	Greater than 12.5%	Less than or equal to 2%	Greater than 48 inches	1	62	58
2414	11/2/2015 Nichols district 1	Colerook	Rte 26	Parallel	Concrete	Good	No	Yes	Yes	No	No	No	Yes	No	No	Yes	Less than 8.33%	Greater than 2%	36 to 48 inches	1	61	59
64	6/17/2015 Sandt DOT	Allenstown	Main	Parallel	Concrete	Good	No	Yes	Yes	No	No	No	Yes	No	NA	Yes	Greater than 12.5%	Less than or equal to 2%	Greater than 48 inches	1	61	59
1609	8/27/2015 Sandt DOT	Jaffrey	Main Street	Perpendicular	Asphalt	Fair	Yes	No	No	No	No	No	Yes	Yes	NA	Yes	Less than 8.33%	Greater than 2%	Greater than 48 inches	1	61	59
1296	7/23/2015 Sandt DOT	Derry	E Broadway	Parallel	Asphalt	Good	Yes	No	No	No	No	No	Yes	Yes	NA	Yes	8.33% to 10%	Greater than 2%	Greater than 48 inches	1	61	59
2610	11/30/2015 Sandt DOT	Concord	Rt 13	Parallel	Asphalt	Good	Yes	No	No	No	No	No	Yes	Yes	NA	Yes	8.33% to 10%	Greater than 2%	Greater than 48 inches	1	61	59
2411	10/27/2015 Nichols district 1	Colebrook	Rte 3	Parallel	Asphalt	Good	Yes	Yes	No	No	No	No	Yes	No	Yes	Yes	8.33% to 10%	Greater than 2%	Greater than 48 inches	1	61	59
1881	9/28/2015 Sandt DOT	Farmington	Elm Street	Parallel	Concrete	Good	No	Yes	No	No	No	No	Yes	No	NA	Yes	Less than 8.33%	Less than or equal to 2%	Greater than 48 inches	1	61	59
1498	8/13/2015 Sandt DOT	Hollis	Main	Parallel	Concrete	Good	No	Yes	No	No	No	No	Yes	No	NA	Yes	Less than 8.33%	Less than or equal to 2%	Greater than 48 inches	1	61	59
1499	8/13/2015 Sandt DOT	Hollis	Monument Square	Parallel	Concrete	Good	No	Yes	No	No	No	No	Yes	No	NA	Yes	Less than 8.33%	Less than or equal to 2%	Greater than 48 inches	1	61	59
1326	7/24/2015 Sandt DOT	Londonderry	Rockingham Road	Parallel	Concrete	Good	No	Yes	No	No	No	No	Yes	No	NA	Yes	Less than 8.33%	Less than or equal to 2%	Greater than 48 inches	1	61	59
1327	7/24/2015 Sandt DOT	Londonderry	Rockingham Road	Parallel	Concrete	Good	No	Yes	No	No	No	No	Yes	No	NA	Yes	Less than 8.33%	Less than or equal to 2%	Greater than 48 inches	1	61	59
1328	7/24/2015 Sandt DOT	Londonderry	Rockingham Road	Parallel	Concrete	Good	No	Yes	No	No	No	No	Yes	No	NA	Yes	Less than 8.33%	Less than or equal to 2%	Greater than 48 inches	1	61	59
1329	7/24/2015 Sandt DOT	Londonderry	Rockingham Road	Parallel	Concrete	Good	No	Yes	No	No	No	No	Yes	No	NA	Yes	Less than 8.33%	Less than or equal to 2%	Greater than 48 inches	1	61	59
1330	7/24/2015 Sandt DOT	Londonderry	Rockingham Road	Parallel	Concrete	Good	No	Yes	No	No	No	No	Yes	No	NA	Yes	Less than 8.33%	Less than or equal to 2%	Greater than 48 inches	1	61	59
1331	7/24/2015 Sandt DOT	Londonderry	Rockingham Road	Diagonal	Concrete	Good	No	Yes	No	No	No	No	Yes	No	NA	Yes	Less than 8.33%	Less than or equal to 2%	Greater than 48 inches	1	61	59
1351	7/24/2015 Sandt DOT	Londonderry	Rockingham Road	Parallel	Concrete	Good	No	Yes	No	No	No	No	Yes	No	NA	Yes	Less than 8.33%	Less than or equal to 2%	Greater than 48 inches	1	61	59
1352	7/24/2015 Sandt DOT	Londonderry	Rockingham Road	Parallel	Concrete	Good	No	Yes	No	No	No	No	Yes	No	NA	Yes	Less than 8.33%	Less than or equal to 2%	Greater than 48 inches	1	61	59
1353	7/24/2015 Sandt DOT	Londonderry	Rockingham Road	Parallel	Concrete	Good	No	Yes	No	No	No	No	Yes	No	NA	Yes	Less than 8.33%	Less than or equal to 2%	Greater than 48 inches	1	61	59
239	7/9/2015 Sandt DOT			Parallel	Concrete	Good	No	Yes	No	No	No	No	Yes	No	NA	Yes	Less than 8.33%	Less than or equal to 2%	Greater than 48 inches	1	61	59
240	7/9/2015 Sandt DOT	Merrimack	Greeley Street	Parallel	Concrete	Good	No	Yes	No	No	No	No	Yes	No	NA	Yes	Less than 8.33%	Less than or equal to 2%	Greater than 48 inches	1	61	59
241	7/9/2015 Sandt DOT	Merrimack	Greeley Street	Parallel	Concrete	Good	No	Yes	No	No	No	No	Yes	No	NA	Yes	Less than 8.33%	Less than or equal to 2%	Greater than 48 inches	1	61	59
245	7/9/2015 Sandt DOT	Merrimack	Greeley Street	Parallel	Concrete	Good	No	Yes	No	No	No	No	Yes	No	NA	Yes	Less than 8.33%	Less than or equal to 2%	Greater than 48 inches	1	61	59
246	7/9/2015 Sandt DOT	Merrimack	Greeley Street	Diagonal	Concrete	Good	No	Yes	No	No	No	No	Yes	No	NA	Yes	Less than 8.33%	Less than or equal to 2%	Greater than 48 inches	1	61	59
248	7/9/2015 Sandt DOT	Merrimack	Greeley Street	Parallel	Concrete	Good	No	Yes	No	No	No	No	Yes	No	NA	Yes	Less than 8.33%	Less than or equal to 2%	Greater than 48 inches	1	61	59
1856	9/25/2015 Sandt DOT	Exeter	Rt 27	Parallel	Concrete	Good	No	Yes	No	No	No	No	Yes	No	NA	Yes	Less than 8.33%	Less than or equal to 2%	Greater than 48 inches	1	61	59
1858	9/25/2015 Sandt DOT	Exeter	Rt 27	Parallel	Concrete	Good	No	Yes	No	No	No	No	Yes	No	NA	Yes	Less than 8.33%	Less than or equal to 2%	Greater than 48 inches	1	61	59
1902	9/30/2015 Sandt Dot	Conway	Main Street	Parallel	Concrete	Good	No	Yes	No	No	No	No	Yes	No	NA	Yes	Less than 8.33%	Less than or equal to 2%	Greater than 48 inches	1	61	59
1903	9/30/2015 Sandt Dot	Conway	Main Street	Parallel	Concrete	Good	No	Yes	No	No	No	No	Yes	No	NA	Yes	Less than 8.33%	Less than or equal to 2%	Greater than 48 inches	1	61	59
1545	8/17/2015 Sandt DOT	Bennington	Main Street	Perpendicular	Concrete	Good	No	Yes	No	No	No	No	Yes	No	NA	Yes	Less than 8.33%	Less than or equal to 2%	Greater than 48 inches	1	61	59
2127	10/15/2015 Sandt DOT	Stratham	Rt 108	Diagonal	Concrete	Good	No	Yes	No	No	No	No	Yes	No	NA	Yes	Less than 8.33%	Less than or equal to 2%	Greater than 48 inches	1	61	59
2153	10/15/2015 Sandt DOT	Stratham	Rt 108	Perpendicular	Concrete	Good	No	Yes	No	No	No	No	Yes	No	NA	Yes	Less than 8.33%	Less than or equal to 2%	Greater than 48 inches	1	61	59
2154	10/15/2015 Sandt DOT	Stratham	Rt 108	Perpendicular	Concrete	Good	No	Yes	No	No	No	No	Yes	No	NA	Yes	Less than 8.33%	Less than or equal to 2%	Greater than 48 inches	1	61	59
200	7/6/2015 Sandt DOT	Bedford	S River Road	Parallel	Concrete	Good	No	Yes	No	No	No	No	Yes	No	NA	Yes	Less than 8.33%	Less than or equal to 2%	Greater than 48 inches	1	61	59
201	7/6/2015 Sandt DOT	Bedford	S River Road	Parallel	Concrete	Good	No	Yes	No	No	No	No	Yes	No	NA	Yes	Less than 8.33%	Less than or equal to 2%	Greater than 48 inches	1	61	59
285	7/13/2015 Sandt DOT	Nashua	East Dunstable Road	Parallel	Concrete	Good	No	Yes	No	No	No	No	Yes	No	NA	Yes	Less than 8.33%	Less than or equal to 2%	Greater than 48 inches	1	61	59
286	7/13/2015 Sandt DOT	Nashua	East Dunstable Road	Parallel	Concrete	Good	No	Yes	No	No	No	No	Yes	No	NA	Yes	Less than 8.33%	Less than or equal to 2%	Greater than 48 inches	1	61	59
287	7/13/2015 Sandt DOT	Nashua	East Dunstable Road	Parallel	Concrete	Good	No	Yes	No	No	No	No	Yes	No	NA	Yes	Less than 8.33%	Less than or equal to 2%	Greater than 48 inches	1	61	59
288	7/13/2015 Sandt DOT	Nashua	East Dunstable Road	Parallel	Concrete	Good	No	Yes	No	No	No	No	Yes	No	NA	Yes	Less than 8.33%	Less than or equal to 2%	Greater than 48 inches	1	61	59
289	7/13/2015 Sandt DOT	Nashua	East Dunstable Road	Parallel	Concrete	Good	No	Yes	No	No	No	No	Yes	No	NA	Yes	Less than 8.33%	Less than or equal to 2%	Greater than 48 inches	1	61	59
290	7/13/2015 Sandt DOT	Nashua	East Dunstable Road	Parallel	Concrete	Good	No	Yes	No	No	No	No	Yes	No	NA	Yes	Less than 8.33%	Less than or equal to 2%	Greater than 48 inches	1	61	59
291	7/13/2015 Sandt DOT	Nashua	East Dunstable Road	Parallel	Concrete	Good	No	Yes	No	No	No	No	Yes	No	NA	Yes	Less than 8.33%	Less than or equal to 2%	Greater than 48 inches	1	61	59
2230	10/22/2015 Sandt DOT	Newington	Pease Blvd	Diagonal	Concrete	Good	No	Yes	No	No	No	No	Yes	No	Yes	Yes	Less than 8.33%	Less than or equal to 2%	Greater than 48 inches	1	61	59
155	6/30/2015 Sandt DOT	Manchester	Hanover Street	Parallel	Concrete	Good	No	Yes	No	No	No	No	Yes	No	NA	Yes	Less than 8.33%	Less than or equal to 2%	Greater than 48 inches	1	61	59
4076	3/7/2016 Sandt DOT	Swanzey	Rt 12	Perpendicular	Concrete	Good	No	Yes	No	No	No	No	Yes	No	NA	Yes	Less than 8.33%	Less than or equal to 2%	Greater than 48 inches	1	61	59
4077	3/7/2016 Sandt DOT	Swanzey	Rt 12	Perpendicular	Concrete	Good	No	Yes	No	No	No	No	Yes	No	NA	Yes	Less than 8.33%	Less than or equal to 2%	Greater than 48 inches	1	61	59
4022	2/22/2016 Sandt DOT	Meredith	Rt 3	Parallel	Concrete	Good	No	Yes	No	No	No	No	Yes	No	NA	Yes	Less than 8.33%	Less than or equal to 2%	Greater than 48 inches	1	61	59
4023	2/22/2016 Sandt DOT	Meredith	Rt 3	Parallel	Concrete	Good	No	Yes	No	No	No	No	Yes	No	NA	Yes	Less than 8.33%	Less than or equal to 2%	Greater than 48 inches	1	61	59
4024	2/22/2016 Sandt DOT	Meredith	Rt 3	Parallel	Concrete	Good	No	Yes	No	No	No	No	Yes	No	NA	Yes	Less than 8.33%	Less than or equal to 2%	Greater than 48 inches	1	61	59
4025	2/22/2016 Sandt DOT	Meredith	Rt 3	Parallel	Concrete	Good	No	Yes	No	No	No	No	Yes	No	NA	Yes	Less than 8.33%	Less than or equal to 2%	Greater than 48 inches	1	61	59
2990	1/29/2016 Sandt DOT	Concord	Stickney Ave	Parallel	Concrete	Good	No	Yes	No	No	No	No	Yes	No	NA	Yes	Less than 8.33%	Less than or equal to 2%	Greater than 48 inches	1	61	59
2991	1/29/2016 Sandt DOT	Concord	Stickney Ave	Parallel	Concrete	Good	No	Yes	No	No	No	No	Yes	No	NA	Yes	Less than 8.33%	Less than or equal to 2%	Greater than 48 inches	1	61	59
2549	11/24/2015 Sandt DOT	Sanbornton	Sanbornton Rest Area	Perpendicular	Concrete	Good	No	Yes	No	No	No	No	Yes	No	NA	Yes	Less than 8.33%	Less than or equal to 2%	Greater than 48 inches	1	61	59
2550	11/24/2015 Sandt DOT	Sanbornton	Sanbornton Rest Area	Perpendicular	Concrete	Good	No	Yes	No	No	No	No	Yes	No	NA	Yes	Less than 8.33%	Less than or equal to 2%	Greater than 48 inches	1	61	59
2551	11/24/2015 Sandt DOT	Sanbornton	Sanbornton Rest Area	Perpendicular	Concrete	Good	No	Yes	No	No	No	No	Yes	No	NA	Yes	Less than 8.33%	Less than or equal to 2%	Greater than 48 inches	1	61	59
2552	11/24/2015 Sandt DOT	Sanbornton	Sanbornton Rest Area	Perpendicular	Concrete	Good	No	Yes	No	No	No	No	Yes	No	NA	Yes	Less than 8.33%	Less than or equal to 2%	Greater than 48 inches	1	61	59
2538	11/23/2015 Sandt DOT	Wolfeboro	Rt 109	Parallel	Concrete	Good	No	Yes	No	No	No	No	Yes	No	NA	Yes	Less than 8.33%	Less than or equal to 2%	Greater than 48 inches	1	61	59
2539	11/23/2015 Sandt DOT	Wolfeboro	Rt 109	Parallel	Concrete	Good	No	Yes	No	No	No	No	Yes	No	NA	Yes	Less than 8.33%	Less than or equal to 2%	Greater than 48 inches	1	61	59
2506	11/5/2015 Sandt DOT	Seabrook	286	Parallel	Concrete	Good	No	Yes	No	No	No	No	Yes	No	NA	Yes	Less than 8.33%	Less than or equal to 2%	Greater than 48 inches	1	61	59
1626	8/28/2015 Sandt DOT	Troy	School Street	Perpendicular	Concrete	Good	No	Yes	No	No	No	No	Yes	No	NA	Yes	Less than 8.33%	Less than or equal to 2%	Greater than 48 inches	1	61	59
2545	11/24/2015 Sandt DOT	Sandwich	Rt 113	Parallel	Concrete	Good	No	No	Yes	No	No	No	Yes	No	NA	Yes	Less than 8.33%	Less than or equal to 2%	36 to 48 inches	1	60	59
2546	11/24/2015 Sandt DOT	Sandwich	Rt 113	Parallel	Concrete	Good	No	No	Yes	No	No	No	Yes	No	NA	Yes	Less than 8.33%	Less than or equal to 2%	36 to 48 inches	1	60	59
2547	11/24/2015 Sandt DOT	Sandwich	Rt 113	Parallel	Concrete	Good	No	No	Yes	No	No	No	Yes	No	NA	Yes	Less than 8.33%	Less than or equal to 2%	36 to 48 inches	1	60	59
2548	11/24/2015 Sandt DOT	Sandwich	Rt 113	Parallel	Concrete	Good	No	No	Yes	No	No	No	Yes	No	NA	Yes	Less than 8.33%	Less than or equal to 2%	36 to 48 inches	1	60	59
2208	10/22/2015 Wilkinson dist 1	Pittsburg	Rte 3	Parallel	Concrete	Fair	Yes	No	Yes	No	No	No	Yes	No	Yes	Yes	Less than 8.33%	Greater than 2%	Greater than 48 inches	1	60	59
1610	8/27/2015 Sandt DOT	Jaffrey	Main Street	Perpendicular	Asphalt	Good	Yes	No	No	No	No	No	Yes	Yes	NA	Yes	10% to 12.5%	Less than or equal to 2%	Greater than 48 inches	1	60	59
1611	8/27/2015 Sandt DOT	Jaffrey	Main Street	Perpendicular	Asphalt	Good	Yes	No	No	No	No	No	Yes	Yes	NA	Yes	10% to 12.5%	Less than or equal to 2%	Greater than 48 inches	1	60	59
1295	7/23/2015 Sandt DOT	Derry	E Broadway	Perpendicular	Asphalt	Good	Yes	No	No	No	No	No	Yes	Yes	NA	Yes	10% to 12.5%	Less than or equal to 2%	Greater than 48 inches	1	60	59
1907	9/30/2015 Sandt Dot	Conway	Main Street	Perpendicular	Concrete	Good	Yes	Yes	No	No	No	No	Yes	Yes	NA	Yes	Greater than 12.5%	Greater than 2%	Greater than 48 inches	1	60	59
2078	10/8/2015 Sandt DOT	Durham	Main Street	Perpendicular	Concrete	Good	Yes	Yes	No	No	No	No	Yes	Yes	NA	Yes	Greater than 12.5%	Greater than 2%	Greater than 48 inches	1	60	59
2715	12/9/2015 Wilkinson District 1	Carroll	Rte. 3	Perpendicular	Concrete	Fair	No	Yes	Yes	No	Yes	No	Yes	No	NA	Yes	8.33% to 10%	Less than or equal to 2%	Greater than 48 inches	1	59	60
2716	12/9/2015 Wilkinson District 1	Carroll	Rte. 3	Perpendicular	Concrete	Fair	No	Yes	Yes	No	Yes	No	Yes	No	NA	Yes	8.33% to 10%	Less than or equal to 2%	Greater than 48 inches	1	59	60

2720	12/9/2015	Nichols district 1	Lancaster	Rte 3	Parallel	Concrete	Good	Yes	No	Yes	No	No	No	Yes	No	No	Yes	Less than 8.33%	Less than or equal to 2%	Greater than 48 inches	1	59	60
3001	2/1/2016	Nichols district 1	Conway	Rte 302/16	Perpendicular	Concrete	Fair	Yes	Yes	Yes	No	No	No	Yes	No	No	Yes	8.33% to 10%	Less than or equal to 2%	Greater than 48 inches	1	59	60
151	6/30/2015	Sandt DOT	Manchester	2nd Street	Parallel	Asphalt	Fair	Yes	No	No	No	No	No	Yes	Yes	NA	Yes	Less than 8.33%	Less than or equal to 2%	36 to 48 inches	1	59	60
329	7/14/2015	Sandt DOT	Hudson	Lowell Road	Perpendicular	Concrete	Fair	Yes	No	No	No	No	No	Yes	Yes	NA	Yes	Less than 8.33%	Less than or equal to 2%	Greater than 48 inches	1	59	60
2079	10/8/2015	Sandt DOT	Durham	Main Street	Diagonal	Concrete	Fair	Yes	No	No	No	No	No	Yes	Yes	Yes	Yes	Less than 8.33%	Less than or equal to 2%	Greater than 48 inches	1	59	60
2963	1/13/2016	Nichols district 1	Woodsville	Rte 302	Parallel	Concrete	Good	Yes	No	No	No	No	No	Yes	NA	NA	Yes	8.33% to 10%	Less than or equal to 2%	Greater than 48 inches	1	59	60
384	7/17/2015	Sandt DOT	Pittsfield	Main Street	Parallel	Brick	Good	Yes	Yes	No	No	No	No	Yes	Yes	NA	Yes	10% to 12.5%	Greater than 2%	Greater than 48 inches	1	58	61
385	7/17/2015	Sandt DOT	Pittsfield	Main Street	Parallel	Brick	Good	Yes	Yes	No	No	No	No	Yes	Yes	NA	Yes	10% to 12.5%	Greater than 2%	Greater than 48 inches	1	58	61
1640	9/1/2015	Sandt DOT	Boscawen	Harris Hill Road	Parallel	Concrete	Good	No	Yes	Yes	No	No	No	Yes	No	NA	Yes	10% to 12.5%	Greater than 2%	Greater than 48 inches	1	57	61
1511	8/14/2015	Sandt DOT	Wilton	Island Street	Parallel	Concrete	Good	No	Yes	Yes	No	No	No	Yes	No	NA	Yes	10% to 12.5%	Greater than 2%	Greater than 48 inches	1	57	61
341	7/15/2015	Sandt DOT	Atkinson	Atkinson Depot Road	Parallel	Concrete	Good	No	Yes	Yes	No	No	No	Yes	No	NA	Yes	10% to 12.5%	Greater than 2%	Greater than 48 inches	1	57	61
1486	8/12/2015	Sandt DOT	Amherst	101A	Parallel	Concrete	Good	No	Yes	Yes	No	No	No	Yes	No	NA	Yes	10% to 12.5%	Greater than 2%	Greater than 48 inches	1	57	61
78	6/22/2015	Sandt DOT	Allenstown	Main	Diagonal	Concrete	Good	No	Yes	Yes	No	No	No	Yes	No	No	Yes	Less than 8.33%	Greater than 2%	Greater than 48 inches	1	57	61
2733	12/10/2015	Sandt DOT	Laconia	Rt 3	Parallel	Concrete	Fair	No	Yes	Yes	No	No	No	Yes	NA	NA	Yes	Greater than 12.5%	Greater than 2%	Greater than 48 inches	1	57	61
2889	1/5/2016	Sandt DOT	Belmont	Rt 140	Diagonal	Concrete	Good	No	Yes	Yes	No	No	No	Yes	No	No	Yes	Less than 8.33%	Greater than 2%	Greater than 48 inches	1	57	61
2682	12/8/2015	Nichols district 1	Lancaster	Rte 2	Parallel	Concrete	Good	No	Yes	Yes	No	No	No	Yes	No	No	Yes	Less than 8.33%	Greater than 2%	Greater than 48 inches	1	57	61
2686	12/8/2015	Nichols district 1	Lancaster	Rte 2	Parallel	Concrete	Good	No	Yes	Yes	No	No	No	Yes	No	No	Yes	Less than 8.33%	Greater than 2%	Greater than 48 inches	1	57	61
1754	9/16/2015	Sandt DOT	Newport	Rt 10	Perpendicular	Brick	Good	Yes	No	No	No	No	No	Yes	Yes	NA	Yes	Less than 8.33%	Less than or equal to 2%	Greater than 48 inches	1	57	61
1756	9/16/2015	Sandt DOT	Newport	Rt 10	Parallel	Brick	Good	Yes	No	No	No	No	No	Yes	Yes	NA	Yes	Less than 8.33%	Less than or equal to 2%	Greater than 48 inches	1	57	61
32			Durham		Perpendicular	Asphalt	Good	No	Yes	No	No	No	No	Yes	No	Yes	Yes	Less than 8.33%	Less than or equal to 2%	Greater than 48 inches	1	57	61
33					Perpendicular	Asphalt	Good	No	Yes	No	No	No	No	Yes	No	Yes	Yes	Less than 8.33%	Less than or equal to 2%	Greater than 48 inches	1	57	61
1471	8/12/2015	Sandt DOT	Nashua	Amherst Street	Perpendicular	Asphalt	Good	No	Yes	No	No	No	No	Yes	No	Yes	Yes	Less than 8.33%	Less than or equal to 2%	Greater than 48 inches	1	57	61
1472	8/12/2015	Sandt DOT	Nashua	Amherst Street	Perpendicular	Asphalt	Good	No	Yes	No	No	No	No	Yes	No	Yes	Yes	Less than 8.33%	Less than or equal to 2%	Greater than 48 inches	1	57	61
42	6/15/2015	Sandt DOT	Pembroke	Pembroke Road	Parallel	Asphalt	Good	No	Yes	No	No	No	No	Yes	No	NA	Yes	Less than 8.33%	Less than or equal to 2%	Greater than 48 inches	1	57	61
44	6/15/2015	Sandt DOT	Pembroke	Pembroke Road	Parallel	Asphalt	Good	No	Yes	No	No	No	No	Yes	No	NA	Yes	Less than 8.33%	Less than or equal to 2%	Greater than 48 inches	1	57	61
310	7/13/2015	Sandt DOT	Nashua	East Dunstable Road	Perpendicular	Asphalt	Good	No	Yes	No	No	No	No	Yes	No	NA	Yes	Less than 8.33%	Less than or equal to 2%	Greater than 48 inches	1	57	61
2310	10/27/2015	Sandt DOT	Hampton	Ocean Blvd	Parallel	Asphalt	Good	No	Yes	No	No	No	No	Yes	No	NA	Yes	Less than 8.33%	Less than or equal to 2%	Greater than 48 inches	1	57	61
2311	10/27/2015	Sandt DOT	Hampton	Ocean Blvd	Parallel	Asphalt	Good	No	Yes	No	No	No	No	Yes	No	NA	Yes	Less than 8.33%	Less than or equal to 2%	Greater than 48 inches	1	57	61
2022	10/6/2015	Sandt DOT	Dover	Knox Marsh Road	Perpendicular	Asphalt	Good	No	Yes	No	No	No	No	Yes	No	NA	Yes	Less than 8.33%	Less than or equal to 2%	Greater than 48 inches	1	57	61
2025	10/6/2015	Sandt DOT	Dover	Knox Marsh Road	Perpendicular	Asphalt	Good	No	Yes	No	No	No	No	Yes	No	NA	Yes	Less than 8.33%	Less than or equal to 2%	Greater than 48 inches	1	57	61
2026	10/6/2015	Sandt DOT	Dover	Knox Marsh Road	Perpendicular	Asphalt	Good	No	Yes	No	No	No	No	Yes	No	NA	Yes	Less than 8.33%	Less than or equal to 2%	Greater than 48 inches	1	57	61
2027	10/6/2015	Sandt DOT	Dover	Knox Marsh Road	Perpendicular	Asphalt	Good	No	Yes	No	No	No	No	Yes	No	NA	Yes	Less than 8.33%	Less than or equal to 2%	Greater than 48 inches	1	57	61
2028	10/6/2015	Sandt DOT	Dover	Knox Marsh Road	Perpendicular	Asphalt	Good	No	Yes	No	No	No	No	Yes	No	NA	Yes	Less than 8.33%	Less than or equal to 2%	Greater than 48 inches	1	57	61
2029	10/6/2015	Sandt DOT	Dover	Knox Marsh Road	Perpendicular	Asphalt	Good	No	Yes	No	No	No	No	Yes	No	NA	Yes	Less than 8.33%	Less than or equal to 2%	Greater than 48 inches	1	57	61
2030	10/6/2015	Sandt DOT	Dover	Knox Marsh Road	Perpendicular	Asphalt	Good	No	Yes	No	No	No	No	Yes	No	NA	Yes	Less than 8.33%	Less than or equal to 2%	Greater than 48 inches	1	57	61
2032	10/6/2015	Sandt DOT	Dover	Knox Marsh Road	Perpendicular	Asphalt	Good	No	Yes	No	No	No	No	Yes	No	NA	Yes	Less than 8.33%	Less than or equal to 2%	Greater than 48 inches	1	57	61
2037	10/6/2015	Sandt DOT	Dover	Knox Marsh Road	Parallel	Asphalt	Good	No	Yes	No	No	No	No	Yes	No	NA	Yes	Less than 8.33%	Less than or equal to 2%	Greater than 48 inches	1	57	61
1789	9/22/2015	Sandt DOT	Epping	Rt 125	Perpendicular	Asphalt	Good	No	Yes	No	No	No	No	Yes	No	NA	Yes	Less than 8.33%	Less than or equal to 2%	Greater than 48 inches	1	57	61
1790	9/22/2015	Sandt DOT	Epping	Rt 125	Parallel	Asphalt	Good	No	Yes	No	No	No	No	Yes	No	NA	Yes	Less than 8.33%	Less than or equal to 2%	Greater than 48 inches	1	57	61
337	7/14/2015	Sandt DOT	Hudson	Derry Street	Perpendicular	Asphalt	Good	No	Yes	No	No	No	No	Yes	No	NA	Yes	Less than 8.33%	Less than or equal to 2%	Greater than 48 inches	1	57	61
293	7/13/2015	Sandt DOT	Nashua	East Dunstable Road	Parallel	Asphalt	Good	No	Yes	No	No	No	No	Yes	No	NA	Yes	Less than 8.33%	Less than or equal to 2%	Greater than 48 inches	1	57	61
35					Parallel	Asphalt	Good	No	Yes	No	No	No	No	Yes	No	Yes	Yes	Less than 8.33%	Less than or equal to 2%	Greater than 48 inches	1	57	61
4078	3/8/2016	Sandt DOT	Boscawen	Rt 4	Parallel	Asphalt	Good	No	Yes	No	No	No	No	Yes	No	NA	Yes	Less than 8.33%	Less than or equal to 2%	Greater than 48 inches	1	57	61
2502	11/5/2015	Sandt DOT	Seabrook	286	Parallel	Asphalt	Good	No	Yes	No	No	No	No	Yes	No	NA	Yes	Less than 8.33%	Less than or equal to 2%	Greater than 48 inches	1	57	61
2504	11/5/2015	Sandt DOT	Seabrook	286	Parallel	Asphalt	Good	No	Yes	No	No	No	No	Yes	No	NA	Yes	Less than 8.33%	Less than or equal to 2%	Greater than 48 inches	1	57	61
2505	11/5/2015	Sandt DOT	Seabrook	286	Parallel	Asphalt	Good	No	Yes	No	No	No	No	Yes	No	NA	Yes	Less than 8.33%	Less than or equal to 2%	Greater than 48 inches	1	57	61
2113	10/14/2015	Sandt DOT	Portsmouth	Rt 1	Parallel	Asphalt	Good	No	Yes	No	No	No	No	Yes	No	NA	Yes	Less than 8.33%	Less than or equal to 2%	Greater than 48 inches	1	57	61
2126	10/14/2015	Sandt DOT	Portsmouth	Rt 1	Parallel	Asphalt	Good	No	Yes	No	No	No	No	Yes	No	NA	Yes	Less than 8.33%	Less than or equal to 2%	Greater than 48 inches	1	57	61
4075	3/7/2016	Sandt DOT	Swanzey	Rt 12	Perpendicular	Concrete	Good	No	No	Yes	No	No	No	Yes	No	NA	Yes	Less than 8.33%	Less than or equal to 2%	Greater than 48 inches	1	56	62
4140	3/18/2016	Sandt DOT	Plaistow	Rt 125	Perpendicular	Concrete	Good	No	No	Yes	No	No	No	Yes	No	NA	Yes	Less than 8.33%	Less than or equal to 2%	Greater than 48 inches	1	56	62
2835	12/22/2015	Wilkinson District 1	Warren	Rte.118	Parallel	Concrete	Fair	No	Yes	Yes	No	No	No	Yes	No	NA	Yes	Less than 8.33%	Greater than 2%	36 to 48 inches	1	56	62
125	6/26/2015	MC SWRPC	North Walpole	Russell Street	Perpendicular	Concrete	Good	No	No	Yes	No	No	No	Yes	Yes	NA	Yes	8.33% to 10%	Greater than 2%	36 to 48 inches	1	56	62
1370	7/24/2015	Sandt DOT	Auburn	Manchester Road	Parallel	Concrete	Good	No	Yes	Yes	No	No	Yes	Yes	No	NA	Yes	Less than 8.33%	Less than or equal to 2%	Greater than 48 inches	1	56	62
1371	7/24/2015	Sandt DOT	Auburn	Manchester Road	Parallel	Concrete	Good	No	Yes	Yes	No	No	Yes	Yes	No	NA	Yes	Less than 8.33%	Less than or equal to 2%	Greater than 48 inches	1	56	62
1372	7/24/2015	Sandt DOT	Auburn	Manchester Road	Parallel	Concrete	Good	No	Yes	Yes	No	No	Yes	Yes	No	NA	Yes	Less than 8.33%	Less than or equal to 2%	Greater than 48 inches	1	56	62
1373	7/24/2015	Sandt DOT	Auburn	Manchester Road	Parallel	Concrete	Good	No	Yes	Yes	No	No	Yes	Yes	No	NA	Yes	Less than 8.33%	Less than or equal to 2%	Greater than 48 inches	1	56	62
1374	7/24/2015	Sandt DOT	Auburn	Manchester Road	Parallel	Concrete	Good	No	Yes	Yes	No	No	Yes	Yes	No	NA	Yes	Less than 8.33%	Less than or equal to 2%	Greater than 48 inches	1	56	62
1375	7/24/2015	Sandt DOT	Auburn	Manchester Road	Parallel	Concrete	Good	No	Yes	Yes	No	No	Yes	Yes	No	NA	Yes	Less than 8.33%	Less than or equal to 2%	Greater than 48 inches	1	56	62
75	6/22/2015	Sandt DOT	Allenstown	Main	Parallel	Concrete	Good	No	Yes	Yes	No	No	Yes	Yes	No	NA	Yes	Less than 8.33%	Less than or equal to 2%	Greater than 48 inches	1	56	62
1560	8/18/2015	Sandt DOT	Peterborough	202	Parallel	Concrete	Good	No	Yes	Yes	No	No	Yes	Yes	No	NA	Yes	Less than 8.33%	Less than or equal to 2%	Greater than 48 inches	1	56	62
1301	7/23/2015	Sandt DOT	Derry	E Broadway	Diagonal	Asphalt	Good	Yes	Yes	No	No	No	No	Yes	Yes	Yes	Yes	Greater than 12.5%	Greater than 2%	Greater than 48 inches	1	56	62
1303	7/23/2015	Sandt DOT	Derry	E Broadway	Diagonal	Asphalt	Good	Yes	Yes	No	No	No	No	Yes	Yes	Yes	Yes	Greater than 12.5%	Greater than 2%	Greater than 48 inches	1	56	62
1305	7/23/2015	Sandt DOT	Derry	E Broadway	Diagonal	Asphalt	Good	Yes	Yes	No	No	No	No	Yes	Yes	Yes	Yes	Greater than 12.5%	Greater than 2%	Greater than 48 inches	1	56	62
1310	7/23/2015	Sandt DOT	Derry	E Broadway	Diagonal	Asphalt	Good	Yes	Yes	No	No	No	No	Yes	Yes	Yes	Yes	Greater than 12.5%	Greater than 2%	Greater than 48 inches	1	56	62
1311	7/23/2015	Sandt DOT	Derry	E Broadway	Diagonal	Asphalt	Good	Yes	Yes	No	No	No	No	Yes	Yes	Yes	Yes	Greater than 12.5%	Greater than 2%	Greater than 48 inches	1	56	62
1315	7/23/2015	Sandt DOT	Derry	E Broadway	Diagonal	Asphalt	Good	Yes	Yes	No	No	No	No	Yes	Yes	Yes	Yes	Greater than 12.5%	Greater than 2%	Greater than 48 inches	1	56	62
271	7/10/2015	Sandt DOT	Nashua	Dunstable Road	Diagonal	Asphalt	Good	Yes	Yes	No	No	No	No	Yes	Yes	Yes	Yes	Greater than 12.5%	Greater than 2%	Greater than 48 inches	1	56	62
49	6/15/2015	Sandt DOT	Pembroke	Academy Road	Perpendicular	Asphalt	Good	Yes	Yes	No	No	No	No	Yes	Yes	NA	Yes	Greater than 12.5%	Greater than 2%	Greater than 48 inches	1	56	62
1323	7/23/2015	Sandt DOT	Derry	S Main St.	Parallel	Asphalt	Good	Yes	Yes	No	No	No	No	Yes	Yes	NA	Yes	Greater than 12.5%	Greater than 2%	Greater than 48 inches	1	56	62
1324	7/23/2015	Sandt DOT	Derry	S Main St.	Parallel	Asphalt	Good	Yes	Yes	No	No	No	No	Yes	Yes	NA	Yes	Greater than 12.5%	Greater than 2%	Greater than 48 inches	1	56	62
1325	7/23/2015	Sandt DOT	Derry	S Main St.	Parallel	Asphalt	Good	Yes	Yes	No	No	No	No	Yes	Yes	NA	Yes	Greater than 12.5%	Greater than 2%	Greater than 48 inches	1	56	62
2759	12/14/2015	Patch district 1	Littleton	Rte 302	Perpendicular	Concrete	Fair	Yes	No	Yes	No	No	No	Yes	Yes	Yes	Yes	10% to 12.5%	Greater than 2%	Greater than 48 inches	1	55	63
2760	12/14/2015	Patch district 1	Littleton	Rte 302	Perpendicular	Concrete	Good	Yes	No	Yes	No	No	No	Yes	Yes	NA	Yes	Greater than 12.5%	Greater than 2%	Greater than 48 inches	1	55	63
2995	2/1/2016	Nichols district 1	Conway	Rte 302/16	Combined	Concrete	Fair	Yes	Yes	Yes	No	No	No	Yes	No	No	Yes	Less than 8.33%	Greater than 2%	Greater than 48 inches	1	55	63
2997	2/1/2016	Nichols district 1	Conway	Rte 302/16	Combined	Concrete	Good	Yes	Yes	Yes	No	No	No	Yes	No	No	Yes	8.33% to 10%	Greater than 2%	Greater than 48 inches	1	55	63
2999	2/1/2016	Nichols district 1	Conway	Rte 302/16	Combined	Concrete	Fair	Yes	Yes	Yes	No	No	No	Yes	No	No	Yes	Less than 8.33%	Greater than 2%	Greater than 48 inches	1	55	63
3000	2/1/2016	Nichols district 1	Conway	Rte 302/16	Combined	Concrete	Fair	Yes	Yes	Yes	No	No	No	Yes	No	No	Yes	Less than 8.33%	Greater than 2%	Greater than 48 inches	1	55	63
2689	12/8/2015	Nichols district 1	Lancaster	Rte 2 and Rte 3	Parallel	Concrete	Good	Yes	Yes	Yes	No	No	No	Yes	No	No	Yes	8.33% to 10%	Greater than 2%	Greater than 48 inches	1	55	63
2295	10/27/2015	Sandt DOT	Hampton	High Street	Perpendicular	Asphalt	Fair	Yes	No	No	No	No	No	Yes	Yes	NA	Yes	Less than 8.33%	Less than or equal to 2%	Greater than 48 inches	1	55	63
1448	8/10/2015	Sandt DOT	Hillsborough	W Main Street	Diagonal	Asphalt	Fair	Yes	No	No	No	No	No	Yes	Yes	Yes	Yes	Less than 8.33%	Less than or equal to 2%	Greater than 48 inches	1	55	63
1449	8/10/2015	Sandt DOT	Hillsborough	W Main Street	Diagonal	Asphalt	Fair	Yes	No	No	No	No	No	Yes	Yes	Yes	Yes	Less than 8.33%	Less than or equal to 2%	Greater than 48 inches	1	55	63
150	6/30/2015	Sandt DOT	Manchester	2nd Street	Diagonal	Asphalt	Fair	Yes	No	No	No	No	No	Yes	Yes	Yes	Yes	Less than 8.33%	Less than or equal to 2%	Greater than 48 inches	1	55	63
2969	1/25/2016	Nichols district 1	Jackson	Rte 16A	Parallel	Concrete	Fair	No	Yes	No	No	No	No	Yes	NA	NA	Yes	Less than 8.33%	Less than or equal to 2%	36 to 48 inches	1	55	63
48	6/15/2015	Sandt DOT	Pembroke	Academy Road	Perpendicular	Asphalt	Fair	Yes	Yes	No	No	No	Yes	Yes	Yes	NA	Yes	Less than 8.33%	Less than or equal to 2%	Greater than 48 inches	1	55	63
1807	9/22/2015	Sandt DOT	Epping	Water Street	Diagonal	Brick	Good	No	Yes	Yes	No	No	No	Yes	Yes	NA	Yes	Less than 8.33%	Greater than 2%	Greater than 48 inches	1	55	63
2205	10/21/2015	Wilkinson dist 1	Pittsburg	Rte 145	Parallel	Concrete	Fair	Yes	No	Yes	No	No	No	Yes	No	Yes	Yes	Less than 8.33%	Less than or equal to 2%	Greater than 48 inches	1	54	63
2206	10/21/2015	Wilkinson District1	Pittsburg	Rte. 145	Parallel	Concrete	Fair	Yes	No	Yes	No	No	No	Yes	No	Yes	Yes	Less than 8.33%	Less than or equal to 2%	Greater than 48 inches	1	54	63
2207	10/21/2015	Wilkinson district 1	Pittsburg	Rte. 145	Parallel	Concrete	Fair	Yes	No	Yes	No	No	No	Yes	No	Yes	Yes	Less than 8.33%	Less than or equal to 2%	Greater than 48 inches	1	54	63
2982	1/26/2016	Nichols district 1	Conway	Rte 302/16	Combined	Concrete	Good	Yes	Yes	No	No	No	No	Yes	NA	NA	Yes	10% to 12.5%	Greater than 2%	36 to 48 inches	1	54	63
1836	9/24/2015	Sandt DOT	Enfield	Main	Parallel	Stamped Asphalt	Good	Yes	Yes	No	No	No	No	Yes	Yes	NA	Yes	10% to 12.5%	Greater than 2%	Greater than 48 inches	1	54	63
2245	10/23/2015	Sandt DOT	Newmarket	Exeter Road	Diagonal	Concrete	Fair	Yes	Yes	No	No	No	No	Yes	Yes	NA	Yes	10% to 12.5%	Less than or equal to 2%	Greater than 48 inches	1	54	63
1453	8/10/2015	Sandt DOT	Hillsborough	W Main Street	Perpendicular	Concrete	Poor	Yes	Yes	No	No	No	No	Yes	Yes	Yes	Yes	Less than 8.33%	Less than or equal to 2%	Greater than 48 inches	1	54	63
2072	10/8/2015	Sandt DOT	Durham	Main Street	Diagonal	Concrete	Poor	Yes	Yes	No	No	No	No	Yes	Yes	Yes	Yes	Less than 8.33%	Less than or equal to 2%	Greater than 48 inches	1	54	63
4110	3/16/2016	Sandt DOT	Plaistow	Rt 125	Parallel	Concrete	Good	Yes	Yes	No	No	No	No	Yes	Yes	Yes	Yes	10% to 12.5%	Greater than 2%	36 to 48 inches	1	54	63
5134	3/23/2016	Sandt DOT	Plaistow	Rt 125	Diagonal	Concrete	Good	Yes	No	Yes	No	Yes	Yes	Yes	Yes	Yes	Yes	Less than 8.33%	Greater than 2%	Greater than 48 inches	1	53	64
2718	12/9/2015	Nichols district 1	Lancaster	Rte 2 and Rte 3	Parallel	Concrete	Good	Yes	Yes	Yes	No	No	No	Yes	No	No	Yes	8.33% to 10%	Less than or equal to 2%	36 to 48 inches	1	53	64
1580	8/20/2015	Sandt DOT	Peterborough	Grove Street	Perpendicular	Concrete	Good	Yes	Yes	No	No	Yes	No	Yes	Yes	NA	Yes	10% to 12.5%	Greater than 2%	Greater than 48 inches	1	53	64
2984	1/27/2016	Nichols district 1	Conway	Rte 302/16	Parallel	Concrete	Good	Yes	Yes	No	No	Yes	No	Yes	NA	NA	Yes	10% to 12.5%	Greater than 2%	Greater than 48 inches	1	53	64
278	7/13/2015	Sandt DOT	Nashua	Main Street	Diagonal	Concrete	Good	Yes	Yes	No	No	No	No	Yes	No	Yes	Yes	Less than 8.33%	Less than or equal to 2%	36 to 48 inches	1	53	64
316	7/13/2015	Sandt DOT	Nashua	Main Street	Diagonal	Concrete	Good	Yes	Yes	No	No	No	No	Yes	No	Yes	Yes	Less than 8.33%	Less than or equal to 2%	36 to 48 inches	1	53	64
317	7/13/2015	Sandt DOT	Nashua	Main Street	Perpendicular	Concrete	Good	Yes	Yes	No	No	No	No	Yes	No	Yes	Yes	Less than 8.33%	Less than or equal to 2%	36 to 48 inches	1	53	64
1404	7/31/2015	Sandt DOT	Warner	W Main Street	Diagonal	Brick	Good	Yes	Yes	No	No	No	No	Yes	Yes	NA	Yes	8.33% to 10%	Greater than 2%	Greater than 48 inches	1	53	64
1750	9/16/2015	Sandt DOT	Newport	Rt 10	Parallel	Brick	Good	Yes	Yes	No	No	No	No	Yes	Yes	NA	Yes	10% to 12.5%	Less than or equal to 2%	Greater than 48 inches	1	52	65
1400	7/31/2015	Sandt DOT	Warner	W Main Street	Diagonal	Brick	Good	Yes	Yes	No	No	No	No	Yes	Yes	NA	Yes	10% to 12.5%	Less than or equal to 2%	Greater than 48 inches	1	52	65
1401	7/31/2015	Sandt DOT	Warner	E Main Street	Diagonal	Brick	Good	Yes	Yes	No	No	No	No	Yes	Yes	NA	Yes	10% to 12.5%	Less than or equal to 2%	Greater than 48 inches	1	52	65
2762	12/14/2015	Patch district 1	Littleton	Rte 302	Parallel	Concrete	Good	No	No	Yes	No	No	No	Yes	NA	NA	Yes	10% to 12.5%	Less than or equal to 2%	Greater than 48 inches	1	51	65
2591	11/30/2015	Sandt DOT	Concord	Rt 13	Parallel	Concrete	Good	No	No	Yes	No	No	No	Yes	NA	NA	Yes	10% to 12.5%	Less than or equal to 2%	Greater than 48 inches	1	51	65
2593	11/30/2015	Sandt DOT	Concord	Rt 13	Parallel	Concrete	Good	No	No	Yes	No	No	No	Yes	NA	NA	Yes	10% to 12.5%	Less than or equal to 2%	Greater than 48 inches	1	51	65
1919	10/1/2015	Sandt DOT	Rochester	N Main	Parallel	Concrete	Good	No	Yes	Yes	No	No	No	Yes	No	NA	Yes	10% to 12.5%	Less than or equal to 2%	Greater than 48 inches	1	51	65
2813	12/17/2015	Wilkinson District 1	Warren	Rte.118	Parallel	Concrete	Good	No	Yes	Yes	No	No	No	Yes	No	NA	Yes	10% to 12.5%	Less than or equal to 2%	Greater than 48 inches	1	51	65
2685	12/8/2015	Nichols district 1	Lancaster	Rte 2	Parallel	Concrete	Good	No	Yes	Yes	No	No	No	Yes	No	No	Yes	Less than 8.33%	Less than or equal to 2%	Greater than 48 inches	1	51	65
2415	11/2/2015	Nichols district 1	Colebrook	Rte 26	Parallel	Concrete	Good	No	Yes	Yes	No	No	No	Yes	No	No	Yes	Less than 8.33%	Less than or equal to 2%	Greater than 48 inches	1	51	65
2470	11/2/2015	Sandt DOT	Seabrook	286	Perpendicular	Concrete	Good	No	Yes	No	No	No	No	Yes	NA	NA	Yes	8.33% to 10%	Less than or equal to 2%	Greater than 48 inches	1	51	65

2817	12/17/2015	Wilkinson District 1	Warren	Rte.118	Parallel	Concrete	Good	No	Yes	Yes	No	No	No	Yes	No	NA	Yes	8.33% to 10%	Less than or equal to 2%	36 to 48 inches	1	50	66
1531	8/17/2015	Sandt DOT	Antrim	Main Street	Parallel	Asphalt	Good	Yes	Yes	No	No	No	No	Yes	Yes	NA	Yes	Greater than 12.5%	Less than or equal to 2%	Greater than 48 inches	1	50	66
2102	10/14/2015	Sandt DOT	Portsmouth	Rt 1	Perpendicular	Asphalt	Good	Yes	Yes	No	No	No	No	Yes	Yes	NA	Yes	Greater than 12.5%	Less than or equal to 2%	Greater than 48 inches	1	50	66
1535	8/17/2015	Sandt DOT	Antrim	Main Street	Perpendicular	Asphalt	Good	Yes	Yes	No	No	No	No	Yes	Yes	NA	Yes	Greater than 12.5%	Less than or equal to 2%	Greater than 48 inches	1	50	66
22	6/12/2015	Sandt DOT	Concord	Noble Drive	Parallel	Concrete	Good	Yes	Yes	No	No	No	No	Yes	Yes	NA	Yes	10% to 12.5%	Greater than 2%	Greater than 48 inches	1	50	66
2863	12/28/2015	Sandt DOT	Meredith	Rt 3	Perpendicular	Asphalt	Poor	Yes	Yes	No	No	No	No	Yes	Yes	NA	Yes	Less than 8.33%	Less than or equal to 2%	Greater than 48 inches	1	50	66
2665	12/7/2015	Sandt DOT	New Hampton	132	Perpendicular	Asphalt	Good	Yes	Yes	No	No	No	No	Yes	Yes	NA	Yes	Greater than 12.5%	Less than or equal to 2%	Greater than 48 inches	1	50	66
2668	12/7/2015	Sandt DOT	New Hampton	132	Perpendicular	Asphalt	Good	Yes	Yes	No	No	No	No	Yes	Yes	NA	Yes	Greater than 12.5%	Less than or equal to 2%	Greater than 48 inches	1	50	66
4019	2/18/2016	Nichols district 1	Conway	Rte 16/113	Perpendicular	Concrete	Good	Yes	Yes	Yes	No	No	No	Yes	No	No	Yes	8.33% to 10%	Less than or equal to 2%	Greater than 48 inches	1	49	67
4020	2/18/2016	Nichols district 1	Conway	Rte 16/113	Perpendicular	Concrete	Good	Yes	Yes	Yes	No	No	No	Yes	No	No	Yes	8.33% to 10%	Less than or equal to 2%	Greater than 48 inches	1	49	67
3010	2/4/2016	Nichols district 1	Conway	Rte 302/16	Parallel	Concrete	Good	Yes	Yes	Yes	No	No	No	Yes	No	No	Yes	8.33% to 10%	Less than or equal to 2%	Greater than 48 inches	1	49	67
2062	10/8/2015	Sandt DOT	Durham	Main Street	Parallel	Concrete	Good	Yes	No	No	No	No	No	Yes	Yes	NA	Yes	Less than 8.33%	Less than or equal to 2%	Greater than 48 inches	1	49	67
2080	10/8/2015	Sandt DOT	Durham	Main Street	Perpendicular	Concrete	Good	Yes	No	No	No	No	No	Yes	Yes	NA	Yes	Less than 8.33%	Less than or equal to 2%	Greater than 48 inches	1	49	67
2081	10/8/2015	Sandt DOT	Durham	Main Street	Perpendicular	Concrete	Good	Yes	No	No	No	No	No	Yes	Yes	NA	Yes	Less than 8.33%	Less than or equal to 2%	Greater than 48 inches	1	49	67
2084	10/8/2015	Sandt DOT	Durham	Newington Road	Perpendicular	Concrete	Good	Yes	No	No	No	No	No	Yes	Yes	NA	Yes	Less than 8.33%	Less than or equal to 2%	Greater than 48 inches	1	49	67
2085	10/8/2015	Sandt DOT	Durham	Newington Road	Diagonal	Concrete	Good	Yes	No	No	No	No	No	Yes	Yes	NA	Yes	Less than 8.33%	Less than or equal to 2%	Greater than 48 inches	1	49	67
2086	10/8/2015	Sandt DOT	Durham	Newington Road	Parallel	Concrete	Good	Yes	No	No	No	No	No	Yes	Yes	NA	Yes	Less than 8.33%	Less than or equal to 2%	Greater than 48 inches	1	49	67
2087	10/8/2015	Sandt DOT	Durham	Newington Road	Parallel	Concrete	Good	Yes	No	No	No	No	No	Yes	Yes	NA	Yes	Less than 8.33%	Less than or equal to 2%	Greater than 48 inches	1	49	67
2058	10/8/2015	Sandt DOT	Durham	Main Street	Perpendicular	Concrete	Good	Yes	No	No	No	No	No	Yes	Yes	NA	Yes	Less than 8.33%	Less than or equal to 2%	Greater than 48 inches	1	49	67
2063	10/8/2015	Sandt DOT	Durham	Main Street	Parallel	Concrete	Good	Yes	No	No	No	No	No	Yes	Yes	NA	Yes	Less than 8.33%	Less than or equal to 2%	Greater than 48 inches	1	49	67
2070	10/8/2015	Sandt DOT	Durham	Main Street	Parallel	Concrete	Good	Yes	No	No	No	No	No	Yes	Yes	NA	Yes	Less than 8.33%	Less than or equal to 2%	Greater than 48 inches	1	49	67
324	7/13/2015	Sandt DOT	Nashua	Main Street	Perpendicular	Concrete	Good	Yes	Yes	No	No	No	No	Yes	No	Yes	Yes	Less than 8.33%	Less than or equal to 2%	Greater than 48 inches	1	49	67
325	7/13/2015	Sandt DOT	Nashua	Main Street	Perpendicular	Concrete	Good	Yes	Yes	No	No	No	No	Yes	No	Yes	Yes	Less than 8.33%	Less than or equal to 2%	Greater than 48 inches	1	49	67
326	7/13/2015	Sandt DOT	Nashua	Main Street	Perpendicular	Concrete	Good	Yes	Yes	No	No	No	No	Yes	No	Yes	Yes	Less than 8.33%	Less than or equal to 2%	Greater than 48 inches	1	49	67
1406	7/31/2015	Sandt DOT	Henniker	Bridge Street	Perpendicular	Concrete	Good	Yes	Yes	No	No	No	No	Yes	No	NA	Yes	Less than 8.33%	Less than or equal to 2%	Greater than 48 inches	1	49	67
1408	7/31/2015	Sandt DOT	Henniker	Bridge Street	Parallel	Concrete	Good	Yes	Yes	No	No	No	No	Yes	No	NA	Yes	Less than 8.33%	Less than or equal to 2%	Greater than 48 inches	1	49	67
318	7/13/2015	Sandt DOT	Nashua	Main Street	Diagonal	Concrete	Good	Yes	Yes	No	No	No	No	Yes	No	Yes	Yes	Less than 8.33%	Less than or equal to 2%	Greater than 48 inches	1	49	67
320	7/13/2015	Sandt DOT	Nashua	Main Street	Perpendicular	Concrete	Good	Yes	Yes	No	No	No	No	Yes	No	Yes	Yes	Less than 8.33%	Less than or equal to 2%	Greater than 48 inches	1	49	67
321	7/13/2015	Sandt DOT	Nashua	Main Street	Perpendicular	Concrete	Good	Yes	Yes	No	No	No	No	Yes	No	Yes	Yes	Less than 8.33%	Less than or equal to 2%	Greater than 48 inches	1	49	67
1779	9/21/2015	Sandt DOT	Lebanon	Lebanon Rest Area	Combined	Concrete	Good	Yes	Yes	No	No	No	No	Yes	No	NA	Yes	Less than 8.33%	Less than or equal to 2%	Greater than 48 inches	1	49	67
282	7/13/2015	Sandt DOT	Nashua	East Dunstable Road	Parallel	Concrete	Good	Yes	Yes	No	No	No	No	Yes	No	NA	Yes	Less than 8.33%	Less than or equal to 2%	Greater than 48 inches	1	49	67
284	7/13/2015	Sandt DOT	Nashua	East Dunstable Road	Parallel	Concrete	Good	Yes	Yes	No	No	No	No	Yes	No	NA	Yes	Less than 8.33%	Less than or equal to 2%	Greater than 48 inches	1	49	67
292	7/13/2015	Sandt DOT	Nashua	East Dunstable Road	Parallel	Concrete	Good	Yes	Yes	No	No	No	No	Yes	No	NA	Yes	Less than 8.33%	Less than or equal to 2%	Greater than 48 inches	1	49	67
1273	7/22/2015	Sandt DOT	Derry	W Broadway	Parallel	Stamped Asphalt	Good	Yes	Yes	No	No	No	No	Yes	Yes	NA	Yes	8.33% to 10%	Greater than 2%	Greater than 48 inches	1	49	67
1274	7/22/2015	Sandt DOT	Derry	W Broadway	Diagonal	Stamped Asphalt	Good	Yes	Yes	No	No	No	No	Yes	Yes	NA	Yes	8.33% to 10%	Greater than 2%	Greater than 48 inches	1	49	67
1235	7/20/2015	Sandt DOT	Epsom	Dover Road	Parallel	Concrete	Good	Yes	Yes	No	No	No	No	Yes	No	NA	Yes	Less than 8.33%	Less than or equal to 2%	Greater than 48 inches	1	49	67
2486	11/10/2015	NM SWRPC	Hinsdale	Main St	Perpendicular	Concrete	Good	Yes	Yes	No	No	No	No	Yes	No	NA	Yes	Less than 8.33%	Less than or equal to 2%	Greater than 48 inches	1	49	67
2487	11/10/2015	NM SWRPC	Hinsdale	Main St	Parallel	Concrete	Good	Yes	Yes	No	No	No	No	Yes	No	NA	Yes	Less than 8.33%	Less than or equal to 2%	Greater than 48 inches	1	49	67
2988	1/27/2016	Nichols district 1	Conway	Rte 302/16	Combined	Concrete	Fair	Yes	Yes	No	No	Yes	No	Yes	NA	NA	Yes	Less than 8.33%	Greater than 2%	Greater than 48 inches	1	48	67
2989	1/27/2016	Nichols district 1	Conway	Rte 302/16	Combined	Concrete	Fair	Yes	Yes	No	No	Yes	No	Yes	NA	NA	Yes	Less than 8.33%	Greater than 2%	Greater than 48 inches	1	48	67
1266	7/22/2015	Sandt DOT	Derry	W Broadway	Parallel	Stamped Asphalt	Good	Yes	Yes	No	No	No	No	Yes	Yes	NA	Yes	10% to 12.5%	Less than or equal to 2%	Greater than 48 inches	1	48	67
1267	7/22/2015	Sandt DOT	Derry	W Broadway	Parallel	Stamped Asphalt	Good	Yes	Yes	No	No	No	No	Yes	Yes	NA	Yes	10% to 12.5%	Less than or equal to 2%	Greater than 48 inches	1	48	67
1276	7/22/2015	Sandt DOT	Derry	W Broadway	Perpendicular	Stamped Asphalt	Good	Yes	Yes	No	No	No	No	Yes	Yes	NA	Yes	10% to 12.5%	Less than or equal to 2%	Greater than 48 inches	1	48	67
2700	12/9/2015	Sandt DOT	Mont Vernon	Rt 13	Parallel	Concrete	Good	No	Yes	Yes	No	No	No	Yes	NA	NA	Yes	Greater than 12.5%	Greater than 2%	Greater than 48 inches	1	47	68
2596	11/30/2015	Sandt DOT	Concord	Rt 13	Parallel	Concrete	Good	No	No	Yes	No	No	No	Yes	NA	NA	Yes	8.33% to 10%	Less than or equal to 2%	Greater than 48 inches	1	46	69
2833	12/22/2015	Wilkinson District 1	Warren	Rte.118	Parallel	Concrete	Good	No	Yes	Yes	No	No	No	Yes	No	NA	Yes	Less than 8.33%	Greater than 2%	36 to 48 inches	1	46	69
2834	12/22/2015	Wilkinson District 1	Warren	Rte.118	Parallel	Concrete	Good	No	Yes	Yes	No	No	No	Yes	No	NA	Yes	Less than 8.33%	Greater than 2%	36 to 48 inches	1	46	69
2836	12/22/2015	Wilkinson District 1	Warren	Rte.118	Parallel	Concrete	Good	No	Yes	Yes	No	No	No	Yes	No	NA	Yes	Less than 8.33%	Greater than 2%	36 to 48 inches	1	46	69
2837	12/22/2015	Wilkinson District 1	Warren	Rte.118	Parallel	Concrete	Good	No	Yes	Yes	No	No	No	Yes	No	NA	Yes	Less than 8.33%	Greater than 2%	36 to 48 inches	1	46	69
2838	12/22/2015	Wilkinson District 1	Warren	Rte.118	Parallel	Concrete	Good	No	Yes	Yes	No	No	No	Yes	No	NA	Yes	Less than 8.33%	Greater than 2%	36 to 48 inches	1	46	69
2818	12/17/2015	Wilkinson District 1	Warren	Rte.118	Parallel	Concrete	Good	No	Yes	Yes	No	No	No	Yes	No	NA	Yes	Less than 8.33%	Greater than 2%	36 to 48 inches	1	46	69
1388	7/30/2015	Sandt DOT	Brookline	Bond Street	Parallel	Concrete	Good	No	Yes	Yes	No	No	No	Yes	No	NA	Yes	Less than 8.33%	Greater than 2%	36 to 48 inches	1	46	69
106	6/26/2015	Sandt DOT	Manchester	Daniel Webster Hwy	Parallel	Concrete	Fair	No	Yes	Yes	No	No	No	Yes	No	NA	Yes	Less than 8.33%	Less than or equal to 2%	Greater than 48 inches	1	46	69
29	6/12/2015	Sandt DOT	Concord	Noble Drive	Parallel	Concrete	Fair	No	Yes	Yes	No	No	No	Yes	No	NA	Yes	Less than 8.33%	Less than or equal to 2%	Greater than 48 inches	1	46	69
1634	8/28/2015	Sandt DOT	Troy	Central Square	Parallel	Concrete	Good	No	Yes	Yes	No	No	No	Yes	No	NA	Yes	8.33% to 10%	Less than or equal to 2%	Greater than 48 inches	1	46	69
1488	8/12/2015	Sandt DOT	Amherst	101A	Parallel	Concrete	Good	No	Yes	Yes	No	No	No	Yes	No	NA	Yes	8.33% to 10%	Less than or equal to 2%	Greater than 48 inches	1	46	69
1705	9/4/2015	Sandt DOT	Keene	Winchester Street	Parallel	Concrete	Good	No	Yes	Yes	No	No	No	Yes	No	NA	Yes	8.33% to 10%	Less than or equal to 2%	Greater than 48 inches	1	46	69
2714	12/9/2015	Wilkinson District 1	Carroll	Rte. 302	Parallel	Concrete	Good	No	Yes	Yes	No	No	No	Yes	No	NA	Yes	8.33% to 10%	Less than or equal to 2%	Greater than 48 inches	1	46	69
2717	12/9/2015	Wilkinson District 1	Carroll	Rte. 3	Parallel	Concrete	Fair	No	Yes	Yes	No	No	No	Yes	No	NA	Yes	Less than 8.33%	Less than or equal to 2%	Greater than 48 inches	1	46	69
1678	9/3/2015	Sandt DOT	Swanzey	Sawyer's Crossing	Perpendicular	Concrete	Good	No	Yes	Yes	No	No	No	No	Yes	NA	Yes	8.33% to 10%	Less than or equal to 2%	Greater than 48 inches	1	46	69
1679	9/3/2015	Sandt DOT	Swanzey	Sawyer's Crossing	Perpendicular	Concrete	Good	No	Yes	Yes	No	No	No	No	Yes	NA	Yes	8.33% to 10%	Less than or equal to 2%	Greater than 48 inches	1	46	69
1300	7/23/2015	Sandt DOT	Derry	E Broadway	Diagonal	Asphalt	Good	Yes	Yes	No	No	No	No	Yes	Yes	Yes	Yes	10% to 12.5%	Greater than 2%	Greater than 48 inches	1	46	69
1306	7/23/2015	Sandt DOT	Derry	E Broadway	Perpendicular	Asphalt	Good	Yes	Yes	No	No	No	No	Yes	Yes	Yes	Yes	10% to 12.5%	Greater than 2%	Greater than 48 inches	1	46	69
1307	7/23/2015	Sandt DOT	Derry	E Broadway	Perpendicular	Asphalt	Good	Yes	Yes	No	No	No	No	Yes	Yes	Yes	Yes	10% to 12.5%	Greater than 2%	Greater than 48 inches	1	46	69
1308	7/23/2015	Sandt DOT	Derry	E Broadway	Diagonal	Asphalt	Good	Yes	Yes	No	No	No	No	Yes	Yes	Yes	Yes	10% to 12.5%	Greater than 2%	Greater than 48 inches	1	46	69
1522	8/17/2015	Sandt DOT	Antrim	Main Street	Diagonal	Asphalt	Good	Yes	Yes	No	No	No	No	Yes	Yes	Yes	Yes	10% to 12.5%	Greater than 2%	Greater than 48 inches	1	46	69
1505	8/13/2015	Sandt DOT	Wilton	Main Street	Parallel	Asphalt	Good	Yes	Yes	No	No	No	No	Yes	Yes	Yes	Yes	10% to 12.5%	Greater than 2%	Greater than 48 inches	1	46	69
1321	7/23/2015	Sandt DOT	Derry	S Main St.	Parallel	Asphalt	Good	Yes	Yes	No	No	No	No	Yes	Yes	NA	Yes	10% to 12.5%	Greater than 2%	Greater than 48 inches	1	46	69
2764	12/15/2015	Wilkinson District 1	Littleton	Rte. 116	Parallel	Asphalt	Good	Yes	Yes	No	No	No	No	Yes	Yes	NA	Yes	10% to 12.5%	Greater than 2%	Greater than 48 inches	1	46	69
2662	12/7/2015	Wilkinson District 1	Jefferson	Rte. 2	Perpendicular	Concrete	Good	No	Yes	Yes	No	Yes	No	Yes	No	NA	Yes	Less than 8.33%	Greater than 2%	Greater than 48 inches	1	45	69
2040	10/6/2015	Sandt DOT	Dover	Durham Road	Perpendicular	Asphalt	Poor	Yes	No	Yes	No	No	No	Yes	Yes	NA	Yes	Less than 8.33%	Less than or equal to 2%	Greater than 48 inches	1	45	69
1583	8/20/2015	Sandt DOT	New Ipswich	Turnpike Road	Diagonal	Asphalt	Fair	Yes	Yes	Yes	No	No	No	Yes	Yes	Yes	Yes	Greater than 12.5%	Greater than 2%	36 to 48 inches	1	45	69
2775	12/16/2015	Nichols district 1	Littleton	Rte 302	Combined	Concrete	Fair	Yes	Yes	Yes	No	No	No	Yes	NA	NA	Yes	Greater than 12.5%	Greater than 2%	Greater than 48 inches	1	45	69
2788	12/16/2015	Nichols district 1	Littleton	Rte 302	Parallel	Concrete	Fair	Yes	Yes	Yes	No	No	No	Yes	NA	NA	Yes	Greater than 12.5%	Greater than 2%	Greater than 48 inches	1	45	69
2555	11/25/2015	Nichols district 1	Gorham	Rte 16	Parallel	Concrete	Fair	Yes	Yes	Yes	No	No	No	Yes	Yes	No	Yes	8.33% to 10%	Greater than 2%	Greater than 48 inches	1	45	69
3009	2/4/2016	Nichols district 1	Conway	Rte 302/16	Combined	Concrete	Good	Yes	Yes	Yes	No	No	No	Yes	No	No	Yes	Less than 8.33%	Greater than 2%	Greater than 48 inches	1	45	69
3012	2/4/2016	Nichols district 1	Conway	Rte 302/16	Combined	Concrete	Good	Yes	Yes	Yes	No	No	No	Yes	No	No	Yes	Less than 8.33%	Greater than 2%	Greater than 48 inches	1	45	69
3007	2/2/2016	Nichols district 1	Conway	Rte 302/16	Combined	Concrete	Good	Yes	Yes	Yes	No	No	No	Yes	No	No	Yes	Less than 8.33%	Greater than 2%	Greater than 48 inches	1	45	69
3008	2/2/2016	Nichols district 1	Conway	Rte 302/16	Parallel	Concrete	Good	Yes	Yes	Yes	No	No	No	Yes	No	No	Yes	Less than 8.33%	Greater than 2%	Greater than 48 inches	1	45	69
2998	2/1/2016	Nichols district 1	Conway	Rte 302/16	Combined	Concrete	Good	Yes	Yes	Yes	No	No	No	Yes	No	No	Yes	Less than 8.33%	Greater than 2%	Greater than 48 inches	1	45	69
2690	12/8/2015	Nichols district 1	Lancaster	Rte 2 and Rte 3	Parallel	Concrete	Good	Yes	Yes	Yes	No	No	No	Yes	No	No	Yes	Less than 8.33%	Greater than 2%	Greater than 48 inches	1	45	69
1293	7/23/2015	Sandt DOT	Derry	E Broadway	Perpendicular	Asphalt	Good	Yes	No	No	No	No	No	Yes	Yes	NA	Yes	Less than 8.33%	Less than or equal to 2%	Greater than 48 inches	1	45	69
1294	7/23/2015	Sandt DOT	Derry	E Broadway	Perpendicular	Asphalt	Good	Yes	No	No	No	No	No	Yes	Yes	NA	Yes	Less than 8.33%	Less than or equal to 2%	Greater than 48 inches	1	45	69
304	7/13/2015	Sandt DOT	Nashua	East Dunstable Road	Perpendicular	Asphalt	Good	Yes	No	No	No	No	No	Yes	Yes	NA	Yes	Less than 8.33%	Less than or equal to 2%	Greater than 48 inches	1	45	69
1565	8/19/2015	Sandt DOT	Peterborough	Main	Diagonal	Asphalt	Good	Yes	No	No	No	No	No	Yes	Yes	Yes	Yes	Less than 8.33%	Less than or equal to 2%	Greater than 48 inches	1	45	69
2585	11/30/2015	Sandt DOT	Concord	South Street	Diagonal	Asphalt	Good	Yes	No	No	No	No	No	Yes	Yes	Yes	Yes	Less than 8.33%	Less than or equal to 2%	Greater than 48 inches	1	45	69
2586	11/30/2015	Sandt DOT	Concord	South Street	Parallel	Asphalt	Good	Yes	No	No	No	No	No	Yes	Yes	NA	Yes	Less than 8.33%	Less than or equal to 2%	Greater than 48 inches	1	45	69
2587	11/30/2015	Sandt DOT	Concord	South Street	Diagonal	Asphalt	Good	Yes	No	No	No	No	No	Yes	Yes	Yes	Yes	Less than 8.33%	Less than or equal to 2%	Greater than 48 inches	1	45	69
2588	11/30/2015	Sandt DOT	Concord	South Street	Diagonal	Asphalt	Good	Yes	No	No	No	No	No	Yes	Yes	Yes	Yes	Less than 8.33%	Less than or equal to 2%	Greater than 48 inches	1	45	69
2609	11/30/2015	Sandt DOT	Concord	Rt 13	Parallel	Asphalt	Good	Yes	No	No	No	No	No	Yes	Yes	NA	Yes	Less than 8.33%	Less than or equal to 2%	Greater than 48 inches	1	45	69
2611	11/30/2015	Sandt DOT	Concord	South Street	Diagonal	Asphalt	Good	Yes	No	No	No	No	No	Yes	Yes	Yes	Yes	Less than 8.33%	Less than or equal to 2%	Greater than 48 inches	1	45	69
2612	11/30/2015	Sandt DOT	Concord	South Street	Diagonal	Asphalt	Good	Yes	No	No	No	No	No	Yes	Yes	Yes	Yes	Less than 8.33%	Less than or equal to 2%	Greater than 48 inches	1	45	69
34					Perpendicular	Asphalt	Good	Yes	Yes	No	No	No	No	Yes	No	Yes	Yes	Less than 8.33%	Less than or equal to 2%	Greater than 48 inches	1	45	69
2312	10/27/2015	Sandt DOT	Hampton	Ocean Blvd	Perpendicular	Asphalt	Good	Yes	Yes	No	No	No	No	Yes	No	NA	Yes	Less than 8.33%	Less than or equal to 2%	Greater than 48 inches	1	45	69
2313	10/27/2015	Sandt DOT	Hampton	Ocean Blvd	Perpendicular	Asphalt	Good	Yes	Yes	No	No	No	No	Yes	No	NA	Yes	Less than 8.33%	Less than or equal to 2%	Greater than 48 inches	1	45	69
2314	10/27/2015	Sandt DOT	Hampton	Ocean Blvd	Perpendicular	Asphalt	Good	Yes	Yes	No	No	No	No	Yes	No	NA	Yes	Less than 8.33%	Less than or equal to 2%	Greater than 48 inches	1	45	69
2319	10/27/2015	Sandt DOT	Hampton	Ocean Blvd	Perpendicular	Asphalt	Good	Yes	Yes	No	No	No	No	Yes	No	NA	Yes	Less than 8.33%	Less than or equal to 2%	Greater than 48 inches	1	45	69
2320	10/27/2015	Sandt DOT	Hampton	Ocean Blvd	Perpendicular	Asphalt	Good	Yes	Yes	No	No	No	No	Yes	No	NA	Yes	Less than 8.33%	Less than or equal to 2%	Greater than 48 inches	1	45	69
2416	10/27/2015	Sandt DOT	Hampton	Ocean Blvd	Perpendicular	Asphalt	Good	Yes	Yes	No	No	No	No	Yes	No	NA	Yes	Less than 8.33%	Less than or equal to 2%	Greater than 48 inches	1	45	69
2417	10/27/2015	Sandt DOT	Hampton	Ocean Blvd	Perpendicular	Asphalt	Good	Yes	Yes	No	No	No	No	Yes	No	NA	Yes	Less than 8.33%	Less than or equal to 2%	Greater than 48 inches	1	45	69
2422	10/27/2015	Sandt DOT	Hampton	Ocean Blvd	Perpendicular	Asphalt	Good	Yes	Yes	No	No	No	No	Yes	No	NA	Yes	Less than 8.33%	Less than or equal to 2%	Greater than 48 inches	1	45	69
2423	10/27/2015	Sandt DOT	Hampton	Ocean Blvd	Perpendicular	Asphalt	Good	Yes	Yes	No	No	No	No	Yes	No	NA	Yes	Less than 8.33%	Less than or equal to 2%	Greater than 48 inches	1	45	69
143	6/30/2015	Sandt DOT	Manchester	2nd Street	Diagonal	Asphalt	Good	Yes	Yes	No	No	No	No	Yes	Yes	Yes	Yes	8.33% to 10%	Greater than 2%	36 to 48 inches	1	45	69
31	6/12/2015	Sandt DOT	Concord	Noble Drive	Parallel	Asphalt	Good	Yes	Yes	No	No	No	No	Yes	Yes	NA	Yes	Less than 8.33%	Less than or equal to 2%	Greater than 48 inches	1	45	69
336	7/14/2015	Sandt DOT	Hudson	Derry Street	Perpendicular	Asphalt	Good	Yes	Yes	No	No	No	No	Yes	No	NA	Yes	Less than 8.33%	Less than or equal to 2%	Greater than 48 inches	1	45	69
338	7/14/2015	Sandt DOT	Hudson	Derry Road	Perpendicular	Asphalt	Good	Yes	Yes	No	No	No	No	Yes	No	NA	Yes	Less than 8.33%	Less than or equal to 2%	Greater than 48 inches	1	45	69
339	7/14/2015	Sandt DOT	Hudson	Derry Road	Perpendicular	Asphalt	Good	Yes	Yes	No	No	No	No	Yes	No	NA	Yes	Less than 8.33%	Less than or equal to 2%	Greater than 48 inches	1	45	69
388	7/17/2015	Sandt DOT	Pittsfield	Main Street	Parallel	Asphalt	Good	Yes	Yes	No	No	No	Yes	Yes	Yes	NA	Yes	Less than 8.33%	Less than or equal to 2%	Greater than 48 inches	1	45	69
2077	10/8/2015	Sandt DOT	Durham	Main Street	Perpendicular	Concrete	Good	Yes	Yes	No	No	No	No	Yes	Yes	NA	Yes	8.33% to 10%	Greater than 2%	Greater than 48 inches	1	45	69
1236	7/20/2015	Sandt DOT	Epsom	Dover Road	Parallel	Asphalt	Good	Yes	Yes	No	No	No	No	Yes	No	NA	Yes	Less than 8.33%	Less than or equal to 2%	Greater than 48 inches	1	45	69
1237	7/20/2015	Sandt DOT	Epsom	Dover Road	Parallel	Asphalt	Good	Yes	Yes	No	No	No	No	Yes	No	NA	Yes	Less than 8.33%	Less than or equal to 2%	Greater than 48 inches	1	45	69
4059	2/29/2016	Sandt DOT	Seabrook	Rt 1	Perpendicular	Asphalt	Good	Yes	Yes	No	No	No	No	Yes	No	Yes	Yes	Less than 8.33%	Less than or equal to 2%	Greater than 48 inches	1	45	69
2974	1/26/2016	Wilkinson District 1	Conway	Rte. 16 and 302	Parallel	Concrete	Good	Yes	Yes	No	No	No	No	Yes	Yes	NA	Yes	8.33% to 10%	Greater than 2%	Greater than 48 inches	1	45	69

2975	1/26/2016	Wilkinson District 1	Conway	Rte. 16 and 302	Parallel	Concrete	Good	Yes	Yes	No	No	No	No	Yes	Yes	NA	Yes	8.33% to 10%	Greater than 2%	Greater than 48 inches	1	45	69
5137	3/23/2016	Sandt DOT	Plaistow	Rt 125	Diagonal	Asphalt	Good	Yes	Yes	No	No	No	No	Yes	No	Yes	Yes	Less than 8.33%	Less than or equal to 2%	Greater than 48 inches	1	45	69
3020	2/9/2016	Wilkinson District 1	Conway	Rtes. 16 & 302	Perpendicular	Concrete	Fair	Yes	No	Yes	No	No	No	Yes	Yes	NA	Yes	8.33% to 10%	Less than or equal to 2%	Greater than 48 inches	1	44	70
4132	3/18/2016	Sandt DOT	Plaistow	Rt 125	Perpendicular	Concrete	Good	Yes	No	Yes	No	No	Yes	Yes	Yes	NA	Yes	Less than 8.33%	Less than or equal to 2%	Greater than 48 inches	1	44	70
4133	3/18/2016	Sandt DOT	Plaistow	Rt 125	Perpendicular	Concrete	Good	Yes	No	Yes	No	No	Yes	Yes	Yes	NA	Yes	Less than 8.33%	Less than or equal to 2%	Greater than 48 inches	1	44	70
2664	12/7/2015	Nichols district 1	Groveton	Rte 3	Perpendicular	Concrete	Fair	Yes	Yes	Yes	No	No	No	Yes	No	Yes	Yes	8.33% to 10%	Less than or equal to 2%	Greater than 48 inches	1	44	70
5141	3/23/2016	Sandt DOT	Plaistow	Rt 125	Perpendicular	Concrete	Good	Yes	Yes	Yes	No	No	Yes	Yes	No	NA	Yes	Less than 8.33%	Less than or equal to 2%	Greater than 48 inches	1	44	70
5142	3/23/2016	Sandt DOT	Plaistow	Rt 125	Diagonal	Concrete	Good	Yes	Yes	Yes	No	No	Yes	Yes	No	NA	Yes	Less than 8.33%	Less than or equal to 2%	Greater than 48 inches	1	44	70
1566	8/19/2015	Sandt DOT	Peterborough	Main	Parallel	Concrete	Good	Yes	Yes	No	No	No	No	Yes	Yes	NA	Yes	10% to 12.5%	Less than or equal to 2%	Greater than 48 inches	1	44	70
6	10/30/2014	Srpc Tom brown	Rochester	Community way	Other	Concrete	Good	Yes	Yes	No	No	No	No	Yes	Yes	NA	Yes	10% to 12.5%	Less than or equal to 2%	Greater than 48 inches	1	44	70
1270	7/22/2015	Sandt DOT	Derry	W Broadway	Parallel	Stamped Asphalt	Fair	Yes	Yes	No	No	No	No	Yes	Yes	NA	Yes	Less than 8.33%	Less than or equal to 2%	Greater than 48 inches	1	43	71
1781	9/21/2015	Sandt DOT	Hanover	Rt 10	Perpendicular	Stamped Asphalt	Fair	Yes	Yes	No	No	No	No	Yes	Yes	NA	Yes	Less than 8.33%	Less than or equal to 2%	Greater than 48 inches	1	43	71
2761	12/14/2015	Patch district 1	Littleton	Rte 302	Parallel	Concrete	Good	No	No	Yes	No	No	No	Yes	NA	NA	Yes	Less than 8.33%	Greater than 2%	Greater than 48 inches	1	42	71
4107	3/16/2016	Sandt DOT	Plaistow	East Road	Parallel	Concrete	Good	No	No	Yes	No	No	No	Yes	NA	NA	Yes	Less than 8.33%	Greater than 2%	Greater than 48 inches	1	42	71
2182	10/20/2015	Sandt DOT	Exeter	Portsmouth Ave	Perpendicular	Asphalt	Fair	No	Yes	Yes	No	No	No	Yes	No	NA	Yes	Less than 8.33%	Less than or equal to 2%	Greater than 48 inches	1	42	71
2183	10/20/2015	Sandt DOT	Exeter	Portsmouth Ave	Perpendicular	Asphalt	Fair	No	Yes	Yes	No	No	No	Yes	No	NA	Yes	Less than 8.33%	Less than or equal to 2%	Greater than 48 inches	1	42	71
2106	10/14/2015	Sandt DOT	Portsmouth	Ocean Road	Parallel	Concrete	Good	No	Yes	Yes	No	No	No	Yes	No	NA	Yes	Less than 8.33%	Greater than 2%	Greater than 48 inches	1	42	71
2107	10/14/2015	Sandt DOT	Portsmouth	Ocean Road	Parallel	Concrete	Good	No	Yes	Yes	No	No	No	Yes	No	NA	Yes	Less than 8.33%	Greater than 2%	Greater than 48 inches	1	42	71
2108	10/14/2015	Sandt DOT	Portsmouth	Ocean Road	Parallel	Concrete	Good	No	Yes	Yes	No	No	No	Yes	No	NA	Yes	Less than 8.33%	Greater than 2%	Greater than 48 inches	1	42	71
2893	1/5/2016	Sandt DOT	Belmont	Rt 140	Perpendicular	Concrete	Good	No	Yes	Yes	No	No	No	Yes	No	NA	Yes	Less than 8.33%	Greater than 2%	Greater than 48 inches	1	42	71
2729	12/10/2015	Sandt DOT	Laconia	Rt 3	Parallel	Concrete	Good	No	Yes	Yes	No	No	No	Yes	No	NA	Yes	Less than 8.33%	Greater than 2%	Greater than 48 inches	1	42	71
2713	12/9/2015	Wilkinson District 1	Carroll	Rte. 302	Parallel	Concrete	Good	No	Yes	Yes	No	No	No	Yes	No	NA	Yes	Less than 8.33%	Greater than 2%	Greater than 48 inches	1	42	71
345	7/15/2015	Sandt DOT	Salem	N Broadway	Diagonal	Concrete	Fair	Yes	Yes	No	No	Yes	No	Yes	Yes	NA	Yes	Less than 8.33%	Less than or equal to 2%	Greater than 48 inches	1	42	71
2986	1/27/2016	Nichols district 1	Conway	Rte 302/16	Parallel	Concrete	Good	Yes	Yes	No	No	Yes	No	Yes	Yes	NA	Yes	8.33% to 10%	Less than or equal to 2%	Greater than 48 inches	1	42	71
2178	10/20/2015	Sandt DOT	Exeter	Portsmouth Ave	Perpendicular	Asphalt	Fair	Yes	Yes	No	No	No	No	Yes	Yes	NA	Yes	Less than 8.33%	Greater than 2%	Greater than 48 inches	1	41	72
1736	9/14/2015	Sandt DOT	Charlestown		Perpendicular	Concrete	Good	No	Yes	No	No	No	No	Yes	Yes	NA	Yes	Less than 8.33%	Less than or equal to 2%	Greater than 48 inches	1	41	72
1529	8/17/2015	Sandt DOT	Antrim	Main Street	Perpendicular	Asphalt	Good	Yes	Yes	No	No	No	No	Yes	Yes	NA	Yes	8.33% to 10%	Greater than 2%	Greater than 48 inches	1	41	72
1530	8/17/2015	Sandt DOT	Antrim	Main Street	Perpendicular	Asphalt	Good	Yes	Yes	No	No	No	No	Yes	Yes	NA	Yes	8.33% to 10%	Greater than 2%	Greater than 48 inches	1	41	72
1342	7/24/2015	Sandt DOT	Londonderry	Rockingham Road	Parallel	Concrete	Good	No	Yes	No	No	No	No	Yes	Yes	NA	Yes	Less than 8.33%	Less than or equal to 2%	Greater than 48 inches	1	41	72
1343	7/24/2015	Sandt DOT	Londonderry	Rockingham Road	Parallel	Concrete	Good	No	Yes	No	No	No	No	Yes	Yes	NA	Yes	Less than 8.33%	Less than or equal to 2%	Greater than 48 inches	1	41	72
2244	10/23/2015	Sandt DOT	Newmarket	Exeter Road	Diagonal	Concrete	Good	No	Yes	No	No	No	No	Yes	Yes	NA	Yes	Less than 8.33%	Less than or equal to 2%	Greater than 48 inches	1	41	72
212	7/7/2015	Sandt DOT	Concord	Foundry Street	Perpendicular	Concrete	Good	No	Yes	No	No	No	No	Yes	Yes	NA	Yes	Less than 8.33%	Less than or equal to 2%	Greater than 48 inches	1	41	72
213	7/7/2015	Sandt DOT	Concord	Foundry Street	Perpendicular	Concrete	Good	No	Yes	No	No	No	No	Yes	Yes	NA	Yes	Less than 8.33%	Less than or equal to 2%	Greater than 48 inches	1	41	72
1528	8/17/2015	Sandt DOT	Antrim	Main Street	Perpendicular	Asphalt	Good	Yes	Yes	No	No	No	No	Yes	Yes	NA	Yes	8.33% to 10%	Greater than 2%	Greater than 48 inches	1	41	72
2941	1/11/2016	Sandt DOT	Sandt DOT	Rt 3	Parallel	Concrete	Good	No	Yes	No	No	No	No	Yes	NA	NA	Yes	Less than 8.33%	Less than or equal to 2%	Greater than 48 inches	1	41	72
2950	1/11/2016	Sandt DOT	Sandt DOT	Rt 3	Parallel	Concrete	Good	No	Yes	No	No	No	No	Yes	NA	NA	Yes	Less than 8.33%	Less than or equal to 2%	Greater than 48 inches	1	41	72
2513	11/6/2015	Sandt DOT	Seabrook	Rt 1	Parallel	Concrete	Good	No	Yes	No	No	No	No	Yes	NA	Yes	Yes	Less than 8.33%	Less than or equal to 2%	Greater than 48 inches	1	41	72
2514	11/6/2015	Sandt DOT	Seabrook	Rt 1	Parallel	Concrete	Good	No	Yes	No	No	No	No	Yes	NA	Yes	Yes	Less than 8.33%	Less than or equal to 2%	Greater than 48 inches	1	41	72
2515	11/6/2015	Sandt DOT	Seabrook	Rt 1	Parallel	Concrete	Good	No	Yes	No	No	No	No	Yes	NA	Yes	Yes	Less than 8.33%	Less than or equal to 2%	Greater than 48 inches	1	41	72
2516	11/6/2015	Sandt DOT	Seabrook	Rt 1	Parallel	Concrete	Good	No	Yes	No	No	No	No	Yes	NA	Yes	Yes	Less than 8.33%	Less than or equal to 2%	Greater than 48 inches	1	41	72
2519	11/6/2015	Sandt DOT	Seabrook	Rt 1	Parallel	Concrete	Good	No	Yes	No	No	No	No	Yes	NA	Yes	Yes	Less than 8.33%	Less than or equal to 2%	Greater than 48 inches	1	41	72
2520	11/6/2015	Sandt DOT	Seabrook	Rt 1	Parallel	Concrete	Good	No	Yes	No	No	No	No	Yes	NA	Yes	Yes	Less than 8.33%	Less than or equal to 2%	Greater than 48 inches	1	41	72
4051	11/6/2015	Sandt DOT	Seabrook	Rt 1	Parallel	Concrete	Good	No	Yes	No	No	No	No	Yes	NA	Yes	Yes	Less than 8.33%	Less than or equal to 2%	Greater than 48 inches	1	41	72
4052	11/6/2015	Sandt DOT	Seabrook	Rt 1	Parallel	Concrete	Good	No	Yes	No	No	No	No	Yes	NA	Yes	Yes	Less than 8.33%	Less than or equal to 2%	Greater than 48 inches	1	41	72
2464	11/2/2015	Sandt DOT	Hampton	Ocean Blvd	Perpendicular	Concrete	Good	No	Yes	No	No	No	No	Yes	NA	NA	Yes	Less than 8.33%	Less than or equal to 2%	Greater than 48 inches	1	41	72
2466	11/2/2015	Sandt DOT	Hampton	Ocean Blvd	Perpendicular	Concrete	Good	No	Yes	No	No	No	No	Yes	NA	NA	Yes	Less than 8.33%	Less than or equal to 2%	Greater than 48 inches	1	41	72
2467	11/2/2015	Sandt DOT	Hampton	Ocean Blvd	Perpendicular	Concrete	Good	No	Yes	No	No	No	No	Yes	NA	NA	Yes	Less than 8.33%	Less than or equal to 2%	Greater than 48 inches	1	41	72
2468	11/2/2015	Sandt DOT	Hampton	Ocean Blvd	Perpendicular	Concrete	Good	No	Yes	No	No	No	No	Yes	NA	NA	Yes	Less than 8.33%	Less than or equal to 2%	Greater than 48 inches	1	41	72
2469	11/2/2015	Sandt DOT	Hampton	Ocean Blvd	Perpendicular	Concrete	Good	No	Yes	No	No	No	No	Yes	NA	NA	Yes	Less than 8.33%	Less than or equal to 2%	Greater than 48 inches	1	41	72
2485			Hinsdale	Depot Rd	Parallel	Concrete	Good	No	Yes	No	No	No	No	Yes	Yes	NA	Yes	Less than 8.33%	Less than or equal to 2%	Greater than 48 inches	1	41	72
5146	3/30/2016	Sandt DOT	Plaistow	Kingston Road	Parallel	Concrete	Good	No	Yes	No	No	No	No	Yes	Yes	NA	Yes	Less than 8.33%	Less than or equal to 2%	Greater than 48 inches	1	41	72
2865	12/28/2015	NM SWRPC	Hinsdale	School st	Parallel	Concrete	Good	No	Yes	Yes	No	No	No	Yes	No	NA	Yes	Less than 8.33%	Less than or equal to 2%	36 to 48 inches	1	40	73
2866	12/28/2015	NM SWRPC	Hinsdale	School st	Parallel	Concrete	Good	No	Yes	Yes	No	No	No	Yes	No	NA	Yes	Less than 8.33%	Less than or equal to 2%	36 to 48 inches	1	40	73
2412	11/2/2015	Nichols district 1	Colebrook	Rte 26	Parallel	Concrete	Good	Yes	Yes	Yes	No	No	No	Yes	No	Yes	Yes	8.33% to 10%	Greater than 2%	Greater than 48 inches	1	40	73
1316	7/23/2015	Sandt DOT	Derry	S Main St.	Parallel	Asphalt	Good	Yes	Yes	No	No	No	No	Yes	Yes	NA	Yes	10% to 12.5%	Less than or equal to 2%	Greater than 48 inches	1	40	73
1297	7/23/2015	Sandt DOT	Derry	E Broadway	Perpendicular	Asphalt	Good	Yes	Yes	No	No	No	No	Yes	Yes	NA	Yes	10% to 12.5%	Less than or equal to 2%	Greater than 48 inches	1	40	73
1298	7/23/2015	Sandt DOT	Derry	E Broadway	Perpendicular	Asphalt	Good	Yes	Yes	No	No	No	No	Yes	Yes	NA	Yes	10% to 12.5%	Less than or equal to 2%	Greater than 48 inches	1	40	73
1304	7/23/2015	Sandt DOT	Derry	E Broadway	Diagonal	Asphalt	Good	Yes	Yes	No	No	No	No	Yes	Yes	Yes	Yes	10% to 12.5%	Less than or equal to 2%	Greater than 48 inches	1	40	73
312	7/13/2015	Sandt DOT	Nashua	East Dunstable Road	Perpendicular	Asphalt	Good	Yes	Yes	No	No	No	No	Yes	Yes	NA	Yes	10% to 12.5%	Less than or equal to 2%	Greater than 48 inches	1	40	73
2103	10/14/2015	Sandt DOT	Portsmouth	Rt 1	Perpendicular	Asphalt	Good	Yes	Yes	No	No	No	No	Yes	Yes	NA	Yes	10% to 12.5%	Less than or equal to 2%	Greater than 48 inches	1	40	73
1908	10/1/2015	Sandt DOT	Northwood	US 4	Diagonal	Asphalt	Good	Yes	Yes	No	No	No	No	Yes	Yes	Yes	Yes	10% to 12.5%	Less than or equal to 2%	Greater than 48 inches	1	40	73
1909	10/1/2015	Sandt DOT	Northwood	US 4	Diagonal	Asphalt	Good	Yes	Yes	No	No	No	No	Yes	Yes	Yes	Yes	10% to 12.5%	Less than or equal to 2%	Greater than 48 inches	1	40	73
5148	3/30/2016	Sandt DOT	Plaistow	Main	Perpendicular	Asphalt	Good	Yes	Yes	No	No	No	No	Yes	Yes	NA	Yes	10% to 12.5%	Less than or equal to 2%	Greater than 48 inches	1	40	73
2661	12/7/2015	Wilkinson District 1	Jefferson	Rte. 2	Perpendicular	Concrete	Good	No	Yes	Yes	No	Yes	No	Yes	No	NA	Yes	Less than 8.33%	Less than or equal to 2%	Greater than 48 inches	1	39	73
2590	11/30/2015	Sandt DOT	Concord	Rt 13	Parallel	Concrete	Good	Yes	No	Yes	No	No	No	Yes	Yes	NA	Yes	10% to 12.5%	Less than or equal to 2%	Greater than 48 inches	1	39	73
2553	11/25/2015	Nichols district 1	Gorham	Rte 16	Parallel	Concrete	Good	Yes	No	Yes	No	No	No	Yes	Yes	No	Yes	Less than 8.33%	Less than or equal to 2%	Greater than 48 inches	1	39	73
2554	11/25/2015	Nichols district 1	Gorham	Rte 16	Parallel	Concrete	Good	Yes	No	Yes	No	No	No	Yes	Yes	No	Yes	Less than 8.33%	Less than or equal to 2%	Greater than 48 inches	1	39	73
3011	2/4/2016	Nichols district 1	Conway	Rte 302/16	Combined	Concrete	Good	Yes	Yes	Yes	No	No	No	Yes	No	No	Yes	Less than 8.33%	Less than or equal to 2%	Greater than 48 inches	1	39	73
2688	12/8/2015	Nichols district 1	Lancaster	Rte 2	Combined	Concrete	Good	Yes	Yes	Yes	No	No	No	Yes	No	No	Yes	Less than 8.33%	Less than or equal to 2%	Greater than 48 inches	1	39	73
1636	8/31/2015	Sandt DOT	Hinsdale	Brattleboro Road	Perpendicular	Concrete	Good	Yes	Yes	No	No	No	No	Yes	Yes	NA	Yes	Less than 8.33%	Greater than 2%	36 to 48 inches	1	39	73
1637	8/31/2015	Sandt DOT	Hinsdale	Brattleboro Road	Perpendicular	Concrete	Good	Yes	Yes	Yes	No	No	No	Yes	Yes	NA	Yes	Less than 8.33%	Greater than 2%	36 to 48 inches	1	39	73
175	7/2/2015	Sandt DOT	Manchester	Londonderry Tpke	Parallel	Concrete	Fair	Yes	Yes	Yes	No	No	No	Yes	Yes	NA	Yes	Less than 8.33%	Less than or equal to 2%	Greater than 48 inches	1	39	73
1834	9/24/2015	Sandt DOT	Enfield	Main	Diagonal	Stamped Asphalt	Good	Yes	Yes	No	No	No	No	Yes	Yes	Yes	Yes	Less than 8.33%	Greater than 2%	Greater than 48 inches	1	39	73
1844	9/25/2015	Sandt DOT	Brentwood	North Road	Combined	Concrete	Good	Yes	Yes	No	No	No	No	Yes	Yes	NA	Yes	8.33% to 10%	Less than or equal to 2%	Greater than 48 inches	1	39	73
1849	9/25/2015	Sandt DOT	Brentwood	North Road	Combined	Concrete	Good	Yes	Yes	No	No	No	No	Yes	Yes	NA	Yes	8.33% to 10%	Less than or equal to 2%	Greater than 48 inches	1	39	73
21	6/12/2015	Sandt DOT	Concord	Noble Drive	Parallel	Concrete	Fair	Yes	Yes	No	No	No	No	Yes	Yes	NA	Yes	Less than 8.33%	Less than or equal to 2%	Greater than 48 inches	1	39	73
1833	9/24/2015	Sandt DOT	Enfield	Main	Diagonal	Stamped Asphalt	Good	Yes	Yes	No	No	No	No	Yes	Yes	Yes	Yes	Less than 8.33%	Greater than 2%	Greater than 48 inches	1	39	73
1967	10/2/2015	Sandt DOT	Rochester	N Main St	Diagonal	Concrete	Good	Yes	Yes	No	No	No	No	Yes	Yes	Yes	Yes	8.33% to 10%	Less than or equal to 2%	Greater than 48 inches	1	39	73
1968	10/2/2015	Sandt DOT	Rochester	N Main St	Diagonal	Concrete	Good	Yes	Yes	No	No	No	No	Yes	Yes	Yes	Yes	8.33% to 10%	Less than or equal to 2%	Greater than 48 inches	1	39	73
2473	11/2/2015	Sandt DOT	Seabrook	Ocean Blvd	Perpendicular	Concrete	Good	Yes	Yes	No	No	No	No	Yes	NA	Yes	Yes	8.33% to 10%	Less than or equal to 2%	Greater than 48 inches	1	39	73
2985	1/27/2016	Nichols district 1	Conway	Rte 302/16	Combined	Concrete	Good	Yes	Yes	No	No	Yes	No	Yes	NA	NA	Yes	Less than 8.33%	Greater than 2%	Greater than 48 inches	1	38	74
2987	1/27/2016	Nichols district 1	Conway	Rte 302/16	Combined	Concrete	Good	Yes	Yes	No	No	Yes	No	Yes	NA	NA	Yes	Less than 8.33%	Greater than 2%	Greater than 48 inches	1	38	74
1661	9/2/2015	Sandt DOT	Winchester	Elm St	Perpendicular	Concrete	Good	Yes	Yes	No	No	Yes	No	Yes	Yes	NA	Yes	Less than 8.33%	Greater than 2%	Greater than 48 inches	1	38	74
4138	3/18/2016	Sandt DOT	Plaistow	Rt 125	Perpendicular	Concrete	Good	Yes	Yes	No	No	Yes	No	Yes	Yes	NA	Yes	Less than 8.33%	Greater than 2%	Greater than 48 inches	1	38	74
1762	9/17/2015	Sandt DOT	Newport	Rt 10	Parallel	Brick	Good	Yes	Yes	No	No	No	No	Yes	Yes	NA	Yes	Less than 8.33%	Less than or equal to 2%	Greater than 48 inches	1	37	75
1751	9/16/2015	Sandt DOT	Newport	Rt 10	Perpendicular	Brick	Good	Yes	Yes	No	No	No	No	Yes	Yes	NA	Yes	Less than 8.33%	Less than or equal to 2%	Greater than 48 inches	1	37	75
1752	9/16/2015	Sandt DOT	Newport	Rt 10	Perpendicular	Brick	Good	Yes	Yes	No	No	No	No	Yes	Yes	NA	Yes	Less than 8.33%	Less than or equal to 2%	Greater than 48 inches	1	37	75
1753	9/16/2015	Sandt DOT	Newport	Rt 10	Parallel	Brick	Good	Yes	Yes	No	No	No	No	Yes	Yes	NA	Yes	Less than 8.33%	Less than or equal to 2%	Greater than 48 inches	1	37	75
1760	9/16/2015	Sandt DOT	Newport	Rt 10	Perpendicular	Brick	Good	Yes	Yes	No	No	No	No	Yes	Yes	NA	Yes	Less than 8.33%	Less than or equal to 2%	Greater than 48 inches	1	37	75
1761	9/16/2015	Sandt DOT	Newport	Rt 10	Diagonal	Brick	Good	Yes	Yes	No	No	No	No	Yes	Yes	Yes	Yes	Less than 8.33%	Less than or equal to 2%	Greater than 48 inches	1	37	75
1249	7/22/2015	Sandt DOT	Londonderry	Nashua Road	Parallel	Asphalt	Good	No	Yes	No	No	No	No	Yes	Yes	NA	Yes	Less than 8.33%	Less than or equal to 2%	Greater than 48 inches	1	37	75
1250	7/22/2015	Sandt DOT	Londonderry	Nashua Road	Parallel	Asphalt	Good	No	Yes	No	No	No	No	Yes	Yes	NA	Yes	Less than 8.33%	Less than or equal to 2%	Greater than 48 inches	1	37	75
306	7/13/2015	Sandt DOT	Nashua	East Dunstable Road	Perpendicular	Asphalt	Good	No	Yes	No	No	No	No	Yes	Yes	NA	Yes	Less than 8.33%	Less than or equal to 2%	Greater than 48 inches	1	37	75
1831	9/24/2015	Sandt DOT	Enfield	U.S. 4	Perpendicular	Brick	Good	Yes	Yes	No	No	No	No	Yes	Yes	NA	Yes	Less than 8.33%	Less than or equal to 2%	Greater than 48 inches	1	37	75
1398	7/31/2015	Sandt DOT	Warner	W Main Street	Perpendicular	Brick	Good	Yes	Yes	No	No	No	No	Yes	Yes	NA	Yes	Less than 8.33%	Less than or equal to 2%	Greater than 48 inches	1	37	75
1399	7/31/2015	Sandt DOT	Warner	W Main Street	Perpendicular	Brick	Good	Yes	Yes	No	No	No	No	Yes	Yes	NA	Yes	Less than 8.33%	Less than or equal to 2%	Greater than 48 inches	1	37	75
1757	9/16/2015	Sandt DOT	Newport	Rt 10	Perpendicular	Brick	Good	Yes	Yes	No	No	No	No	Yes	Yes	NA	Yes	Less than 8.33%	Less than or equal to 2%	Greater than 48 inches	1	37	75
1758	9/16/2015	Sandt DOT	Newport	Rt 10	Perpendicular	Brick	Good	Yes	Yes	No	No	No	No	Yes	Yes	NA	Yes	Less than 8.33%	Less than or equal to 2%	Greater than 48 inches	1	37	75
2904	1/7/2016	Sandt DOT	Tilton	Rt 140	Diagonal	Asphalt	Good	No	Yes	No	No	No	No	Yes	NA	NA	Yes	Less than 8.33%	Less than or equal to 2%	Greater than 48 inches	1	37	75
2768	12/15/2015	Sandt DOT	Tilton	Rt 3	Diagonal	Asphalt	Good	No	Yes	No	No	No	No	Yes	NA	NA	Yes	Less than 8.33%	Less than or equal to 2%	Greater than 48 inches	1	37	75
2769	12/15/2015	Sandt DOT	Tilton	Rt 3	Diagonal	Asphalt	Good	No	Yes	No	No	No	No	Yes	NA	NA	Yes	Less than 8.33%	Less than or equal to 2%	Greater than 48 inches	1	37	75
2770	12/15/2015	Sandt DOT	Tilton	Rt 3	Diagonal	Asphalt	Good	No	Yes	No	No	No	No	Yes	NA	NA	Yes	Less than 8.33%	Less than or equal to 2%	Greater than 48 inches	1	37	75
2479	11/13/2015	Sandt DOT	Canterbury	Canterbury Rest Area	Combined	Asphalt	Good	No	Yes	No	No	No	No	Yes	NA	NA	Yes	Less than 8.33%	Less than or equal to 2%	Greater than 48 inches	1	37	75
2512	11/6/2015	Sandt DOT	Seabrook	Rt 1	Parallel	Asphalt	Good	No	Yes	No	No	No	No	Yes	NA	Yes	Yes	Less than 8.33%	Less than or equal to 2%	Greater than 48 inches	1	37	75
116	6/26/2015	MC SWRPC	North Walpole	Church Street	Parallel	Concrete	Good	No	No	Yes	No	No	No	Yes	Yes	NA	Yes	Less than 8.33%	Less than or equal to 2%	Greater than 48 inches	1	36	76
217	7/7/2015	Sandt DOT	Concord	Foundry Street	Perpendicular	Concrete	Good	No	No	Yes	No	No	No	Yes	Yes	NA	Yes	Less than 8.33%	Less than or equal to 2%	Greater than 48 inches	1	36	76
218	7/7/2015	Sandt DOT	Concord	Foundry Street	Perpendicular	Concrete	Good	No	No	Yes	No	No	No	Yes	Yes	NA	Yes	Less than 8.33%	Less than or equal to 2%	Greater than 48 inches	1	36	76
220	7/7/2015	Sandt DOT	Concord	Foundry Street	Perpendicular	Concrete	Good	No	No	Yes	No	No	No	Yes	Yes	NA	Yes	Less than 8.33%	Less than or equal to 2%	Greater than 48 inches	1	36	76
221	7/7/2015	Sandt DOT	Concord	Foundry Street	Perpendicular	Concrete	Good	No	No	Yes	No	No	No	Yes	Yes	NA	Yes	Less than 8.33%	Less than or equal to 2%	Greater than 48 inches	1	36	76
222	7/7/2015	Sandt DOT	Concord	Foundry Street	Perpendicular	Concrete	Good	No	No	Yes	No	No	No	Yes	Yes	NA	Yes	Less than 8.33%	Less than or equal to 2%	Greater than 48 inches	1	36	76
223	7/7/2015	Sandt DOT	Concord	Foundry Street	Perpendicular	Concrete	Good	No	No	Yes	No	No	No	Yes	Yes	NA	Yes	Less than 8.33%	Less than or equal to 2%	Greater than 48 inches	1	36	76
224	7/7/2015	Sandt DOT	Concord	Foundry Street	Perpendicular	Concrete	Good	No	No	Yes	No	No	No	Yes	Yes	NA	Yes	Less than 8.33%	Less than or equal to 2%	Greater than 48 inches	1	36	76
2592	11/30/2015	Sandt DOT	Concord	Rt 13	Parallel	Concrete	Good	No	No	Yes	No	No	No	Yes	NA	NA	Yes	Less than 8.33%	Less than or equal to 2%	Greater than 48 inches	1	36	76

2594	11/30/2015	Sandt DOT	Concord	Rt 13	Parallel	Concrete	Good	No	No	Yes	No	No	No	Yes	NA	NA	Yes	Less than 8.33%	Less than or equal to 2%	Greater than 48 inches	1	36	76
2595	11/30/2015	Sandt DOT	Concord	Rt 13	Parallel	Concrete	Good	No	No	Yes	No	No	No	Yes	NA	NA	Yes	Less than 8.33%	Less than or equal to 2%	Greater than 48 inches	1	36	76
2597	11/30/2015	Sandt DOT	Concord	Rt 13	Parallel	Concrete	Good	No	No	Yes	No	No	No	Yes	NA	NA	Yes	Less than 8.33%	Less than or equal to 2%	Greater than 48 inches	1	36	76
2598	11/30/2015	Sandt DOT	Concord	Rt 13	Parallel	Concrete	Good	No	No	Yes	No	No	No	Yes	NA	NA	Yes	Less than 8.33%	Less than or equal to 2%	Greater than 48 inches	1	36	76
2601	11/30/2015	Sandt DOT	Concord	Rt 13	Parallel	Concrete	Good	No	No	Yes	No	No	No	Yes	NA	NA	Yes	Less than 8.33%	Less than or equal to 2%	Greater than 48 inches	1	36	76
2602	11/30/2015	Sandt DOT	Concord	Rt 13	Parallel	Concrete	Good	No	No	Yes	No	No	No	Yes	NA	NA	Yes	Less than 8.33%	Less than or equal to 2%	Greater than 48 inches	1	36	76
2603	11/30/2015	Sandt DOT	Concord	Rt 13	Parallel	Concrete	Good	No	No	Yes	No	No	No	Yes	NA	NA	Yes	Less than 8.33%	Less than or equal to 2%	Greater than 48 inches	1	36	76
2604	11/30/2015	Sandt DOT	Concord	Rt 13	Parallel	Concrete	Good	No	No	Yes	No	No	No	Yes	NA	NA	Yes	Less than 8.33%	Less than or equal to 2%	Greater than 48 inches	1	36	76
2607	11/30/2015	Sandt DOT	Concord	Rt 13	Parallel	Concrete	Good	No	No	Yes	No	No	No	Yes	NA	NA	Yes	Less than 8.33%	Less than or equal to 2%	Greater than 48 inches	1	36	76
2608	11/30/2015	Sandt DOT	Concord	Rt 13	Parallel	Concrete	Good	No	No	Yes	No	No	No	Yes	NA	NA	Yes	Less than 8.33%	Less than or equal to 2%	Greater than 48 inches	1	36	76
1239	7/21/2015	Sandt DOT	Londonderry	Mammoth Road	Parallel	Concrete	Good	No	Yes	Yes	No	No	No	Yes	No	NA	Yes	Less than 8.33%	Less than or equal to 2%	Greater than 48 inches	1	36	76
1240	7/21/2015	Sandt DOT	Londonderry	Mammoth Road	Diagonal	Concrete	Good	No	Yes	Yes	No	No	No	Yes	No	NA	Yes	Less than 8.33%	Less than or equal to 2%	Greater than 48 inches	1	36	76
1501	8/13/2015	Sandt DOT	Wilton	Main Street	Perpendicular	Concrete	Good	No	Yes	Yes	No	No	No	Yes	No	NA	Yes	Less than 8.33%	Less than or equal to 2%	Greater than 48 inches	1	36	76
1696	9/4/2015	Sandt DOT	Keene	Winchester Street	Parallel	Concrete	Good	No	Yes	Yes	No	No	No	Yes	No	NA	Yes	Less than 8.33%	Less than or equal to 2%	Greater than 48 inches	1	36	76
2458	11/2/2015	Sandt DOT	Hampton	Ocean Blvd	Perpendicular	Concrete	Good	No	Yes	Yes	No	No	No	Yes	No	NA	Yes	Less than 8.33%	Less than or equal to 2%	Greater than 48 inches	1	36	76
2459	11/2/2015	Sandt DOT	Hampton	Ocean Blvd	Perpendicular	Concrete	Good	No	Yes	Yes	No	No	No	Yes	No	NA	Yes	Less than 8.33%	Less than or equal to 2%	Greater than 48 inches	1	36	76
2204	10/21/2015	Wilkinson dist1	Clarksville	Rte 145	Parallel	Concrete	Good	No	Yes	Yes	No	No	No	Yes	No	NA	Yes	Less than 8.33%	Less than or equal to 2%	Greater than 48 inches	1	36	76
2000	10/5/2015	Sandt DOT	Rochester	Washington Street	Parallel	Concrete	Good	No	Yes	Yes	No	No	No	Yes	No	NA	Yes	Less than 8.33%	Less than or equal to 2%	Greater than 48 inches	1	36	76
1916	10/1/2015	Sandt DOT	Rochester	N Main	Parallel	Concrete	Good	No	Yes	Yes	No	No	No	Yes	No	NA	Yes	Less than 8.33%	Less than or equal to 2%	Greater than 48 inches	1	36	76
1917	10/1/2015	Sandt DOT	Rochester	N Main	Parallel	Concrete	Good	No	Yes	Yes	No	No	No	Yes	No	NA	Yes	Less than 8.33%	Less than or equal to 2%	Greater than 48 inches	1	36	76
1918	10/1/2015	Sandt DOT	Rochester	N Main	Parallel	Concrete	Good	No	Yes	Yes	No	No	No	Yes	No	NA	Yes	Less than 8.33%	Less than or equal to 2%	Greater than 48 inches	1	36	76
1717	9/4/2015	Sandt DOT	Marlborough.	Main St 101	Parallel	Concrete	Good	No	Yes	Yes	No	No	No	Yes	No	NA	Yes	Less than 8.33%	Less than or equal to 2%	Greater than 48 inches	1	36	76
1718	9/4/2015	Sandt DOT	Marlborough.	Main St 101	Parallel	Concrete	Good	No	Yes	Yes	No	No	No	Yes	No	NA	Yes	Less than 8.33%	Less than or equal to 2%	Greater than 48 inches	1	36	76
1719	9/4/2015	Sandt DOT	Marlborough.	Main St 101	Parallel	Concrete	Good	No	Yes	Yes	No	No	No	Yes	No	NA	Yes	Less than 8.33%	Less than or equal to 2%	Greater than 48 inches	1	36	76
1720	9/4/2015	Sandt DOT	Marlborough.	Main St 101	Parallel	Concrete	Good	No	Yes	Yes	No	No	No	Yes	No	NA	Yes	Less than 8.33%	Less than or equal to 2%	Greater than 48 inches	1	36	76
1638	9/1/2015	Sandt DOT	Boscawen	Harris Hill Road	Parallel	Concrete	Good	No	Yes	Yes	No	No	No	Yes	No	NA	Yes	Less than 8.33%	Less than or equal to 2%	Greater than 48 inches	1	36	76
1639	9/1/2015	Sandt DOT	Boscawen	Harris Hill Road	Parallel	Concrete	Good	No	Yes	Yes	No	No	No	Yes	No	NA	Yes	Less than 8.33%	Less than or equal to 2%	Greater than 48 inches	1	36	76
1641	9/1/2015	Sandt DOT	Boscawen	Harris Hill Road	Parallel	Concrete	Good	No	Yes	Yes	No	No	No	Yes	No	NA	Yes	Less than 8.33%	Less than or equal to 2%	Greater than 48 inches	1	36	76
1642	9/1/2015	Sandt DOT	Boscawen	Harris Hill Road	Combined	Concrete	Good	No	Yes	Yes	No	No	No	Yes	No	NA	Yes	Less than 8.33%	Less than or equal to 2%	Greater than 48 inches	1	36	76
1643	9/1/2015	Sandt DOT	Boscawen	N Main	Parallel	Concrete	Good	No	Yes	Yes	No	No	No	Yes	No	NA	Yes	Less than 8.33%	Less than or equal to 2%	Greater than 48 inches	1	36	76
1644	9/1/2015	Sandt DOT	Boscawen	N Main	Parallel	Concrete	Good	No	Yes	Yes	No	No	No	Yes	No	NA	Yes	Less than 8.33%	Less than or equal to 2%	Greater than 48 inches	1	36	76
1645	9/1/2015	Sandt DOT	Boscawen	N Main	Parallel	Concrete	Good	No	Yes	Yes	No	No	No	Yes	No	NA	Yes	Less than 8.33%	Less than or equal to 2%	Greater than 48 inches	1	36	76
1646	9/1/2015	Sandt DOT	Boscawen	N Main	Parallel	Concrete	Good	No	Yes	Yes	No	No	No	Yes	No	NA	Yes	Less than 8.33%	Less than or equal to 2%	Greater than 48 inches	1	36	76
1647	9/1/2015	Sandt DOT	Boscawen	N Main	Parallel	Concrete	Good	No	Yes	Yes	No	No	No	Yes	No	NA	Yes	Less than 8.33%	Less than or equal to 2%	Greater than 48 inches	1	36	76
1648	9/1/2015	Sandt DOT	Boscawen	N Main	Parallel	Concrete	Good	No	Yes	Yes	No	No	No	Yes	No	NA	Yes	Less than 8.33%	Less than or equal to 2%	Greater than 48 inches	1	36	76
1649	9/1/2015	Sandt DOT	Boscawen	N Main	Parallel	Concrete	Good	No	Yes	Yes	No	No	No	Yes	No	NA	Yes	Less than 8.33%	Less than or equal to 2%	Greater than 48 inches	1	36	76
1650	9/1/2015	Sandt DOT	Boscawen	N Main	Parallel	Concrete	Good	No	Yes	Yes	No	No	No	Yes	No	NA	Yes	Less than 8.33%	Less than or equal to 2%	Greater than 48 inches	1	36	76
1651	9/1/2015	Sandt DOT	Boscawen	N Main	Parallel	Concrete	Good	No	Yes	Yes	No	No	No	Yes	No	NA	Yes	Less than 8.33%	Less than or equal to 2%	Greater than 48 inches	1	36	76
1652	9/1/2015	Sandt DOT	Boscawen	N Main	Parallel	Concrete	Good	No	Yes	Yes	No	No	No	Yes	No	NA	Yes	Less than 8.33%	Less than or equal to 2%	Greater than 48 inches	1	36	76
1653	9/1/2015	Sandt DOT	Boscawen	N Main	Parallel	Concrete	Good	No	Yes	Yes	No	No	No	Yes	No	NA	Yes	Less than 8.33%	Less than or equal to 2%	Greater than 48 inches	1	36	76
1654	9/1/2015	Sandt DOT	Boscawen	N Main	Parallel	Concrete	Good	No	Yes	Yes	No	No	No	Yes	No	NA	Yes	Less than 8.33%	Less than or equal to 2%	Greater than 48 inches	1	36	76
1655	9/1/2015	Sandt DOT	Boscawen	N Main	Parallel	Concrete	Good	No	Yes	Yes	No	No	No	Yes	No	NA	Yes	Less than 8.33%	Less than or equal to 2%	Greater than 48 inches	1	36	76
1656	9/1/2015	Sandt DOT	Boscawen	N Main	Parallel	Concrete	Good	No	Yes	Yes	No	No	No	Yes	No	NA	Yes	Less than 8.33%	Less than or equal to 2%	Greater than 48 inches	1	36	76
1657	9/1/2015	Sandt DOT	Boscawen	N Main	Parallel	Concrete	Good	No	Yes	Yes	No	No	No	Yes	No	NA	Yes	Less than 8.33%	Less than or equal to 2%	Greater than 48 inches	1	36	76
1658	9/1/2015	Sandt DOT	Boscawen	N Main	Parallel	Concrete	Good	No	Yes	Yes	No	No	No	Yes	No	NA	Yes	Less than 8.33%	Less than or equal to 2%	Greater than 48 inches	1	36	76
1659	9/1/2015	Sandt DOT	Boscawen	N Main	Parallel	Concrete	Good	No	Yes	Yes	No	No	No	Yes	No	NA	Yes	Less than 8.33%	Less than or equal to 2%	Greater than 48 inches	1	36	76
1660	9/1/2015	Sandt DOT	Boscawen	N Main	Parallel	Concrete	Good	No	Yes	Yes	No	No	No	Yes	No	NA	Yes	Less than 8.33%	Less than or equal to 2%	Greater than 48 inches	1	36	76
1376	7/30/2015	Sandt DOT	Milford	Nashua Street	Parallel	Concrete	Good	No	Yes	Yes	No	No	No	Yes	No	NA	Yes	Less than 8.33%	Less than or equal to 2%	Greater than 48 inches	1	36	76
1377	7/30/2015	Sandt DOT	Milford	Nashua Street	Parallel	Concrete	Good	No	Yes	Yes	No	No	No	Yes	No	NA	Yes	Less than 8.33%	Less than or equal to 2%	Greater than 48 inches	1	36	76
1380	7/30/2015	Sandt DOT	Milford	Nashua Street	Parallel	Concrete	Good	No	Yes	Yes	No	No	No	Yes	No	NA	Yes	Less than 8.33%	Less than or equal to 2%	Greater than 48 inches	1	36	76
1381	7/30/2015	Sandt DOT	Milford	Nashua Street	Parallel	Concrete	Good	No	Yes	Yes	No	No	No	Yes	No	NA	Yes	Less than 8.33%	Less than or equal to 2%	Greater than 48 inches	1	36	76
1386	7/30/2015	Sandt DOT	Milford	Nashua Street	Parallel	Concrete	Good	No	Yes	Yes	No	No	No	Yes	No	NA	Yes	Less than 8.33%	Less than or equal to 2%	Greater than 48 inches	1	36	76
1387	7/30/2015	Sandt DOT	Milford	Nashua Street	Parallel	Concrete	Good	No	Yes	Yes	No	No	No	Yes	No	NA	Yes	Less than 8.33%	Less than or equal to 2%	Greater than 48 inches	1	36	76
1349	7/24/2015	Sandt DOT	Londonderry	Rockingham Road	Parallel	Concrete	Good	No	Yes	Yes	No	No	No	Yes	No	NA	Yes	Less than 8.33%	Less than or equal to 2%	Greater than 48 inches	1	36	76
1350	7/24/2015	Sandt DOT	Londonderry	Rockingham Road	Parallel	Concrete	Good	No	Yes	Yes	No	No	No	Yes	No	NA	Yes	Less than 8.33%	Less than or equal to 2%	Greater than 48 inches	1	36	76
1354	7/24/2015	Sandt DOT	Londonderry	Rockingham Road	Diagonal	Concrete	Good	No	Yes	Yes	No	No	No	Yes	No	NA	Yes	Less than 8.33%	Less than or equal to 2%	Greater than 48 inches	1	36	76
1355	7/24/2015	Sandt DOT	Londonderry	Rockingham Road	Parallel	Concrete	Good	No	Yes	Yes	No	No	No	Yes	No	NA	Yes	Less than 8.33%	Less than or equal to 2%	Greater than 48 inches	1	36	76
1356	7/24/2015	Sandt DOT	Londonderry	Rockingham Road	Parallel	Concrete	Good	No	Yes	Yes	No	No	No	Yes	No	NA	Yes	Less than 8.33%	Less than or equal to 2%	Greater than 48 inches	1	36	76
1357	7/24/2015	Sandt DOT	Londonderry	Rockingham Road	Parallel	Concrete	Good	No	Yes	Yes	No	No	No	Yes	No	NA	Yes	Less than 8.33%	Less than or equal to 2%	Greater than 48 inches	1	36	76
1358	7/24/2015	Sandt DOT	Londonderry	Rockingham Road	Parallel	Concrete	Good	No	Yes	Yes	No	No	No	Yes	No	NA	Yes	Less than 8.33%	Less than or equal to 2%	Greater than 48 inches	1	36	76
1359	7/24/2015	Sandt DOT	Londonderry	Rockingham Road	Parallel	Concrete	Good	No	Yes	Yes	No	No	No	Yes	No	NA	Yes	Less than 8.33%	Less than or equal to 2%	Greater than 48 inches	1	36	76
1360	7/24/2015	Sandt DOT	Londonderry	Rockingham Road	Perpendicular	Concrete	Good	No	Yes	Yes	No	No	No	Yes	No	NA	Yes	Less than 8.33%	Less than or equal to 2%	Greater than 48 inches	1	36	76
1361	7/24/2015	Sandt DOT	Londonderry	Rockingham Road	Perpendicular	Concrete	Good	No	Yes	Yes	No	No	No	Yes	No	NA	Yes	Less than 8.33%	Less than or equal to 2%	Greater than 48 inches	1	36	76
1362	7/24/2015	Sandt DOT	Londonderry	Rockingham Road	Parallel	Concrete	Good	No	Yes	Yes	No	No	No	Yes	No	NA	Yes	Less than 8.33%	Less than or equal to 2%	Greater than 48 inches	1	36	76
1363	7/24/2015	Sandt DOT	Londonderry	Rockingham Road	Parallel	Concrete	Good	No	Yes	Yes	No	No	No	Yes	No	NA	Yes	Less than 8.33%	Less than or equal to 2%	Greater than 48 inches	1	36	76
1364	7/24/2015	Sandt DOT	Auburn	Manchester Road	Diagonal	Concrete	Good	No	Yes	Yes	No	No	No	Yes	No	NA	Yes	Less than 8.33%	Less than or equal to 2%	Greater than 48 inches	1	36	76
1365	7/24/2015	Sandt DOT	Auburn	Manchester Road	Diagonal	Concrete	Good	No	Yes	Yes	No	No	No	Yes	No	NA	Yes	Less than 8.33%	Less than or equal to 2%	Greater than 48 inches	1	36	76
1367	7/24/2015	Sandt DOT	Auburn	Manchester Road	Parallel	Concrete	Good	No	Yes	Yes	No	No	No	Yes	No	NA	Yes	Less than 8.33%	Less than or equal to 2%	Greater than 48 inches	1	36	76
1368	7/24/2015	Sandt DOT	Auburn	Manchester Road	Parallel	Concrete	Good	No	Yes	Yes	No	No	No	Yes	No	NA	Yes	Less than 8.33%	Less than or equal to 2%	Greater than 48 inches	1	36	76
1369	7/24/2015	Sandt DOT	Auburn	Manchester Road	Parallel	Concrete	Good	No	Yes	Yes	No	No	No	Yes	No	NA	Yes	Less than 8.33%	Less than or equal to 2%	Greater than 48 inches	1	36	76
340	7/15/2015	Sandt DOT	Atkinson	Atkinson Depot Road	Parallel	Concrete	Good	No	Yes	Yes	No	No	No	Yes	No	NA	Yes	Less than 8.33%	Less than or equal to 2%	Greater than 48 inches	1	36	76
153	6/30/2015	NM SWRPC	North Walpole	Church st	Diagonal	Concrete	Good	No	Yes	Yes	No	No	No	Yes	No	NA	Yes	Less than 8.33%	Less than or equal to 2%	Greater than 48 inches	1	36	76
107	6/26/2015	Sandt DOT	Manchester	Daniel Webster Hwy	Parallel	Concrete	Good	No	Yes	Yes	No	No	No	Yes	No	NA	Yes	Less than 8.33%	Less than or equal to 2%	Greater than 48 inches	1	36	76
108	6/26/2015	Sandt DOT	Manchester	Daniel Webster Hwy	Parallel	Concrete	Good	No	Yes	Yes	No	No	No	Yes	No	NA	Yes	Less than 8.33%	Less than or equal to 2%	Greater than 48 inches	1	36	76
109	6/26/2015	Sandt DOT	Manchester	Daniel Webster Hwy	Parallel	Concrete	Good	No	Yes	Yes	No	No	No	Yes	No	NA	Yes	Less than 8.33%	Less than or equal to 2%	Greater than 48 inches	1	36	76
2114	10/14/2015	Sandt DOT	Portsmouth	Rt 1	Parallel	Concrete	Good	No	Yes	Yes	No	No	No	Yes	No	NA	Yes	Less than 8.33%	Less than or equal to 2%	Greater than 48 inches	1	36	76
2115	10/14/2015	Sandt DOT	Portsmouth	Rt 1	Parallel	Concrete	Good	No	Yes	Yes	No	No	No	Yes	No	NA	Yes	Less than 8.33%	Less than or equal to 2%	Greater than 48 inches	1	36	76
2116	10/14/2015	Sandt DOT	Portsmouth	Rt 1	Parallel	Concrete	Good	No	Yes	Yes	No	No	No	Yes	No	NA	Yes	Less than 8.33%	Less than or equal to 2%	Greater than 48 inches	1	36	76
2123	10/14/2015	Sandt DOT	Portsmouth	Rt 1	Parallel	Concrete	Good	No	Yes	Yes	No	No	No	Yes	No	NA	Yes	Less than 8.33%	Less than or equal to 2%	Greater than 48 inches	1	36	76
2015	10/6/2015	Sandt DOT	Dover	Littleworth Road	Parallel	Concrete	Good	No	Yes	Yes	No	No	No	Yes	No	NA	Yes	Less than 8.33%	Less than or equal to 2%	Greater than 48 inches	1	36	76
2016	10/6/2015	Sandt DOT	Dover	Littleworth Road	Parallel	Concrete	Good	No	Yes	Yes	No	No	No	Yes	No	NA	Yes	Less than 8.33%	Less than or equal to 2%	Greater than 48 inches	1	36	76
2017	10/6/2015	Sandt DOT	Dover	Littleworth Road	Parallel	Concrete	Good	No	Yes	Yes	No	No	No	Yes	No	NA	Yes	Less than 8.33%	Less than or equal to 2%	Greater than 48 inches	1	36	76
2018	10/6/2015	Sandt DOT	Dover	Littleworth Road	Parallel	Concrete	Good	No	Yes	Yes	No	No	No	Yes	No	NA	Yes	Less than 8.33%	Less than or equal to 2%	Greater than 48 inches	1	36	76
1985	10/5/2015	Sandt DOT	Rochester	Gonic Road	Parallel	Concrete	Good	No	Yes	Yes	No	No	No	Yes	No	NA	Yes	Less than 8.33%	Less than or equal to 2%	Greater than 48 inches	1	36	76
1986	10/5/2015	Sandt DOT	Rochester	Gonic Road	Parallel	Concrete	Good	No	Yes	Yes	No	No	No	Yes	No	NA	Yes	Less than 8.33%	Less than or equal to 2%	Greater than 48 inches	1	36	76
1987	10/5/2015	Sandt DOT	Rochester	Gonic Road	Parallel	Concrete	Good	No	Yes	Yes	No	No	No	Yes	No	NA	Yes	Less than 8.33%	Less than or equal to 2%	Greater than 48 inches	1	36	76
1988	10/5/2015	Sandt DOT	Rochester	Gonic Road	Parallel	Concrete	Good	No	Yes	Yes	No	No	No	Yes	No	NA	Yes	Less than 8.33%	Less than or equal to 2%	Greater than 48 inches	1	36	76
1991	10/5/2015	Sandt DOT	Rochester	Gonic Road	Parallel	Concrete	Good	No	Yes	Yes	No	No	No	Yes	No	NA	Yes	Less than 8.33%	Less than or equal to 2%	Greater than 48 inches	1	36	76
1992	10/5/2015	Sandt DOT	Rochester	Gonic Road	Parallel	Concrete	Good	No	Yes	Yes	No	No	No	Yes	No	NA	Yes	Less than 8.33%	Less than or equal to 2%	Greater than 48 inches	1	36	76
1993	10/5/2015	Sandt DOT	Rochester	Gonic Road	Parallel	Concrete	Good	No	Yes	Yes	No	No	No	Yes	No	NA	Yes	Less than 8.33%	Less than or equal to 2%	Greater than 48 inches	1	36	76
2033	10/6/2015	Sandt DOT	Dover	Knox Marsh Road	Parallel	Concrete	Good	No	Yes	Yes	No	No	No	Yes	No	NA	Yes	Less than 8.33%	Less than or equal to 2%	Greater than 48 inches	1	36	76
2034	10/6/2015	Sandt DOT	Dover	Knox Marsh Road	Parallel	Concrete	Good	No	Yes	Yes	No	No	No	Yes	No	NA	Yes	Less than 8.33%	Less than or equal to 2%	Greater than 48 inches	1	36	76
2035	10/6/2015	Sandt DOT	Dover	Knox Marsh Road	Parallel	Concrete	Good	No	Yes	Yes	No	No	No	Yes	No	NA	Yes	Less than 8.33%	Less than or equal to 2%	Greater than 48 inches	1	36	76
2036	10/6/2015	Sandt DOT	Dover	Knox Marsh Road	Parallel	Concrete	Good	No	Yes	Yes	No	No	No	Yes	No	NA	Yes	Less than 8.33%	Less than or equal to 2%	Greater than 48 inches	1	36	76
1976	10/2/2015	Sandt DOT	Rochester	Gonic Road	Parallel	Concrete	Good	No	Yes	Yes	No	No	No	Yes	No	NA	Yes	Less than 8.33%	Less than or equal to 2%	Greater than 48 inches	1	36	76
1977	10/2/2015	Sandt DOT	Rochester	Gonic Road	Parallel	Concrete	Good	No	Yes	Yes	No	No	No	Yes	No	NA	Yes	Less than 8.33%	Less than or equal to 2%	Greater than 48 inches	1	36	76
1978	10/2/2015	Sandt DOT	Rochester	Gonic Road	Parallel	Concrete	Good	No	Yes	Yes	No	No	No	Yes	No	NA	Yes	Less than 8.33%	Less than or equal to 2%	Greater than 48 inches	1	36	76
1979	10/2/2015	Sandt DOT	Rochester	Gonic Road	Parallel	Concrete	Good	No	Yes	Yes	No	No	No	Yes	No	NA	Yes	Less than 8.33%	Less than or equal to 2%	Greater than 48 inches	1	36	76
25	6/12/2015	Sandt DOT	Concord	Noble Drive	Parallel	Concrete	Good	No	Yes	Yes	No	No	No	No	Yes	NA	Yes	Less than 8.33%	Less than or equal to 2%	Greater than 48 inches	1	36	76
26	6/12/2015	Sandt DOT	Concord	Noble Drive	Parallel	Concrete	Good	No	Yes	Yes	No	No	No	Yes	No	NA	Yes	Less than 8.33%	Less than or equal to 2%	Greater than 48 inches	1	36	76
27	6/12/2015	Sandt DOT	Concord	Noble Drive	Parallel	Concrete	Good	No	Yes	Yes	No	No	No	Yes	No	NA	Yes	Less than 8.33%	Less than or equal to 2%	Greater than 48 inches	1	36	76
28	6/12/2015	Sandt DOT	Concord	Noble Drive	Parallel	Concrete	Good	No	Yes	Yes	No	No	No	Yes	No	NA	Yes	Less than 8.33%	Less than or equal to 2%	Greater than 48 inches	1	36	76
2222	10/22/2015	Sandt DOT	Portsmouth	Manchester Square	Parallel	Concrete	Good	No	Yes	Yes	No	No	No	Yes	No	NA	Yes	Less than 8.33%	Less than or equal to 2%	Greater than 48 inches	1	36	76
2223	10/22/2015	Sandt DOT	Portsmouth	Manchester Square	Parallel	Concrete	Good	No	Yes	Yes	No	No	No	Yes	No	NA	Yes	Less than 8.33%	Less than or equal to 2%	Greater than 48 inches	1	36	76
2224	10/22/2015	Sandt DOT	Portsmouth	Manchester Square	Parallel	Concrete	Good	No	Yes	Yes	No	No	No	Yes	No	NA	Yes	Less than 8.33%	Less than or equal to 2%	Greater than 48 inches	1	36	76
2225	10/22/2015	Sandt DOT	Portsmouth	Manchester Square	Parallel	Concrete	Good	No	Yes	Yes	No	No	No	Yes	No	NA	Yes	Less than 8.33%	Less than or equal to 2%	Greater than 48 inches	1	36	76
2226	10/22/2015	Sandt DOT	Portsmouth	Manchester Square	Parallel	Concrete	Good	No	Yes	Yes	No	No	No	Yes	No	NA	Yes	Less than 8.33%	Less than or equal to 2%	Greater than 48 inches	1	36	76
1926	10/1/2015	Sandt DOT	Rochester	N Main	Perpendicular	Concrete	Good	No	Yes	Yes	No	No	No	Yes	No	NA	Yes	Less than 8.33%	Less than or equal to 2%	Greater than 48 inches	1	36	76
1927	10/1/2015	Sandt DOT	Rochester	N Main	Perpendicular	Concrete	Good	No	Yes	Yes	No	No	No	Yes	No	NA	Yes	Less than 8.33%	Less than or equal to 2%	Greater than 48 inches	1	36	76
1928	10/1/2015	Sandt DOT	Rochester	N Main	Perpendicular	Concrete	Good	No	Yes	Yes	No	No	No	Yes	No	NA	Yes	Less than 8.33%	Less than or equal to 2%	Greater than 48 inches	1	36	76
1929	10/1/2015	Sandt DOT	Rochester	N Main	Perpendicular	Concrete	Good	No	Yes	Yes	No	No	No	Yes	No	NA	Yes	Less than 8.33%	Less than or equal to 2%	Greater than 48 inches	1	36	76
1932	10/1/2015	Sandt DOT	Rochester	N Main	Perpendicular	Concrete	Good	No	Yes	Yes	No	No	No	Yes	No	NA	Yes	Less than 8.33%	Less than or equal to 2%	Greater than 48 inches	1	36	76
1933	10/1/2015	Sandt DOT	Rochester	N Main	Perpendicular	Concrete	Good	No	Yes	Yes	No	No	No	Yes	No	NA	Yes	Less than 8.33%	Less than or equal to 2%	Greater than 48 inches	1	36	76

1934	10/1/2015	Sandt DOT	Rochester	N Main	Perpendicular	Concrete	Good	No	Yes	Yes	No	No	No	Yes	No	NA	Yes	Less than 8.33%	Less than or equal to 2%	Greater than 48 inches	1	36	76
1935	10/1/2015	Sandt DOT	Rochester	N Main	Parallel	Concrete	Good	No	Yes	Yes	No	No	No	Yes	No	NA	Yes	Less than 8.33%	Less than or equal to 2%	Greater than 48 inches	1	36	76
1936	10/1/2015	Sandt DOT	Rochester	N Main	Parallel	Concrete	Good	No	Yes	Yes	No	No	No	Yes	No	NA	Yes	Less than 8.33%	Less than or equal to 2%	Greater than 48 inches	1	36	76
1937	10/1/2015	Sandt DOT	Rochester	N Main	Parallel	Concrete	Good	No	Yes	Yes	No	No	No	Yes	No	NA	Yes	Less than 8.33%	Less than or equal to 2%	Greater than 48 inches	1	36	76
1938	10/1/2015	Sandt DOT	Rochester	N Main	Parallel	Concrete	Good	No	Yes	Yes	No	No	No	Yes	No	NA	Yes	Less than 8.33%	Less than or equal to 2%	Greater than 48 inches	1	36	76
1945	10/1/2015	Sandt DOT	Rochester	N Main	Parallel	Concrete	Good	No	Yes	Yes	No	No	No	Yes	No	NA	Yes	Less than 8.33%	Less than or equal to 2%	Greater than 48 inches	1	36	76
1946	10/1/2015	Sandt DOT	Rochester	N Main	Parallel	Concrete	Good	No	Yes	Yes	No	No	No	Yes	No	NA	Yes	Less than 8.33%	Less than or equal to 2%	Greater than 48 inches	1	36	76
1947	10/1/2015	Sandt DOT	Rochester	N Main	Parallel	Concrete	Good	No	Yes	Yes	No	No	No	Yes	No	NA	Yes	Less than 8.33%	Less than or equal to 2%	Greater than 48 inches	1	36	76
1948	10/1/2015	Sandt DOT	Rochester	N Main	Parallel	Concrete	Good	No	Yes	Yes	No	No	No	Yes	No	NA	Yes	Less than 8.33%	Less than or equal to 2%	Greater than 48 inches	1	36	76
1952	10/1/2015	Sandt DOT	Rochester	N Main	Perpendicular	Concrete	Good	No	Yes	Yes	No	No	No	Yes	No	NA	Yes	Less than 8.33%	Less than or equal to 2%	Greater than 48 inches	1	36	76
1953	10/1/2015	Sandt DOT	Rochester	N Main	Perpendicular	Concrete	Good	No	Yes	Yes	No	No	No	Yes	No	NA	Yes	Less than 8.33%	Less than or equal to 2%	Greater than 48 inches	1	36	76
1954	10/1/2015	Sandt DOT	Rochester	N Main	Parallel	Concrete	Good	No	Yes	Yes	No	No	No	Yes	No	NA	Yes	Less than 8.33%	Less than or equal to 2%	Greater than 48 inches	1	36	76
1816	9/23/2015	Sandt DOT	Lebanon	Rt 4A	Parallel	Concrete	Good	No	Yes	Yes	No	No	No	Yes	No	NA	Yes	Less than 8.33%	Less than or equal to 2%	Greater than 48 inches	1	36	76
1817	9/23/2015	Sandt DOT	Lebanon	Rt 4A	Parallel	Concrete	Good	No	Yes	Yes	No	No	No	Yes	No	NA	Yes	Less than 8.33%	Less than or equal to 2%	Greater than 48 inches	1	36	76
1629	8/28/2015	Sandt DOT	Troy	Central Square	Parallel	Concrete	Good	No	Yes	Yes	No	No	No	Yes	No	NA	Yes	Less than 8.33%	Less than or equal to 2%	Greater than 48 inches	1	36	76
1630	8/28/2015	Sandt DOT	Troy	Central Square	Parallel	Concrete	Good	No	Yes	Yes	No	No	No	Yes	No	NA	Yes	Less than 8.33%	Less than or equal to 2%	Greater than 48 inches	1	36	76
1631	8/28/2015	Sandt DOT	Troy	Central Square	Parallel	Concrete	Good	No	Yes	Yes	No	No	No	Yes	No	NA	Yes	Less than 8.33%	Less than or equal to 2%	Greater than 48 inches	1	36	76
1632	8/28/2015	Sandt DOT	Troy	Central Square	Parallel	Concrete	Good	No	Yes	Yes	No	No	No	Yes	No	NA	Yes	Less than 8.33%	Less than or equal to 2%	Greater than 48 inches	1	36	76
1633	8/28/2015	Sandt DOT	Troy	Central Square	Combined	Concrete	Good	No	Yes	Yes	No	No	No	Yes	No	NA	Yes	Less than 8.33%	Less than or equal to 2%	Greater than 48 inches	1	36	76
1584	8/24/2015	Sandt DOT	Dublin	Main	Parallel	Concrete	Good	No	Yes	Yes	No	No	No	Yes	No	NA	Yes	Less than 8.33%	Less than or equal to 2%	Greater than 48 inches	1	36	76
1585	8/24/2015	Sandt DOT	Dublin	Main	Perpendicular	Concrete	Good	No	Yes	Yes	No	No	No	Yes	No	NA	Yes	Less than 8.33%	Less than or equal to 2%	Greater than 48 inches	1	36	76
1586	8/24/2015	Sandt DOT	Dublin	Main	Perpendicular	Concrete	Good	No	Yes	Yes	No	No	No	Yes	No	NA	Yes	Less than 8.33%	Less than or equal to 2%	Greater than 48 inches	1	36	76
1487	8/12/2015	Sandt DOT	Amherst	101A	Parallel	Concrete	Good	No	Yes	Yes	No	No	No	Yes	No	NA	Yes	Less than 8.33%	Less than or equal to 2%	Greater than 48 inches	1	36	76
330	7/14/2015	Sandt DOT	Hudson	Derry Street	Parallel	Concrete	Good	No	Yes	Yes	No	No	No	Yes	No	NA	Yes	Less than 8.33%	Less than or equal to 2%	Greater than 48 inches	1	36	76
322	7/13/2015	Sandt DOT	Nashua	Daniel Webster Hwy	Perpendicular	Concrete	Good	No	Yes	Yes	No	No	No	Yes	No	Yes	Yes	Less than 8.33%	Less than or equal to 2%	Greater than 48 inches	1	36	76
323	7/13/2015	Sandt DOT	Nashua	Daniel Webster Hwy	Perpendicular	Concrete	Good	No	Yes	Yes	No	No	No	Yes	No	Yes	Yes	Less than 8.33%	Less than or equal to 2%	Greater than 48 inches	1	36	76
203	7/7/2015	Sandt DOT	Concord	Foundry Street	Perpendicular	Concrete	Good	No	Yes	Yes	No	No	No	Yes	No	NA	Yes	Less than 8.33%	Less than or equal to 2%	Greater than 48 inches	1	36	76
209	7/7/2015	Sandt DOT	Concord	Foundry Street	Parallel	Concrete	Good	No	Yes	Yes	No	No	No	Yes	No	NA	Yes	Less than 8.33%	Less than or equal to 2%	Greater than 48 inches	1	36	76
214	7/7/2015	Sandt DOT	Concord	Foundry Street	Parallel	Concrete	Good	No	Yes	Yes	No	No	No	Yes	No	NA	Yes	Less than 8.33%	Less than or equal to 2%	Greater than 48 inches	1	36	76
65	6/17/2015	Sandt DOT	Allenstown	Main	Parallel	Concrete	Good	No	Yes	Yes	No	No	No	Yes	No	NA	Yes	Less than 8.33%	Less than or equal to 2%	Greater than 48 inches	1	36	76
1680	9/3/2015	Sandt DOT	Keene	Rt 12-Rt 102	Parallel	Concrete	Good	No	Yes	Yes	No	No	No	Yes	No	NA	Yes	Less than 8.33%	Less than or equal to 2%	Greater than 48 inches	1	36	76
1973	10/2/2015	Sandt DOT	Rochester	Gonic Road	Parallel	Concrete	Good	No	Yes	Yes	No	No	No	Yes	No	NA	Yes	Less than 8.33%	Less than or equal to 2%	Greater than 48 inches	1	36	76
1811	9/23/2015	Sandt DOT	Hanover	Greensboro Road	Parallel	Concrete	Good	No	Yes	Yes	No	No	No	Yes	No	NA	Yes	Less than 8.33%	Less than or equal to 2%	Greater than 48 inches	1	36	76
1695	9/4/2015	Sandt DOT	Keene	Winchester Street	Diagonal	Concrete	Good	No	Yes	Yes	No	No	No	Yes	No	NA	Yes	Less than 8.33%	Less than or equal to 2%	Greater than 48 inches	1	36	76
2316	10/29/2015	Sandt DOT	Hampton	Ocean Blvd	Parallel	Concrete	Good	No	Yes	Yes	No	No	No	Yes	No	NA	Yes	Less than 8.33%	Less than or equal to 2%	Greater than 48 inches	1	36	76
2317	10/29/2015	Sandt DOT	Hampton	Ocean Blvd	Parallel	Concrete	Good	No	Yes	Yes	No	No	No	Yes	No	NA	Yes	Less than 8.33%	Less than or equal to 2%	Greater than 48 inches	1	36	76
2419	10/29/2015	Sandt DOT	Hampton	Ocean Blvd	Parallel	Concrete	Good	No	Yes	Yes	No	No	No	Yes	No	NA	Yes	Less than 8.33%	Less than or equal to 2%	Greater than 48 inches	1	36	76
2420	10/29/2015	Sandt DOT	Hampton	Ocean Blvd	Parallel	Concrete	Good	No	Yes	Yes	No	No	No	Yes	No	NA	Yes	Less than 8.33%	Less than or equal to 2%	Greater than 48 inches	1	36	76
84	6/22/2015	Sandt DOT	Hooksett	Hooksett rest area southbound	Parallel	Concrete	Good	No	Yes	Yes	No	No	No	Yes	No	NA	Yes	Less than 8.33%	Less than or equal to 2%	Greater than 48 inches	1	36	76
85	6/22/2015	Sandt DOT	Hooksett	Hooksett rest area southbound	Perpendicular	Concrete	Good	No	Yes	Yes	No	No	No	Yes	No	NA	Yes	Less than 8.33%	Less than or equal to 2%	Greater than 48 inches	1	36	76
87	6/22/2015	Sandt DOT	Hooksett	Hooksett rest area southbound	Parallel	Concrete	Good	No	Yes	Yes	No	No	No	Yes	No	NA	Yes	Less than 8.33%	Less than or equal to 2%	Greater than 48 inches	1	36	76
2284	10/26/2015	Sandt DOT	North Hampton	Ocean Blvd	Perpendicular	Concrete	Good	No	Yes	Yes	No	No	No	Yes	No	NA	Yes	Less than 8.33%	Less than or equal to 2%	Greater than 48 inches	1	36	76
161	7/2/2015	Sandt DOT	Manchester	Hanover Street	Parallel	Concrete	Good	No	Yes	Yes	No	No	No	Yes	No	NA	Yes	Less than 8.33%	Less than or equal to 2%	Greater than 48 inches	1	36	76
159	7/2/2015	Sandt DOT	Manch	Hanover Street	Parallel	Concrete	Good	No	Yes	Yes	No	No	No	Yes	No	NA	Yes	Less than 8.33%	Less than or equal to 2%	Greater than 48 inches	1	36	76
154	6/30/2015	Sandt DOT	Manchester	Hanover Street	Parallel	Concrete	Good	No	Yes	Yes	No	No	No	Yes	No	NA	Yes	Less than 8.33%	Less than or equal to 2%	Greater than 48 inches	1	36	76
156	6/30/2015	Sandt DOT	Manchester	Hanover Street	Parallel	Concrete	Good	No	Yes	Yes	No	No	No	Yes	No	NA	Yes	Less than 8.33%	Less than or equal to 2%	Greater than 48 inches	1	36	76
157	6/30/2015	Sandt DOT	Manchester	Hanover Street	Parallel	Concrete	Good	No	Yes	Yes	No	No	No	Yes	No	NA	Yes	Less than 8.33%	Less than or equal to 2%	Greater than 48 inches	1	36	76
63	6/17/2015	Sandt DOT	Allenstown	Main	Parallel	Concrete	Good	No	Yes	Yes	No	No	No	Yes	No	NA	Yes	Less than 8.33%	Less than or equal to 2%	Greater than 48 inches	1	36	76
4074	3/7/2016	Sandt DOT	Swanzey	Rt 12	Perpendicular	Concrete	Good	No	Yes	Yes	No	No	No	Yes	No	NA	Yes	Less than 8.33%	Less than or equal to 2%	Greater than 48 inches	1	36	76
2958	1/11/2016	Wilkinson District 1	Lincoln	Rte. 112	Parallel	Concrete	Good	No	Yes	Yes	No	No	No	Yes	No	NA	Yes	Less than 8.33%	Less than or equal to 2%	Greater than 48 inches	1	36	76
2959	1/11/2016	Wilkinson District 1	Lincoln	Rte. 112	Perpendicular	Concrete	Good	No	Yes	Yes	No	No	No	Yes	No	NA	Yes	Less than 8.33%	Less than or equal to 2%	Greater than 48 inches	1	36	76
2815	12/17/2015	Wilkinson District 1	Warren	Rte.118	Parallel	Concrete	Good	No	Yes	Yes	No	No	No	Yes	No	NA	Yes	Less than 8.33%	Less than or equal to 2%	Greater than 48 inches	1	36	76
2816	12/17/2015	Wilkinson District 1	Warren	Rte.118	Parallel	Concrete	Good	No	Yes	Yes	No	No	No	Yes	No	NA	Yes	Less than 8.33%	Less than or equal to 2%	Greater than 48 inches	1	36	76
2584	11/25/2015	Sandt DOT	Alton	Rt 11	Parallel	Concrete	Good	No	Yes	Yes	No	No	No	Yes	No	NA	Yes	Less than 8.33%	Less than or equal to 2%	Greater than 48 inches	1	36	76
2488	11/16/2015	Sandt DOT	Madison	113	Parallel	Concrete	Good	No	Yes	Yes	No	No	No	Yes	No	NA	Yes	Less than 8.33%	Less than or equal to 2%	Greater than 48 inches	1	36	76
2489	11/16/2015	Sandt DOT	Madison	113	Parallel	Concrete	Good	No	Yes	Yes	No	No	No	Yes	No	NA	Yes	Less than 8.33%	Less than or equal to 2%	Greater than 48 inches	1	36	76
2490	11/16/2015	Sandt DOT	Madison	113	Parallel	Concrete	Good	No	Yes	Yes	No	No	No	Yes	No	NA	Yes	Less than 8.33%	Less than or equal to 2%	Greater than 48 inches	1	36	76
2491	11/16/2015	Sandt DOT	Madison	113	Parallel	Concrete	Good	No	Yes	Yes	No	No	No	Yes	No	NA	Yes	Less than 8.33%	Less than or equal to 2%	Greater than 48 inches	1	36	76
2492	11/16/2015	Sandt DOT	Ossipee	25	Parallel	Concrete	Good	No	Yes	Yes	No	No	No	Yes	No	NA	Yes	Less than 8.33%	Less than or equal to 2%	Greater than 48 inches	1	36	76
2493	11/16/2015	Sandt DOT	Ossipee	25	Parallel	Concrete	Good	No	Yes	Yes	No	No	No	Yes	No	NA	Yes	Less than 8.33%	Less than or equal to 2%	Greater than 48 inches	1	36	76
2494	11/16/2015	Sandt DOT	Ossipee	25	Parallel	Concrete	Good	No	Yes	Yes	No	No	No	Yes	No	NA	Yes	Less than 8.33%	Less than or equal to 2%	Greater than 48 inches	1	36	76
2495	11/16/2015	Sandt DOT	Ossipee	25	Parallel	Concrete	Good	No	Yes	Yes	No	No	No	Yes	No	NA	Yes	Less than 8.33%	Less than or equal to 2%	Greater than 48 inches	1	36	76
2496	11/16/2015	Sandt DOT	Ossipee	25	Parallel	Concrete	Good	No	Yes	Yes	No	No	No	Yes	No	NA	Yes	Less than 8.33%	Less than or equal to 2%	Greater than 48 inches	1	36	76
2497	11/16/2015	Sandt DOT	Ossipee	25	Parallel	Concrete	Good	No	Yes	Yes	No	No	No	Yes	No	NA	Yes	Less than 8.33%	Less than or equal to 2%	Greater than 48 inches	1	36	76
2498	11/16/2015	Sandt DOT	Ossipee	25	Parallel	Concrete	Good	No	Yes	Yes	No	No	No	Yes	No	NA	Yes	Less than 8.33%	Less than or equal to 2%	Greater than 48 inches	1	36	76
2499	11/16/2015	Sandt DOT	Ossipee	25	Parallel	Concrete	Good	No	Yes	Yes	No	No	No	Yes	No	NA	Yes	Less than 8.33%	Less than or equal to 2%	Greater than 48 inches	1	36	76
2739	12/10/2015	Sandt DOT	Laconia	Rt 3	Diagonal	Concrete	Good	No	Yes	Yes	No	No	Yes	Yes	NA	NA	Yes	Less than 8.33%	Less than or equal to 2%	Greater than 48 inches	1	36	76
382	7/17/2015	TEST	TEST		Perpendicular	Concrete	Good	No	Yes	Yes	No	No	No	Yes	No	NA	Yes	Less than 8.33%	Less than or equal to 2%	Greater than 48 inches	1	36	76
2480		NM SWRPC	Hinsdale	Main St	Perpendicular	Concrete	Good	No	Yes	Yes	No	No	No	Yes	No	NA	Yes	Less than 8.33%	Less than or equal to 2%	Greater than 48 inches	1	36	76
2983	1/26/2016	Nichols district 1	Conway	Rte 302/16	Parallel	Concrete	Good	Yes	Yes	No	No	Yes	No	Yes	NA	NA	Yes	Less than 8.33%	Less than or equal to 2%	36 to 48 inches	1	36	76
2867	12/28/2015	NM SWRPC	Hinsdale	School st	Perpendicular	Concrete	Good	Yes	Yes	No	No	Yes	No	Yes	Yes	NA	Yes	Less than 8.33%	Less than or equal to 2%	36 to 48 inches	1	36	76
1737	9/14/2015	Sandt DOT	Charlestown	Rt 12	Perpendicular	Concrete	Good	Yes	Yes	Yes	No	No	No	Yes	Yes	NA	Yes	Greater than 12.5%	Greater than 2%	Greater than 48 inches	1	35	76
194	7/6/2015	Sandt DOT	Manchester	S Willow Street	Parallel	Concrete	Good	Yes	Yes	Yes	No	No	No	Yes	Yes	NA	Yes	Greater than 12.5%	Greater than 2%	Greater than 48 inches	1	35	76
195	7/6/2015	Sandt DOT	Manchester	S Willow Street	Parallel	Concrete	Good	Yes	Yes	Yes	No	No	No	Yes	Yes	NA	Yes	Greater than 12.5%	Greater than 2%	Greater than 48 inches	1	35	76
199	7/6/2015	Sandt DOT	Bedford	S River Road	Perpendicular	Concrete	Good	Yes	Yes	Yes	No	No	No	Yes	Yes	NA	Yes	Greater than 12.5%	Greater than 2%	Greater than 48 inches	1	35	76
202	7/6/2015	Sandt DOT	Bedford	S River Road	Perpendicular	Concrete	Good	Yes	Yes	Yes	No	No	No	Yes	Yes	NA	Yes	Greater than 12.5%	Greater than 2%	Greater than 48 inches	1	35	76
1516	8/14/2015	Sandt DOT	Hillsborough	W Main Street	Diagonal	Concrete	Good	Yes	Yes	Yes	No	No	No	Yes	Yes	Yes	Yes	Greater than 12.5%	Greater than 2%	Greater than 48 inches	1	35	76
3015	2/8/2016	Wilkinson District 1	Conway	Rtes. 16 & 302	Parallel	Concrete	Fair	Yes	Yes	Yes	No	No	No	Yes	Yes	NA	Yes	10% to 12.5%	Greater than 2%	Greater than 48 inches	1	35	76
1317	7/23/2015	Sandt DOT	Derry	S Main St.	Parallel	Asphalt	Good	Yes	Yes	No	No	No	No	Yes	Yes	NA	Yes	8.33% to 10%	Less than or equal to 2%	Greater than 48 inches	1	35	76
2918	1/7/2016	Sandt DOT	New London	Rt 114	Perpendicular	Asphalt	Good	Yes	Yes	No	No	No	No	Yes	Yes	NA	Yes	Less than 8.33%	Greater than 2%	36 to 48 inches	1	35	76
2047	10/7/2015	Sandt DOT	Newington	Gosling Road	Diagonal	Asphalt	Fair	Yes	Yes	No	No	No	No	Yes	Yes	Yes	Yes	Less than 8.33%	Less than or equal to 2%	Greater than 48 inches	1	35	76
1247	7/22/2015	Sandt DOT	Londonderry	Nashua Road	Perpendicular	Asphalt	Fair	Yes	Yes	No	No	No	No	Yes	Yes	NA	Yes	Less than 8.33%	Less than or equal to 2%	Greater than 48 inches	1	35	76
1248	7/22/2015	Sandt DOT	Londonderry	Nashua Road	Perpendicular	Asphalt	Fair	Yes	Yes	No	No	No	No	Yes	Yes	NA	Yes	Less than 8.33%	Less than or equal to 2%	Greater than 48 inches	1	35	76
30	6/12/2015	Sandt DOT	Concord	Noble Drive	Combined	Concrete	Good	Yes	Yes	No	No	No	No	Yes	Yes	NA	Yes	Less than 8.33%	Greater than 2%	Greater than 48 inches	1	35	76
1594	8/24/2015	Sandt DOT	Jaffrey	Main Street	Diagonal	Asphalt	Fair	Yes	Yes	No	No	No	No	Yes	Yes	NA	Yes	Less than 8.33%	Less than or equal to 2%	Greater than 48 inches	1	35	76
1489	8/12/2015	Sandt DOT	Amherst	101A	Diagonal	Asphalt	Good	Yes	Yes	No	No	No	No	Yes	Yes	NA	Yes	8.33% to 10%	Less than or equal to 2%	Greater than 48 inches	1	35	76
1495	8/12/2015	Sandt DOT	Amherst	101A	Diagonal	Asphalt	Good	Yes	Yes	No	No	No	No	Yes	Yes	NA	Yes	8.33% to 10%	Less than or equal to 2%	Greater than 48 inches	1	35	76
1497	8/12/2015	Sandt DOT	Amherst	101A	Diagonal	Asphalt	Good	Yes	Yes	No	No	No	No	Yes	Yes	NA	Yes	8.33% to 10%	Less than or equal to 2%	Greater than 48 inches	1	35	76
1830	9/24/2015	Sandt DOT	Enfield	U.S. 4	Perpendicular	Concrete	Good	Yes	Yes	No	No	No	No	Yes	Yes	NA	Yes	Less than 8.33%	Greater than 2%	Greater than 48 inches	1	35	76
1318	7/23/2015	Sandt DOT	Derry	S Main St.	Parallel	Asphalt	Good	Yes	Yes	No	No	No	No	Yes	Yes	NA	Yes	8.33% to 10%	Less than or equal to 2%	Greater than 48 inches	1	35	76
1319	7/23/2015	Sandt DOT	Derry	S Main St.	Parallel	Asphalt	Good	Yes	Yes	No	No	No	No	Yes	Yes	NA	Yes	8.33% to 10%	Less than or equal to 2%	Greater than 48 inches	1	35	76
1320	7/23/2015	Sandt DOT	Derry	S Main St.	Parallel	Asphalt	Good	Yes	Yes	No	No	No	No	Yes	Yes	NA	Yes	8.33% to 10%	Less than or equal to 2%	Greater than 48 inches	1	35	76
2861	12/28/2015	Sandt DOT	Meredith	Rt 3	Diagonal	Asphalt	Fair	Yes	Yes	No	No	No	No	Yes	Yes	Yes	Yes	Less than 8.33%	Less than or equal to 2%	Greater than 48 inches	1	35	76
2978	1/27/2016	Wilkinson District 1	Conway	Rte. 16 and 302	Parallel	Concrete	Good	Yes	Yes	No	No	No	No	Yes	Yes	Yes	Yes	Less than 8.33%	Greater than 2%	Greater than 48 inches	1	35	76
2979	1/27/2016	Wilkinson District 1	Conway	Rte. 16 and 302	Parallel	Concrete	Good	Yes	Yes	No	No	No	No	Yes	Yes	Yes	Yes	Less than 8.33%	Greater than 2%	Greater than 48 inches	1	35	76
2980	1/27/2016	Wilkinson District 1	Conway	Rte. 16 and 302	Parallel	Concrete	Good	Yes	Yes	No	No	No	No	Yes	Yes	Yes	Yes	Less than 8.33%	Greater than 2%	Greater than 48 inches	1	35	76
2981	1/27/2016	Wilkinson District 1	Conway	Rte. 16 and 302	Parallel	Concrete	Good	Yes	Yes	No	No	No	No	Yes	Yes	Yes	Yes	Less than 8.33%	Greater than 2%	Greater than 48 inches	1	35	76
2613	12/1/2015	Sandt DOT	Concord	Rt 3	Perpendicular	Concrete	Good	Yes	Yes	No	No	No	No	Yes	Yes	NA	Yes	Less than 8.33%	Greater than 2%	Greater than 48 inches	1	35	76
4106	3/16/2016	Sandt DOT	Plaistow	Rt 125	Perpendicular	Asphalt	Good	Yes	Yes	No	No	No	No	Yes	Yes	NA	Yes	Less than 8.33%	Greater than 2%	36 to 48 inches	1	35	76
4108	3/16/2016	Sandt DOT	Plaistow	Rt 125	Perpendicular	Asphalt	Good	Yes	Yes	No	No	No	No	Yes	Yes	NA	Yes	Less than 8.33%	Greater than 2%	36 to 48 inches	1	35	76
4109	3/16/2016	Sandt DOT	Plaistow	Rt 125	Diagonal	Asphalt	Good	Yes	Yes	No	No	No	No	Yes	Yes	Yes	Yes	Less than 8.33%	Greater than 2%	36 to 48 inches	1	35	76
2344	11/2/2015	Melendy district one	Colebrook	Rte26	Parallel	Concrete	Good	Yes	No	Yes	No	No	No	Yes	Yes	NA	Yes	Less than 8.33%	Greater than 2%	36 to 48 inches	1	34	77
2345	11/2/2015	Melendy district one	Colebrook	Rte26	Parallel	Concrete	Good	Yes	Yes	Yes	No	No	No	Yes	No	NA	Yes	Less than 8.33%	Greater than 2%	36 to 48 inches	1	34	77
127	6/26/2015	MC SWRPC	North Walpole	Russell Street	Perpendicular	Concrete	Good	Yes	Yes	Yes	No	No	No	Yes	Yes	NA	Yes	Less than 8.33%	Greater than 2%	36 to 48 inches	1	34	77
3004	2/2/2016	Wilkinson District 1	Conway	Rtes. 16 & 302	Perpendicular	Concrete	Good	Yes	Yes	Yes	No	No	No	Yes	No	NA	Yes	8.33% to 10%	Less than or equal to 2%	Greater than 48 inches	1	34	77
2774	12/16/2015	Nichols district 1	Littleton	Rte 302	Combined	Concrete	Fair	Yes	Yes	Yes	No	Yes	No	Yes	NA	NA	Yes	8.33% to 10%	Greater than 2%	Greater than 48 inches	1	33	78
1280	7/23/2015	Sandt DOT	Derry	E Broadway	Perpendicular	Stamped Asphalt	Good	Yes	Yes	No	No	No	No	Yes	Yes	NA	Yes	Less than 8.33%	Less than or equal to 2%	Greater than 48 inches	1	33	78
1265	7/22/2015	Sandt DOT	Derry	E Broadway	Perpendicular	Stamped Asphalt	Good	Yes	Yes	No	No	No	No	Yes	Yes	NA	Yes	Less than 8.33%	Less than or equal to 2%	Greater than 48 inches	1	33	78
1268	7/22/2015	Sandt DOT	Derry	W Broadway	Parallel	Stamped Asphalt	Good	Yes	Yes	No	No	No	No	Yes	Yes	NA	Yes	Less than 8.33%	Less than or equal to 2%	Greater than 48 inches	1	33	78
1269	7/22/2015	Sandt DOT	Derry	W Broadway	Parallel	Stamped Asphalt	Good	Yes	Yes	No	No	No	No	Yes	Yes	NA	Yes	Less than 8.33%	Less than or equal to 2%	Greater than 48 inches	1	33	78
1277	7/22/2015	Sandt DOT	Derry	W Broadway	Perpendicular	Stamped Asphalt	Good	Yes	Yes	No	No	No	No	Yes	Yes	NA	Yes	Less than 8.33%	Less than or equal to 2%	Greater than 48 inches	1	33	78
1578	8/20/2015	Sandt DOT	Peterborough	Grove Street	Diagonal	Concrete	Good	Yes	Yes	No	No	No	No	Yes	Yes	NA	Yes	Less than 8.33%	Less than or equal to 2%	36 to 48 inches	1	33	78
1579	8/20/2015	Sandt DOT	Peterborough	Grove Street	Diagonal	Concrete	Good	Yes	Yes	No	No	No	No	Yes	Yes	NA	Yes	Less than 8.33%	Less than or equal to 2%	36 to 48 inches	1	33	78

1835	9/24/2015	Sandt DOT	Enfield	Main	Diagonal	Stamped Asphalt	Good	Yes	Yes	No	No	No	No	Yes	Yes	Yes	Yes	Less than 8.33%	Less than or equal to 2%	Greater than 48 inches	1	33	78
1275	7/22/2015	Sandt DOT	Derry	W Broadway	Perpendicular	Stamped Asphalt	Good	Yes	Yes	No	No	No	No	Yes	Yes	NA	Yes	Less than 8.33%	Less than or equal to 2%	Greater than 48 inches	1	33	78
1780	9/21/2015	Sandt DOT	Hanover	Rt 10	Perpendicular	Stamped Asphalt	Good	Yes	Yes	No	No	No	No	Yes	Yes	NA	Yes	Less than 8.33%	Less than or equal to 2%	Greater than 48 inches	1	33	78
4111	3/16/2016	Sandt DOT	Plaistow	Rt 125	Parallel	Concrete	Good	Yes	Yes	No	No	No	No	Yes	Yes	Yes	Yes	Less than 8.33%	Less than or equal to 2%	36 to 48 inches	1	33	78
2175	10/20/2015	Sandt DOT	Exeter	Portsmouth Ave	Perpendicular	Asphalt	Good	No	Yes	Yes	No	No	No	Yes	No	NA	Yes	Less than 8.33%	Less than or equal to 2%	Greater than 48 inches	1	32	78
2176	10/20/2015	Sandt DOT	Exeter	Portsmouth Ave	Perpendicular	Asphalt	Good	No	Yes	Yes	No	No	No	Yes	No	NA	Yes	Less than 8.33%	Less than or equal to 2%	Greater than 48 inches	1	32	78
2184	10/20/2015	Sandt DOT	Exeter	Portsmouth Ave	Perpendicular	Asphalt	Good	No	Yes	Yes	No	No	No	Yes	No	NA	Yes	Less than 8.33%	Less than or equal to 2%	Greater than 48 inches	1	32	78
2185	10/20/2015	Sandt DOT	Exeter	Portsmouth Ave	Perpendicular	Asphalt	Good	No	Yes	Yes	No	No	No	Yes	No	NA	Yes	Less than 8.33%	Less than or equal to 2%	Greater than 48 inches	1	32	78
2186	10/20/2015	Sandt DOT	Exeter	Portsmouth Ave	Perpendicular	Asphalt	Good	No	Yes	Yes	No	No	No	Yes	No	NA	Yes	Less than 8.33%	Less than or equal to 2%	Greater than 48 inches	1	32	78
2050	10/7/2015	Sandt DOT	Newington	Gosling Road	Parallel	Asphalt	Good	No	Yes	Yes	No	No	No	Yes	No	NA	Yes	Less than 8.33%	Less than or equal to 2%	Greater than 48 inches	1	32	78
111	6/26/2015	MC SWRPC	North Walpole	Church Street	Parallel	Concrete	Good	No	Yes	Yes	No	No	No	Yes	Yes	NA	Yes	8.33% to 10%	Greater than 2%	Greater than 48 inches	1	32	78
2961	1/13/2016	Nichols district 1	Woodsville	Rte 302	Parallel	Concrete	Good	No	Yes	Yes	No	No	No	Yes	NA	NA	Yes	8.33% to 10%	Greater than 2%	Greater than 48 inches	1	32	78
2920	1/8/2016	Sandt DOT	New London	Newport Road	Parallel	Concrete	Good	No	Yes	Yes	No	No	No	Yes	NA	NA	Yes	8.33% to 10%	Greater than 2%	Greater than 48 inches	1	32	78
342	7/15/2015	Sandt DOT	Salem	N Broadway	Diagonal	Concrete	Good	Yes	Yes	No	No	Yes	No	Yes	Yes	NA	Yes	Less than 8.33%	Less than or equal to 2%	Greater than 48 inches	1	32	78
343	7/15/2015	Sandt DOT	Salem	N Broadway	Diagonal	Concrete	Good	Yes	Yes	No	No	Yes	No	Yes	Yes	NA	Yes	Less than 8.33%	Less than or equal to 2%	Greater than 48 inches	1	32	78
344	7/15/2015	Sandt DOT	Salem	N Broadway	Diagonal	Concrete	Good	Yes	Yes	No	No	Yes	No	Yes	Yes	NA	Yes	Less than 8.33%	Less than or equal to 2%	Greater than 48 inches	1	32	78
237	7/9/2015	Sandt DOT	Merrimack	Greeley Street	Combined	Concrete	Good	Yes	Yes	No	No	Yes	No	Yes	Yes	NA	Yes	Less than 8.33%	Less than or equal to 2%	Greater than 48 inches	1	32	78
249	7/9/2015	Sandt DOT	Merrimack	Greeley Street	Combined	Concrete	Good	Yes	Yes	No	No	Yes	No	Yes	Yes	NA	Yes	Less than 8.33%	Less than or equal to 2%	Greater than 48 inches	1	32	78
2073	10/8/2015	Sandt DOT	Durham	Main Street	Diagonal	Concrete	Good	Yes	Yes	No	No	Yes	No	Yes	Yes	Yes	Yes	Less than 8.33%	Less than or equal to 2%	Greater than 48 inches	1	32	78
2074	10/8/2015	Sandt DOT	Durham	Main Street	Diagonal	Concrete	Good	Yes	Yes	No	No	Yes	No	Yes	Yes	Yes	Yes	Less than 8.33%	Less than or equal to 2%	Greater than 48 inches	1	32	78
2075	10/8/2015	Sandt DOT	Durham	Main Street	Diagonal	Concrete	Good	Yes	Yes	No	No	Yes	No	Yes	Yes	Yes	Yes	Less than 8.33%	Less than or equal to 2%	Greater than 48 inches	1	32	78
2880	1/4/2016	Nichols district 1	Woodsville	Rte 302	Perpendicular	Concrete	Good	Yes	Yes	No	No	Yes	No	Yes	NA	NA	Yes	Less than 8.33%	Less than or equal to 2%	Greater than 48 inches	1	32	78
2922	1/8/2016	Sandt DOT	New London	Newport Road	Parallel	Concrete	Good	No	Yes	Yes	No	No	No	Yes	NA	NA	Yes	10% to 12.5%	Less than or equal to 2%	Greater than 48 inches	1	31	79
2557	11/25/2015	Nichols district 1	Gorham	Rte 16	Parallel	Concrete	Good	No	Yes	Yes	No	No	No	Yes	NA	No	Yes	Less than 8.33%	Less than or equal to 2%	Greater than 48 inches	1	31	79
2558	11/25/2015	Nichols district 1	Gorham	Rte 16	Parallel	Concrete	Good	No	Yes	Yes	No	No	No	Yes	NA	No	Yes	Less than 8.33%	Less than or equal to 2%	Greater than 48 inches	1	31	79
1606	8/27/2015	Sandt DOT	Jaffrey	Main Street	Perpendicular	Asphalt	Good	Yes	Yes	No	No	No	No	Yes	Yes	NA	Yes	Less than 8.33%	Greater than 2%	Greater than 48 inches	1	31	79
1608	8/27/2015	Sandt DOT	Jaffrey	Main Street	Perpendicular	Asphalt	Good	Yes	Yes	No	No	No	No	Yes	Yes	NA	Yes	Less than 8.33%	Greater than 2%	Greater than 48 inches	1	31	79
1620	8/28/2015	Sandt DOT	Troy	South Main	Perpendicular	Asphalt	Good	Yes	Yes	No	No	No	No	Yes	Yes	NA	Yes	Less than 8.33%	Greater than 2%	Greater than 48 inches	1	31	79
1506	8/13/2015	Sandt DOT	Wilton	Main Street	Parallel	Asphalt	Good	Yes	Yes	No	No	No	No	Yes	Yes	Yes	Yes	Less than 8.33%	Greater than 2%	Greater than 48 inches	1	31	79
387	7/17/2015	Sandt DOT	Pittsfield	Main Street	Perpendicular	Asphalt	Good	Yes	Yes	No	No	No	No	Yes	Yes	NA	Yes	Less than 8.33%	Greater than 2%	Greater than 48 inches	1	31	79
272	7/10/2015	Sandt DOT	Nashua	Dunstable Road	Diagonal	Asphalt	Good	Yes	Yes	No	No	No	No	Yes	Yes	Yes	Yes	Less than 8.33%	Greater than 2%	Greater than 48 inches	1	31	79
1521	8/17/2015	Sandt DOT	Antrim	Main Street	Parallel	Asphalt	Good	Yes	Yes	No	No	No	No	Yes	Yes	NA	Yes	Less than 8.33%	Greater than 2%	Greater than 48 inches	1	31	79
1524	8/17/2015	Sandt DOT	Antrim	Main Street	Parallel	Asphalt	Good	Yes	Yes	No	No	No	No	Yes	Yes	NA	Yes	Less than 8.33%	Greater than 2%	Greater than 48 inches	1	31	79
1525	8/17/2015	Sandt DOT	Antrim	Main Street	Parallel	Asphalt	Good	Yes	Yes	No	No	No	No	Yes	Yes	NA	Yes	Less than 8.33%	Greater than 2%	Greater than 48 inches	1	31	79
1518	8/14/2015	Sandt DOT	Hillsborough	W Main Street	Diagonal	Asphalt	Good	Yes	Yes	No	No	No	No	Yes	Yes	Yes	Yes	Less than 8.33%	Greater than 2%	Greater than 48 inches	1	31	79
1433	8/7/2015	Sandt DOT	Goffstown	Main Street	Combined	Asphalt	Good	Yes	Yes	No	No	No	No	Yes	Yes	NA	Yes	Less than 8.33%	Greater than 2%	Greater than 48 inches	1	31	79
1434	8/7/2015	Sandt DOT	Goffstown	Main Street	Parallel	Asphalt	Good	Yes	Yes	No	No	No	No	Yes	Yes	NA	Yes	Less than 8.33%	Greater than 2%	Greater than 48 inches	1	31	79
105	6/26/2015	Sandt DOT	Manch	Daniel Webster Hwy	Diagonal	Asphalt	Good	Yes	Yes	No	No	No	No	Yes	Yes	Yes	Yes	Less than 8.33%	Greater than 2%	Greater than 48 inches	1	31	79
2902	1/7/2016	Sandt DOT	Tilton	Rt 3	Diagonal	Asphalt	Good	Yes	Yes	No	No	No	No	Yes	Yes	Yes	Yes	Less than 8.33%	Greater than 2%	Greater than 48 inches	1	31	79
2109	10/14/2015	Sandt DOT	Portsmouth	Rt 1	Parallel	Asphalt	Good	Yes	Yes	No	No	No	No	Yes	Yes	NA	Yes	Less than 8.33%	Greater than 2%	Greater than 48 inches	1	31	79
2110	10/14/2015	Sandt DOT	Portsmouth	Rt 1	Parallel	Asphalt	Good	Yes	Yes	No	No	No	No	Yes	Yes	NA	Yes	Less than 8.33%	Greater than 2%	Greater than 48 inches	1	31	79
2111	10/14/2015	Sandt DOT	Portsmouth	Rt 1	Diagonal	Asphalt	Good	Yes	Yes	No	No	No	No	Yes	Yes	Yes	Yes	Less than 8.33%	Greater than 2%	Greater than 48 inches	1	31	79
2112	10/14/2015	Sandt DOT	Portsmouth	Rt 1	Diagonal	Asphalt	Good	Yes	Yes	No	No	No	No	Yes	Yes	Yes	Yes	Less than 8.33%	Greater than 2%	Greater than 48 inches	1	31	79
1581	8/20/2015	Sandt DOT	New Ipswich	Turnpike Road	Perpendicular	Asphalt	Fair	Yes	No	Yes	No	No	No	Yes	Yes	NA	Yes	Less than 8.33%	Less than or equal to 2%	Greater than 48 inches	1	30	80
2919	1/8/2016	Sandt DOT	New London	Newport Road	Parallel	Concrete	Good	Yes	No	Yes	No	No	No	Yes	Yes	NA	Yes	Less than 8.33%	Greater than 2%	Greater than 48 inches	1	30	80
126	6/26/2015	MC SWRPC	North Walpole	Russell Street	Perpendicular	Concrete	Good	No	Yes	Yes	No	No	No	Yes	Yes	NA	Yes	8.33% to 10%	Less than or equal to 2%	36 to 48 inches	1	30	80
134	6/26/2015	MC SWRPC	North Walpole	Church Street	Parallel	Concrete	Good	No	Yes	Yes	No	No	No	Yes	Yes	NA	Yes	8.33% to 10%	Less than or equal to 2%	36 to 48 inches	1	30	80
1599	8/26/2015	Sandt DOT	Concord	South Street	Parallel	Concrete	Good	Yes	Yes	Yes	No	No	No	Yes	No	NA	Yes	Less than 8.33%	Greater than 2%	Greater than 48 inches	1	30	80
1389	7/30/2015	Sandt DOT	Brookline	Main Street	Parallel	Concrete	Good	Yes	Yes	Yes	No	No	No	Yes	No	NA	Yes	Less than 8.33%	Greater than 2%	Greater than 48 inches	1	30	80
1390	7/30/2015	Sandt DOT	Brookline	Main Street	Perpendicular	Concrete	Good	Yes	Yes	Yes	No	No	No	Yes	No	NA	Yes	Less than 8.33%	Greater than 2%	Greater than 48 inches	1	30	80
1391	7/30/2015	Sandt DOT	Brookline	Main Street	Perpendicular	Concrete	Good	Yes	Yes	Yes	No	No	No	Yes	No	NA	Yes	Less than 8.33%	Greater than 2%	Greater than 48 inches	1	30	80
1393	7/30/2015	Sandt DOT	Brookline	Milford Street	Parallel	Concrete	Good	Yes	Yes	Yes	No	No	No	Yes	No	NA	Yes	Less than 8.33%	Greater than 2%	Greater than 48 inches	1	30	80
1394	7/30/2015	Sandt DOT	Brookline	Milford Street	Parallel	Concrete	Good	Yes	Yes	Yes	No	No	No	Yes	No	NA	Yes	Less than 8.33%	Greater than 2%	Greater than 48 inches	1	30	80
1395	7/30/2015	Sandt DOT	Brookline	Milford Street	Parallel	Concrete	Good	Yes	Yes	Yes	No	No	No	Yes	No	NA	Yes	Less than 8.33%	Greater than 2%	Greater than 48 inches	1	30	80
2822	12/18/2015	Sandt DOT	Center Harbor	Plymouth St	Parallel	Concrete	Good	Yes	Yes	Yes	No	No	No	Yes	No	NA	Yes	Less than 8.33%	Greater than 2%	Greater than 48 inches	1	30	80
2280	10/23/2015	Sandt DOT	Newmarket	Main Street	Parallel	Concrete	Good	Yes	Yes	Yes	No	No	No	Yes	Yes	NA	Yes	Greater than 12.5%	Less than or equal to 2%	Greater than 48 inches	1	29	80
2243	10/23/2015	Sandt DOT	Newmarket	Exeter Road	Parallel	Concrete	Good	Yes	Yes	Yes	No	No	No	Yes	Yes	NA	Yes	Greater than 12.5%	Less than or equal to 2%	Greater than 48 inches	1	29	80
2161	10/19/2015	Sandt DOT	Concord	South Street	Parallel	Concrete	Good	Yes	Yes	Yes	No	No	No	Yes	Yes	NA	Yes	Greater than 12.5%	Less than or equal to 2%	Greater than 48 inches	1	29	80
1425	8/7/2015	Sandt DOT	Goffstown	Main Street	Combined	Concrete	Good	Yes	Yes	Yes	No	No	No	Yes	Yes	NA	Yes	Greater than 12.5%	Less than or equal to 2%	Greater than 48 inches	1	29	80
1885	9/29/2015	Sandt DOT	Durham	Main Street	Diagonal	Concrete	Good	Yes	Yes	Yes	No	No	No	Yes	Yes	Yes	Yes	Greater than 12.5%	Less than or equal to 2%	Greater than 48 inches	1	29	80
3014	2/8/2016	Wilkinson District 1	Conway	Rtes. 16 & 302	Parallel	Concrete	Fair	Yes	Yes	Yes	No	No	No	Yes	Yes	NA	Yes	10% to 12.5%	Less than or equal to 2%	Greater than 48 inches	1	29	80
2755	12/14/2015	Patch district 1	Littleton	Rte 302	Parallel	Concrete	Good	Yes	Yes	Yes	No	No	No	Yes	Yes	NA	Yes	Greater than 12.5%	Less than or equal to 2%	Greater than 48 inches	1	29	80
2758	12/14/2015	Patch district 1	Littleton	Rte 302	Perpendicular	Concrete	Poor	Yes	Yes	Yes	No	No	No	Yes	Yes	Yes	Yes	Less than 8.33%	Less than or equal to 2%	Greater than 48 inches	1	29	80
2648	12/3/2015	Sandt DOT	Holderness	Bridge Street	Diagonal	Concrete	Poor	Yes	Yes	Yes	No	No	No	Yes	Yes	NA	Yes	Less than 8.33%	Less than or equal to 2%	Greater than 48 inches	1	29	80
2649	12/3/2015	Sandt DOT	Holderness	Bridge Street	Diagonal	Concrete	Poor	Yes	Yes	Yes	No	No	No	Yes	Yes	NA	Yes	Less than 8.33%	Less than or equal to 2%	Greater than 48 inches	1	29	80
2235	10/22/2015	Sandt DOT	Portsmouth	International Drive	Diagonal	Concrete	Good	Yes	Yes	No	No	No	No	Yes	Yes	Yes	Yes	Less than 8.33%	Less than or equal to 2%	Greater than 48 inches	1	29	80
2236	10/22/2015	Sandt DOT	Portsmouth	International Drive	Diagonal	Concrete	Good	Yes	Yes	No	No	No	No	Yes	Yes	Yes	Yes	Less than 8.33%	Less than or equal to 2%	Greater than 48 inches	1	29	80
2237	10/22/2015	Sandt DOT	Portsmouth	International Drive	Diagonal	Concrete	Good	Yes	Yes	No	No	No	No	Yes	Yes	Yes	Yes	Less than 8.33%	Less than or equal to 2%	Greater than 48 inches	1	29	80
137	6/29/2015	Sandt DOT	Portsmouth	International Drive	Diagonal	Concrete	Good	Yes	Yes	No	No	No	No	Yes	Yes	Yes	Yes	Less than 8.33%	Less than or equal to 2%	Greater than 48 inches	1	29	80
1533	8/17/2015	Sandt DOT	Antrim	Main Street	Perpendicular	Concrete	Good	Yes	Yes	No	No	No	No	Yes	Yes	NA	Yes	Less than 8.33%	Less than or equal to 2%	Greater than 48 inches	1	29	80
1534	8/17/2015	Sandt DOT	Antrim	Main Street	Parallel	Concrete	Good	Yes	Yes	Yes	No	No	No	Yes	Yes	NA	Yes	Less than 8.33%	Less than or equal to 2%	Greater than 48 inches	1	29	80
1442	8/7/2015	Sandt DOT	Goffstown	Main Street	Perpendicular	Concrete	Good	Yes	Yes	Yes	No	No	No	Yes	Yes	Yes	Yes	Less than 8.33%	Less than or equal to 2%	Greater than 48 inches	1	29	80
2221	10/22/2015	Sandt DOT	Portsmouth	Woodbury Ave	Diagonal	Asphalt	Good	Yes	Yes	No	No	No	No	Yes	Yes	Yes	Yes	Less than 8.33%	Less than or equal to 2%	36 to 48 inches	1	29	80
1570	8/19/2015	Sandt DOT	Peterborough	Main	Diagonal	Asphalt	Good	Yes	Yes	No	No	No	No	Yes	Yes	NA	Yes	Less than 8.33%	Less than or equal to 2%	36 to 48 inches	1	29	80
1571	8/19/2015	Sandt DOT	Peterborough	Concord Street	Perpendicular	Asphalt	Good	Yes	Yes	No	No	No	No	Yes	Yes	NA	Yes	Less than 8.33%	Less than or equal to 2%	36 to 48 inches	1	29	80
1572	8/19/2015	Sandt DOT	Peterborough	Concord Street	Perpendicular	Asphalt	Good	Yes	Yes	No	No	No	No	Yes	Yes	NA	Yes	Less than 8.33%	Less than or equal to 2%	36 to 48 inches	1	29	80
1573	8/19/2015	Sandt DOT	Peterborough	Main	Perpendicular	Asphalt	Good	Yes	Yes	No	No	No	No	Yes	Yes	NA	Yes	Less than 8.33%	Less than or equal to 2%	36 to 48 inches	1	29	80
2057	10/8/2015	Sandt DOT	Durham	Dover Road	Parallel	Concrete	Good	Yes	Yes	Yes	No	No	No	Yes	Yes	NA	Yes	Less than 8.33%	Less than or equal to 2%	Greater than 48 inches	1	29	80
1963	10/2/2015	Sandt DOT	Rochester	N Main St	Diagonal	Concrete	Good	Yes	Yes	Yes	No	No	No	Yes	Yes	Yes	Yes	Less than 8.33%	Less than or equal to 2%	Greater than 48 inches	1	29	80
1964	10/2/2015	Sandt DOT	Rochester	N Main St	Diagonal	Concrete	Good	Yes	Yes	Yes	No	No	No	Yes	Yes	Yes	Yes	Less than 8.33%	Less than or equal to 2%	Greater than 48 inches	1	29	80
1910	10/1/2015	Sandt DOT	Rochester	N Main	Diagonal	Concrete	Good	Yes	Yes	Yes	No	No	No	Yes	Yes	Yes	Yes	Less than 8.33%	Less than or equal to 2%	Greater than 48 inches	1	29	80
1920	10/1/2015	Sandt DOT	Rochester	N Main	Diagonal	Concrete	Good	Yes	Yes	Yes	No	No	No	Yes	Yes	Yes	Yes	Less than 8.33%	Less than or equal to 2%	Greater than 48 inches	1	29	80
1921	10/1/2015	Sandt DOT	Rochester	N Main	Perpendicular	Concrete	Good	Yes	Yes	Yes	No	No	No	Yes	Yes	NA	Yes	Less than 8.33%	Less than or equal to 2%	Greater than 48 inches	1	29	80
1922	10/1/2015	Sandt DOT	Rochester	N Main	Perpendicular	Concrete	Good	Yes	Yes	Yes	No	No	No	Yes	Yes	NA	Yes	Less than 8.33%	Less than or equal to 2%	Greater than 48 inches	1	29	80
1923	10/1/2015	Sandt DOT	Rochester	N Main	Parallel	Concrete	Good	Yes	Yes	Yes	No	No	No	Yes	Yes	NA	Yes	Less than 8.33%	Less than or equal to 2%	Greater than 48 inches	1	29	80
1955	10/1/2015	Sandt DOT	Rochester	N Main	Parallel	Concrete	Good	Yes	Yes	Yes	No	No	No	Yes	Yes	NA	Yes	Less than 8.33%	Less than or equal to 2%	Greater than 48 inches	1	29	80
1956	10/1/2015	Sandt DOT	Rochester	N Main	Parallel	Concrete	Good	Yes	Yes	Yes	No	No	No	Yes	Yes	NA	Yes	Less than 8.33%	Less than or equal to 2%	Greater than 48 inches	1	29	80
1957	10/1/2015	Sandt DOT	Rochester	N Main	Parallel	Concrete	Good	Yes	Yes	Yes	No	No	No	Yes	Yes	NA	Yes	Less than 8.33%	Less than or equal to 2%	Greater than 48 inches	1	29	80
327	7/14/2015	Sandt DOT	Hudson	Wason	Perpendicular	Concrete	Good	Yes	Yes	Yes	No	No	No	Yes	Yes	NA	Yes	Less than 8.33%	Less than or equal to 2%	Greater than 48 inches	1	29	80
205	7/7/2015	Sandt DOT	Concord	W Portsmouth Street	Parallel	Concrete	Good	Yes	Yes	Yes	No	No	No	Yes	Yes	NA	Yes	Less than 8.33%	Less than or equal to 2%	Greater than 48 inches	1	29	80
206	7/7/2015	Sandt DOT	Concord	W Portsmouth Street	Parallel	Concrete	Good	Yes	Yes	Yes	No	No	No	Yes	Yes	NA	Yes	Less than 8.33%	Less than or equal to 2%	Greater than 48 inches	1	29	80
207	7/7/2015	Sandt DOT	Concord	W Portsmouth Street	Perpendicular	Concrete	Good	Yes	Yes	Yes	No	No	No	Yes	Yes	NA	Yes	Less than 8.33%	Less than or equal to 2%	Greater than 48 inches	1	29	80
208	7/7/2015	Sandt DOT	Concord	W Portsmouth Street	Perpendicular	Concrete	Good	Yes	Yes	Yes	No	No	No	Yes	Yes	NA	Yes	Less than 8.33%	Less than or equal to 2%	Greater than 48 inches	1	29	80
174	7/2/2015	Sandt DOT	Manchester	Londonderry Tpke	Parallel	Concrete	Good	Yes	Yes	Yes	No	No	No	Yes	Yes	NA	Yes	Less than 8.33%	Less than or equal to 2%	Greater than 48 inches	1	29	80
176	7/2/2015	Sandt DOT	Manchester	Londonderry Tpke	Perpendicular	Concrete	Good	Yes	Yes	Yes	No	No	No	Yes	Yes	NA	Yes	Less than 8.33%	Less than or equal to 2%	Greater than 48 inches	1	29	80
177	7/2/2015	Sandt DOT	Manchester	Londonderry Tpke	Perpendicular	Concrete	Good	Yes	Yes	Yes	No	No	No	Yes	Yes	NA	Yes	Less than 8.33%	Less than or equal to 2%	Greater than 48 inches	1	29	80
2021	10/6/2015	Sandt DOT	Dover	Knox Marsh Road	Perpendicular	Concrete	Good	Yes	Yes	Yes	No	No	No	Yes	Yes	NA	Yes	Less than 8.33%	Less than or equal to 2%	Greater than 48 inches	1	29	80
1906	9/30/2015	Sandt Dot	Conway	Main Street	Perpendicular	Concrete	Good	Yes	Yes	Yes	No	No	No	Yes	Yes	NA	Yes	Less than 8.33%	Less than or equal to 2%	Greater than 48 inches	1	29	80
2246	10/23/2015	Sandt DOT	Newmarket	Exeter Road	Diagonal	Concrete	Good	Yes	Yes	Yes	No	No	No	Yes	Yes	NA	Yes	Less than 8.33%	Less than or equal to 2%	Greater than 48 inches	1	29	80
2247	10/23/2015	Sandt DOT	Newmarket	Exeter Road	Perpendicular	Concrete	Good	Yes	Yes	Yes	No	No	No	Yes	Yes	NA	Yes	Less than 8.33%	Less than or equal to 2%	Greater than 48 inches	1	29	80
2248	10/23/2015	Sandt DOT	Newmarket	Exeter Road	Perpendicular	Concrete	Good	Yes	Yes	Yes	No	No	No	Yes	Yes	NA	Yes	Less than 8.33%	Less than or equal to 2%	Greater than 48 inches	1	29	80
2249	10/23/2015	Sandt DOT	Newmarket	Exeter Road	Diagonal	Concrete	Good	Yes	Yes	Yes	No	No	No	Yes	Yes	NA	Yes	Less than 8.33%	Less than or equal to 2%	Greater than 48 inches	1	29	80
2250	10/23/2015	Sandt DOT	Newmarket	Exeter Road	Diagonal	Concrete	Good	Yes	Yes	Yes	No	No	No	Yes	Yes	NA	Yes	Less than 8.33%	Less than or equal to 2%	Greater than 48 inches	1	29	80
2251	10/23/2015	Sandt DOT	Newmarket	Exeter Road	Parallel	Concrete	Good	Yes	Yes	Yes	No	No	No	Yes	Yes	NA	Yes	Less than 8.33%	Less than or equal to 2%	Greater than 48 inches	1	29	80
2252	10/23/2015	Sandt DOT	Newmarket	Exeter Road	Perpendicular	Concrete	Good	Yes	Yes	Yes	No	No	No	Yes	Yes	NA	Yes	Less than 8.33%	Less than or equal to 2%	Greater than 48 inches	1	29	80
2210	10/22/2015	Sandt DOT	Portsmouth	Woodbury Ave	Parallel	Concrete	Good	Yes	Yes	Yes	No	No	No	Yes	Yes	NA	Yes	Less than 8.33%	Less than or equal to 2%	Greater than 48 inches	1	29	80
2211	10/22/2015	Sandt DOT	Portsmouth	Woodbury Ave	Parallel	Concrete	Good	Yes	Yes	Yes	No	No	No	Yes	Yes	NA	Yes	Less than 8.33%	Less than or equal to 2%	Greater than 48 inches	1	29	80
2212	10/22/2015	Sandt DOT	Portsmouth	Woodbury Ave	Parallel	Concrete	Good	Yes	Yes	Yes	No	No	No	Yes	Yes	NA	Yes	Less than 8.33%	Less than or equal to 2%	Greater than 48 inches	1	29	80
2213	10/22/2015	Sandt DOT	Portsmouth	Woodbury Ave	Parallel	Concrete	Good	Yes	Yes	Yes	No	No	No	Yes	Yes	NA	Yes	Less than 8.33%	Less than or equal to 2%	Greater than 48 inches	1	29	80
2217	10/22/2015	Sandt DOT	Portsmouth	Woodbury Ave	Diagonal	Concrete	Good	Yes	Yes	Yes	No	No	No	Yes	Yes	Yes	Yes	Less than 8.33%	Less than or equal to 2%	Greater than 48 inches	1	29	80
2156	10/16/2015	Sandt DOT	Concord	Constitution Avenue	Perpendicular	Concrete	Good	Yes	Yes	Yes	No	No	No	Yes	Yes	NA	Yes	Less than 8.33%	Less than or equal to 2%	Greater than 48 inches	1	29	80
2128	10/15/2015	Sandt DOT	Stratham	Rt 108	Diagonal	Concrete	Good	Yes	Yes	Yes	No	No	No	Yes	Yes	Yes	Yes	Less than 8.33%	Less than or equal to 2%	Greater than 48 inches	1	29	80
2129	10/15/2015	Sandt DOT	Stratham	Rt 108	Diagonal	Concrete	Good	Yes	Yes	Yes	No	No	No	Yes	Yes	Yes	Yes	Less than 8.33%	Less than or equal to 2%	Greater than 48 inches	1	29	80

2130	10/15/2015	Sandt DOT	Stratham	Rt 108	Perpendicular	Concrete	Good	Yes	Yes	No	No	No	No	Yes	Yes	NA	Yes	Less than 8.33%	Less than or equal to 2%	Greater than 48 inches	1	29	80
2131	10/15/2015	Sandt DOT	Stratham	Rt 108	Perpendicular	Concrete	Good	Yes	Yes	No	No	No	No	Yes	Yes	NA	Yes	Less than 8.33%	Less than or equal to 2%	Greater than 48 inches	1	29	80
2132	10/15/2015	Sandt DOT	Stratham	Rt 108	Perpendicular	Concrete	Good	Yes	Yes	No	No	No	No	Yes	Yes	NA	Yes	Less than 8.33%	Less than or equal to 2%	Greater than 48 inches	1	29	80
2133	10/15/2015	Sandt DOT	Stratham	Rt 108	Perpendicular	Concrete	Good	Yes	Yes	No	No	No	No	Yes	Yes	NA	Yes	Less than 8.33%	Less than or equal to 2%	Greater than 48 inches	1	29	80
2134	10/15/2015	Sandt DOT	Stratham	Rt 108	Perpendicular	Concrete	Good	Yes	Yes	No	No	No	No	Yes	Yes	NA	Yes	Less than 8.33%	Less than or equal to 2%	Greater than 48 inches	1	29	80
2135	10/15/2015	Sandt DOT	Stratham	Rt 108	Perpendicular	Concrete	Good	Yes	Yes	No	No	No	No	Yes	Yes	NA	Yes	Less than 8.33%	Less than or equal to 2%	Greater than 48 inches	1	29	80
2136	10/15/2015	Sandt DOT	Stratham	Rt 108	Perpendicular	Concrete	Good	Yes	Yes	No	No	No	No	Yes	Yes	NA	Yes	Less than 8.33%	Less than or equal to 2%	Greater than 48 inches	1	29	80
2137	10/15/2015	Sandt DOT	Stratham	Rt 108	Perpendicular	Concrete	Good	Yes	Yes	No	No	No	No	Yes	Yes	NA	Yes	Less than 8.33%	Less than or equal to 2%	Greater than 48 inches	1	29	80
2138	10/15/2015	Sandt DOT	Stratham	Rt 108	Diagonal	Concrete	Good	Yes	Yes	No	No	No	No	Yes	Yes	Yes	Yes	Less than 8.33%	Less than or equal to 2%	Greater than 48 inches	1	29	80
2139	10/15/2015	Sandt DOT	Stratham	Rt 108	Diagonal	Concrete	Good	Yes	Yes	No	No	No	No	Yes	Yes	Yes	Yes	Less than 8.33%	Less than or equal to 2%	Greater than 48 inches	1	29	80
2140	10/15/2015	Sandt DOT	Stratham	Rt 108	Diagonal	Concrete	Good	Yes	Yes	No	No	No	No	Yes	Yes	Yes	Yes	Less than 8.33%	Less than or equal to 2%	Greater than 48 inches	1	29	80
2141	10/15/2015	Sandt DOT	Stratham	Rt 108	Diagonal	Concrete	Good	Yes	Yes	No	No	No	No	Yes	Yes	Yes	Yes	Less than 8.33%	Less than or equal to 2%	Greater than 48 inches	1	29	80
2142	10/15/2015	Sandt DOT	Stratham	Rt 108	Parallel	Concrete	Good	Yes	Yes	No	No	No	No	Yes	Yes	NA	Yes	Less than 8.33%	Less than or equal to 2%	Greater than 48 inches	1	29	80
2143	10/15/2015	Sandt DOT	Stratham	Rt 108	Parallel	Concrete	Good	Yes	Yes	No	No	No	No	Yes	Yes	NA	Yes	Less than 8.33%	Less than or equal to 2%	Greater than 48 inches	1	29	80
2144	10/15/2015	Sandt DOT	Stratham	Rt 108	Perpendicular	Concrete	Good	Yes	Yes	No	No	No	No	Yes	Yes	NA	Yes	Less than 8.33%	Less than or equal to 2%	Greater than 48 inches	1	29	80
2145	10/15/2015	Sandt DOT	Stratham	Rt 108	Perpendicular	Concrete	Good	Yes	Yes	No	No	No	No	Yes	Yes	NA	Yes	Less than 8.33%	Less than or equal to 2%	Greater than 48 inches	1	29	80
2146	10/15/2015	Sandt DOT	Stratham	Rt 108	Perpendicular	Concrete	Good	Yes	Yes	No	No	No	No	Yes	Yes	NA	Yes	Less than 8.33%	Less than or equal to 2%	Greater than 48 inches	1	29	80
2147	10/15/2015	Sandt DOT	Stratham	Rt 108	Perpendicular	Concrete	Good	Yes	Yes	No	No	No	No	Yes	Yes	NA	Yes	Less than 8.33%	Less than or equal to 2%	Greater than 48 inches	1	29	80
2148	10/15/2015	Sandt DOT	Stratham	Rt 108	Perpendicular	Concrete	Good	Yes	Yes	No	No	No	No	Yes	Yes	NA	Yes	Less than 8.33%	Less than or equal to 2%	Greater than 48 inches	1	29	80
2149	10/15/2015	Sandt DOT	Stratham	Rt 108	Perpendicular	Concrete	Good	Yes	Yes	No	No	No	No	Yes	Yes	NA	Yes	Less than 8.33%	Less than or equal to 2%	Greater than 48 inches	1	29	80
2150	10/15/2015	Sandt DOT	Stratham	Rt 108	Perpendicular	Concrete	Good	Yes	Yes	No	No	No	No	Yes	Yes	NA	Yes	Less than 8.33%	Less than or equal to 2%	Greater than 48 inches	1	29	80
2151	10/15/2015	Sandt DOT	Stratham	Rt 108	Perpendicular	Concrete	Good	Yes	Yes	No	No	No	No	Yes	Yes	NA	Yes	Less than 8.33%	Less than or equal to 2%	Greater than 48 inches	1	29	80
2152	10/15/2015	Sandt DOT	Stratham	Rt 108	Perpendicular	Concrete	Good	Yes	Yes	No	No	No	No	Yes	Yes	NA	Yes	Less than 8.33%	Less than or equal to 2%	Greater than 48 inches	1	29	80
2065	10/8/2015	Sandt DOT	Durham	Main Street	Perpendicular	Concrete	Good	Yes	Yes	No	No	No	No	Yes	Yes	NA	Yes	Less than 8.33%	Less than or equal to 2%	Greater than 48 inches	1	29	80
1668	9/2/2015	Sandt DOT	Winchester	Rt 10	Perpendicular	Concrete	Good	Yes	Yes	No	No	No	No	Yes	Yes	NA	Yes	Less than 8.33%	Less than or equal to 2%	Greater than 48 inches	1	29	80
1564	8/19/2015	Sandt DOT	Peterborough	Main	Diagonal	Concrete	Good	Yes	Yes	No	No	No	No	Yes	Yes	NA	Yes	Less than 8.33%	Less than or equal to 2%	Greater than 48 inches	1	29	80
1439	8/7/2015	Sandt DOT	Goffstown	Main Street	Diagonal	Concrete	Good	Yes	Yes	No	No	No	No	Yes	Yes	Yes	Yes	Less than 8.33%	Less than or equal to 2%	Greater than 48 inches	1	29	80
1440	8/7/2015	Sandt DOT	Goffstown	Main Street	Combined	Concrete	Good	Yes	Yes	No	No	No	No	Yes	Yes	Yes	Yes	Less than 8.33%	Less than or equal to 2%	Greater than 48 inches	1	29	80
1441	8/7/2015	Sandt DOT	Goffstown	Main Street	Diagonal	Concrete	Good	Yes	Yes	No	No	No	No	Yes	Yes	Yes	Yes	Less than 8.33%	Less than or equal to 2%	Greater than 48 inches	1	29	80
17	6/12/2015	Sandt DOT	Concord	Noble Drive	Perpendicular	Concrete	Good	Yes	Yes	No	No	No	No	Yes	Yes	NA	Yes	Less than 8.33%	Less than or equal to 2%	Greater than 48 inches	1	29	80
18	6/12/2015	Sandt DOT	Concord	Noble Drive	Perpendicular	Concrete	Good	Yes	Yes	No	No	No	No	Yes	Yes	NA	Yes	Less than 8.33%	Less than or equal to 2%	Greater than 48 inches	1	29	80
19	6/12/2015	Sandt DOT	Concord	Noble Drive	Parallel	Concrete	Good	Yes	Yes	No	No	No	No	Yes	Yes	NA	Yes	Less than 8.33%	Less than or equal to 2%	Greater than 48 inches	1	29	80
2180	10/20/2015	Sandt DOT	Exeter	Portsmouth Ave	Perpendicular	Concrete	Good	Yes	Yes	No	No	No	No	Yes	Yes	NA	Yes	Less than 8.33%	Less than or equal to 2%	Greater than 48 inches	1	29	80
2181	10/20/2015	Sandt DOT	Exeter	Portsmouth Ave	Perpendicular	Concrete	Good	Yes	Yes	No	No	No	No	Yes	Yes	NA	Yes	Less than 8.33%	Less than or equal to 2%	Greater than 48 inches	1	29	80
20	6/12/2015	Sandt DOT	Concord	Noble Drive	Perpendicular	Concrete	Good	Yes	Yes	No	No	No	No	Yes	Yes	NA	Yes	Less than 8.33%	Less than or equal to 2%	Greater than 48 inches	1	29	80
2059	10/8/2015	Sandt DOT	Durham	Main Street	Diagonal	Concrete	Good	Yes	Yes	No	No	No	No	Yes	Yes	Yes	Yes	Less than 8.33%	Less than or equal to 2%	Greater than 48 inches	1	29	80
1850	9/25/2015	Sandt DOT	Brentwood	North Road	Perpendicular	Concrete	Good	Yes	Yes	No	No	No	No	Yes	Yes	NA	Yes	Less than 8.33%	Less than or equal to 2%	Greater than 48 inches	1	29	80
2334	10/29/2015	Sandt DOT	Hampton	Ocean Blvd	Perpendicular	Concrete	Good	Yes	Yes	No	No	No	No	Yes	Yes	NA	Yes	Less than 8.33%	Less than or equal to 2%	Greater than 48 inches	1	29	80
2335	10/29/2015	Sandt DOT	Hampton	Ocean Blvd	Perpendicular	Concrete	Good	Yes	Yes	No	No	No	No	Yes	Yes	NA	Yes	Less than 8.33%	Less than or equal to 2%	Greater than 48 inches	1	29	80
2337	10/29/2015	Sandt DOT	Hampton	Ocean Blvd	Perpendicular	Concrete	Good	Yes	Yes	No	No	No	No	Yes	Yes	NA	Yes	Less than 8.33%	Less than or equal to 2%	Greater than 48 inches	1	29	80
2437	10/29/2015	Sandt DOT	Hampton	Ocean Blvd	Perpendicular	Concrete	Good	Yes	Yes	No	No	No	No	Yes	Yes	NA	Yes	Less than 8.33%	Less than or equal to 2%	Greater than 48 inches	1	29	80
2438	10/29/2015	Sandt DOT	Hampton	Ocean Blvd	Perpendicular	Concrete	Good	Yes	Yes	No	No	No	No	Yes	Yes	NA	Yes	Less than 8.33%	Less than or equal to 2%	Greater than 48 inches	1	29	80
2440	10/29/2015	Sandt DOT	Hampton	Ocean Blvd	Perpendicular	Concrete	Good	Yes	Yes	No	No	No	No	Yes	Yes	NA	Yes	Less than 8.33%	Less than or equal to 2%	Greater than 48 inches	1	29	80
2258	10/23/2015	Sandt DOT	Newmarket	Main	Parallel	Concrete	Good	Yes	Yes	No	No	No	No	Yes	Yes	NA	Yes	Less than 8.33%	Less than or equal to 2%	Greater than 48 inches	1	29	80
2270	10/23/2015	Sandt DOT	Newmarket	Main	Parallel	Concrete	Good	Yes	Yes	No	No	No	No	Yes	Yes	NA	Yes	Less than 8.33%	Less than or equal to 2%	Greater than 48 inches	1	29	80
2271	10/23/2015	Sandt DOT	Newmarket	Main	Diagonal	Concrete	Good	Yes	Yes	No	No	No	No	Yes	Yes	NA	Yes	Less than 8.33%	Less than or equal to 2%	Greater than 48 inches	1	29	80
2229	10/22/2015	Sandt DOT	Newington	Pease Blvd	Diagonal	Concrete	Good	Yes	Yes	No	No	No	No	Yes	Yes	Yes	Yes	Less than 8.33%	Less than or equal to 2%	Greater than 48 inches	1	29	80
1887	9/29/2015	Sandt DOT	Durham	Main Street	Perpendicular	Concrete	Good	Yes	Yes	No	No	No	No	Yes	Yes	NA	Yes	Less than 8.33%	Less than or equal to 2%	Greater than 48 inches	1	29	80
2341	10/29/2015	Sandt DOT	Hampton	Ocean Blvd	Parallel	Concrete	Good	Yes	Yes	No	No	No	No	Yes	Yes	NA	Yes	Less than 8.33%	Less than or equal to 2%	Greater than 48 inches	1	29	80
2444	10/29/2015	Sandt DOT	Hampton	Ocean Blvd	Parallel	Concrete	Good	Yes	Yes	No	No	No	No	Yes	Yes	NA	Yes	Less than 8.33%	Less than or equal to 2%	Greater than 48 inches	1	29	80
2066	10/8/2015	Sandt DOT	Durham	Main Street	Diagonal	Concrete	Good	Yes	Yes	No	No	No	No	Yes	Yes	Yes	Yes	Less than 8.33%	Less than or equal to 2%	Greater than 48 inches	1	29	80
2067	10/8/2015	Sandt DOT	Durham	Main Street	Perpendicular	Concrete	Good	Yes	Yes	No	No	No	No	Yes	Yes	NA	Yes	Less than 8.33%	Less than or equal to 2%	Greater than 48 inches	1	29	80
2068	10/8/2015	Sandt DOT	Durham	Main Street	Perpendicular	Concrete	Good	Yes	Yes	No	No	No	No	Yes	Yes	NA	Yes	Less than 8.33%	Less than or equal to 2%	Greater than 48 inches	1	29	80
4053	2/29/2016	Sandt DOT	Seabrook	Rt 1	Diagonal	Concrete	Good	Yes	Yes	No	No	No	No	Yes	Yes	Yes	Yes	Less than 8.33%	Less than or equal to 2%	Greater than 48 inches	1	29	80
4054	2/29/2016	Sandt DOT	Seabrook	Rt 1	Diagonal	Concrete	Good	Yes	Yes	No	No	No	No	Yes	Yes	Yes	Yes	Less than 8.33%	Less than or equal to 2%	Greater than 48 inches	1	29	80
4055	2/29/2016	Sandt DOT	Seabrook	Rt 1	Diagonal	Concrete	Good	Yes	Yes	No	No	No	No	Yes	Yes	Yes	Yes	Less than 8.33%	Less than or equal to 2%	Greater than 48 inches	1	29	80
2993	1/29/2016	Sandt DOT	Concord	Stickney Ave	Perpendicular	Concrete	Good	Yes	Yes	No	No	No	No	Yes	Yes	NA	Yes	Less than 8.33%	Less than or equal to 2%	Greater than 48 inches	1	29	80
2976	1/26/2016	Wilkinson District 1	Conway	Rte. 16 and 302	Parallel	Concrete	Good	Yes	Yes	No	No	No	No	Yes	Yes	NA	Yes	Less than 8.33%	Less than or equal to 2%	Greater than 48 inches	1	29	80
2977	1/26/2016	Wilkinson District 1	Conway	Rte. 16 and 302	Parallel	Concrete	Good	Yes	Yes	No	No	No	No	Yes	Yes	Yes	Yes	Less than 8.33%	Less than or equal to 2%	Greater than 48 inches	1	29	80
2614	12/1/2015	Sandt DOT	Concord	Rt 3	Perpendicular	Concrete	Good	Yes	Yes	No	No	No	No	Yes	Yes	NA	Yes	Less than 8.33%	Less than or equal to 2%	Greater than 48 inches	1	29	80
2615	12/1/2015	Sandt DOT	Concord	Rt 3	Perpendicular	Concrete	Good	Yes	Yes	No	No	No	No	Yes	Yes	NA	Yes	Less than 8.33%	Less than or equal to 2%	Greater than 48 inches	1	29	80
2616	12/1/2015	Sandt DOT	Concord	Rt 3	Perpendicular	Concrete	Good	Yes	Yes	No	No	No	No	Yes	Yes	NA	Yes	Less than 8.33%	Less than or equal to 2%	Greater than 48 inches	1	29	80
2617	12/1/2015	Sandt DOT	Concord	Rt 3	Perpendicular	Concrete	Good	Yes	Yes	No	No	No	No	Yes	Yes	NA	Yes	Less than 8.33%	Less than or equal to 2%	Greater than 48 inches	1	29	80
2618	12/1/2015	Sandt DOT	Concord	Rt 3	Perpendicular	Concrete	Good	Yes	Yes	No	No	No	No	Yes	Yes	NA	Yes	Less than 8.33%	Less than or equal to 2%	Greater than 48 inches	1	29	80
2619	12/1/2015	Sandt DOT	Concord	Rt 3	Perpendicular	Concrete	Good	Yes	Yes	No	No	No	No	Yes	Yes	NA	Yes	Less than 8.33%	Less than or equal to 2%	Greater than 48 inches	1	29	80
2620	12/1/2015	Sandt DOT	Concord	Rt 3	Perpendicular	Concrete	Good	Yes	Yes	No	No	No	No	Yes	Yes	NA	Yes	Less than 8.33%	Less than or equal to 2%	Greater than 48 inches	1	29	80
2621	12/1/2015	Sandt DOT	Concord	Rt 3	Perpendicular	Concrete	Good	Yes	Yes	No	No	No	No	Yes	Yes	NA	Yes	Less than 8.33%	Less than or equal to 2%	Greater than 48 inches	1	29	80
2622	12/1/2015	Sandt DOT	Concord	Rt 3	Diagonal	Concrete	Good	Yes	Yes	No	No	No	No	Yes	Yes	Yes	Yes	Less than 8.33%	Less than or equal to 2%	Greater than 48 inches	1	29	80
2623	12/1/2015	Sandt DOT	Concord	Rt 3	Diagonal	Concrete	Good	Yes	Yes	No	No	No	No	Yes	Yes	Yes	Yes	Less than 8.33%	Less than or equal to 2%	Greater than 48 inches	1	29	80
2624	12/1/2015	Sandt DOT	Concord	Rt 3	Diagonal	Concrete	Good	Yes	Yes	No	No	No	No	Yes	Yes	Yes	Yes	Less than 8.33%	Less than or equal to 2%	Greater than 48 inches	1	29	80
2625	12/1/2015	Sandt DOT	Concord	Rt 3	Diagonal	Concrete	Good	Yes	Yes	No	No	No	No	Yes	Yes	Yes	Yes	Less than 8.33%	Less than or equal to 2%	Greater than 48 inches	1	29	80
2626	12/1/2015	Sandt DOT	Concord	Rt 3	Diagonal	Concrete	Good	Yes	Yes	No	No	No	No	Yes	Yes	Yes	Yes	Less than 8.33%	Less than or equal to 2%	Greater than 48 inches	1	29	80
2627	12/1/2015	Sandt DOT	Concord	Rt 3	Diagonal	Concrete	Good	Yes	Yes	No	No	No	No	Yes	Yes	Yes	Yes	Less than 8.33%	Less than or equal to 2%	Greater than 48 inches	1	29	80
2628	12/1/2015	Sandt DOT	Concord	Rt 3	Diagonal	Concrete	Good	Yes	Yes	No	No	No	No	Yes	Yes	Yes	Yes	Less than 8.33%	Less than or equal to 2%	Greater than 48 inches	1	29	80
2629	12/1/2015	Sandt DOT	Concord	Rt 3	Diagonal	Concrete	Good	Yes	Yes	No	No	No	No	Yes	Yes	Yes	Yes	Less than 8.33%	Less than or equal to 2%	Greater than 48 inches	1	29	80
2630	12/1/2015	Sandt DOT	Concord	Rt 3	Diagonal	Concrete	Good	Yes	Yes	No	No	No	No	Yes	Yes	Yes	Yes	Less than 8.33%	Less than or equal to 2%	Greater than 48 inches	1	29	80
2535	11/23/2015	Sandt DOT	Wolfeboro	Rt 109	Parallel	Concrete	Good	Yes	Yes	No	No	No	No	Yes	Yes	NA	Yes	Less than 8.33%	Less than or equal to 2%	Greater than 48 inches	1	29	80
2536	11/23/2015	Sandt DOT	Wolfeboro	Rt 109	Parallel	Concrete	Good	Yes	Yes	No	No	No	No	Yes	Yes	NA	Yes	Less than 8.33%	Less than or equal to 2%	Greater than 48 inches	1	29	80
2537	11/23/2015	Sandt DOT	Wolfeboro	Rt 109	Parallel	Concrete	Good	Yes	Yes	No	No	No	No	Yes	Yes	NA	Yes	Less than 8.33%	Less than or equal to 2%	Greater than 48 inches	1	29	80
2531	11/20/2015	Sandt DOT	Wolfeboro	Rt 109	Parallel	Concrete	Good	Yes	Yes	No	No	No	No	Yes	Yes	NA	Yes	Less than 8.33%	Less than or equal to 2%	Greater than 48 inches	1	29	80
2532	11/20/2015	Sandt DOT	Wolfeboro	Rt 109	Parallel	Concrete	Good	Yes	Yes	No	No	No	No	Yes	Yes	NA	Yes	Less than 8.33%	Less than or equal to 2%	Greater than 48 inches	1	29	80
2465	11/2/2015	Sandt DOT	Hampton	Ocean Blvd	Perpendicular	Concrete	Good	Yes	Yes	No	No	No	No	Yes	Yes	NA	Yes	Less than 8.33%	Less than or equal to 2%	Greater than 48 inches	1	29	80
1669	9/2/2015	Sandt DOT	Winchester	Rt 10	Diagonal	Concrete	Good	Yes	Yes	No	No	No	No	Yes	Yes	Yes	Yes	Less than 8.33%	Less than or equal to 2%	Greater than 48 inches	1	29	80
1574	8/20/2015	Sandt DOT	Peterborough	Grove Street	Combined	Concrete	Good	Yes	Yes	No	No	No	No	Yes	Yes	NA	Yes	Less than 8.33%	Less than or equal to 2%	Greater than 48 inches	1	29	80
1575	8/20/2015	Sandt DOT	Peterborough	Grove Street	Combined	Concrete	Good	Yes	Yes	No	No	No	No	Yes	Yes	NA	Yes	Less than 8.33%	Less than or equal to 2%	Greater than 48 inches	1	29	80
128	6/26/2015	MC SWRPC	North Walpole	Russell Street	Perpendicular	Concrete	Good	Yes	Yes	Yes	No	No	No	No	Yes	NA	Yes	Less than 8.33%	Less than or equal to 2%	36 to 48 inches	1	28	81
91	6/23/2015	Sandt DOT	Hooksett	Hooksett Road	Diagonal	Concrete	Good	Yes	Yes	Yes	No	No	Yes	Yes	Yes	Yes	Yes	Less than 8.33%	Less than or equal to 2%	36 to 48 inches	1	28	81
93	6/23/2015	Sandt DOT	Hooksett	Hooksett Road	Diagonal	Concrete	Good	Yes	Yes	Yes	No	No	Yes	Yes	Yes	Yes	Yes	Less than 8.33%	Less than or equal to 2%	36 to 48 inches	1	28	81
2799	12/16/2015	Nichols district 1	Littleton	Rte 302	Parallel	Concrete	Good	Yes	No	Yes	No	Yes	No	Yes	NA	NA	Yes	Less than 8.33%	Less than or equal to 2%	Greater than 48 inches	1	27	82
2599	11/30/2015	Sandt DOT	Concord	Rt 13	Perpendicular	Concrete	Good	Yes	No	Yes	No	Yes	No	Yes	Yes	NA	Yes	Less than 8.33%	Less than or equal to 2%	Greater than 48 inches	1	27	82
2600	11/30/2015	Sandt DOT	Concord	Rt 13	Perpendicular	Concrete	Good	Yes	No	Yes	No	Yes	No	Yes	Yes	NA	Yes	Less than 8.33%	Less than or equal to 2%	Greater than 48 inches	1	27	82
2605	11/30/2015	Sandt DOT	Concord	Rt 13	Diagonal	Concrete	Good	Yes	No	Yes	No	Yes	No	Yes	Yes	Yes	Yes	Less than 8.33%	Less than or equal to 2%	Greater than 48 inches	1	27	82
2606	11/30/2015	Sandt DOT	Concord	Rt 13	Diagonal	Concrete	Good	Yes	No	Yes	No	Yes	No	Yes	Yes	Yes	Yes	Less than 8.33%	Less than or equal to 2%	Greater than 48 inches	1	27	82
1	10/24/2014	Unh t2	Durham	McDaniel dr	Other	Concrete	Good	Yes	Yes	Yes	No	Yes	No	Yes	No	NA	Yes	Less than 8.33%	Less than or equal to 2%	Greater than 48 inches	1	27	82
2	10/24/2014	Unh t2	Durham	McDaniel dr	Parallel	Concrete	Good	Yes	Yes	Yes	No	Yes	No	Yes	No	NA	Yes	Less than 8.33%	Less than or equal to 2%	Greater than 48 inches	1	27	82
3	10/24/2014	Unh t2	Durham	McDaniel fr	Parallel	Concrete	Good	Yes	Yes	Yes	No	Yes	No	Yes	No	NA	Yes	Less than 8.33%	Less than or equal to 2%	Greater than 48 inches	1	27	82
133	6/26/2015	MC SWRPC	North Walpole	Duffy Street	Perpendicular	Concrete	Good	No	Yes	Yes	No	No	No	Yes	Yes	NA	Yes	Less than 8.33%	Greater than 2%	36 to 48 inches	1	26	82
131	6/26/2015	MC SWRPC	North Walpole	Brady Street	Perpendicular	Concrete	Good	No	No	Yes	Yes	No	No	Yes	Yes	NA	Yes	Less than 8.33%	Greater than 2%	36 to 48 inches	1	26	82
124	6/26/2015	MC SWRPC	North Walpole	Maple Street	Perpendicular	Concrete	Good	No	Yes	Yes	No	No	No	Yes	Yes	NA	Yes	Less than 8.33%	Greater than 2%	36 to 48 inches	1	26	82
69	6/17/2015	Sandt DOT	Allenstown	Main	Parallel	Asphalt	Good	Yes	Yes	Yes	No	No	No	No	Yes	NA	Yes	Less than 8.33%	Greater than 2%	Greater than 48 inches	1	26	82
60	6/17/2015	Sandt DOT	Suncook	Main	Diagonal	Asphalt	Good	Yes	Yes	Yes	No	No	Yes	Yes	Yes	Yes	Yes	Less than 8.33%	Greater than 2%	Greater than 48 inches	1	26	82
136	6/26/2015	MC SWRPC	North Walpole	Center Street	Perpendicular	Concrete	Good	No	Yes	Yes	No	No	No	Yes	Yes	NA	Yes	8.33% to 10%	Less than or equal to 2%	Greater than 48 inches	1	26	82
2973	1/26/2016	Wilkinson District 1	Conway	Rte. 16 and 302	Parallel	Concrete	Good	No	Yes	Yes	No	No	No	Yes	Yes	NA	Yes	8.33% to 10%	Less than or equal to 2%	Greater than 48 inches	1	26	82
2911	1/7/2016	Wilkinson District 1	Woodstock	Rte. 112	Parallel	Concrete	Good	No	Yes	Yes	No	No	No	Yes	NA	NA	Yes	8.33% to 10%	Less than or equal to 2%	Greater than 48 inches	1	26	82
2471	11/2/2015	Sandt DOT	Seabrook	Ocean Blvd	Perpendicular	Concrete	Good	No	Yes	Yes	No	No	No	Yes	NA	NA	Yes	8.33% to 10%	Less than or equal to 2%	Greater than 48 inches	1	26	82
2472	11/2/2015	Sandt DOT	Seabrook	Ocean Blvd	Perpendicular	Concrete	Good	No	Yes	Yes	No	No	No	Yes	NA	NA	Yes	8.33% to 10%	Less than or equal to 2%	Greater than 48 inches	1	26	82
2267	10/23/2015	Sandt DOT	Newmarket	Main	Parallel	Concrete	Good	Yes	Yes	Yes	No	No	No	Yes	Yes	NA	Yes	10% to 12.5%	Greater than 2%	Greater than 48 inches	1	25	83
189	7/6/2015	Sandt DOT	Manchester	S Willow Street	Perpendicular	Concrete	Good	Yes	Yes	Yes	No	No	No	Yes	Yes	NA	Yes	10% to 12.5%	Greater than 2%	Greater than 48 inches	1	25	83
193	7/6/2015	Sandt DOT	Manchester	S Willow Street	Perpendicular	Concrete	Good	Yes	Yes	Yes	No	No	No	Yes	Yes	NA	Yes	10% to 12.5%	Greater than 2%	Greater than 48 inches	1	25	83
2013	10/5/2015	Sandt DOT	Rollinsford	Front	Parallel	Concrete	Good	Yes	Yes	Yes	No	No	No	Yes	Yes	NA	Yes	10% to 12.5%	Greater than 2%	Greater than 48 inches	1	25	83
2968	1/25/2016	Wilkinson District 1	Conway	Rte. 302	Parallel	Concrete	Good	Yes	Yes	Yes	No	No	No	Yes	Yes	NA	Yes	10% to 12.5%	Greater than 2%	Greater than 48 inches	1	25	83
2960	1/13/2016	Nichols district 1	Woodsville	Rte 302	Perpendicular	Concrete	Good	Yes	Yes	Yes	No	No	No	Yes	NA	NA	Yes	10% to 12.5%	Greater than 2%	Greater than 48 inches	1	25	83
2780	12/16/2015	Nichols district 1	Littleton	Rte 302	Parallel	Concrete	Good	Yes	Yes	Yes	No	No	No	Yes	NA	NA	Yes	10% to 12.5%	Greater than 2%	Greater than 48 inches	1	25	83

2782	12/16/2015	Nichols district 1	Littleton	Rte 302	Parallel	Concrete	Good	Yes	Yes	Yes	No	No	No	Yes	NA	NA	Yes	10% to 12.5%	Greater than 2%	Greater than 48 inches	1	25	83
2560	11/25/2015	Sandt DOT	Alton	Rt 11	Perpendicular	Concrete	Good	Yes	Yes	Yes	No	No	No	Yes	Yes	NA	Yes	10% to 12.5%	Greater than 2%	Greater than 48 inches	1	25	83
2556	11/25/2015	Nichols district 1	Gorham	Rte 16	Parallel	Concrete	Good	Yes	Yes	Yes	No	No	No	Yes	Yes	No	Yes	Less than 8.33%	Greater than 2%	Greater than 48 inches	1	25	83
383	7/17/2015	Sandt DOT	Pittsfield	Main Street	Parallel	Asphalt	Good	Yes	Yes	No	No	No	No	Yes	Yes	NA	Yes	Less than 8.33%	Less than or equal to 2%	Greater than 48 inches	1	25	83
389	7/17/2015	Sandt DOT	Pittsfield	Main Street	Parallel	Asphalt	Good	Yes	Yes	No	No	No	No	Yes	Yes	NA	Yes	Less than 8.33%	Less than or equal to 2%	Greater than 48 inches	1	25	83
2298	10/27/2015	Sandt DOT	Hampton	Ocean Blvd	Perpendicular	Asphalt	Good	Yes	Yes	No	No	No	No	Yes	Yes	NA	Yes	Less than 8.33%	Less than or equal to 2%	Greater than 48 inches	1	25	83
2303	10/27/2015	Sandt DOT	Hampton	Ocean Blvd	Perpendicular	Asphalt	Good	Yes	Yes	No	No	No	No	Yes	Yes	NA	Yes	Less than 8.33%	Less than or equal to 2%	Greater than 48 inches	1	25	83
2304	10/27/2015	Sandt DOT	Hampton	Ocean Blvd	Perpendicular	Asphalt	Good	Yes	Yes	No	No	No	No	Yes	Yes	NA	Yes	Less than 8.33%	Less than or equal to 2%	Greater than 48 inches	1	25	83
2305	10/27/2015	Sandt DOT	Hampton	Ocean Blvd	Perpendicular	Asphalt	Good	Yes	Yes	No	No	No	No	Yes	Yes	NA	Yes	Less than 8.33%	Less than or equal to 2%	Greater than 48 inches	1	25	83
2306	10/27/2015	Sandt DOT	Hampton	Ocean Blvd	Perpendicular	Asphalt	Good	Yes	Yes	No	No	No	No	Yes	Yes	NA	Yes	Less than 8.33%	Less than or equal to 2%	Greater than 48 inches	1	25	83
2307	10/27/2015	Sandt DOT	Hampton	Ocean Blvd	Perpendicular	Asphalt	Good	Yes	Yes	No	No	No	No	Yes	Yes	NA	Yes	Less than 8.33%	Less than or equal to 2%	Greater than 48 inches	1	25	83
2308	10/27/2015	Sandt DOT	Hampton	Ocean Blvd	Perpendicular	Asphalt	Good	Yes	Yes	No	No	No	No	Yes	Yes	NA	Yes	Less than 8.33%	Less than or equal to 2%	Greater than 48 inches	1	25	83
2309	10/27/2015	Sandt DOT	Hampton	Ocean Blvd	Perpendicular	Asphalt	Good	Yes	Yes	No	No	No	No	Yes	Yes	NA	Yes	Less than 8.33%	Less than or equal to 2%	Greater than 48 inches	1	25	83
152	6/30/2015	Sandt DOT	Manchester	2nd Street	Combined	Asphalt	Good	Yes	Yes	No	No	No	No	Yes	Yes	NA	Yes	Less than 8.33%	Less than or equal to 2%	Greater than 48 inches	1	25	83
1469	8/12/2015	Sandt DOT	Nashua	Amherst Street	Diagonal	Asphalt	Good	Yes	Yes	No	No	No	No	Yes	Yes	Yes	Yes	Less than 8.33%	Less than or equal to 2%	Greater than 48 inches	1	25	83
1470	8/12/2015	Sandt DOT	Nashua	Amherst Street	Diagonal	Asphalt	Good	Yes	Yes	No	No	No	No	Yes	Yes	Yes	Yes	Less than 8.33%	Less than or equal to 2%	Greater than 48 inches	1	25	83
1473	8/12/2015	Sandt DOT	Nashua	Amherst Street	Diagonal	Asphalt	Good	Yes	Yes	No	No	No	No	Yes	Yes	Yes	Yes	Less than 8.33%	Less than or equal to 2%	Greater than 48 inches	1	25	83
1474	8/12/2015	Sandt DOT	Nashua	Amherst Street	Diagonal	Asphalt	Good	Yes	Yes	No	No	No	No	Yes	Yes	Yes	Yes	Less than 8.33%	Less than or equal to 2%	Greater than 48 inches	1	25	83
1475	8/12/2015	Sandt DOT	Nashua	Amherst Street	Parallel	Asphalt	Good	Yes	Yes	No	No	No	No	Yes	Yes	NA	Yes	Less than 8.33%	Less than or equal to 2%	Greater than 48 inches	1	25	83
1476	8/12/2015	Sandt DOT	Nashua	Amherst Street	Diagonal	Asphalt	Good	Yes	Yes	No	No	No	No	Yes	Yes	NA	Yes	Less than 8.33%	Less than or equal to 2%	Greater than 48 inches	1	25	83
1302	7/23/2015	Sandt DOT	Derry	E Broadway	Diagonal	Asphalt	Good	Yes	Yes	No	No	No	No	Yes	Yes	Yes	Yes	Less than 8.33%	Less than or equal to 2%	Greater than 48 inches	1	25	83
1312	7/23/2015	Sandt DOT	Derry	E Broadway	Diagonal	Asphalt	Good	Yes	Yes	No	No	No	No	Yes	Yes	Yes	Yes	Less than 8.33%	Less than or equal to 2%	Greater than 48 inches	1	25	83
1313	7/23/2015	Sandt DOT	Derry	E Broadway	Diagonal	Asphalt	Good	Yes	Yes	No	No	No	No	Yes	Yes	Yes	Yes	Less than 8.33%	Less than or equal to 2%	Greater than 48 inches	1	25	83
1314	7/23/2015	Sandt DOT	Derry	E Broadway	Diagonal	Asphalt	Good	Yes	Yes	No	No	No	No	Yes	Yes	Yes	Yes	Less than 8.33%	Less than or equal to 2%	Greater than 48 inches	1	25	83
2172	10/20/2015	Sandt DOT	Exeter	Portsmouth Ave	Perpendicular	Asphalt	Good	Yes	Yes	No	No	No	No	Yes	Yes	NA	Yes	Less than 8.33%	Less than or equal to 2%	Greater than 48 inches	1	25	83
2173	10/20/2015	Sandt DOT	Exeter	Portsmouth Ave	Perpendicular	Asphalt	Good	Yes	Yes	No	No	No	No	Yes	Yes	NA	Yes	Less than 8.33%	Less than or equal to 2%	Greater than 48 inches	1	25	83
2174	10/20/2015	Sandt DOT	Exeter	Portsmouth Ave	Perpendicular	Asphalt	Good	Yes	Yes	No	No	No	No	Yes	Yes	NA	Yes	Less than 8.33%	Less than or equal to 2%	Greater than 48 inches	1	25	83
2177	10/20/2015	Sandt DOT	Exeter	Portsmouth Ave	Perpendicular	Asphalt	Good	Yes	Yes	No	No	No	No	Yes	Yes	NA	Yes	Less than 8.33%	Less than or equal to 2%	Greater than 48 inches	1	25	83
2289	10/27/2015	Sandt DOT	Hampton	Ocean Blvd	Diagonal	Asphalt	Good	Yes	Yes	No	No	No	No	Yes	Yes	Yes	Yes	Less than 8.33%	Less than or equal to 2%	Greater than 48 inches	1	25	83
2290	10/27/2015	Sandt DOT	Hampton	Ocean Blvd	Diagonal	Asphalt	Good	Yes	Yes	No	No	No	No	Yes	Yes	Yes	Yes	Less than 8.33%	Less than or equal to 2%	Greater than 48 inches	1	25	83
2291	10/27/2015	Sandt DOT	Hampton	Ocean Blvd	Diagonal	Asphalt	Good	Yes	Yes	No	No	No	No	Yes	Yes	Yes	Yes	Less than 8.33%	Less than or equal to 2%	Greater than 48 inches	1	25	83
2292	10/27/2015	Sandt DOT	Hampton	Ocean Blvd	Diagonal	Asphalt	Good	Yes	Yes	No	No	No	No	Yes	Yes	Yes	Yes	Less than 8.33%	Less than or equal to 2%	Greater than 48 inches	1	25	83
2293	10/27/2015	Sandt DOT	Hampton	Ocean Blvd	Perpendicular	Asphalt	Good	Yes	Yes	No	No	No	No	Yes	Yes	NA	Yes	Less than 8.33%	Less than or equal to 2%	Greater than 48 inches	1	25	83
2297	10/27/2015	Sandt DOT	Hampton	High Street	Diagonal	Asphalt	Good	Yes	Yes	No	No	No	No	Yes	Yes	Yes	Yes	Less than 8.33%	Less than or equal to 2%	Greater than 48 inches	1	25	83
2285	10/26/2015	Sandt DOT	Hampton	Ocean Blvd	Diagonal	Asphalt	Good	Yes	Yes	No	No	No	No	Yes	Yes	NA	Yes	Less than 8.33%	Less than or equal to 2%	Greater than 48 inches	1	25	83
2286	10/26/2015	Sandt DOT	Hampton	Ocean Blvd	Diagonal	Asphalt	Good	Yes	Yes	No	No	No	No	Yes	Yes	NA	Yes	Less than 8.33%	Less than or equal to 2%	Greater than 48 inches	1	25	83
2046	10/7/2015	Sandt DOT	Newington	Gosling Road	Diagonal	Asphalt	Good	Yes	Yes	No	No	No	No	Yes	Yes	Yes	Yes	Less than 8.33%	Less than or equal to 2%	Greater than 48 inches	1	25	83
2048	10/7/2015	Sandt DOT	Newington	Gosling Road	Diagonal	Asphalt	Good	Yes	Yes	No	No	No	No	Yes	Yes	Yes	Yes	Less than 8.33%	Less than or equal to 2%	Greater than 48 inches	1	25	83
2049	10/7/2015	Sandt DOT	Newington	Gosling Road	Diagonal	Asphalt	Good	Yes	Yes	No	No	No	No	Yes	Yes	Yes	Yes	Less than 8.33%	Less than or equal to 2%	Greater than 48 inches	1	25	83
1832	9/24/2015	Sandt DOT	Enfield	U.S. 4	Perpendicular	Asphalt	Good	Yes	Yes	No	No	No	No	Yes	Yes	NA	Yes	Less than 8.33%	Less than or equal to 2%	Greater than 48 inches	1	25	83
1532	8/17/2015	Sandt DOT	Antrim	Main Street	Parallel	Asphalt	Good	Yes	Yes	No	No	No	No	Yes	Yes	NA	Yes	Less than 8.33%	Less than or equal to 2%	Greater than 48 inches	1	25	83
1246	7/22/2015	Sandt DOT	Londonderry	Nashua Road	Perpendicular	Asphalt	Good	Yes	Yes	No	No	No	No	Yes	Yes	NA	Yes	Less than 8.33%	Less than or equal to 2%	Greater than 48 inches	1	25	83
294	7/13/2015	Sandt DOT	Nashua	East Dunstable Road	Perpendicular	Asphalt	Good	Yes	Yes	No	No	No	No	Yes	Yes	NA	Yes	Less than 8.33%	Less than or equal to 2%	Greater than 48 inches	1	25	83
295	7/13/2015	Sandt DOT	Nashua	East Dunstable Road	Perpendicular	Asphalt	Good	Yes	Yes	No	No	No	No	Yes	Yes	NA	Yes	Less than 8.33%	Less than or equal to 2%	Greater than 48 inches	1	25	83
296	7/13/2015	Sandt DOT	Nashua	East Dunstable Road	Perpendicular	Asphalt	Good	Yes	Yes	No	No	No	No	Yes	Yes	NA	Yes	Less than 8.33%	Less than or equal to 2%	Greater than 48 inches	1	25	83
297	7/13/2015	Sandt DOT	Nashua	East Dunstable Road	Perpendicular	Asphalt	Good	Yes	Yes	No	No	No	No	Yes	Yes	NA	Yes	Less than 8.33%	Less than or equal to 2%	Greater than 48 inches	1	25	83
298	7/13/2015	Sandt DOT	Nashua	East Dunstable Road	Parallel	Asphalt	Good	Yes	Yes	No	No	No	No	Yes	Yes	NA	Yes	Less than 8.33%	Less than or equal to 2%	Greater than 48 inches	1	25	83
299	7/13/2015	Sandt DOT	Nashua	East Dunstable Road	Parallel	Asphalt	Good	Yes	Yes	No	No	No	No	Yes	Yes	NA	Yes	Less than 8.33%	Less than or equal to 2%	Greater than 48 inches	1	25	83
300	7/13/2015	Sandt DOT	Nashua	East Dunstable Road	Perpendicular	Asphalt	Good	Yes	Yes	No	No	No	No	Yes	Yes	NA	Yes	Less than 8.33%	Less than or equal to 2%	Greater than 48 inches	1	25	83
301	7/13/2015	Sandt DOT	Nashua	East Dunstable Road	Parallel	Asphalt	Good	Yes	Yes	No	No	No	No	Yes	Yes	NA	Yes	Less than 8.33%	Less than or equal to 2%	Greater than 48 inches	1	25	83
305	7/13/2015	Sandt DOT	Nashua	East Dunstable Road	Perpendicular	Asphalt	Good	Yes	Yes	No	No	No	No	Yes	Yes	NA	Yes	Less than 8.33%	Less than or equal to 2%	Greater than 48 inches	1	25	83
308	7/13/2015	Sandt DOT	Nashua	East Dunstable Road	Perpendicular	Asphalt	Good	Yes	Yes	No	No	No	No	Yes	Yes	NA	Yes	Less than 8.33%	Less than or equal to 2%	Greater than 48 inches	1	25	83
309	7/13/2015	Sandt DOT	Nashua	East Dunstable Road	Perpendicular	Asphalt	Good	Yes	Yes	No	No	No	No	Yes	Yes	NA	Yes	Less than 8.33%	Less than or equal to 2%	Greater than 48 inches	1	25	83
313	7/13/2015	Sandt DOT	Nashua	East Dunstable Road	Perpendicular	Asphalt	Good	Yes	Yes	No	No	No	No	Yes	Yes	NA	Yes	Less than 8.33%	Less than or equal to 2%	Greater than 48 inches	1	25	83
314	7/13/2015	Sandt DOT	Nashua	East Dunstable Road	Perpendicular	Asphalt	Good	Yes	Yes	No	No	No	No	Yes	Yes	NA	Yes	Less than 8.33%	Less than or equal to 2%	Greater than 48 inches	1	25	83
315	7/13/2015	Sandt DOT	Nashua	East Dunstable Road	Perpendicular	Asphalt	Good	Yes	Yes	No	No	No	No	Yes	Yes	NA	Yes	Less than 8.33%	Less than or equal to 2%	Greater than 48 inches	1	25	83
238	7/9/2015	Sandt DOT	Merrimack	Greeley Street	Parallel	Asphalt	Good	Yes	Yes	No	No	No	No	Yes	Yes	NA	Yes	Less than 8.33%	Less than or equal to 2%	Greater than 48 inches	1	25	83
185	7/6/2015	Sandt DOT	Manchester	S Willow Street	Perpendicular	Asphalt	Good	Yes	Yes	No	No	No	No	Yes	Yes	NA	Yes	Less than 8.33%	Less than or equal to 2%	Greater than 48 inches	1	25	83
186	7/6/2015	Sandt DOT	Manchester	S Willow Street	Perpendicular	Asphalt	Good	Yes	Yes	No	No	No	No	Yes	Yes	NA	Yes	Less than 8.33%	Less than or equal to 2%	Greater than 48 inches	1	25	83
1447	8/10/2015	Sandt DOT	Hillsborough	W Main Street	Diagonal	Asphalt	Good	Yes	Yes	No	No	No	No	Yes	Yes	Yes	Yes	Less than 8.33%	Less than or equal to 2%	Greater than 48 inches	1	25	83
1450	8/10/2015	Sandt DOT	Hillsborough	W Main Street	Perpendicular	Asphalt	Good	Yes	Yes	No	No	No	No	Yes	Yes	Yes	Yes	Less than 8.33%	Less than or equal to 2%	Greater than 48 inches	1	25	83
1451	8/10/2015	Sandt DOT	Hillsborough	W Main Street	Diagonal	Asphalt	Good	Yes	Yes	No	No	No	No	Yes	Yes	Yes	Yes	Less than 8.33%	Less than or equal to 2%	Greater than 48 inches	1	25	83
1452	8/10/2015	Sandt DOT	Hillsborough	W Main Street	Diagonal	Asphalt	Good	Yes	Yes	No	No	No	No	Yes	Yes	Yes	Yes	Less than 8.33%	Less than or equal to 2%	Greater than 48 inches	1	25	83
2201	10/21/2015	Sandt DOT	Portsmouth	Market Street	Parallel	Asphalt	Good	Yes	Yes	No	No	No	No	Yes	Yes	NA	Yes	Less than 8.33%	Less than or equal to 2%	Greater than 48 inches	1	25	83
2202	10/21/2015	Sandt DOT	Portsmouth	Market Street	Parallel	Asphalt	Good	Yes	Yes	No	No	No	No	Yes	Yes	NA	Yes	Less than 8.33%	Less than or equal to 2%	Greater than 48 inches	1	25	83
2020	10/6/2015	Sandt DOT	Dover	Knox Marsh Road	Perpendicular	Asphalt	Good	Yes	Yes	No	No	No	No	Yes	Yes	NA	Yes	Less than 8.33%	Less than or equal to 2%	Greater than 48 inches	1	25	83
2023	10/6/2015	Sandt DOT	Dover	Knox Marsh Road	Perpendicular	Asphalt	Good	Yes	Yes	No	No	No	No	Yes	Yes	NA	Yes	Less than 8.33%	Less than or equal to 2%	Greater than 48 inches	1	25	83
2024	10/6/2015	Sandt DOT	Dover	Knox Marsh Road	Perpendicular	Asphalt	Good	Yes	Yes	No	No	No	No	Yes	Yes	NA	Yes	Less than 8.33%	Less than or equal to 2%	Greater than 48 inches	1	25	83
2218	10/22/2015	Sandt DOT	Portsmouth	Woodbury Ave	Diagonal	Asphalt	Good	Yes	Yes	No	No	No	No	Yes	Yes	Yes	Yes	Less than 8.33%	Less than or equal to 2%	Greater than 48 inches	1	25	83
2219	10/22/2015	Sandt DOT	Portsmouth	Woodbury Ave	Diagonal	Asphalt	Good	Yes	Yes	No	No	No	No	Yes	Yes	Yes	Yes	Less than 8.33%	Less than or equal to 2%	Greater than 48 inches	1	25	83
2220	10/22/2015	Sandt DOT	Portsmouth	Woodbury Ave	Diagonal	Asphalt	Good	Yes	Yes	No	No	No	No	Yes	Yes	Yes	Yes	Less than 8.33%	Less than or equal to 2%	Greater than 48 inches	1	25	83
1900	9/29/2015	Sandt DOT	Northwood	Rt 4	Diagonal	Asphalt	Good	Yes	Yes	No	No	No	No	Yes	Yes	Yes	Yes	Less than 8.33%	Less than or equal to 2%	Greater than 48 inches	1	25	83
1901	9/29/2015	Sandt DOT	Northwood	Rt 4	Diagonal	Asphalt	Good	Yes	Yes	No	No	No	No	Yes	Yes	Yes	Yes	Less than 8.33%	Less than or equal to 2%	Greater than 48 inches	1	25	83
1783	9/21/2015	Sandt DOT	Hanover	Rt 10	Perpendicular	Asphalt	Good	Yes	Yes	No	No	No	No	Yes	Yes	NA	Yes	Less than 8.33%	Less than or equal to 2%	Greater than 48 inches	1	25	83
1784	9/21/2015	Sandt DOT	Hanover	Rt 10	Perpendicular	Asphalt	Good	Yes	Yes	No	No	No	No	Yes	Yes	NA	Yes	Less than 8.33%	Less than or equal to 2%	Greater than 48 inches	1	25	83
1785	9/21/2015	Sandt DOT	Hanover	Rt 10	Perpendicular	Asphalt	Good	Yes	Yes	No	No	No	No	Yes	Yes	NA	Yes	Less than 8.33%	Less than or equal to 2%	Greater than 48 inches	1	25	83
1786	9/21/2015	Sandt DOT	Hanover	Rt 10	Perpendicular	Asphalt	Good	Yes	Yes	No	No	No	No	Yes	Yes	NA	Yes	Less than 8.33%	Less than or equal to 2%	Greater than 48 inches	1	25	83
1523	8/17/2015	Sandt DOT	Antrim	Main Street	Perpendicular	Asphalt	Good	Yes	Yes	No	No	No	No	Yes	Yes	NA	Yes	Less than 8.33%	Less than or equal to 2%	Greater than 48 inches	1	25	83
1526	8/17/2015	Sandt DOT	Antrim	Main Street	Perpendicular	Asphalt	Good	Yes	Yes	No	No	No	No	Yes	Yes	NA	Yes	Less than 8.33%	Less than or equal to 2%	Greater than 48 inches	1	25	83
1527	8/17/2015	Sandt DOT	Antrim	Main Street	Perpendicular	Asphalt	Good	Yes	Yes	No	No	No	No	Yes	Yes	NA	Yes	Less than 8.33%	Less than or equal to 2%	Greater than 48 inches	1	25	83
1480	8/12/2015	Sandt DOT	Merrimack	Milford Road	Diagonal	Asphalt	Good	Yes	Yes	No	No	No	No	Yes	Yes	Yes	Yes	Less than 8.33%	Less than or equal to 2%	Greater than 48 inches	1	25	83
1481	8/12/2015	Sandt DOT	Merrimack	Milford Road	Diagonal	Asphalt	Good	Yes	Yes	No	No	No	No	Yes	Yes	Yes	Yes	Less than 8.33%	Less than or equal to 2%	Greater than 48 inches	1	25	83
1482	8/12/2015	Sandt DOT	Merrimack	Milford Road	Perpendicular	Asphalt	Good	Yes	Yes	No	No	No	No	Yes	Yes	Yes	Yes	Less than 8.33%	Less than or equal to 2%	Greater than 48 inches	1	25	83
1483	8/12/2015	Sandt DOT	Merrimack	Milford Road	Perpendicular	Asphalt	Good	Yes	Yes	No	No	No	No	Yes	Yes	Yes	Yes	Less than 8.33%	Less than or equal to 2%	Greater than 48 inches	1	25	83
1484	8/12/2015	Sandt DOT	Merrimack	Milford Road	Perpendicular	Asphalt	Good	Yes	Yes	No	No	No	No	Yes	Yes	Yes	Yes	Less than 8.33%	Less than or equal to 2%	Greater than 48 inches	1	25	83
1485	8/12/2015	Sandt DOT	Merrimack	Milford Road	Perpendicular	Asphalt	Good	Yes	Yes	No	No	No	No	Yes	Yes	Yes	Yes	Less than 8.33%	Less than or equal to 2%	Greater than 48 inches	1	25	83
236	7/9/2015	Sandt DOT	Merrimack	Bedford Road	Diagonal	Asphalt	Good	Yes	Yes	No	No	No	No	Yes	Yes	Yes	Yes	Less than 8.33%	Less than or equal to 2%	Greater than 48 inches	1	25	83
181	7/6/2015	Sandt DOT	Manchester	S Willow Street	Diagonal	Asphalt	Good	Yes	Yes	No	No	No	No	Yes	Yes	Yes	Yes	Less than 8.33%	Less than or equal to 2%	Greater than 48 inches	1	25	83
182	7/6/2015	Sandt DOT	Manchester	S Willow Street	Diagonal	Asphalt	Good	Yes	Yes	No	No	No	No	Yes	Yes	Yes	Yes	Less than 8.33%	Less than or equal to 2%	Greater than 48 inches	1	25	83
165	7/2/2015	Sandt DOT	Manchester	Hanover Street	Parallel	Asphalt	Good	Yes	Yes	No	No	No	No	Yes	Yes	NA	Yes	Less than 8.33%	Less than or equal to 2%	Greater than 48 inches	1	25	83
166	7/2/2015	Sandt DOT	Manchester	Hanover Street	Parallel	Asphalt	Good	Yes	Yes	No	No	No	No	Yes	Yes	NA	Yes	Less than 8.33%	Less than or equal to 2%	Greater than 48 inches	1	25	83
168	7/2/2015	Sandt DOT	Manchester	Hanover Street	Parallel	Asphalt	Good	Yes	Yes	No	No	No	No	Yes	Yes	NA	Yes	Less than 8.33%	Less than or equal to 2%	Greater than 48 inches	1	25	83
169	7/2/2015	Sandt DOT	Manchester	Hanover Street	Perpendicular	Asphalt	Good	Yes	Yes	No	No	No	No	Yes	Yes	NA	Yes	Less than 8.33%	Less than or equal to 2%	Greater than 48 inches	1	25	83
170	7/2/2015	Sandt DOT	Manchester	Hanover Street	Parallel	Asphalt	Good	Yes	Yes	No	No	No	No	Yes	Yes	NA	Yes	Less than 8.33%	Less than or equal to 2%	Greater than 48 inches	1	25	83
171	7/2/2015	Sandt DOT	Manchester	Hanover Street	Parallel	Asphalt	Good	Yes	Yes	No	No	No	No	Yes	Yes	NA	Yes	Less than 8.33%	Less than or equal to 2%	Greater than 48 inches	1	25	83
172	7/2/2015	Sandt DOT	Manchester	Hanover Street	Parallel	Asphalt	Good	Yes	Yes	No	No	No	No	Yes	Yes	NA	Yes	Less than 8.33%	Less than or equal to 2%	Greater than 48 inches	1	25	83
173	7/2/2015	Sandt DOT	Manchester	Hanover Street	Parallel	Asphalt	Good	Yes	Yes	No	No	No	No	Yes	Yes	NA	Yes	Less than 8.33%	Less than or equal to 2%	Greater than 48 inches	1	25	83
1322	7/23/2015	Sandt DOT	Derry	S Main St.	Parallel	Asphalt	Good	Yes	Yes	No	No	No	No	Yes	Yes	NA	Yes	Less than 8.33%	Less than or equal to 2%	Greater than 48 inches	1	25	83
1868	9/28/2015	Sandt DOT	Farmington	Main Street	Parallel	Asphalt	Good	Yes	Yes	No	No	No	No	Yes	Yes	NA	Yes	Less than 8.33%	Less than or equal to 2%	Greater than 48 inches	1	25	83
1759	9/16/2015	Sandt DOT	Newport	Rt 10	Perpendicular	Asphalt	Good	Yes	Yes	No	No	No	No	Yes	Yes	NA	Yes	Less than 8.33%	Less than or equal to 2%	Greater than 48 inches	1	25	83
4058	2/29/2016	Sandt DOT	Seabrook	Rt 1	Perpendicular	Asphalt	Good	Yes	Yes	No	No	No	No	Yes	Yes	Yes	Yes	Less than 8.33%	Less than or equal to 2%	Greater than 48 inches	1	25	83
4060	2/29/2016	Sandt DOT	Seabrook	Rt 1	Perpendicular	Asphalt	Good	Yes	Yes	No	No	No	No	Yes	Yes	Yes	Yes	Less than 8.33%	Less than or equal to 2%	Greater than 48 inches	1	25	83
2901	1/7/2016	Sandt DOT	Tilton	Rt 3	Diagonal	Asphalt	Good	Yes	Yes	No	No	No	No	Yes	Yes	Yes	Yes	Less than 8.33%	Less than or equal to 2%	Greater than 48 inches	1	25	83
2879	1/4/2016	Nichols district 1	Woodsville	Rte 302	Perpendicular	Asphalt	Good	Yes	Yes	No	No	No	No	Yes	NA	NA	Yes	Less than 8.33%	Less than or equal to 2%	Greater than 48 inches	1	25	83
2860	12/28/2015	Sandt DOT	Meredith	Rt 3	Diagonal	Asphalt	Good	Yes	Yes	No	No	No	No	Yes	Yes	Yes	Yes	Less than 8.33%	Less than or equal to 2%	Greater than 48 inches	1	25	83
2862	12/28/2015	Sandt DOT	Meredith	Rt 3	Diagonal	Asphalt	Good	Yes	Yes	No	No	No	No	Yes	Yes	Yes	Yes	Less than 8.33%	Less than or equal to 2%	Greater than 48 inches	1	25	83
2864	12/28/2015	Sandt DOT	Meredith	Rt 3	Perpendicular	Asphalt	Good	Yes	Yes	No	No	No	No	Yes	Yes	NA	Yes	Less than 8.33%	Less than or equal to 2%	Greater than 48 inches	1	25	83
2766	12/15/2015	Sandt DOT	Tilton	Rt 3	Diagonal	Asphalt	Good	Yes	Yes	No	No	No	No	Yes	Yes	NA	Yes	Less than 8.33%	Less than or equal to 2%	Greater than 48 inches	1	25	83
2767	12/15/2015	Sandt DOT	Tilton	Rt 3	Diagonal	Asphalt	Good	Yes	Yes	No	No	No	No	Yes	Yes	NA	Yes	Less than 8.33%	Less than or equal to 2%	Greater than 48 inches	1	25	83
2771	12/15/2015	Sandt DOT	Tilton	Rt 3	Diagonal	Asphalt	Good	Yes	Yes	No	No	No	No	Yes	Yes	NA	Yes	Less than 8.33%	Less than or equal to 2%	Greater than 48 inches	1	25	83
2772	12/15/2015	Sandt DOT	Tilton	Rt 3	Diagonal	Asphalt	Good	Yes	Yes	No	No	No	No	Yes	Yes	NA	Yes	Less than 8.33%	Less than or equal to 2%	Greater than 48 inches	1	25	83
2477	11/13/2015	Sandt DOT	Canterbury	Canterbury Rest Area	Combined	Asphalt	Good	Yes	Yes	No	No	No	No	Yes	Yes	NA	Yes	Less than 8.33%	Less than or equal to 2%	Greater than 48 inches	1	25	83
2478	11/13/2015	Sandt DOT	Canterbury	Canterbury Rest Area	Combined	Asphalt	Good	Yes	Yes	No	No	No	No	Yes	Yes	NA	Yes	Less than 8.33%	Less than or equal to 2%	Greater than 48 inches	1	25	83

2508	11/6/2015	Sandt DOT	Seabrook	Rt 1	Diagonal	Asphalt	Good	Yes	Yes	No	No	No	No	Yes	Yes	Yes	Yes	Less than 8.33%	Less than or equal to 2%	Greater than 48 inches	1	25	83
2509	11/6/2015	Sandt DOT	Seabrook	Rt 1	Diagonal	Asphalt	Good	Yes	Yes	No	No	No	No	Yes	Yes	Yes	Yes	Less than 8.33%	Less than or equal to 2%	Greater than 48 inches	1	25	83
2510	11/6/2015	Sandt DOT	Seabrook	Rt 1	Diagonal	Asphalt	Good	Yes	Yes	No	No	No	No	Yes	Yes	Yes	Yes	Less than 8.33%	Less than or equal to 2%	Greater than 48 inches	1	25	83
2511	11/6/2015	Sandt DOT	Seabrook	Rt 1	Diagonal	Asphalt	Good	Yes	Yes	No	No	No	No	Yes	Yes	Yes	Yes	Less than 8.33%	Less than or equal to 2%	Greater than 48 inches	1	25	83
2517	11/6/2015	Sandt DOT	Seabrook	Rt 1	Diagonal	Asphalt	Good	Yes	Yes	No	No	No	No	Yes	Yes	Yes	Yes	Less than 8.33%	Less than or equal to 2%	Greater than 48 inches	1	25	83
2518	11/6/2015	Sandt DOT	Seabrook	Rt 1	Diagonal	Asphalt	Good	Yes	Yes	No	No	No	No	Yes	Yes	Yes	Yes	Less than 8.33%	Less than or equal to 2%	Greater than 48 inches	1	25	83
4136	3/18/2016	Sandt DOT	Plaistow	Rt 125	Perpendicular	Asphalt	Good	Yes	Yes	No	No	No	No	Yes	Yes	NA	Yes	Less than 8.33%	Less than or equal to 2%	Greater than 48 inches	1	25	83
2089	10/8/2015	Sandt DOT	Durham	Dover Road	Perpendicular	Concrete	Good	Yes	No	Yes	No	No	No	Yes	Yes	NA	Yes	Less than 8.33%	Less than or equal to 2%	Greater than 48 inches	1	24	84
2160	10/19/2015	Sandt DOT	Concord	South Street	Parallel	Concrete	Good	Yes	No	Yes	No	No	No	Yes	Yes	NA	Yes	Less than 8.33%	Less than or equal to 2%	Greater than 48 inches	1	24	84
2170	10/19/2015	Sandt DOT	Concord	South Street	Parallel	Concrete	Good	Yes	No	Yes	No	No	No	Yes	Yes	NA	Yes	Less than 8.33%	Less than or equal to 2%	Greater than 48 inches	1	24	84
2171	10/19/2015	Sandt DOT	Concord	South Street	Parallel	Concrete	Good	Yes	No	Yes	No	No	No	Yes	Yes	NA	Yes	Less than 8.33%	Less than or equal to 2%	Greater than 48 inches	1	24	84
2956	1/11/2016	Wilkinson District 1	Woodstock	Rte. 112	Parallel	Concrete	Good	Yes	No	Yes	No	No	No	Yes	Yes	NA	Yes	Less than 8.33%	Less than or equal to 2%	Greater than 48 inches	1	24	84
2763	12/14/2015	Patch district 1	Littleton	Rte 302	Perpendicular	Concrete	Good	Yes	No	Yes	No	No	No	Yes	Yes	NA	Yes	Less than 8.33%	Less than or equal to 2%	Greater than 48 inches	1	24	84
2589	11/30/2015	Sandt DOT	Concord	Rt 13	Parallel	Concrete	Good	Yes	No	Yes	No	No	No	Yes	Yes	NA	Yes	Less than 8.33%	Less than or equal to 2%	Greater than 48 inches	1	24	84
2001	10/5/2015	Sandt DOT	Rochester	Washington Street	Parallel	Concrete	Good	Yes	Yes	Yes	No	No	No	Yes	No	NA	Yes	Less than 8.33%	Less than or equal to 2%	Greater than 48 inches	1	24	84
1500	8/13/2015	Sandt DOT	Hollis	Ash	Perpendicular	Concrete	Good	Yes	Yes	Yes	No	No	No	Yes	No	NA	Yes	Less than 8.33%	Less than or equal to 2%	Greater than 48 inches	1	24	84
72	6/22/2015	Sandt DOT	Allenstown	Main	Parallel	Concrete	Good	Yes	Yes	Yes	No	No	No	No	Yes	NA	Yes	Less than 8.33%	Less than or equal to 2%	Greater than 48 inches	1	24	84
52	6/17/2015	Sandt DOT	Pembroke	Broadway	Parallel	Concrete	Good	Yes	Yes	Yes	No	No	Yes	Yes	Yes	NA	Yes	Less than 8.33%	Less than or equal to 2%	Greater than 48 inches	1	24	84
90	6/23/2015	Sandt DOT	Hooksett	Hooksett Road	Diagonal	Concrete	Good	Yes	Yes	Yes	No	No	Yes	Yes	Yes	Yes	Yes	Less than 8.33%	Less than or equal to 2%	Greater than 48 inches	1	24	84
1490	8/12/2015	Sandt DOT	Amherst	101A	Perpendicular	Concrete	Good	Yes	Yes	Yes	No	No	No	Yes	No	NA	Yes	Less than 8.33%	Less than or equal to 2%	Greater than 48 inches	1	24	84
1491	8/12/2015	Sandt DOT	Amherst	101A	Perpendicular	Concrete	Good	Yes	Yes	Yes	No	No	No	Yes	No	NA	Yes	Less than 8.33%	Less than or equal to 2%	Greater than 48 inches	1	24	84
1492	8/12/2015	Sandt DOT	Amherst	101A	Parallel	Concrete	Good	Yes	Yes	Yes	No	No	No	Yes	No	NA	Yes	Less than 8.33%	Less than or equal to 2%	Greater than 48 inches	1	24	84
1493	8/12/2015	Sandt DOT	Amherst	101A	Parallel	Concrete	Good	Yes	Yes	Yes	No	No	No	Yes	No	NA	Yes	Less than 8.33%	Less than or equal to 2%	Greater than 48 inches	1	24	84
1494	8/12/2015	Sandt DOT	Amherst	101A	Parallel	Concrete	Good	Yes	Yes	Yes	No	No	No	Yes	No	NA	Yes	Less than 8.33%	Less than or equal to 2%	Greater than 48 inches	1	24	84
82	6/22/2015	Sandt DOT	Hooksett	College Park	Perpendicular	Concrete	Good	Yes	Yes	Yes	No	No	No	No	Yes	NA	Yes	Less than 8.33%	Less than or equal to 2%	Greater than 48 inches	1	24	84
1561	8/18/2015	Sandt DOT	Peterborough	202	Parallel	Concrete	Good	Yes	Yes	Yes	No	No	Yes	Yes	Yes	NA	Yes	Less than 8.33%	Less than or equal to 2%	Greater than 48 inches	1	24	84
1562	8/18/2015	Sandt DOT	Peterborough	202	Parallel	Concrete	Good	Yes	Yes	Yes	No	No	Yes	Yes	Yes	NA	Yes	Less than 8.33%	Less than or equal to 2%	Greater than 48 inches	1	24	84
359	7/15/2015	Sandt DOT	Windham	111	Diagonal	Concrete	Good	Yes	Yes	Yes	No	No	No	Yes	No	NA	Yes	Less than 8.33%	Less than or equal to 2%	Greater than 48 inches	1	24	84
2820	12/18/2015	Sandt DOT	Center Harbor	Plymouth St	Parallel	Concrete	Good	Yes	Yes	Yes	No	No	No	Yes	No	NA	Yes	Less than 8.33%	Less than or equal to 2%	Greater than 48 inches	1	24	84
2821	12/18/2015	Sandt DOT	Center Harbor	Plymouth St	Parallel	Concrete	Good	Yes	Yes	Yes	No	No	No	Yes	No	NA	Yes	Less than 8.33%	Less than or equal to 2%	Greater than 48 inches	1	24	84
2823	12/18/2015	Sandt DOT	Center Harbor	Plymouth St	Parallel	Concrete	Good	Yes	Yes	Yes	No	No	No	Yes	No	NA	Yes	Less than 8.33%	Less than or equal to 2%	Greater than 48 inches	1	24	84
2481	11/10/2015	NM SWRPC	Hinsdale	Church St	Other	Concrete	Good	Yes	Yes	Yes	No	No	No	Yes	No	NA	Yes	Less than 8.33%	Less than or equal to 2%	Greater than 48 inches	1	24	84
2483	11/10/2015	NM SWRPC	Hinsdale	Main St	Other	Concrete	Good	Yes	Yes	Yes	No	No	No	Yes	No	NA	Yes	Less than 8.33%	Less than or equal to 2%	Greater than 48 inches	1	24	84
2482		NM SWRPC	Hinsdale	Church St	Diagonal	Concrete	Good	Yes	Yes	Yes	No	No	No	Yes	No	Yes	Yes	Less than 8.33%	Less than or equal to 2%	Greater than 48 inches	1	24	84
4	10/24/2014	Unh t2	Durham	McDaniel dr	Perpendicular	Concrete	Good	Yes	Yes	Yes	No	No	No	Yes	No	NA	Yes	Less than 8.33%	Less than or equal to 2%	Greater than 48 inches	1	24	84
15					Perpendicular	Concrete	Good	Yes	Yes	Yes	No	No	No	Yes	No	NA	Yes	Less than 8.33%	Less than or equal to 2%	Greater than 48 inches	1	24	84
4092	3/16/2016	Sandt DOT	Plaistow	Rt 125	Diagonal	Concrete	Good	Yes	Yes	Yes	No	No	Yes	Yes	Yes	Yes	Yes	Less than 8.33%	Less than or equal to 2%	Greater than 48 inches	1	24	84
4096	3/16/2016	Sandt DOT	Plaistow	Rt 125	Diagonal	Concrete	Good	Yes	Yes	Yes	No	No	Yes	Yes	Yes	Yes	Yes	Less than 8.33%	Less than or equal to 2%	Greater than 48 inches	1	24	84
4097	3/16/2016	Sandt DOT	Plaistow	Rt 125	Diagonal	Concrete	Good	Yes	Yes	Yes	No	No	Yes	Yes	Yes	Yes	Yes	Less than 8.33%	Less than or equal to 2%	Greater than 48 inches	1	24	84
4099	3/16/2016	Sandt DOT	Plaistow	Rt 125	Diagonal	Concrete	Good	Yes	Yes	Yes	No	No	Yes	Yes	Yes	Yes	Yes	Less than 8.33%	Less than or equal to 2%	Greater than 48 inches	1	24	84
4100	3/16/2016	Sandt DOT	Plaistow	Rt 125	Diagonal	Concrete	Good	Yes	Yes	Yes	No	No	Yes	Yes	Yes	Yes	Yes	Less than 8.33%	Less than or equal to 2%	Greater than 48 inches	1	24	84
4103	3/16/2016	Sandt DOT	Plaistow	Rt 125	Diagonal	Concrete	Good	Yes	Yes	Yes	No	No	Yes	Yes	Yes	Yes	Yes	Less than 8.33%	Less than or equal to 2%	Greater than 48 inches	1	24	84
4104	3/16/2016	Sandt DOT	Plaistow	Rt 125	Diagonal	Concrete	Good	Yes	Yes	Yes	No	No	Yes	Yes	Yes	Yes	Yes	Less than 8.33%	Less than or equal to 2%	Greater than 48 inches	1	24	84
4105	3/16/2016	Sandt DOT	Plaistow	Rt 125	Diagonal	Concrete	Good	Yes	Yes	Yes	No	No	Yes	Yes	Yes	Yes	Yes	Less than 8.33%	Less than or equal to 2%	Greater than 48 inches	1	24	84
4121	3/18/2016	Sandt DOT	Plaistow	Rt 125	Perpendicular	Concrete	Good	Yes	Yes	Yes	No	No	Yes	Yes	Yes	NA	Yes	Less than 8.33%	Less than or equal to 2%	Greater than 48 inches	1	24	84
4131	3/18/2016	Sandt DOT	Plaistow	Rt 125	Perpendicular	Concrete	Good	Yes	Yes	Yes	No	No	Yes	Yes	Yes	NA	Yes	Less than 8.33%	Less than or equal to 2%	Greater than 48 inches	1	24	84
2784	12/16/2015	Nichols district 1	Littleton	Rte 302	Parallel	Concrete	Good	Yes	Yes	Yes	No	Yes	No	Yes	NA	NA	Yes	8.33% to 10%	Greater than 2%	Greater than 48 inches	1	23	84
2789	12/16/2015	Nichols district 1	Littleton	Rte 302	Parallel	Concrete	Good	Yes	Yes	Yes	No	Yes	No	Yes	NA	NA	Yes	8.33% to 10%	Greater than 2%	Greater than 48 inches	1	23	84
2790	12/16/2015	Nichols district 1	Littleton	Rte 302	Parallel	Concrete	Good	Yes	Yes	Yes	No	Yes	No	Yes	NA	NA	Yes	8.33% to 10%	Greater than 2%	Greater than 48 inches	1	23	84
2751	12/14/2015	Patch district 1	Littleton	Rte 302	Parallel	Concrete	Good	Yes	Yes	Yes	No	Yes	No	Yes	NA	NA	Yes	8.33% to 10%	Greater than 2%	Greater than 48 inches	1	23	84
2783	12/16/2015	Nichols district 1	Littleton	Rte 302	Perpendicular	Concrete	Good	Yes	Yes	Yes	No	Yes	No	Yes	NA	NA	Yes	10% to 12.5%	Less than or equal to 2%	Greater than 48 inches	1	22	85
2785	12/16/2015	Nichols district 1	Littleton	Rte 302	Parallel	Concrete	Good	Yes	Yes	Yes	No	Yes	No	Yes	NA	NA	Yes	10% to 12.5%	Less than or equal to 2%	Greater than 48 inches	1	22	85
2786	12/16/2015	Nichols district 1	Littleton	Rte 302	Parallel	Concrete	Good	Yes	Yes	Yes	No	Yes	No	Yes	NA	NA	Yes	10% to 12.5%	Less than or equal to 2%	Greater than 48 inches	1	22	85
132	6/26/2015	MC SWRPC	North Walpole	Brady Street	Perpendicular	Concrete	Good	No	Yes	Yes	No	No	No	Yes	Yes	NA	Yes	Less than 8.33%	Greater than 2%	Greater than 48 inches	1	22	85
113	6/26/2015	MC SWRPC	North Walpole	Church Street	Diagonal	Concrete	Good	No	Yes	Yes	No	No	No	Yes	Yes	Yes	Yes	Less than 8.33%	Greater than 2%	Greater than 48 inches	1	22	85
135	6/26/2015	MC SWRPC	North Walpole	Center Street	Perpendicular	Concrete	Good	No	Yes	Yes	No	No	No	Yes	Yes	NA	Yes	Less than 8.33%	Greater than 2%	Greater than 48 inches	1	22	85
112	6/26/2015	MC SWRPC	North Walpole	Church Street	Parallel	Concrete	Good	No	Yes	Yes	No	No	No	Yes	Yes	NA	Yes	Less than 8.33%	Greater than 2%	Greater than 48 inches	1	22	85
2962	1/13/2016	Nichols district 1	Woodsville	Rte 302	Parallel	Concrete	Good	No	Yes	Yes	No	No	No	Yes	NA	NA	Yes	Less than 8.33%	Greater than 2%	Greater than 48 inches	1	22	85
2952	1/11/2016	Sandt DOT	Rt 11	Rt 11	Perpendicular	Concrete	Good	No	Yes	Yes	No	No	No	Yes	NA	NA	Yes	Less than 8.33%	Greater than 2%	Greater than 48 inches	1	22	85
2953	1/11/2016	Sandt DOT	Sandt DOT	Rt 11	Perpendicular	Concrete	Good	No	Yes	Yes	No	No	No	Yes	NA	NA	Yes	Less than 8.33%	Greater than 2%	Greater than 48 inches	1	22	85
2921	1/8/2016	Sandt DOT	New London	Newport Road	Parallel	Concrete	Good	No	Yes	Yes	No	No	No	Yes	NA	NA	Yes	Less than 8.33%	Greater than 2%	Greater than 48 inches	1	22	85
2923	1/8/2016	Sandt DOT	New London	Newport Road	Parallel	Concrete	Good	No	Yes	Yes	No	No	No	Yes	NA	NA	Yes	Less than 8.33%	Greater than 2%	Greater than 48 inches	1	22	85
2842	12/23/2015	Sandt DOT	Tilton	Rt 3	Parallel	Concrete	Good	No	Yes	Yes	No	No	No	Yes	NA	NA	Yes	Less than 8.33%	Greater than 2%	Greater than 48 inches	1	22	85
2850	12/23/2015	Sandt DOT	Tilton	Rt 3	Perpendicular	Concrete	Good	No	Yes	Yes	No	No	No	Yes	NA	NA	Yes	Less than 8.33%	Greater than 2%	Greater than 48 inches	1	22	85
2851	12/23/2015	Sandt DOT	Tilton	Rt 3	Perpendicular	Concrete	Good	No	Yes	Yes	No	No	No	Yes	NA	NA	Yes	Less than 8.33%	Greater than 2%	Greater than 48 inches	1	22	85
2856	12/23/2015	Sandt DOT	Tilton	Rt 3	Parallel	Concrete	Good	No	Yes	Yes	No	No	No	Yes	NA	NA	Yes	Less than 8.33%	Greater than 2%	Greater than 48 inches	1	22	85
2730	12/10/2015	Sandt DOT	Laconia	Rt 3	Parallel	Concrete	Good	No	Yes	Yes	No	No	No	Yes	NA	NA	Yes	Less than 8.33%	Greater than 2%	Greater than 48 inches	1	22	85
2731	12/10/2015	Sandt DOT	Laconia	Rt 3	Parallel	Concrete	Good	No	Yes	Yes	No	No	No	Yes	NA	NA	Yes	Less than 8.33%	Greater than 2%	Greater than 48 inches	1	22	85
2701	12/9/2015	Sandt DOT	Mont Vernon	Rt 13	Parallel	Concrete	Good	No	Yes	Yes	No	No	No	Yes	NA	NA	Yes	Less than 8.33%	Greater than 2%	Greater than 48 inches	1	22	85
2702	12/9/2015	Sandt DOT	Mont Vernon	Rt 13	Parallel	Concrete	Good	No	Yes	Yes	No	No	No	Yes	NA	NA	Yes	Less than 8.33%	Greater than 2%	Greater than 48 inches	1	22	85
4113	3/17/2016	Wilkinson District 1	Lincoln	Rte. 112	Parallel	Concrete	Good	No	Yes	Yes	No	No	No	Yes	NA	NA	Yes	Less than 8.33%	Greater than 2%	Greater than 48 inches	1	22	85
2041	10/6/2015	Sandt DOT	Dover	Durham Road	Perpendicular	Asphalt	Good	Yes	No	Yes	No	No	No	Yes	Yes	NA	Yes	Less than 8.33%	Less than or equal to 2%	Greater than 48 inches	1	20	86
2042	10/6/2015	Sandt DOT	Dover	Durham Road	Parallel	Asphalt	Good	Yes	No	Yes	No	No	No	Yes	Yes	NA	Yes	Less than 8.33%	Less than or equal to 2%	Greater than 48 inches	1	20	86
2043	10/6/2015	Sandt DOT	Dover	Durham Road	Parallel	Asphalt	Good	Yes	No	Yes	No	No	No	Yes	Yes	NA	Yes	Less than 8.33%	Less than or equal to 2%	Greater than 48 inches	1	20	86
2044	10/6/2015	Sandt DOT	Dover	Durham Road	Parallel	Asphalt	Good	Yes	No	Yes	No	No	No	Yes	Yes	NA	Yes	Less than 8.33%	Less than or equal to 2%	Greater than 48 inches	1	20	86
2045	10/6/2015	Sandt DOT	Dover	Durham Road	Parallel	Asphalt	Good	Yes	No	Yes	No	No	No	Yes	Yes	NA	Yes	Less than 8.33%	Less than or equal to 2%	Greater than 48 inches	1	20	86
1288	7/23/2015	Sandt DOT	Derry	E Broadway	Parallel	Concrete	Good	Yes	Yes	Yes	No	No	No	Yes	Yes	Yes	Yes	8.33% to 10%	Greater than 2%	Greater than 48 inches	1	20	86
2711	12/9/2015	Sandt DOT	Mont Vernon	Rt 13	Parallel	Concrete	Good	No	Yes	Yes	No	No	No	Yes	NA	NA	Yes	Less than 8.33%	Less than or equal to 2%	36 to 48 inches	1	20	86
2712	12/9/2015	Sandt DOT	Mont Vernon	Rt 13	Parallel	Concrete	Good	No	Yes	Yes	No	No	No	Yes	NA	NA	Yes	Less than 8.33%	Less than or equal to 2%	36 to 48 inches	1	20	86
123	6/26/2015	MC SWRPC	North Walpole	Maple Street	Perpendicular	Concrete	Good	No	Yes	Yes	No	No	No	Yes	Yes	NA	Yes	Less than 8.33%	Less than or equal to 2%	36 to 48 inches	1	20	86
115	6/26/2015	MC SWRPC	North Walpole	Church Street	Perpendicular	Concrete	Good	No	Yes	Yes	No	No	No	Yes	Yes	NA	Yes	Less than 8.33%	Less than or equal to 2%	36 to 48 inches	1	20	86
129	6/26/2015	MC SWRPC	North Walpole	Capron Street	Perpendicular	Concrete	Good	No	Yes	Yes	No	No	No	Yes	Yes	NA	Yes	Less than 8.33%	Less than or equal to 2%	36 to 48 inches	1	20	86
130	6/26/2015	MC SWRPC	North Walpole	Capron Street	Perpendicular	Concrete	Good	No	Yes	Yes	No	No	No	Yes	Yes	NA	Yes	Less than 8.33%	Less than or equal to 2%	36 to 48 inches	1	20	86
117	6/26/2015	MC SWRPC	North Walpole	Spruce Street	Perpendicular	Concrete	Good	No	Yes	Yes	No	No	No	Yes	Yes	NA	Yes	Less than 8.33%	Less than or equal to 2%	36 to 48 inches	1	20	86
118	6/26/2015	MC SWRPC	North Walpole	Spruce Street	Perpendicular	Concrete	Good	No	Yes	Yes	No	No	No	Yes	Yes	NA	Yes	Less than 8.33%	Less than or equal to 2%	36 to 48 inches	1	20	86
119	6/26/2015	MC SWRPC	North Walpole	Spruce Street	Perpendicular	Concrete	Good	No	Yes	Yes	No	No	No	Yes	Yes	NA	Yes	Less than 8.33%	Less than or equal to 2%	36 to 48 inches	1	20	86
120	6/26/2015	MC SWRPC	North Walpole	Spruce Street	Perpendicular	Concrete	Good	No	Yes	Yes	No	No	No	Yes	Yes	NA	Yes	Less than 8.33%	Less than or equal to 2%	36 to 48 inches	1	20	86
121	6/26/2015	MC SWRPC	North Walpole	Pine Street	Perpendicular	Concrete	Good	No	Yes	Yes	No	No	No	Yes	Yes	NA	Yes	Less than 8.33%	Less than or equal to 2%	36 to 48 inches	1	20	86
122	6/26/2015	MC SWRPC	North Walpole	Pine Street	Perpendicular	Concrete	Good	No	Yes	Yes	No	No	No	Yes	Yes	NA	Yes	Less than 8.33%	Less than or equal to 2%	36 to 48 inches	1	20	86
1591	8/24/2015	Sandt DOT	Jaffrey	Main Street	Diagonal	Concrete	Good	Yes	Yes	Yes	No	No	No	Yes	Yes	Yes	Yes	8.33% to 10%	Greater than 2%	Greater than 48 inches	1	20	86
1982	10/5/2015	Sandt DOT	Rochester	Gonic Road	Parallel	Concrete	Good	Yes	Yes	Yes	No	No	No	Yes	Yes	NA	Yes	8.33% to 10%	Greater than 2%	Greater than 48 inches	1	20	86
1582	8/20/2015	Sandt DOT	New Ipswich	Turnpike Road	Perpendicular	Asphalt	Good	Yes	Yes	Yes	No	No	No	Yes	No	NA	Yes	Less than 8.33%	Less than or equal to 2%	Greater than 48 inches	1	20	86
1809	9/23/2015	Sandt DOT	Hanover	S Main	Perpendicular	Concrete	Good	Yes	Yes	Yes	No	No	No	Yes	Yes	NA	Yes	8.33% to 10%	Greater than 2%	Greater than 48 inches	1	20	86
1810	9/23/2015	Sandt DOT	Hanover	S Main	Diagonal	Concrete	Good	Yes	Yes	Yes	No	No	No	Yes	Yes	Yes	Yes	8.33% to 10%	Greater than 2%	Greater than 48 inches	1	20	86
3005	2/2/2016	Wilkinson District 1	Conway	Rtes. 16 & 302	Perpendicular	Concrete	Good	Yes	Yes	Yes	No	No	No	Yes	Yes	NA	Yes	8.33% to 10%	Greater than 2%	Greater than 48 inches	1	20	86
2967	1/25/2016	Wilkinson District 1	Conway	Rte. 302	Parallel	Concrete	Good	Yes	Yes	Yes	No	No	No	Yes	Yes	NA	Yes	8.33% to 10%	Greater than 2%	Greater than 48 inches	1	20	86
2882	1/4/2016	Sandt DOT	Belmont	Daniel Webster Hwy	Parallel	Concrete	Good	Yes	Yes	Yes	No	No	No	Yes	Yes	NA	Yes	8.33% to 10%	Greater than 2%	Greater than 48 inches	1	20	86
2776	12/16/2015	Nichols district 1	Littleton	Rte 302	Combined	Concrete	Fair	Yes	Yes	Yes	No	No	No	Yes	NA	NA	Yes	Less than 8.33%	Greater than 2%	Greater than 48 inches	1	20	86
2794	12/16/2015	Nichols district 1	Littleton	Rte 302	Parallel	Concrete	Good	Yes	Yes	Yes	No	No	No	Yes	NA	NA	Yes	8.33% to 10%	Greater than 2%	Greater than 48 inches	1	20	86
2746	12/14/2015	Sandt DOT	Bristol	Rt 104	Parallel	Concrete	Good	No	Yes	Yes	No	Yes	No	Yes	NA	NA	Yes	Less than 8.33%	Less than or equal to 2%	Greater than 48 inches	1	19	87
2747	12/14/2015	Sandt DOT	Bristol	Rt 104	Parallel	Concrete	Good	No	Yes	Yes	No	Yes	No	Yes	NA	NA	Yes	Less than 8.33%	Less than or equal to 2%	Greater than 48 inches	1	19	87
2276	10/23/2015	Sandt DOT	Newmarket	Main Street	Parallel	Concrete	Good	Yes	Yes	Yes	No	No	No	Yes	Yes	NA	Yes	10% to 12.5%	Less than or equal to 2%	Greater than 48 inches	1	19	87
2277	10/23/2015	Sandt DOT	Newmarket	Main Street	Parallel	Concrete	Good	Yes	Yes	Yes	No	No	No	Yes	Yes	NA	Yes	10% to 12.5%	Less than or equal to 2%	Greater than 48 inches	1	19	87
1911	10/1/2015	Sandt DOT	Rochester	N Main	Diagonal	Concrete	Good	Yes	Yes	Yes	No	No	No	Yes	Yes	Yes	Yes	10% to 12.5%	Less than or equal to 2%	Greater than 48 inches	1	19	87
1726	9/4/2015	Sandt DOT	Marlborough.	Main St 101	Parallel	Concrete	Good	Yes	Yes	Yes	No	No	No	Yes	Yes	NA	Yes	10% to 12.5%	Less than or equal to 2%	Greater than 48 inches	1	19	87
1728	9/4/2015	Sandt DOT	Marlborough.	Main St 101	Parallel	Concrete	Good	Yes	Yes	Yes	No	No	No	Yes	Yes	NA	Yes	10% to 12.5%	Less than or equal to 2%	Greater than 48 inches	1	19	87
67	6/17/2015	Sandt DOT	Allenstown	Main	Diagonal	Concrete	Good	Yes	Yes	Yes	No	No	No	Yes	Yes	Yes	Yes	10% to 12.5%	Less than or equal to 2%	Greater than 48 inches	1	19	87
1514	8/14/2015	Sandt DOT	Francestown	Main Street	Perpendicular	Concrete	Good	Yes	Yes	Yes	No	No	No	Yes	Yes	NA	Yes	10% to 12.5%	Less than or equal to 2%	Greater than 48 inches	1	19	87
79	6/22/2015	Sandt DOT	Hooksett	Main	Perpendicular	Concrete	Good	Yes	Yes	Yes	No	No	No	Yes	Yes	NA	Yes	10% to 12.5%	Less than or equal to 2%	Greater than 48 inches	1	19	87
1741	9/14/2015	Sandt DOT	Charlestown	Rt 12	Perpendicular	Concrete	Good	Yes	Yes	Yes	No	No	No	Yes	Yes	NA	Yes	10% to 12.5%	Less than or equal to 2%	Greater than 48 inches	1	19	87
1742	9/14/2015	Sandt DOT	Charlestown	Rt 12	Perpendicular	Concrete	Good	Yes	Yes	Yes	No	No	No	Yes	Yes	NA	Yes	10% to 12.5%	Less than or equal to 2%	Greater than 48 inches	1	19	87
1421	8/7/2015	Sandt DOT	Goffstown	Main Street	Parallel	Concrete	Good	Yes	Yes	Yes	No	No	No	Yes	Yes	NA	Yes	10% to 12.5%	Less than or equal to 2%	Greater than 48 inches	1	19	87
2795	12/16/2015	Nichols district 1	Littleton	Rte 302	Parallel	Concrete	Good	Yes	Yes	Yes	No	No	No	Yes	NA	NA	Yes	10% to 12.5%	Less than or equal to 2%	Greater than 48 inches	1	19	87

2797	12/16/2015	Nichols district 1	Littleton	Rte 302	Parallel	Concrete	Good	Yes	Yes	Yes	No	No	No	Yes	NA	NA	Yes	10% to 12.5%	Less than or equal to 2%	Greater than 48 inches	1	19	87
2753	12/14/2015	Patch district 1	Littleton	Rte 302	Parallel	Concrete	Good	Yes	Yes	Yes	No	No	No	Yes	Yes	NA	Yes	10% to 12.5%	Less than or equal to 2%	Greater than 48 inches	1	19	87
1676	9/3/2015	Sandt DOT	Swanzey	Sawyer's Crossing	Perpendicular	Concrete	Good	Yes	Yes	Yes	No	No	No	Yes	Yes	NA	Yes	10% to 12.5%	Less than or equal to 2%	Greater than 48 inches	1	19	87
2233	10/22/2015	Sandt DOT	Portsmouth	Pease Blvd	Diagonal	Concrete	Good	No	Yes	Yes	No	No	No	Yes	Yes	Yes	Yes	Less than 8.33%	Less than or equal to 2%	Greater than 48 inches	1	16	89
2234	10/22/2015	Sandt DOT	Portsmouth	Pease Blvd	Diagonal	Asphalt	Good	Yes	Yes	Yes	No	No	No	Yes	Yes	Yes	Yes	8.33% to 10%	Greater than 2%	Greater than 48 inches	1	16	89
2449	11/2/2015	Sandt DOT	Hampton	Ocean Blvd	Perpendicular	Concrete	Good	No	Yes	Yes	No	No	No	Yes	NA	NA	Yes	Less than 8.33%	Less than or equal to 2%	Greater than 48 inches	1	16	89
2450	11/2/2015	Sandt DOT	Hampton	Ocean Blvd	Perpendicular	Concrete	Good	No	Yes	Yes	No	No	No	Yes	NA	NA	Yes	Less than 8.33%	Less than or equal to 2%	Greater than 48 inches	1	16	89
2452	11/2/2015	Sandt DOT	Hampton	Ocean Blvd	Perpendicular	Concrete	Good	No	Yes	Yes	No	No	No	Yes	NA	NA	Yes	Less than 8.33%	Less than or equal to 2%	Greater than 48 inches	1	16	89
2453	11/2/2015	Sandt DOT	Hampton	Ocean Blvd	Perpendicular	Concrete	Good	No	Yes	Yes	No	No	No	Yes	NA	NA	Yes	Less than 8.33%	Less than or equal to 2%	Greater than 48 inches	1	16	89
2454	11/2/2015	Sandt DOT	Hampton	Ocean Blvd	Perpendicular	Concrete	Good	No	Yes	Yes	No	No	No	Yes	NA	NA	Yes	Less than 8.33%	Less than or equal to 2%	Greater than 48 inches	1	16	89
2463	11/2/2015	Sandt DOT	Hampton	Ocean Blvd	Perpendicular	Concrete	Good	No	Yes	Yes	No	No	No	Yes	NA	NA	Yes	Less than 8.33%	Less than or equal to 2%	Greater than 48 inches	1	16	89
114	6/26/2015	MC SWRPC	North Walpole	Church Street	Perpendicular	Concrete	Good	No	Yes	Yes	No	No	No	Yes	Yes	NA	Yes	Less than 8.33%	Less than or equal to 2%	Greater than 48 inches	1	16	89
1912	10/1/2015	Sandt DOT	Rochester	N Main	Parallel	Concrete	Good	No	Yes	Yes	No	No	No	Yes	Yes	NA	Yes	Less than 8.33%	Less than or equal to 2%	Greater than 48 inches	1	16	89
1913	10/1/2015	Sandt DOT	Rochester	N Main	Diagonal	Concrete	Good	No	Yes	Yes	No	No	No	Yes	Yes	Yes	Yes	Less than 8.33%	Less than or equal to 2%	Greater than 48 inches	1	16	89
1914	10/1/2015	Sandt DOT	Rochester	N Main	Diagonal	Concrete	Good	No	Yes	Yes	No	No	No	Yes	Yes	Yes	Yes	Less than 8.33%	Less than or equal to 2%	Greater than 48 inches	1	16	89
1231	7/20/2015	Sandt DOT	Chichester	US 202	Parallel	Concrete	Good	No	Yes	Yes	No	No	No	Yes	Yes	NA	Yes	Less than 8.33%	Less than or equal to 2%	Greater than 48 inches	1	16	89
1232	7/20/2015	Sandt DOT	Chichester	US 202	Parallel	Concrete	Good	No	Yes	Yes	No	No	No	Yes	Yes	NA	Yes	Less than 8.33%	Less than or equal to 2%	Greater than 48 inches	1	16	89
268	7/10/2015	Sandt DOT	Merrimack	Daniel Webster Hwy	Perpendicular	Concrete	Good	No	Yes	Yes	No	No	No	Yes	Yes	NA	Yes	Less than 8.33%	Less than or equal to 2%	Greater than 48 inches	1	16	89
269	7/10/2015	Sandt DOT	Merrimack	Daniel Webster Hwy	Parallel	Concrete	Good	No	Yes	Yes	No	No	No	Yes	Yes	NA	Yes	Less than 8.33%	Less than or equal to 2%	Greater than 48 inches	1	16	89
270	7/10/2015	Sandt DOT	Merrimack	Daniel Webster Hwy	Perpendicular	Concrete	Good	No	Yes	Yes	No	No	No	Yes	Yes	NA	Yes	Less than 8.33%	Less than or equal to 2%	Greater than 48 inches	1	16	89
331	7/14/2015	Sandt DOT	Hudson	Derry Street	Parallel	Concrete	Good	No	Yes	Yes	No	No	No	Yes	Yes	NA	Yes	Less than 8.33%	Less than or equal to 2%	Greater than 48 inches	1	16	89
332	7/14/2015	Sandt DOT	Hudson	Derry Street	Parallel	Concrete	Good	No	Yes	Yes	No	No	No	Yes	Yes	NA	Yes	Less than 8.33%	Less than or equal to 2%	Greater than 48 inches	1	16	89
333	7/14/2015	Sandt DOT	Hudson	Derry Street	Parallel	Concrete	Good	No	Yes	Yes	No	No	No	Yes	Yes	NA	Yes	Less than 8.33%	Less than or equal to 2%	Greater than 48 inches	1	16	89
334	7/14/2015	Sandt DOT	Hudson	Derry Street	Parallel	Concrete	Good	No	Yes	Yes	No	No	No	Yes	Yes	NA	Yes	Less than 8.33%	Less than or equal to 2%	Greater than 48 inches	1	16	89
335	7/14/2015	Sandt DOT	Hudson	Derry Street	Parallel	Concrete	Good	No	Yes	Yes	No	No	No	Yes	Yes	NA	Yes	Less than 8.33%	Less than or equal to 2%	Greater than 48 inches	1	16	89
215	7/7/2015	Sandt DOT	Concord	Foundry Street	Perpendicular	Concrete	Good	No	Yes	Yes	No	No	No	Yes	Yes	NA	Yes	Less than 8.33%	Less than or equal to 2%	Greater than 48 inches	1	16	89
216	7/7/2015	Sandt DOT	Concord	Foundry Street	Perpendicular	Concrete	Good	No	Yes	Yes	No	No	No	Yes	Yes	NA	Yes	Less than 8.33%	Less than or equal to 2%	Greater than 48 inches	1	16	89
219	7/7/2015	Sandt DOT	Concord	Foundry Street	Perpendicular	Concrete	Good	No	Yes	Yes	No	No	No	Yes	Yes	NA	Yes	Less than 8.33%	Less than or equal to 2%	Greater than 48 inches	1	16	89
83	6/22/2015	Sandt DOT	Hooksett	Northbound rest area Hooksett	Perpendicular	Concrete	Good	No	Yes	Yes	No	No	No	Yes	Yes	NA	Yes	Less than 8.33%	Less than or equal to 2%	Greater than 48 inches	1	16	89
88	6/22/2015	Sandt DOT	Hooksett	Hooksett rest area southbound	Perpendicular	Concrete	Good	No	Yes	Yes	No	No	No	Yes	Yes	NA	Yes	Less than 8.33%	Less than or equal to 2%	Greater than 48 inches	1	16	89
2972	1/26/2016	Wilkinson District 1	Conway	Rte. 16 and 302	Parallel	Concrete	Good	No	Yes	Yes	No	No	No	Yes	Yes	NA	Yes	Less than 8.33%	Less than or equal to 2%	Greater than 48 inches	1	16	89
2951	1/11/2016	Sandt DOT	Sandt DOT	Rt 3	Parallel	Concrete	Good	No	Yes	Yes	No	No	No	Yes	NA	NA	Yes	Less than 8.33%	Less than or equal to 2%	Greater than 48 inches	1	16	89
2910	1/7/2016	Nichols district 1	Woodsville	Rte 302	Parallel	Concrete	Good	No	Yes	Yes	No	No	No	Yes	NA	NA	Yes	Less than 8.33%	Less than or equal to 2%	Greater than 48 inches	1	16	89
2912	1/7/2016	Wilkinson District 1	Woodstock	Rte. 112	Parallel	Concrete	Good	No	Yes	Yes	No	No	No	Yes	NA	NA	Yes	Less than 8.33%	Less than or equal to 2%	Greater than 48 inches	1	16	89
2841	12/23/2015	Sandt DOT	Tilton	Rt 3	Parallel	Concrete	Good	No	Yes	Yes	No	No	No	Yes	NA	NA	Yes	Less than 8.33%	Less than or equal to 2%	Greater than 48 inches	1	16	89
2843	12/23/2015	Sandt DOT	Tilton	Rt 3	Parallel	Concrete	Good	No	Yes	Yes	No	No	No	Yes	NA	NA	Yes	Less than 8.33%	Less than or equal to 2%	Greater than 48 inches	1	16	89
2844	12/23/2015	Sandt DOT	Tilton	Rt 3	Parallel	Concrete	Good	No	Yes	Yes	No	No	No	Yes	NA	NA	Yes	Less than 8.33%	Less than or equal to 2%	Greater than 48 inches	1	16	89
2845	12/23/2015	Sandt DOT	Tilton	Rt 3	Parallel	Concrete	Good	No	Yes	Yes	No	No	No	Yes	NA	NA	Yes	Less than 8.33%	Less than or equal to 2%	Greater than 48 inches	1	16	89
2846	12/23/2015	Sandt DOT	Tilton	Rt 3	Perpendicular	Concrete	Good	No	Yes	Yes	No	No	No	Yes	NA	NA	Yes	Less than 8.33%	Less than or equal to 2%	Greater than 48 inches	1	16	89
2847	12/23/2015	Sandt DOT	Tilton	Rt 3	Perpendicular	Concrete	Good	No	Yes	Yes	No	No	No	Yes	NA	NA	Yes	Less than 8.33%	Less than or equal to 2%	Greater than 48 inches	1	16	89
2848	12/23/2015	Sandt DOT	Tilton	Rt 3	Parallel	Concrete	Good	No	Yes	Yes	No	No	No	Yes	NA	NA	Yes	Less than 8.33%	Less than or equal to 2%	Greater than 48 inches	1	16	89
2849	12/23/2015	Sandt DOT	Tilton	Rt 3	Parallel	Concrete	Good	No	Yes	Yes	No	No	No	Yes	NA	NA	Yes	Less than 8.33%	Less than or equal to 2%	Greater than 48 inches	1	16	89
2852	12/23/2015	Sandt DOT	Tilton	Rt 3	Parallel	Concrete	Good	No	Yes	Yes	No	No	No	Yes	NA	NA	Yes	Less than 8.33%	Less than or equal to 2%	Greater than 48 inches	1	16	89
2853	12/23/2015	Sandt DOT	Tilton	Rt 3	Parallel	Concrete	Good	No	Yes	Yes	No	No	No	Yes	NA	NA	Yes	Less than 8.33%	Less than or equal to 2%	Greater than 48 inches	1	16	89
2854	12/23/2015	Sandt DOT	Tilton	Rt 3	Parallel	Concrete	Good	No	Yes	Yes	No	No	No	Yes	NA	NA	Yes	Less than 8.33%	Less than or equal to 2%	Greater than 48 inches	1	16	89
2855	12/23/2015	Sandt DOT	Tilton	Rt 3	Parallel	Concrete	Good	No	Yes	Yes	No	No	No	Yes	NA	NA	Yes	Less than 8.33%	Less than or equal to 2%	Greater than 48 inches	1	16	89
2857	12/23/2015	Sandt DOT	Tilton	Rt 3	Parallel	Concrete	Good	No	Yes	Yes	No	No	No	Yes	NA	NA	Yes	Less than 8.33%	Less than or equal to 2%	Greater than 48 inches	1	16	89
2858	12/23/2015	Sandt DOT	Tilton	Rt 3	Parallel	Concrete	Good	No	Yes	Yes	No	No	No	Yes	NA	NA	Yes	Less than 8.33%	Less than or equal to 2%	Greater than 48 inches	1	16	89
2814	12/17/2015	Wilkinson District 1	Warren	Rte.118	Perpendicular	Concrete	Good	No	Yes	Yes	No	No	No	Yes	NA	NA	Yes	Less than 8.33%	Less than or equal to 2%	Greater than 48 inches	1	16	89
2806	12/16/2015	Sandt DOT	Tilton	Rt 3	Perpendicular	Concrete	Good	No	Yes	Yes	No	No	No	Yes	NA	NA	Yes	Less than 8.33%	Less than or equal to 2%	Greater than 48 inches	1	16	89
2734	12/10/2015	Sandt DOT	Laconia	Rt 3	Diagonal	Concrete	Good	No	Yes	Yes	No	No	No	Yes	NA	NA	Yes	Less than 8.33%	Less than or equal to 2%	Greater than 48 inches	1	16	89
2735	12/10/2015	Sandt DOT	Laconia	Rt 3	Diagonal	Concrete	Good	No	Yes	Yes	No	No	No	Yes	NA	NA	Yes	Less than 8.33%	Less than or equal to 2%	Greater than 48 inches	1	16	89
2740	12/10/2015	Sandt DOT	Laconia	Rt 3	Diagonal	Concrete	Good	No	Yes	Yes	No	No	No	Yes	NA	NA	Yes	Less than 8.33%	Less than or equal to 2%	Greater than 48 inches	1	16	89
2699	12/9/2015	Sandt DOT	Mont Vernon	Rt 13	Parallel	Concrete	Good	No	Yes	Yes	No	No	No	Yes	NA	NA	Yes	Less than 8.33%	Less than or equal to 2%	Greater than 48 inches	1	16	89
2703	12/9/2015	Sandt DOT	Mont Vernon	Rt 13	Parallel	Concrete	Good	No	Yes	Yes	No	No	No	Yes	NA	NA	Yes	Less than 8.33%	Less than or equal to 2%	Greater than 48 inches	1	16	89
2704	12/9/2015	Sandt DOT	Mont Vernon	Rt 13	Parallel	Concrete	Good	No	Yes	Yes	No	No	No	Yes	NA	NA	Yes	Less than 8.33%	Less than or equal to 2%	Greater than 48 inches	1	16	89
2709	12/9/2015	Sandt DOT	Mont Vernon	Rt 13	Parallel	Concrete	Good	No	Yes	Yes	No	No	No	Yes	NA	NA	Yes	Less than 8.33%	Less than or equal to 2%	Greater than 48 inches	1	16	89
2710	12/9/2015	Sandt DOT	Mont Vernon	Rt 13	Parallel	Concrete	Good	No	Yes	Yes	No	No	No	Yes	NA	NA	Yes	Less than 8.33%	Less than or equal to 2%	Greater than 48 inches	1	16	89
2663	12/7/2015	Wilkinson District 1	Jefferson	Rte. 2	Parallel	Concrete	Good	No	Yes	Yes	No	No	No	Yes	NA	NA	Yes	Less than 8.33%	Less than or equal to 2%	Greater than 48 inches	1	16	89
2563	11/25/2015	Sandt DOT	Alton	Rt 11	Parallel	Concrete	Good	No	Yes	Yes	No	No	No	Yes	NA	NA	Yes	Less than 8.33%	Less than or equal to 2%	Greater than 48 inches	1	16	89
2564	11/25/2015	Sandt DOT	Alton	Rt 11	Parallel	Concrete	Good	No	Yes	Yes	No	No	No	Yes	NA	NA	Yes	Less than 8.33%	Less than or equal to 2%	Greater than 48 inches	1	16	89
2565	11/25/2015	Sandt DOT	Alton	Rt 11	Parallel	Concrete	Good	No	Yes	Yes	No	No	No	Yes	NA	NA	Yes	Less than 8.33%	Less than or equal to 2%	Greater than 48 inches	1	16	89
2566	11/25/2015	Sandt DOT	Alton	Rt 11	Parallel	Concrete	Good	No	Yes	Yes	No	No	No	Yes	NA	NA	Yes	Less than 8.33%	Less than or equal to 2%	Greater than 48 inches	1	16	89
2567	11/25/2015	Sandt DOT	Alton	Rt 11	Parallel	Concrete	Good	No	Yes	Yes	No	No	No	Yes	NA	NA	Yes	Less than 8.33%	Less than or equal to 2%	Greater than 48 inches	1	16	89
2568	11/25/2015	Sandt DOT	Alton	Rt 11	Perpendicular	Concrete	Good	No	Yes	Yes	No	No	No	Yes	NA	NA	Yes	Less than 8.33%	Less than or equal to 2%	Greater than 48 inches	1	16	89
2569	11/25/2015	Sandt DOT	Alton	Rt 11	Diagonal	Concrete	Good	No	Yes	Yes	No	No	No	Yes	NA	NA	Yes	Less than 8.33%	Less than or equal to 2%	Greater than 48 inches	1	16	89
2583	11/25/2015	Sandt DOT	Alton	Rt 11	Parallel	Concrete	Good	No	Yes	Yes	No	No	No	Yes	NA	NA	Yes	Less than 8.33%	Less than or equal to 2%	Greater than 48 inches	1	16	89
2632	11/10/2015	Sandt DOT	Hampton	Rt 1	Parallel	Concrete	Good	No	Yes	Yes	No	No	No	Yes	NA	NA	Yes	Less than 8.33%	Less than or equal to 2%	Greater than 48 inches	1	16	89
2633	11/10/2015	Sandt DOT	Hampton	Rt 1	Parallel	Concrete	Good	No	Yes	Yes	No	No	No	Yes	NA	NA	Yes	Less than 8.33%	Less than or equal to 2%	Greater than 48 inches	1	16	89
2634	11/10/2015	Sandt DOT	Hampton	Rt 1	Parallel	Concrete	Good	No	Yes	Yes	No	No	No	Yes	NA	NA	Yes	Less than 8.33%	Less than or equal to 2%	Greater than 48 inches	1	16	89
4087	3/15/2016	Sandt DOT	Salem	Salem Park n Ride	Diagonal	Concrete	Good	No	Yes	Yes	No	No	No	Yes	Yes	NA	Yes	Less than 8.33%	Less than or equal to 2%	Greater than 48 inches	1	16	89
4112	3/17/2016	Wilkinson District 1	Lincoln	Rte. 112	Parallel	Concrete	Good	No	Yes	Yes	No	No	No	Yes	NA	NA	Yes	Less than 8.33%	Less than or equal to 2%	Greater than 48 inches	1	16	89
1519	8/14/2015	Sandt DOT	Hillsborough	W Main Street	Perpendicular	Concrete	Good	Yes	Yes	Yes	No	No	No	Yes	Yes	NA	Yes	8.33% to 10%	Less than or equal to 2%	Greater than 48 inches	1	14	90
1520	8/14/2015	Sandt DOT	Hillsborough	W Main Street	Perpendicular	Concrete	Good	Yes	Yes	Yes	No	No	No	Yes	Yes	NA	Yes	8.33% to 10%	Less than or equal to 2%	Greater than 48 inches	1	14	90
2808	12/16/2015	Wilkinson District 1	Littleton	Rte. 302	Perpendicular	Concrete	Good	Yes	Yes	Yes	No	No	No	Yes	Yes	Yes	Yes	Less than 8.33%	Greater than 2%	36 to 48 inches	1	14	90
1727	9/4/2015	Sandt DOT	Marlborough.	Main St 101	Diagonal	Concrete	Good	Yes	Yes	Yes	No	No	No	Yes	Yes	NA	Yes	8.33% to 10%	Less than or equal to 2%	Greater than 48 inches	1	14	90
1729	9/4/2015	Sandt DOT	Marlborough.	Main St 101	Perpendicular	Concrete	Good	Yes	Yes	Yes	No	No	No	Yes	Yes	NA	Yes	8.33% to 10%	Less than or equal to 2%	Greater than 48 inches	1	14	90
1730	9/4/2015	Sandt DOT	Marlborough.	Main St 101	Diagonal	Concrete	Good	Yes	Yes	Yes	No	No	No	Yes	Yes	NA	Yes	8.33% to 10%	Less than or equal to 2%	Greater than 48 inches	1	14	90
1732	9/4/2015	Sandt DOT	Marlborough.	Main St 101	Diagonal	Concrete	Good	Yes	Yes	Yes	No	No	No	Yes	Yes	NA	Yes	8.33% to 10%	Less than or equal to 2%	Greater than 48 inches	1	14	90
1733	9/4/2015	Sandt DOT	Marlborough.	Main St 101	Diagonal	Concrete	Good	Yes	Yes	Yes	No	No	No	Yes	Yes	NA	Yes	8.33% to 10%	Less than or equal to 2%	Greater than 48 inches	1	14	90
1615	8/27/2015	Sandt DOT	Jaffrey	Main Street	Perpendicular	Concrete	Good	Yes	Yes	Yes	No	No	No	Yes	Yes	Yes	Yes	8.33% to 10%	Less than or equal to 2%	Greater than 48 inches	1	14	90
1616	8/27/2015	Sandt DOT	Jaffrey	Main Street	Perpendicular	Concrete	Good	Yes	Yes	Yes	No	No	No	Yes	Yes	Yes	Yes	8.33% to 10%	Less than or equal to 2%	Greater than 48 inches	1	14	90
1617	8/27/2015	Sandt DOT	Jaffrey	Main Street	Parallel	Concrete	Good	Yes	Yes	Yes	No	No	No	Yes	Yes	Yes	Yes	8.33% to 10%	Less than or equal to 2%	Greater than 48 inches	1	14	90
1618	8/27/2015	Sandt DOT	Jaffrey	Main Street	Parallel	Concrete	Good	Yes	Yes	Yes	No	No	No	Yes	Yes	Yes	Yes	8.33% to 10%	Less than or equal to 2%	Greater than 48 inches	1	14	90
2168	10/19/2015	Sandt DOT	Concord	South Street	Parallel	Concrete	Good	Yes	Yes	Yes	No	No	No	Yes	Yes	NA	Yes	8.33% to 10%	Less than or equal to 2%	Greater than 48 inches	1	14	90
2169	10/19/2015	Sandt DOT	Concord	South Street	Parallel	Concrete	Good	Yes	Yes	Yes	No	No	No	Yes	Yes	NA	Yes	8.33% to 10%	Less than or equal to 2%	Greater than 48 inches	1	14	90
1496	8/12/2015	Sandt DOT	Amherst	101A	Parallel	Concrete	Good	Yes	Yes	Yes	No	No	No	Yes	Yes	NA	Yes	8.33% to 10%	Less than or equal to 2%	Greater than 48 inches	1	14	90
50	6/16/2015	Sandt DOT	Pembroke	Broadway	Parallel	Concrete	Good	Yes	Yes	Yes	No	No	No	Yes	Yes	NA	Yes	8.33% to 10%	Less than or equal to 2%	Greater than 48 inches	1	14	90
1892	9/29/2015	Sandt DOT	Durham	Main Street	Diagonal	Concrete	Good	Yes	Yes	Yes	No	No	No	Yes	Yes	Yes	Yes	8.33% to 10%	Less than or equal to 2%	Greater than 48 inches	1	14	90
373	7/16/2015	Sandt DOT	Windham	111	Diagonal	Concrete	Fair	Yes	Yes	Yes	No	No	No	Yes	Yes	NA	Yes	Less than 8.33%	Less than or equal to 2%	Greater than 48 inches	1	14	90
4017	2/9/2016	Wilkinson District 1	Conway	Rtes. 16 & 302	Perpendicular	Concrete	Fair	Yes	Yes	Yes	No	No	No	Yes	Yes	NA	Yes	Less than 8.33%	Less than or equal to 2%	Greater than 48 inches	1	14	90
3016	2/8/2016	Wilkinson District 1	Conway	Rtes. 16 & 302	Perpendicular	Concrete	Fair	Yes	Yes	Yes	No	No	No	Yes	Yes	NA	Yes	Less than 8.33%	Less than or equal to 2%	Greater than 48 inches	1	14	90
2964	1/25/2016	Wilkinson District 1	Conway	Rte. 302	Parallel	Concrete	Good	Yes	Yes	Yes	No	No	No	Yes	Yes	NA	Yes	8.33% to 10%	Less than or equal to 2%	Greater than 48 inches	1	14	90
2965	1/25/2016	Wilkinson District 1	Conway	Rte. 302	Perpendicular	Concrete	Good	Yes	Yes	Yes	No	No	No	Yes	Yes	NA	Yes	8.33% to 10%	Less than or equal to 2%	Greater than 48 inches	1	14	90
2642	12/3/2015	Sandt DOT	Holderness	Bridge Street	Diagonal	Concrete	Good	Yes	Yes	Yes	No	No	No	Yes	Yes	NA	Yes	8.33% to 10%	Less than or equal to 2%	Greater than 48 inches	1	14	90
2559	11/25/2015	Sandt DOT	Alton	Mount Major Hwy	Perpendicular	Concrete	Fair	Yes	Yes	Yes	No	No	No	Yes	Yes	NA	Yes	Less than 8.33%	Less than or equal to 2%	Greater than 48 inches	1	14	90
228	7/9/2015	Sandt DOT	Bedford	S River Road	Perpendicular	Concrete	Good	Yes	Yes	Yes	No	No	No	Yes	Yes	Yes	Yes	Less than 8.33%	Less than or equal to 2%	Less than 36 inches	1	14	90
164	7/2/2015	Sandt DOT	Manch	Hanover Street	Diagonal	Concrete	Good	Yes	Yes	Yes	No	No	No	Yes	Yes	Yes	Yes	Less than 8.33%	Less than or equal to 2%	Less than 36 inches	1	14	90
1677	9/3/2015	Sandt DOT	Swanzey	Sawyer's Crossing	Perpendicular	Concrete	Good	Yes	Yes	Yes	No	No	No	Yes	Yes	NA	Yes	8.33% to 10%	Less than or equal to 2%	Greater than 48 inches	1	14	90
4098	3/16/2016	Sandt DOT	Plaistow	Rt 125	Perpendicular	Concrete	Fair	Yes	Yes	Yes	No	No	No	Yes	Yes	NA	Yes	Less than 8.33%	Less than or equal to 2%	Greater than 48 inches	1	14	90
2778	12/16/2015	Nichols district 1	Littleton	Rte 302	Diagonal	Concrete	Good	Yes	Yes	Yes	No	Yes	No	Yes	NA	NA	Yes	Less than 8.33%	Greater than 2%	Greater than 48 inches	1	13	91
2793	12/16/2015	Nichols district 1	Littleton	Rte 302	Diagonal	Concrete	Good	Yes	Yes	Yes	No	Yes	No	Yes	NA	NA	Yes	Less than 8.33%	Greater than 2%	Greater than 48 inches	1	13	91
2819	12/17/2015	Nichols district 1	Lisbon	Rte 302	Parallel	Asphalt	Good	No	Yes	Yes	No	No	No	Yes	NA	NA	Yes	Less than 8.33%	Less than or equal to 2%	Greater than 48 inches	1	12	92
4079	3/11/2016	Sandt DOT	Londonderry	Exit 5 Park n Ride	Perpendicular	Asphalt	Good	No	Yes	Yes	No	No	No	Yes	Yes	Yes	Yes	Less than 8.33%	Less than or equal to 2%	Greater than 48 inches	1	12	92
4080	3/11/2016	Sandt DOT	Londonderry	Exit 5 Park n Ride	Perpendicular	Asphalt	Good	No	Yes	Yes	No	No	No	Yes	Yes	Yes	Yes	Less than 8.33%	Less than or equal to 2%	Greater than 48 inches	1	12	92
1768	9/17/2015	Sandt DOT	Newport	Rt 10	Diagonal	Concrete	Good	Yes	Yes	Yes	No	No	No	Yes	Yes	Yes	Yes	Less than 8.33%	Greater than 2%	Greater than 48 inches	1	10	93
1769	9/17/2015	Sandt DOT	Newport	Rt 10	Diagonal	Concrete	Good	Yes	Yes	Yes	No	No	No	Yes	Yes	Yes	Yes	Less than 8.33%	Greater than 2%	Greater than 48 inches	1	10	93
1770	9/17/2015	Sandt DOT	Newport	Rt 10	Diagonal	Concrete	Good	Yes	Yes	Yes	No	No	No	Yes	Yes	Yes	Yes	Less than 8.33%	Greater than 2%	Greater than 48 inches	1	10	93
1980	10/5/2015	Sandt DOT	Rochester	Gonic Road	Diagonal	Concrete	Good	Yes	Yes	Yes	No	No	No	Yes	Yes	Yes	Yes	Less than 8.33%	Greater than 2%	Greater than 48 inches	1	10	93
1731	9/4/2015	Sandt DOT	Marlborough.	Main St 101	Parallel	Concrete	Good	Yes	Yes	Yes	No	No	No	Yes	Yes	NA	Yes	Less than 8.33%	Greater than 2%	Greater than 48 inches	1	10	93
1600	8/26/2015	Sandt DOT	Concord	South Street	Diagonal	Concrete	Good	Yes	Yes	Yes	No	No	No	Yes	Yes	Yes	Yes	Less than 8.33%	Greater than 2%	Greater than 48 inches	1	10	93
1517	8/14/2015	Sandt DOT	Hillsborough	W Main Street	Diagonal	Concrete	Good	Yes	Yes	Yes	No	No	No	Yes	Yes	Yes	Yes	Less than 8.33%	Greater than 2%	Greater than 48 inches	1	10	93
1588	8/24/2015	Sandt DOT	Jaffrey	Main Street	Perpendicular	Concrete	Good	Yes	Yes	Yes	No	No	No	Yes	Yes	NA	Yes	Less than 8.33%	Greater than 2%	Greater than 48 inches	1	10	93

1590	8/24/2015	Sandt DOT	Jaffrey	Main Street	Diagonal	Concrete	Good	Yes	Yes	Yes	No	No	No	Yes	Yes	Yes	Yes	Less than 8.33%	Greater than 2%	Greater than 48 inches	1	10	93
1537	8/17/2015	Sandt DOT	Bennington	Main Street	Perpendicular	Concrete	Good	Yes	Yes	Yes	No	No	No	Yes	Yes	NA	Yes	Less than 8.33%	Greater than 2%	Greater than 48 inches	1	10	93
1538	8/17/2015	Sandt DOT	Bennington	Main Street	Perpendicular	Concrete	Good	Yes	Yes	Yes	No	No	No	Yes	Yes	NA	Yes	Less than 8.33%	Greater than 2%	Greater than 48 inches	1	10	93
1622	8/28/2015	Sandt DOT	Troy	South Main	Perpendicular	Concrete	Good	Yes	Yes	Yes	No	No	No	Yes	Yes	NA	Yes	Less than 8.33%	Greater than 2%	Greater than 48 inches	1	10	93
1558	8/18/2015	Sandt DOT	Greenfield	Forest	Perpendicular	Concrete	Good	Yes	Yes	Yes	No	No	No	Yes	Yes	NA	Yes	Less than 8.33%	Greater than 2%	Greater than 48 inches	1	10	93
1546	8/17/2015	Sandt DOT	Bennington	Main Street	Perpendicular	Concrete	Good	Yes	Yes	Yes	No	No	No	Yes	Yes	NA	Yes	Less than 8.33%	Greater than 2%	Greater than 48 inches	1	10	93
1547	8/17/2015	Sandt DOT	Bennington	Main Street	Perpendicular	Concrete	Good	Yes	Yes	Yes	No	No	No	Yes	Yes	NA	Yes	Less than 8.33%	Greater than 2%	Greater than 48 inches	1	10	93
1548	8/17/2015	Sandt DOT	Bennington	Main Street	Perpendicular	Concrete	Good	Yes	Yes	Yes	No	No	No	Yes	Yes	NA	Yes	Less than 8.33%	Greater than 2%	Greater than 48 inches	1	10	93
1549	8/17/2015	Sandt DOT	Bennington	Main Street	Perpendicular	Concrete	Good	Yes	Yes	Yes	No	No	No	Yes	Yes	NA	Yes	Less than 8.33%	Greater than 2%	Greater than 48 inches	1	10	93
1550	8/17/2015	Sandt DOT	Bennington	Main Street	Perpendicular	Concrete	Good	Yes	Yes	Yes	No	No	No	Yes	Yes	NA	Yes	Less than 8.33%	Greater than 2%	Greater than 48 inches	1	10	93
2269	10/23/2015	Sandt DOT	Newmarket	Main	Parallel	Concrete	Good	Yes	Yes	Yes	No	No	No	Yes	Yes	NA	Yes	Less than 8.33%	Greater than 2%	Greater than 48 inches	1	10	93
2263	10/23/2015	Sandt DOT	Newmarket	Main	Perpendicular	Concrete	Good	Yes	Yes	Yes	No	No	No	Yes	Yes	NA	Yes	Less than 8.33%	Greater than 2%	Greater than 48 inches	1	10	93
2264	10/23/2015	Sandt DOT	Newmarket	Main	Perpendicular	Concrete	Good	Yes	Yes	Yes	No	No	No	Yes	Yes	NA	Yes	Less than 8.33%	Greater than 2%	Greater than 48 inches	1	10	93
2014	10/5/2015	Sandt DOT	Rollinsford	Front	Parallel	Concrete	Good	Yes	Yes	Yes	No	No	No	Yes	Yes	NA	Yes	Less than 8.33%	Greater than 2%	Greater than 48 inches	1	10	93
1587	8/24/2015	Sandt DOT	Jaffrey	Main Street	Diagonal	Concrete	Good	Yes	Yes	Yes	No	No	No	Yes	Yes	Yes	Yes	Less than 8.33%	Greater than 2%	Greater than 48 inches	1	10	93
2667	12/7/2015	Sandt DOT	New Hampton	132	Perpendicular	Asphalt	Good	Yes	Yes	Yes	No	No	No	Yes	Yes	NA	Yes	8.33% to 10%	Less than or equal to 2%	Greater than 48 inches	1	10	93
4027	2/22/2016	Sandt DOT	Meredith	Rt 3	Perpendicular	Concrete	Good	Yes	Yes	Yes	No	No	No	Yes	Yes	NA	Yes	Less than 8.33%	Greater than 2%	Greater than 48 inches	1	10	93
4028	2/22/2016	Sandt DOT	Meredith	Rt 3	Perpendicular	Concrete	Good	Yes	Yes	Yes	No	No	No	Yes	Yes	NA	Yes	Less than 8.33%	Greater than 2%	Greater than 48 inches	1	10	93
4029	2/22/2016	Sandt DOT	Meredith	Rt 3	Perpendicular	Concrete	Good	Yes	Yes	Yes	No	No	No	Yes	Yes	NA	Yes	Less than 8.33%	Greater than 2%	Greater than 48 inches	1	10	93
4033	2/22/2016	Sandt DOT	Meredith	Rt 3	Perpendicular	Concrete	Good	Yes	Yes	Yes	No	No	No	Yes	Yes	NA	Yes	Less than 8.33%	Greater than 2%	Greater than 48 inches	1	10	93
4034	2/22/2016	Sandt DOT	Meredith	Rt 3	Perpendicular	Concrete	Good	Yes	Yes	Yes	No	No	No	Yes	Yes	NA	Yes	Less than 8.33%	Greater than 2%	Greater than 48 inches	1	10	93
4035	2/22/2016	Sandt DOT	Meredith	Rt 3	Perpendicular	Concrete	Good	Yes	Yes	Yes	No	No	No	Yes	Yes	NA	Yes	Less than 8.33%	Greater than 2%	Greater than 48 inches	1	10	93
4036	2/22/2016	Sandt DOT	Meredith	Rt 3	Perpendicular	Concrete	Good	Yes	Yes	Yes	No	No	No	Yes	Yes	NA	Yes	Less than 8.33%	Greater than 2%	Greater than 48 inches	1	10	93
4038	2/22/2016	Sandt DOT	Meredith	Rt 3	Perpendicular	Concrete	Good	Yes	Yes	Yes	No	No	No	Yes	Yes	NA	Yes	Less than 8.33%	Greater than 2%	Greater than 48 inches	1	10	93
3017	2/9/2016	Wilkinson District 1	Conway	Rtes. 16 & 302	Parallel	Concrete	Good	Yes	Yes	Yes	No	No	No	Yes	Yes	NA	Yes	Less than 8.33%	Greater than 2%	Greater than 48 inches	1	10	93
2955	1/11/2016	Wilkinson District 1	Woodstock	Rte. 112	Parallel	Concrete	Good	Yes	Yes	Yes	No	No	No	Yes	Yes	NA	Yes	Less than 8.33%	Greater than 2%	Greater than 48 inches	1	10	93
2909	1/7/2016	Nichols district 1	Woodsville	Rte 302	Parallel	Concrete	Good	Yes	Yes	Yes	No	No	No	Yes	NA	NA	Yes	Less than 8.33%	Greater than 2%	Greater than 48 inches	1	10	93
2894	1/5/2016	Sandt DOT	Belmont	Rt 140	Diagonal	Concrete	Good	Yes	Yes	Yes	No	No	No	Yes	Yes	Yes	Yes	Less than 8.33%	Greater than 2%	Greater than 48 inches	1	10	93
2895	1/5/2016	Sandt DOT	Belmont	Rt 140	Diagonal	Concrete	Good	Yes	Yes	Yes	No	No	No	Yes	Yes	Yes	Yes	Less than 8.33%	Greater than 2%	Greater than 48 inches	1	10	93
2883	1/4/2016	Sandt DOT	Belmont	Daniel Webster Hwy	Parallel	Concrete	Good	Yes	Yes	Yes	No	No	No	Yes	Yes	NA	Yes	Less than 8.33%	Greater than 2%	Greater than 48 inches	1	10	93
2884	1/4/2016	Sandt DOT	Belmont	Daniel Webster Hwy	Parallel	Concrete	Good	Yes	Yes	Yes	No	No	No	Yes	Yes	NA	Yes	Less than 8.33%	Greater than 2%	Greater than 48 inches	1	10	93
2885	1/4/2016	Sandt DOT	Belmont	Daniel Webster Hwy	Parallel	Concrete	Good	Yes	Yes	Yes	No	No	No	Yes	Yes	NA	Yes	Less than 8.33%	Greater than 2%	Greater than 48 inches	1	10	93
2773	12/16/2015	Nichols district 1	Littleton	Rte 302	Parallel	Concrete	Good	Yes	Yes	Yes	No	No	No	Yes	NA	NA	Yes	Less than 8.33%	Greater than 2%	Greater than 48 inches	1	10	93
2777	12/16/2015	Nichols district 1	Littleton	Rte 302	Parallel	Concrete	Good	Yes	Yes	Yes	No	No	No	Yes	NA	NA	Yes	Less than 8.33%	Greater than 2%	Greater than 48 inches	1	10	93
2779	12/16/2015	Nichols district 1	Littleton	Rte 302	Parallel	Concrete	Good	Yes	Yes	Yes	No	No	No	Yes	NA	NA	Yes	Less than 8.33%	Greater than 2%	Greater than 48 inches	1	10	93
2781	12/16/2015	Nichols district 1	Littleton	Rte 302	Parallel	Concrete	Good	Yes	Yes	Yes	No	No	No	Yes	NA	NA	Yes	Less than 8.33%	Greater than 2%	Greater than 48 inches	1	10	93
2787	12/16/2015	Nichols district 1	Littleton	Rte 302	Parallel	Concrete	Good	Yes	Yes	Yes	No	No	No	Yes	NA	NA	Yes	Less than 8.33%	Greater than 2%	Greater than 48 inches	1	10	93
2791	12/16/2015	Nichols district 1	Littleton	Rte 302	Parallel	Concrete	Good	Yes	Yes	Yes	No	No	No	Yes	NA	NA	Yes	Less than 8.33%	Greater than 2%	Greater than 48 inches	1	10	93
2792	12/16/2015	Nichols district 1	Littleton	Rte 302	Parallel	Concrete	Good	Yes	Yes	Yes	No	No	No	Yes	NA	NA	Yes	Less than 8.33%	Greater than 2%	Greater than 48 inches	1	10	93
2804	12/16/2015	Sandt DOT	Tilton	Rt 3	Parallel	Concrete	Good	Yes	Yes	Yes	No	No	No	Yes	Yes	NA	Yes	Less than 8.33%	Greater than 2%	Greater than 48 inches	1	10	93
2811	12/16/2015	Wilkinson District 1	Littleton	Rte. 302	Parallel	Concrete	Good	Yes	Yes	Yes	No	No	No	Yes	Yes	NA	Yes	Less than 8.33%	Greater than 2%	Greater than 48 inches	1	10	93
2748	12/14/2015	Patch district 1	Littleton	Rte 302	Perpendicular	Concrete	Good	Yes	Yes	Yes	No	No	No	Yes	Yes	NA	Yes	Less than 8.33%	Greater than 2%	Greater than 48 inches	1	10	93
2749	12/14/2015	Patch district 1	Littleton	Rte 302	Perpendicular	Concrete	Good	Yes	Yes	Yes	No	No	No	Yes	Yes	NA	Yes	Less than 8.33%	Greater than 2%	Greater than 48 inches	1	10	93
2756	12/14/2015	Patch district 1	Littleton	Rte 302	Parallel	Concrete	Good	Yes	Yes	Yes	No	No	No	Yes	Yes	NA	Yes	Less than 8.33%	Greater than 2%	Greater than 48 inches	1	10	93
2757	12/14/2015	Patch district 1	Littleton	Rte 302	Parallel	Concrete	Good	Yes	Yes	Yes	No	No	No	Yes	Yes	NA	Yes	Less than 8.33%	Greater than 2%	Greater than 48 inches	1	10	93
2721	12/10/2015	Sandt DOT	Laconia	Rt 3	Perpendicular	Concrete	Good	Yes	Yes	Yes	No	No	No	Yes	Yes	NA	Yes	Less than 8.33%	Greater than 2%	Greater than 48 inches	1	10	93
2722	12/10/2015	Sandt DOT	Laconia	Rt 3	Perpendicular	Concrete	Good	Yes	Yes	Yes	No	No	No	Yes	Yes	NA	Yes	Less than 8.33%	Greater than 2%	Greater than 48 inches	1	10	93
2723	12/10/2015	Sandt DOT	Laconia	Rt 3	Perpendicular	Concrete	Good	Yes	Yes	Yes	No	No	No	Yes	Yes	NA	Yes	Less than 8.33%	Greater than 2%	Greater than 48 inches	1	10	93
2724	12/10/2015	Sandt DOT	Laconia	Rt 3	Perpendicular	Concrete	Good	Yes	Yes	Yes	No	No	No	Yes	Yes	NA	Yes	Less than 8.33%	Greater than 2%	Greater than 48 inches	1	10	93
2726	12/10/2015	Sandt DOT	Laconia	Rt 3	Parallel	Concrete	Good	Yes	Yes	Yes	No	No	No	Yes	Yes	NA	Yes	Less than 8.33%	Greater than 2%	Greater than 48 inches	1	10	93
2727	12/10/2015	Sandt DOT	Laconia	Rt 3	Perpendicular	Concrete	Good	Yes	Yes	Yes	No	No	No	Yes	Yes	NA	Yes	Less than 8.33%	Greater than 2%	Greater than 48 inches	1	10	93
2728	12/10/2015	Sandt DOT	Laconia	Rt 3	Perpendicular	Concrete	Good	Yes	Yes	Yes	No	No	No	Yes	Yes	NA	Yes	Less than 8.33%	Greater than 2%	Greater than 48 inches	1	10	93
2732	12/10/2015	Sandt DOT	Laconia	Rt 3	Parallel	Concrete	Good	Yes	Yes	Yes	No	No	No	Yes	Yes	NA	Yes	Less than 8.33%	Greater than 2%	Greater than 48 inches	1	10	93
2655	12/4/2015	Sandt DOT	Plymouth	Bridge Street	Perpendicular	Concrete	Good	Yes	Yes	Yes	No	No	No	Yes	Yes	NA	Yes	Less than 8.33%	Greater than 2%	Greater than 48 inches	1	10	93
2656	12/4/2015	Sandt DOT	Plymouth	Bridge Street	Perpendicular	Concrete	Good	Yes	Yes	Yes	No	No	No	Yes	Yes	NA	Yes	Less than 8.33%	Greater than 2%	Greater than 48 inches	1	10	93
2657	12/4/2015	Sandt DOT	Plymouth	Bridge Street	Perpendicular	Concrete	Good	Yes	Yes	Yes	No	No	No	Yes	Yes	NA	Yes	Less than 8.33%	Greater than 2%	Greater than 48 inches	1	10	93
4115	3/17/2016	Wilkinson District 1	Lincoln	Rte. 112	Parallel	Concrete	Good	Yes	Yes	Yes	No	No	No	Yes	Yes	NA	Yes	Less than 8.33%	Greater than 2%	Greater than 48 inches	1	10	93
4135	3/18/2016	Sandt DOT	Plaistow	Rt 125	Perpendicular	Concrete	Good	Yes	Yes	Yes	No	No	No	Yes	Yes	NA	Yes	Less than 8.33%	Greater than 2%	Greater than 48 inches	1	10	93
2905	1/7/2016	Nichols district 1	Woodsville	Rte 10	Diagonal	Concrete	Good	Yes	Yes	Yes	No	No	No	Yes	NA	NA	Yes	Less than 8.33%	Less than or equal to 2%	36 to 48 inches	1	8	95
2868	12/28/2015	NM SWRPC	Hinsdale	School st	Perpendicular	Concrete	Good	Yes	Yes	Yes	No	No	No	Yes	Yes	NA	Yes	Less than 8.33%	Less than or equal to 2%	36 to 48 inches	1	8	95
2869	12/28/2015	NM SWRPC	Hinsdale	School st	Perpendicular	Concrete	Good	Yes	Yes	Yes	No	No	No	Yes	Yes	NA	Yes	Less than 8.33%	Less than or equal to 2%	36 to 48 inches	1	8	95
2809	12/16/2015	Wilkinson District 1	Littleton	Rte. 302	Perpendicular	Concrete	Good	Yes	Yes	Yes	No	No	No	Yes	Yes	NA	Yes	Less than 8.33%	Less than or equal to 2%	36 to 48 inches	1	8	95
2810	12/16/2015	Wilkinson District 1	Littleton	Rte. 302	Perpendicular	Concrete	Good	Yes	Yes	Yes	No	No	No	Yes	Yes	Yes	Yes	Less than 8.33%	Less than or equal to 2%	36 to 48 inches	1	8	95
2540	11/23/2015	Sandt DOT	Wolfeboro	Rt 28	Parallel	Concrete	Good	Yes	Yes	Yes	No	No	No	Yes	Yes	NA	Yes	Less than 8.33%	Less than or equal to 2%	36 to 48 inches	1	8	95
2541	11/23/2015	Sandt DOT	Wolfeboro	Rt 28	Parallel	Concrete	Good	Yes	Yes	Yes	No	No	No	Yes	Yes	NA	Yes	Less than 8.33%	Less than or equal to 2%	36 to 48 inches	1	8	95
2542	11/23/2015	Sandt DOT	Wolfeboro	Rt 28	Parallel	Concrete	Good	Yes	Yes	Yes	No	No	No	Yes	Yes	NA	Yes	Less than 8.33%	Less than or equal to 2%	36 to 48 inches	1	8	95
2543	11/23/2015	Sandt DOT	Wolfeboro	Rt 28	Parallel	Concrete	Good	Yes	Yes	Yes	No	No	No	Yes	Yes	NA	Yes	Less than 8.33%	Less than or equal to 2%	36 to 48 inches	1	8	95
2544	11/23/2015	Sandt DOT	Wolfeboro	Rt 28	Parallel	Concrete	Good	Yes	Yes	Yes	No	No	No	Yes	Yes	NA	Yes	Less than 8.33%	Less than or equal to 2%	36 to 48 inches	1	8	95
149	6/30/2015	Sandt DOT	Manchester	2nd Street	Diagonal	Concrete	Good	Yes	Yes	Yes	No	No	No	Yes	Yes	Yes	Yes	Less than 8.33%	Less than or equal to 2%	36 to 48 inches	1	8	95
1576	8/20/2015	Sandt DOT	Peterborough	Grove Street	Diagonal	Concrete	Good	Yes	Yes	Yes	No	No	No	Yes	Yes	NA	Yes	Less than 8.33%	Less than or equal to 2%	36 to 48 inches	1	8	95
1577	8/20/2015	Sandt DOT	Peterborough	Grove Street	Diagonal	Concrete	Good	Yes	Yes	Yes	No	No	No	Yes	Yes	NA	Yes	Less than 8.33%	Less than or equal to 2%	36 to 48 inches	1	8	95
2227	10/22/2015	Sandt DOT	Newington	Pease Blvd	Diagonal	Concrete	Good	Yes	Yes	Yes	No	No	No	Yes	Yes	Yes	Yes	Less than 8.33%	Less than or equal to 2%	36 to 48 inches	1	8	95
2228	10/22/2015	Sandt DOT	Newington	Pease Blvd	Diagonal	Concrete	Good	Yes	Yes	Yes	No	No	No	Yes	Yes	Yes	Yes	Less than 8.33%	Less than or equal to 2%	36 to 48 inches	1	8	95
98	6/24/2015	Sandt DOT	Hooksett	Daniel Webster Hwy	Parallel	Concrete	Good	Yes	Yes	Yes	No	No	No	Yes	Yes	NA	Yes	Less than 8.33%	Less than or equal to 2%	36 to 48 inches	1	8	95
92	6/23/2015	Sandt DOT	Hooksett	Hooksett Road	Diagonal	Concrete	Good	Yes	Yes	Yes	No	No	No	Yes	Yes	Yes	Yes	Less than 8.33%	Less than or equal to 2%	36 to 48 inches	1	8	95
94	6/23/2015	Sandt DOT	Hooksett	Hooksett Road	Perpendicular	Concrete	Good	Yes	Yes	Yes	No	No	No	Yes	Yes	NA	Yes	Less than 8.33%	Less than or equal to 2%	36 to 48 inches	1	8	95
95	6/24/2015	Sandt DOT	Hooksett	Hooksett Road	Diagonal	Concrete	Good	Yes	Yes	Yes	No	No	No	Yes	Yes	Yes	Yes	Less than 8.33%	Less than or equal to 2%	36 to 48 inches	1	8	95
2971	1/26/2016	Wilkinson District 1	Conway	Rte. 16 and 302	Perpendicular	Concrete	Good	Yes	Yes	Yes	No	Yes	No	Yes	Yes	NA	Yes	Less than 8.33%	Less than or equal to 2%	Greater than 48 inches	1	7	95
2924	1/8/2016	Sandt DOT	New London	Newport Road	Perpendicular	Concrete	Good	Yes	Yes	Yes	No	Yes	No	Yes	Yes	NA	Yes	Less than 8.33%	Less than or equal to 2%	Greater than 48 inches	1	7	95
2925	1/8/2016	Sandt DOT	New London	Newport Road	Perpendicular	Concrete	Good	Yes	Yes	Yes	No	Yes	No	Yes	Yes	NA	Yes	Less than 8.33%	Less than or equal to 2%	Greater than 48 inches	1	7	95
2926	1/8/2016	Sandt DOT	New London	Newport Road	Perpendicular	Concrete	Good	Yes	Yes	Yes	No	Yes	No	Yes	Yes	NA	Yes	Less than 8.33%	Less than or equal to 2%	Greater than 48 inches	1	7	95
2927	1/8/2016	Sandt DOT	New London	Newport Road	Perpendicular	Concrete	Good	Yes	Yes	Yes	No	Yes	No	Yes	Yes	NA	Yes	Less than 8.33%	Less than or equal to 2%	Greater than 48 inches	1	7	95
2928	1/8/2016	Sandt DOT	New London	Newport Road	Perpendicular	Concrete	Good	Yes	Yes	Yes	No	Yes	No	Yes	Yes	NA	Yes	Less than 8.33%	Less than or equal to 2%	Greater than 48 inches	1	7	95
2929	1/8/2016	Sandt DOT	New London	Newport Road	Perpendicular	Concrete	Good	Yes	Yes	Yes	No	Yes	No	Yes	Yes	NA	Yes	Less than 8.33%	Less than or equal to 2%	Greater than 48 inches	1	7	95
2930	1/8/2016	Sandt DOT	New London	Newport Road	Perpendicular	Concrete	Good	Yes	Yes	Yes	No	Yes	No	Yes	Yes	NA	Yes	Less than 8.33%	Less than or equal to 2%	Greater than 48 inches	1	7	95
2931	1/8/2016	Sandt DOT	New London	Newport Road	Perpendicular	Concrete	Good	Yes	Yes	Yes	No	Yes	No	Yes	Yes	NA	Yes	Less than 8.33%	Less than or equal to 2%	Greater than 48 inches	1	7	95
2896	1/5/2016	Sandt DOT	Belmont	Rt 140	Diagonal	Concrete	Good	Yes	Yes	Yes	No	Yes	No	Yes	Yes	Yes	Yes	Less than 8.33%	Less than or equal to 2%	Greater than 48 inches	1	7	95
2897	1/5/2016	Sandt DOT	Belmont	Rt 140	Diagonal	Concrete	Good	Yes	Yes	Yes	No	Yes	No	Yes	Yes	Yes	Yes	Less than 8.33%	Less than or equal to 2%	Greater than 48 inches	1	7	95
2873	12/28/2015	NM SWRPC	Hinsdale	School st	Combined	Concrete	Good	Yes	Yes	Yes	No	Yes	No	Yes	Yes	NA	Yes	Less than 8.33%	Less than or equal to 2%	Greater than 48 inches	1	7	95
2800	12/16/2015	Nichols district 1	Littleton	Rte 302	Parallel	Concrete	Good	Yes	Yes	Yes	No	Yes	No	Yes	NA	NA	Yes	Less than 8.33%	Less than or equal to 2%	Greater than 48 inches	1	7	95
2744	12/14/2015	Sandt DOT	Bristol	Rt 104	Perpendicular	Concrete	Good	Yes	Yes	Yes	No	Yes	No	Yes	Yes	NA	Yes	Less than 8.33%	Less than or equal to 2%	Greater than 48 inches	1	7	95
2745	12/14/2015	Sandt DOT	Bristol	Rt 104	Perpendicular	Concrete	Good	Yes	Yes	Yes	No	Yes	No	Yes	Yes	NA	Yes	Less than 8.33%	Less than or equal to 2%	Greater than 48 inches	1	7	95
2752	12/14/2015	Patch district 1	Littleton	Rte 302	Parallel	Concrete	Good	Yes	Yes	Yes	No	Yes	No	Yes	Yes	NA	Yes	Less than 8.33%	Less than or equal to 2%	Greater than 48 inches	1	7	95
2671	12/7/2015	Sandt DOT	Bristol	Rt 104	Perpendicular	Concrete	Good	Yes	Yes	Yes	No	Yes	No	Yes	Yes	NA	Yes	Less than 8.33%	Less than or equal to 2%	Greater than 48 inches	1	7	95
2672	12/7/2015	Sandt DOT	Bristol	Rt 104	Perpendicular	Concrete	Good	Yes	Yes	Yes	No	Yes	No	Yes	Yes	NA	Yes	Less than 8.33%	Less than or equal to 2%	Greater than 48 inches	1	7	95
2673	12/7/2015	Sandt DOT	Bristol	Rt 104	Perpendicular	Concrete	Good	Yes	Yes	Yes	No	Yes	No	Yes	Yes	NA	Yes	Less than 8.33%	Less than or equal to 2%	Greater than 48 inches	1	7	95
2674	12/7/2015	Sandt DOT	Bristol	Rt 104	Perpendicular	Concrete	Good	Yes	Yes	Yes	No	Yes	No	Yes	Yes	NA	Yes	Less than 8.33%	Less than or equal to 2%	Greater than 48 inches	1	7	95
2675	12/7/2015	Sandt DOT	Bristol	Rt 104	Perpendicular	Concrete	Good	Yes	Yes	Yes	No	Yes	No	Yes	Yes	NA	Yes	Less than 8.33%	Less than or equal to 2%	Greater than 48 inches	1	7	95
2676	12/7/2015	Sandt DOT	Bristol	Rt 104	Perpendicular	Concrete	Good	Yes	Yes	Yes	No	Yes	No	Yes	Yes	NA	Yes	Less than 8.33%	Less than or equal to 2%	Greater than 48 inches	1	7	95
2677	12/7/2015	Sandt DOT	Bristol	Rt 104	Perpendicular	Concrete	Good	Yes	Yes	Yes	No	Yes	No	Yes	Yes	NA	Yes	Less than 8.33%	Less than or equal to 2%	Greater than 48 inches	1	7	95
2678	12/7/2015	Sandt DOT	Bristol	Rt 104	Perpendicular	Concrete	Good	Yes	Yes	Yes	No	Yes	No	Yes	Yes	NA	Yes	Less than 8.33%	Less than or equal to 2%	Greater than 48 inches	1	7	95
2679	12/7/2015	Sandt DOT	Bristol	Rt 104	Perpendicular	Concrete	Good	Yes	Yes	Yes	No	Yes	No	Yes	Yes	NA	Yes	Less than 8.33%	Less than or equal to 2%	Greater than 48 inches	1	7	95
2680	12/7/2015	Sandt DOT	Bristol	Rt 104	Perpendicular	Concrete	Good	Yes	Yes	Yes	No	Yes	No	Yes	Yes	NA	Yes	Less than 8.33%	Less than or equal to 2%	Greater than 48 inches	1	7	95
2681	12/7/2015	Sandt DOT	Bristol	Rt 104	Perpendicular	Concrete	Good	Yes	Yes	Yes	No	Yes	No	Yes	Yes	NA	Yes	Less than 8.33%	Less than or equal to 2%	Greater than 48 inches	1	7	95
4081	3/15/2016	Sandt DOT	Salem	Salem Park n Ride	Perpendicular	Concrete	Good	Yes	Yes	Yes	No	Yes	No	Yes	Yes	Yes	Yes	Less than 8.33%	Less than or equal to 2%	Greater than 48 inches	1	7	95
4082	3/15/2016	Sandt DOT	Salem	Salem Park n Ride	Perpendicular	Concrete	Good	Yes	Yes	Yes	No	Yes	No	Yes	Yes	Yes	Yes	Less than 8.33%	Less than or equal to 2%	Greater than 48 inches	1	7	95
4144	3/18/2016	Sandt DOT	Plaistow	Rt 125	Perpendicular	Concrete	Good	Yes	Yes	Yes	No	Yes	No	Yes	Yes	NA	Yes	Less than 8.33%	Less than or equal to 2%	Greater than 48 inches	1	7	95
5135	3/23/2016	Sandt DOT	Plaistow	Rt 125	Perpendicular	Concrete	Good	Yes	Yes	Yes	No	Yes	No	Yes	Yes	NA	Yes	Less than 8.33%	Less than or equal to 2%	Greater than 48 inches	1	7	95
5136	3/23/2016	Sandt DOT	Plaistow	Rt 125	Perpendicular	Concrete	Good	Yes	Yes	Yes	No	Yes	No	Yes	Yes	NA	Yes	Less than 8.33%	Less than or equal to 2%	Greater than 48 inches	1	7	95
59	6/17/2015	Sandt DOT	Suncook	Main	Diagonal	Asphalt	Good	Yes	Yes	Yes	No	No	No	Yes	Yes	Yes	Yes	Less than 8.33%	Greater than 2%	Greater than 48 inches	1	6	96
57	6/17/2015	Sandt DOT	Pembroke	Broadway	Perpendicular	Asphalt	Good	Yes	Yes	Yes	No	No	No	Yes	Yes	NA	Yes	Less than 8.33%	Greater than 2%	Greater than 48 inches	1	6	96
73	6/22/2015	Sandt DOT	Allens	Main	Parallel	Concrete	Good	Yes	Yes	Yes	No	No	No	Yes	Yes	NA	Yes	Less than 8.33%	Less than or equal to 2%	Greater than 48 inches	1	4	97
1867	9/28/2015	Sandt DOT	Farmington	Central Street	Perpendicular	Concrete	Good	Yes	Yes	Yes	No	No	No	Yes	Yes	NA	Yes	Less than 8.33%	Less than or equal to 2%	Greater than 48 inches	1	4	97

1238	7/21/2015	Sandt DOT	Londonderry	Mammoth Road	Perpendicular	Concrete	Good	Yes	Yes	Yes	No	No	No	Yes	Yes	NA	Yes	Less than 8.33%	Less than or equal to 2%	Greater than 48 inches	1	4	97
1241	7/21/2015	Sandt DOT	Londonderry	Mammoth Road	Diagonal	Concrete	Good	Yes	Yes	Yes	No	No	No	Yes	Yes	Yes	Yes	Less than 8.33%	Less than or equal to 2%	Greater than 48 inches	1	4	97
1243	7/21/2015	Sandt DOT	Londonderry	Mammoth Road	Diagonal	Concrete	Good	Yes	Yes	Yes	No	No	No	Yes	Yes	Yes	Yes	Less than 8.33%	Less than or equal to 2%	Greater than 48 inches	1	4	97
1244	7/21/2015	Sandt DOT	Londonderry	Mammoth Road	Diagonal	Concrete	Good	Yes	Yes	Yes	No	No	No	Yes	Yes	Yes	Yes	Less than 8.33%	Less than or equal to 2%	Greater than 48 inches	1	4	97
1245	7/21/2015	Sandt DOT	Londonderry	Mammoth Road	Diagonal	Concrete	Good	Yes	Yes	Yes	No	No	No	Yes	Yes	Yes	Yes	Less than 8.33%	Less than or equal to 2%	Greater than 48 inches	1	4	97
1869	9/28/2015	Sandt DOT	Farmington	Main Street	Perpendicular	Concrete	Good	Yes	Yes	Yes	No	No	No	Yes	Yes	NA	Yes	Less than 8.33%	Less than or equal to 2%	Greater than 48 inches	1	4	97
1870	9/28/2015	Sandt DOT	Farmington	Main Street	Perpendicular	Concrete	Good	Yes	Yes	Yes	No	No	No	Yes	Yes	NA	Yes	Less than 8.33%	Less than or equal to 2%	Greater than 48 inches	1	4	97
1872	9/28/2015	Sandt DOT	Farmington	Main Street	Perpendicular	Concrete	Good	Yes	Yes	Yes	No	No	No	Yes	Yes	NA	Yes	Less than 8.33%	Less than or equal to 2%	Greater than 48 inches	1	4	97
1873	9/28/2015	Sandt DOT	Farmington	Main Street	Parallel	Concrete	Good	Yes	Yes	Yes	No	No	No	Yes	Yes	NA	Yes	Less than 8.33%	Less than or equal to 2%	Greater than 48 inches	1	4	97
1874	9/28/2015	Sandt DOT	Farmington	Main Street	Parallel	Concrete	Good	Yes	Yes	Yes	No	No	No	Yes	Yes	NA	Yes	Less than 8.33%	Less than or equal to 2%	Greater than 48 inches	1	4	97
1875	9/28/2015	Sandt DOT	Farmington	Main Street	Parallel	Concrete	Good	Yes	Yes	Yes	No	No	No	Yes	Yes	NA	Yes	Less than 8.33%	Less than or equal to 2%	Greater than 48 inches	1	4	97
1876	9/28/2015	Sandt DOT	Farmington	Main Street	Parallel	Concrete	Good	Yes	Yes	Yes	No	No	No	Yes	Yes	NA	Yes	Less than 8.33%	Less than or equal to 2%	Greater than 48 inches	1	4	97
1877	9/28/2015	Sandt DOT	Farmington	Main Street	Parallel	Concrete	Good	Yes	Yes	Yes	No	No	No	Yes	Yes	NA	Yes	Less than 8.33%	Less than or equal to 2%	Greater than 48 inches	1	4	97
1878	9/28/2015	Sandt DOT	Farmington	Main Street	Parallel	Concrete	Good	Yes	Yes	Yes	No	No	No	Yes	Yes	NA	Yes	Less than 8.33%	Less than or equal to 2%	Greater than 48 inches	1	4	97
1879	9/28/2015	Sandt DOT	Farmington	Main Street	Parallel	Concrete	Good	Yes	Yes	Yes	No	No	No	Yes	Yes	NA	Yes	Less than 8.33%	Less than or equal to 2%	Greater than 48 inches	1	4	97
1880	9/28/2015	Sandt DOT	Farmington	Main Street	Parallel	Concrete	Good	Yes	Yes	Yes	No	No	No	Yes	Yes	NA	Yes	Less than 8.33%	Less than or equal to 2%	Greater than 48 inches	1	4	97
1502	8/13/2015	Sandt DOT	Wilton	Main Street	Diagonal	Concrete	Good	Yes	Yes	Yes	No	No	No	Yes	Yes	Yes	Yes	Less than 8.33%	Less than or equal to 2%	Greater than 48 inches	1	4	97
1507	8/13/2015	Sandt DOT	Wilton	Main Street	Perpendicular	Concrete	Good	Yes	Yes	Yes	No	No	No	Yes	Yes	NA	Yes	Less than 8.33%	Less than or equal to 2%	Greater than 48 inches	1	4	97
1508	8/13/2015	Sandt DOT	Wilton	Main Street	Perpendicular	Concrete	Good	Yes	Yes	Yes	No	No	No	Yes	Yes	NA	Yes	Less than 8.33%	Less than or equal to 2%	Greater than 48 inches	1	4	97
1509	8/13/2015	Sandt DOT	Wilton	Main Street	Perpendicular	Concrete	Good	Yes	Yes	Yes	No	No	No	Yes	Yes	NA	Yes	Less than 8.33%	Less than or equal to 2%	Greater than 48 inches	1	4	97
1510	8/13/2015	Sandt DOT	Wilton	Main Street	Perpendicular	Concrete	Good	Yes	Yes	Yes	No	No	No	Yes	Yes	NA	Yes	Less than 8.33%	Less than or equal to 2%	Greater than 48 inches	1	4	97
1285	7/23/2015	Sandt DOT	Derry	E Broadway	Parallel	Concrete	Good	Yes	Yes	Yes	No	No	No	Yes	Yes	Yes	Yes	Less than 8.33%	Less than or equal to 2%	Greater than 48 inches	1	4	97
1286	7/23/2015	Sandt DOT	Derry	E Broadway	Parallel	Concrete	Good	Yes	Yes	Yes	No	No	No	Yes	Yes	Yes	Yes	Less than 8.33%	Less than or equal to 2%	Greater than 48 inches	1	4	97
1287	7/23/2015	Sandt DOT	Derry	E Broadway	Parallel	Concrete	Good	Yes	Yes	Yes	No	No	No	Yes	Yes	Yes	Yes	Less than 8.33%	Less than or equal to 2%	Greater than 48 inches	1	4	97
1261	7/22/2015	Sandt DOT	Derry	E Broadway	Parallel	Concrete	Good	Yes	Yes	Yes	No	No	No	Yes	Yes	Yes	Yes	Less than 8.33%	Less than or equal to 2%	Greater than 48 inches	1	4	97
1262	7/22/2015	Sandt DOT	Derry	E Broadway	Parallel	Concrete	Good	Yes	Yes	Yes	No	No	No	Yes	Yes	Yes	Yes	Less than 8.33%	Less than or equal to 2%	Greater than 48 inches	1	4	97
1263	7/22/2015	Sandt DOT	Derry	E Broadway	Parallel	Concrete	Good	Yes	Yes	Yes	No	No	No	Yes	Yes	Yes	Yes	Less than 8.33%	Less than or equal to 2%	Greater than 48 inches	1	4	97
1264	7/22/2015	Sandt DOT	Derry	E Broadway	Parallel	Concrete	Good	Yes	Yes	Yes	No	No	No	Yes	Yes	Yes	Yes	Less than 8.33%	Less than or equal to 2%	Greater than 48 inches	1	4	97
1283	7/22/2015	Sandt DOT	Derry	E Broadway	Parallel	Concrete	Good	Yes	Yes	Yes	No	No	No	Yes	Yes	Yes	Yes	Less than 8.33%	Less than or equal to 2%	Greater than 48 inches	1	4	97
1284	7/22/2015	Sandt DOT	Derry	E Broadway	Parallel	Concrete	Good	Yes	Yes	Yes	No	No	No	Yes	Yes	Yes	Yes	Less than 8.33%	Less than or equal to 2%	Greater than 48 inches	1	4	97
235	7/9/2015	Sandt DOT	Bedford	S River Road	Perpendicular	Concrete	Good	Yes	Yes	Yes	No	No	No	Yes	Yes	Yes	Yes	Less than 8.33%	Less than or equal to 2%	Greater than 48 inches	1	4	97
2299	10/27/2015	Sandt DOT	Hampton	Ocean Blvd	Perpendicular	Concrete	Good	Yes	Yes	Yes	No	No	No	Yes	Yes	NA	Yes	Less than 8.33%	Less than or equal to 2%	Greater than 48 inches	1	4	97
2238	10/23/2015	Sandt DOT	Newmarket	Exeter Road	Parallel	Concrete	Good	Yes	Yes	Yes	No	No	No	Yes	Yes	NA	Yes	Less than 8.33%	Less than or equal to 2%	Greater than 48 inches	1	4	97
89	6/22/2015	Sandt DOT	Hooksett	Hooksett rest area southbound	Perpendicular	Concrete	Good	Yes	Yes	Yes	No	No	No	Yes	Yes	NA	Yes	Less than 8.33%	Less than or equal to 2%	Greater than 48 inches	1	4	97
1690	9/4/2015	Sandt DOT	Keene	Rt 10 - Rt 101	Parallel	Concrete	Good	Yes	Yes	Yes	No	No	No	Yes	Yes	NA	Yes	Less than 8.33%	Less than or equal to 2%	Greater than 48 inches	1	4	97
1691	9/4/2015	Sandt DOT	Keene	Rt 10 - Rt 101	Parallel	Concrete	Good	Yes	Yes	Yes	No	No	No	Yes	Yes	NA	Yes	Less than 8.33%	Less than or equal to 2%	Greater than 48 inches	1	4	97
1692	9/4/2015	Sandt DOT	Keene	Rt 10 - Rt 101	Parallel	Concrete	Good	Yes	Yes	Yes	No	No	No	Yes	Yes	NA	Yes	Less than 8.33%	Less than or equal to 2%	Greater than 48 inches	1	4	97
1693	9/4/2015	Sandt DOT	Keene	Rt 10 - Rt 101	Parallel	Concrete	Good	Yes	Yes	Yes	No	No	No	Yes	Yes	NA	Yes	Less than 8.33%	Less than or equal to 2%	Greater than 48 inches	1	4	97
1694	9/4/2015	Sandt DOT	Keene	Rt 10 - Rt 101	Parallel	Concrete	Good	Yes	Yes	Yes	No	No	No	Yes	Yes	NA	Yes	Less than 8.33%	Less than or equal to 2%	Greater than 48 inches	1	4	97
1697	9/4/2015	Sandt DOT	Keene	Rt 10 - Rt 101	Parallel	Concrete	Good	Yes	Yes	Yes	No	No	No	Yes	Yes	NA	Yes	Less than 8.33%	Less than or equal to 2%	Greater than 48 inches	1	4	97
1698	9/4/2015	Sandt DOT	Keene	Rt 10 - Rt 101	Parallel	Concrete	Good	Yes	Yes	Yes	No	No	No	Yes	Yes	NA	Yes	Less than 8.33%	Less than or equal to 2%	Greater than 48 inches	1	4	97
1699	9/4/2015	Sandt DOT	Keene	Rt 10 - Rt 101	Parallel	Concrete	Good	Yes	Yes	Yes	No	No	No	Yes	Yes	NA	Yes	Less than 8.33%	Less than or equal to 2%	Greater than 48 inches	1	4	97
1700	9/4/2015	Sandt DOT	Keene	Rt 10 - Rt 101	Parallel	Concrete	Good	Yes	Yes	Yes	No	No	No	Yes	Yes	NA	Yes	Less than 8.33%	Less than or equal to 2%	Greater than 48 inches	1	4	97
1701	9/4/2015	Sandt DOT	Keene	Rt 10 - Rt 101	Parallel	Concrete	Good	Yes	Yes	Yes	No	No	No	Yes	Yes	NA	Yes	Less than 8.33%	Less than or equal to 2%	Greater than 48 inches	1	4	97
1702	9/4/2015	Sandt DOT	Keene	Rt 10 - Rt 101	Parallel	Concrete	Good	Yes	Yes	Yes	No	No	No	Yes	Yes	NA	Yes	Less than 8.33%	Less than or equal to 2%	Greater than 48 inches	1	4	97
1703	9/4/2015	Sandt DOT	Keene	Rt 10 - Rt 101	Parallel	Concrete	Good	Yes	Yes	Yes	No	No	No	Yes	Yes	NA	Yes	Less than 8.33%	Less than or equal to 2%	Greater than 48 inches	1	4	97
1704	9/4/2015	Sandt DOT	Keene	Rt 10 - Rt 101	Parallel	Concrete	Good	Yes	Yes	Yes	No	No	No	Yes	Yes	NA	Yes	Less than 8.33%	Less than or equal to 2%	Greater than 48 inches	1	4	97
1706	9/4/2015	Sandt DOT	Keene	Rt 10 - Rt 101	Parallel	Concrete	Good	Yes	Yes	Yes	No	No	No	Yes	Yes	NA	Yes	Less than 8.33%	Less than or equal to 2%	Greater than 48 inches	1	4	97
1707	9/4/2015	Sandt DOT	Keene	Rt 10 - Rt 101	Parallel	Concrete	Good	Yes	Yes	Yes	No	No	No	Yes	Yes	NA	Yes	Less than 8.33%	Less than or equal to 2%	Greater than 48 inches	1	4	97
1708	9/4/2015	Sandt DOT	Keene	Rt 10 - Rt 101	Parallel	Concrete	Good	Yes	Yes	Yes	No	No	No	Yes	Yes	NA	Yes	Less than 8.33%	Less than or equal to 2%	Greater than 48 inches	1	4	97
1709	9/4/2015	Sandt DOT	Keene	Rt 10 - Rt 101	Parallel	Concrete	Good	Yes	Yes	Yes	No	No	No	Yes	Yes	NA	Yes	Less than 8.33%	Less than or equal to 2%	Greater than 48 inches	1	4	97
1710	9/4/2015	Sandt DOT	Keene	Rt 10 - Rt 101	Parallel	Concrete	Good	Yes	Yes	Yes	No	No	No	Yes	Yes	NA	Yes	Less than 8.33%	Less than or equal to 2%	Greater than 48 inches	1	4	97
1711	9/4/2015	Sandt DOT	Keene	Rt 10 - Rt 101	Parallel	Concrete	Good	Yes	Yes	Yes	No	No	No	Yes	Yes	NA	Yes	Less than 8.33%	Less than or equal to 2%	Greater than 48 inches	1	4	97
1681	9/3/2015	Sandt DOT	Keene	Rt 12-Rt 101	Parallel	Concrete	Good	Yes	Yes	Yes	No	No	No	Yes	Yes	NA	Yes	Less than 8.33%	Less than or equal to 2%	Greater than 48 inches	1	4	97
1682	9/3/2015	Sandt DOT	Keene	Rt 12-Rt 101	Parallel	Concrete	Good	Yes	Yes	Yes	No	No	No	Yes	Yes	NA	Yes	Less than 8.33%	Less than or equal to 2%	Greater than 48 inches	1	4	97
1683	9/3/2015	Sandt DOT	Keene	Rt 12-Rt 101	Parallel	Concrete	Good	Yes	Yes	Yes	No	No	No	Yes	Yes	NA	Yes	Less than 8.33%	Less than or equal to 2%	Greater than 48 inches	1	4	97
1684	9/3/2015	Sandt DOT	Keene	Rt 12-Rt 101	Parallel	Concrete	Good	Yes	Yes	Yes	No	No	No	Yes	Yes	NA	Yes	Less than 8.33%	Less than or equal to 2%	Greater than 48 inches	1	4	97
1685	9/3/2015	Sandt DOT	Keene	Rt 12-Rt 101	Parallel	Concrete	Good	Yes	Yes	Yes	No	No	No	Yes	Yes	NA	Yes	Less than 8.33%	Less than or equal to 2%	Greater than 48 inches	1	4	97
1686	9/3/2015	Sandt DOT	Keene	Rt 12-Rt 101	Parallel	Concrete	Good	Yes	Yes	Yes	No	No	No	Yes	Yes	NA	Yes	Less than 8.33%	Less than or equal to 2%	Greater than 48 inches	1	4	97
1687	9/3/2015	Sandt DOT	Keene	Rt 12-Rt 101	Parallel	Concrete	Good	Yes	Yes	Yes	No	No	No	Yes	Yes	NA	Yes	Less than 8.33%	Less than or equal to 2%	Greater than 48 inches	1	4	97
1688	9/3/2015	Sandt DOT	Keene	Rt 12-Rt 101	Parallel	Concrete	Good	Yes	Yes	Yes	No	No	No	Yes	Yes	NA	Yes	Less than 8.33%	Less than or equal to 2%	Greater than 48 inches	1	4	97
1689	9/3/2015	Sandt DOT	Keene	Rt 10 - Rt 101	Parallel	Concrete	Good	Yes	Yes	Yes	No	No	No	Yes	Yes	NA	Yes	Less than 8.33%	Less than or equal to 2%	Greater than 48 inches	1	4	97
1430	8/7/2015	Sandt DOT	Goffstown	Main Street	Parallel	Concrete	Good	Yes	Yes	Yes	No	No	No	Yes	Yes	NA	Yes	Less than 8.33%	Less than or equal to 2%	Greater than 48 inches	1	4	97
1860	9/28/2015	Sandt DOT	Farmington	Central Street	Combined	Concrete	Good	Yes	Yes	Yes	No	No	No	Yes	Yes	NA	Yes	Less than 8.33%	Less than or equal to 2%	Greater than 48 inches	1	4	97
1866	9/28/2015	Sandt DOT	Farmington	Central Street	Combined	Concrete	Good	Yes	Yes	Yes	No	No	No	Yes	Yes	NA	Yes	Less than 8.33%	Less than or equal to 2%	Greater than 48 inches	1	4	97
1871	9/28/2015	Sandt DOT	Farmington	Central Street	Combined	Concrete	Good	Yes	Yes	Yes	No	No	No	Yes	Yes	NA	Yes	Less than 8.33%	Less than or equal to 2%	Greater than 48 inches	1	4	97
2446	11/2/2015	Sandt DOT	Hampton	Ocean Blvd	Perpendicular	Concrete	Good	Yes	Yes	Yes	No	No	No	Yes	Yes	NA	Yes	Less than 8.33%	Less than or equal to 2%	Greater than 48 inches	1	4	97
2447	11/2/2015	Sandt DOT	Hampton	Ocean Blvd	Perpendicular	Concrete	Good	Yes	Yes	Yes	No	No	No	Yes	Yes	NA	Yes	Less than 8.33%	Less than or equal to 2%	Greater than 48 inches	1	4	97
2448	11/2/2015	Sandt DOT	Hampton	Ocean Blvd	Perpendicular	Concrete	Good	Yes	Yes	Yes	No	No	No	Yes	Yes	NA	Yes	Less than 8.33%	Less than or equal to 2%	Greater than 48 inches	1	4	97
2451	11/2/2015	Sandt DOT	Hampton	Ocean Blvd	Perpendicular	Concrete	Good	Yes	Yes	Yes	No	No	No	Yes	Yes	NA	Yes	Less than 8.33%	Less than or equal to 2%	Greater than 48 inches	1	4	97
2455	11/2/2015	Sandt DOT	Hampton	Ocean Blvd	Perpendicular	Concrete	Good	Yes	Yes	Yes	No	No	No	Yes	Yes	NA	Yes	Less than 8.33%	Less than or equal to 2%	Greater than 48 inches	1	4	97
2456	11/2/2015	Sandt DOT	Hampton	Ocean Blvd	Perpendicular	Concrete	Good	Yes	Yes	Yes	No	No	No	Yes	Yes	NA	Yes	Less than 8.33%	Less than or equal to 2%	Greater than 48 inches	1	4	97
2457	11/2/2015	Sandt DOT	Hampton	Ocean Blvd	Perpendicular	Concrete	Good	Yes	Yes	Yes	No	No	No	Yes	Yes	NA	Yes	Less than 8.33%	Less than or equal to 2%	Greater than 48 inches	1	4	97
2460	11/2/2015	Sandt DOT	Hampton	Ocean Blvd	Perpendicular	Concrete	Good	Yes	Yes	Yes	No	No	No	Yes	Yes	NA	Yes	Less than 8.33%	Less than or equal to 2%	Greater than 48 inches	1	4	97
2461	11/2/2015	Sandt DOT	Hampton	Ocean Blvd	Perpendicular	Concrete	Good	Yes	Yes	Yes	No	No	No	Yes	Yes	NA	Yes	Less than 8.33%	Less than or equal to 2%	Greater than 48 inches	1	4	97
2462	11/2/2015	Sandt DOT	Hampton	Ocean Blvd	Perpendicular	Concrete	Good	Yes	Yes	Yes	No	No	No	Yes	Yes	NA	Yes	Less than 8.33%	Less than or equal to 2%	Greater than 48 inches	1	4	97
2315	10/29/2015	Sandt DOT	Hampton	Ocean Blvd	Perpendicular	Concrete	Good	Yes	Yes	Yes	No	No	No	Yes	Yes	NA	Yes	Less than 8.33%	Less than or equal to 2%	Greater than 48 inches	1	4	97
2318	10/29/2015	Sandt DOT	Hampton	Ocean Blvd	Perpendicular	Concrete	Good	Yes	Yes	Yes	No	No	No	Yes	Yes	NA	Yes	Less than 8.33%	Less than or equal to 2%	Greater than 48 inches	1	4	97
2321	10/29/2015	Sandt DOT	Hampton	Ocean Blvd	Perpendicular	Concrete	Good	Yes	Yes	Yes	No	No	No	Yes	Yes	NA	Yes	Less than 8.33%	Less than or equal to 2%	Greater than 48 inches	1	4	97
2322	10/29/2015	Sandt DOT	Hampton	Ocean Blvd	Perpendicular	Concrete	Good	Yes	Yes	Yes	No	No	No	Yes	Yes	NA	Yes	Less than 8.33%	Less than or equal to 2%	Greater than 48 inches	1	4	97
2323	10/29/2015	Sandt DOT	Hampton	Ocean Blvd	Perpendicular	Concrete	Good	Yes	Yes	Yes	No	No	No	Yes	Yes	NA	Yes	Less than 8.33%	Less than or equal to 2%	Greater than 48 inches	1	4	97
2325	10/29/2015	Sandt DOT	Hampton	Ocean Blvd	Perpendicular	Concrete	Good	Yes	Yes	Yes	No	No	No	Yes	Yes	NA	Yes	Less than 8.33%	Less than or equal to 2%	Greater than 48 inches	1	4	97
2326	10/29/2015	Sandt DOT	Hampton	Ocean Blvd	Perpendicular	Concrete	Good	Yes	Yes	Yes	No	No	No	Yes	Yes	NA	Yes	Less than 8.33%	Less than or equal to 2%	Greater than 48 inches	1	4	97
2327	10/29/2015	Sandt DOT	Hampton	Ocean Blvd	Perpendicular	Concrete	Good	Yes	Yes	Yes	No	No	No	Yes	Yes	NA	Yes	Less than 8.33%	Less than or equal to 2%	Greater than 48 inches	1	4	97
2328	10/29/2015	Sandt DOT	Hampton	Ocean Blvd	Perpendicular	Concrete	Good	Yes	Yes	Yes	No	No	No	Yes	Yes	NA	Yes	Less than 8.33%	Less than or equal to 2%	Greater than 48 inches	1	4	97
2329	10/29/2015	Sandt DOT	Hampton	Ocean Blvd	Perpendicular	Concrete	Good	Yes	Yes	Yes	No	No	No	Yes	Yes	NA	Yes	Less than 8.33%	Less than or equal to 2%	Greater than 48 inches	1	4	97
2330	10/29/2015	Sandt DOT	Hampton	Ocean Blvd	Perpendicular	Concrete	Good	Yes	Yes	Yes	No	No	No	Yes	Yes	NA	Yes	Less than 8.33%	Less than or equal to 2%	Greater than 48 inches	1	4	97
2331	10/29/2015	Sandt DOT	Hampton	Ocean Blvd	Perpendicular	Concrete	Good	Yes	Yes	Yes	No	No	No	Yes	Yes	NA	Yes	Less than 8.33%	Less than or equal to 2%	Greater than 48 inches	1	4	97
2332	10/29/2015	Sandt DOT	Hampton	Ocean Blvd	Perpendicular	Concrete	Good	Yes	Yes	Yes	No	No	No	Yes	Yes	NA	Yes	Less than 8.33%	Less than or equal to 2%	Greater than 48 inches	1	4	97
2333	10/29/2015	Sandt DOT	Hampton	Ocean Blvd	Perpendicular	Concrete	Good	Yes	Yes	Yes	No	No	No	Yes	Yes	NA	Yes	Less than 8.33%	Less than or equal to 2%	Greater than 48 inches	1	4	97
2336	10/29/2015	Sandt DOT	Hampton	Ocean Blvd	Perpendicular	Concrete	Good	Yes	Yes	Yes	No	No	No	Yes	Yes	NA	Yes	Less than 8.33%	Less than or equal to 2%	Greater than 48 inches	1	4	97
2338	10/29/2015	Sandt DOT	Hampton	Ocean Blvd	Perpendicular	Concrete	Good	Yes	Yes	Yes	No	No	No	Yes	Yes	NA	Yes	Less than 8.33%	Less than or equal to 2%	Greater than 48 inches	1	4	97
2339	10/29/2015	Sandt DOT	Hampton	Ocean Blvd	Perpendicular	Concrete	Good	Yes	Yes	Yes	No	No	No	Yes	Yes	NA	Yes	Less than 8.33%	Less than or equal to 2%	Greater than 48 inches	1	4	97
2340	10/29/2015	Sandt DOT	Hampton	Ocean Blvd	Perpendicular	Concrete	Good	Yes	Yes	Yes	No	No	No	Yes	Yes	NA	Yes	Less than 8.33%	Less than or equal to 2%	Greater than 48 inches	1	4	97
2418	10/29/2015	Sandt DOT	Hampton	Ocean Blvd	Perpendicular	Concrete	Good	Yes	Yes	Yes	No	No	No	Yes	Yes	NA	Yes	Less than 8.33%	Less than or equal to 2%	Greater than 48 inches	1	4	97
2421	10/29/2015	Sandt DOT	Hampton	Ocean Blvd	Perpendicular	Concrete	Good	Yes	Yes	Yes	No	No	No	Yes	Yes	NA	Yes	Less than 8.33%	Less than or equal to 2%	Greater than 48 inches	1	4	97
2424	10/29/2015	Sandt DOT	Hampton	Ocean Blvd	Perpendicular	Concrete	Good	Yes	Yes	Yes	No	No	No	Yes	Yes	NA	Yes	Less than 8.33%	Less than or equal to 2%	Greater than 48 inches	1	4	97
2425	10/29/2015	Sandt DOT	Hampton	Ocean Blvd	Perpendicular	Concrete	Good	Yes	Yes	Yes	No	No	No	Yes	Yes	NA	Yes	Less than 8.33%	Less than or equal to 2%	Greater than 48 inches	1	4	97
2426	10/29/2015	Sandt DOT	Hampton	Ocean Blvd	Perpendicular	Concrete	Good	Yes	Yes	Yes	No	No	No	Yes	Yes	NA	Yes	Less than 8.33%	Less than or equal to 2%	Greater than 48 inches	1	4	97
2427	10/29/2015	Sandt DOT	Hampton	Ocean Blvd	Perpendicular	Concrete	Good	Yes	Yes	Yes	No	No	No	Yes	Yes	NA	Yes	Less than 8.33%	Less than or equal to 2%	Greater than 48 inches	1	4	97
2428	10/29/2015	Sandt DOT	Hampton	Ocean Blvd	Perpendicular	Concrete	Good	Yes	Yes	Yes	No	No	No	Yes	Yes	NA	Yes	Less than 8.33%	Less than or equal to 2%	Greater than 48 inches	1	4	97
2429	10/29/2015	Sandt DOT	Hampton	Ocean Blvd	Perpendicular	Concrete	Good	Yes	Yes	Yes	No	No	No	Yes	Yes	NA	Yes	Less than 8.33%	Less than or equal to 2%	Greater than 48 inches	1	4	97
2430	10/29/2015	Sandt DOT	Hampton	Ocean Blvd	Perpendicular	Concrete	Good	Yes	Yes	Yes	No	No	No	Yes	Yes	NA	Yes	Less than 8.33%	Less than or equal to 2%	Greater than 48 inches	1	4	97
2431	10/29/2015	Sandt DOT	Hampton	Ocean Blvd	Perpendicular	Concrete	Good	Yes	Yes	Yes	No	No	No	Yes	Yes	NA	Yes	Less than 8.33%	Less than or equal to 2%	Greater than 48 inches	1	4	97
2432	10/29/2015	Sandt DOT	Hampton	Ocean Blvd	Perpendicular	Concrete	Good	Yes	Yes	Yes	No	No	No	Yes	Yes	NA	Yes	Less than 8.33%	Less than or equal to 2%	Greater than 48 inches	1	4	97
2433	10/29/2015	Sandt DOT	Hampton	Ocean Blvd	Perpendicular	Concrete	Good	Yes	Yes	Yes	No	No	No	Yes	Yes	NA	Yes	Less than 8.33%	Less than or equal to 2%	Greater than 48 inches	1	4	97
2434	10/29/2015	Sandt DOT	Hampton	Ocean Blvd	Perpendicular	Concrete	Good	Yes	Yes	Yes	No	No	No	Yes	Yes	NA	Yes	Less than 8.33%	Less than or equal to 2%	Greater than 48 inches	1	4	97
2435	10/29/2015	Sandt DOT	Hampton	Ocean Blvd	Perpendicular	Concrete	Good	Yes	Yes	Yes	No	No	No	Yes	Yes	NA	Yes	Less than 8.33%	Less than or equal to 2%	Greater than 48 inches	1	4	97
2436	10/29/2015	Sandt DOT	Hampton	Ocean Blvd	Perpendicular	Concrete	Good	Yes	Yes	Yes	No	No	No	Yes	Yes	NA	Yes	Less than 8.33%	Less than or equal to 2%	Greater than 48 inches	1	4	97
2439	10/29/2015	Sandt DOT	Hampton	Ocean Blvd	Perpendicular	Concrete	Good	Yes	Yes	Yes	No	No	No	Yes	Yes	NA	Yes	Less than 8.33%	Less than or equal to 2%	Greater than 48 inches	1	4	97
2441	10/29/2015	Sandt DOT	Hampton	Ocean Blvd	Perpendicular	Concrete	Good	Yes	Yes	Yes	No	No	No	Yes	Yes	NA	Yes	Less than 8.33%	Less than or equal to 2%	Greater than 48 inches	1	4	97
2442	10/29/2015	Sandt DOT	Hampton	Ocean Blvd	Perpendicular	Concrete	Good	Yes	Yes	Yes	No	No	No	Yes	Yes	NA	Yes	Less than 8.33%	Less than or equal to 2%	Greater than 48 inches	1	4	97
2443	10/29/2015	Sandt DOT	Hampton	Ocean Blvd	Perpendicular	Concrete	Good	Yes	Yes	Yes	No	No	No	Yes	Yes	NA	Yes	Less than 8.33%	Less than or equal to 2%	Greater than 48 inches	1	4	97

2445	10/29/2015	Sandt DOT	Hampton	Ocean Blvd	Perpendicular	Concrete	Good	Yes	Yes	Yes	No	No	No	Yes	Yes	NA	Yes	Less than 8.33%	Less than or equal to 2%	Greater than 48 inches	1	4	97
97	6/24/2015	Sandt DOT	Hooksett	Hooksett Road	Diagonal	Asphalt	Good	Yes	Yes	Yes	No	No	No	Yes	Yes	Yes	Yes	Less than 8.33%	Less than or equal to 2%	36 to 48 inches	1	4	97
1771	9/17/2015	Sandt DOT	Newport	Rt 10	Diagonal	Concrete	Good	Yes	Yes	Yes	No	No	No	Yes	Yes	Yes	Yes	Less than 8.33%	Less than or equal to 2%	Greater than 48 inches	1	4	97
99	6/25/2015	Sandt DOT	Hooksett	W River	Diagonal	Concrete	Good	Yes	Yes	Yes	No	No	No	Yes	Yes	Yes	Yes	Less than 8.33%	Less than or equal to 2%	Greater than 48 inches	1	4	97
1734	9/14/2015	Sandt DOT	Charlestown	Rt 12	Perpendicular	Concrete	Good	Yes	Yes	Yes	No	No	No	Yes	Yes	NA	Yes	Less than 8.33%	Less than or equal to 2%	Greater than 48 inches	1	4	97
1735	9/14/2015	Sandt DOT	Charlestown	Rt 12	Perpendicular	Concrete	Good	Yes	Yes	Yes	No	No	No	Yes	Yes	NA	Yes	Less than 8.33%	Less than or equal to 2%	Greater than 48 inches	1	4	97
1738	9/14/2015	Sandt DOT	Charlestown	Rt 12	Perpendicular	Concrete	Good	Yes	Yes	Yes	No	No	No	Yes	Yes	NA	Yes	Less than 8.33%	Less than or equal to 2%	Greater than 48 inches	1	4	97
1739	9/14/2015	Sandt DOT	Charlestown	Rt 12	Perpendicular	Concrete	Good	Yes	Yes	Yes	No	No	No	Yes	Yes	NA	Yes	Less than 8.33%	Less than or equal to 2%	Greater than 48 inches	1	4	97
1740	9/14/2015	Sandt DOT	Charlestown	Rt 12	Perpendicular	Concrete	Good	Yes	Yes	Yes	No	No	No	Yes	Yes	NA	Yes	Less than 8.33%	Less than or equal to 2%	Greater than 48 inches	1	4	97
1743	9/14/2015	Sandt DOT	Charlestown	Rt 12	Perpendicular	Concrete	Good	Yes	Yes	Yes	No	No	No	Yes	Yes	NA	Yes	Less than 8.33%	Less than or equal to 2%	Greater than 48 inches	1	4	97
1744	9/14/2015	Sandt DOT	Charlestown	Rt 12	Perpendicular	Concrete	Good	Yes	Yes	Yes	No	No	No	Yes	Yes	NA	Yes	Less than 8.33%	Less than or equal to 2%	Greater than 48 inches	1	4	97
1745	9/14/2015	Sandt DOT	Charlestown	Rt 12	Perpendicular	Concrete	Good	Yes	Yes	Yes	No	No	No	Yes	Yes	NA	Yes	Less than 8.33%	Less than or equal to 2%	Greater than 48 inches	1	4	97
1746	9/14/2015	Sandt DOT	Charlestown	Rt 12	Perpendicular	Concrete	Good	Yes	Yes	Yes	No	No	No	Yes	Yes	NA	Yes	Less than 8.33%	Less than or equal to 2%	Greater than 48 inches	1	4	97
1747	9/14/2015	Sandt DOT	Charlestown	Rt 12	Perpendicular	Concrete	Good	Yes	Yes	Yes	No	No	No	Yes	Yes	NA	Yes	Less than 8.33%	Less than or equal to 2%	Greater than 48 inches	1	4	97
1748	9/14/2015	Sandt DOT	Charlestown	Rt 12	Perpendicular	Concrete	Good	Yes	Yes	Yes	No	No	No	Yes	Yes	NA	Yes	Less than 8.33%	Less than or equal to 2%	Greater than 48 inches	1	4	97
1749	9/14/2015	Sandt DOT	Charlestown	Rt 12	Perpendicular	Concrete	Good	Yes	Yes	Yes	No	No	No	Yes	Yes	NA	Yes	Less than 8.33%	Less than or equal to 2%	Greater than 48 inches	1	4	97
2275	10/23/2015	Sandt DOT	Newmarket	Main Street	Parallel	Concrete	Good	Yes	Yes	Yes	No	No	No	Yes	Yes	NA	Yes	Less than 8.33%	Less than or equal to 2%	Greater than 48 inches	1	4	97
2278	10/23/2015	Sandt DOT	Newmarket	Main Street	Perpendicular	Concrete	Good	Yes	Yes	Yes	No	No	No	Yes	Yes	NA	Yes	Less than 8.33%	Less than or equal to 2%	Greater than 48 inches	1	4	97
2279	10/23/2015	Sandt DOT	Newmarket	Main Street	Perpendicular	Concrete	Good	Yes	Yes	Yes	No	No	No	Yes	Yes	NA	Yes	Less than 8.33%	Less than or equal to 2%	Greater than 48 inches	1	4	97
2281	10/23/2015	Sandt DOT	Newmarket	Main Street	Perpendicular	Concrete	Good	Yes	Yes	Yes	No	No	No	Yes	Yes	NA	Yes	Less than 8.33%	Less than or equal to 2%	Greater than 48 inches	1	4	97
2282	10/23/2015	Sandt DOT	Newmarket	Main Street	Parallel	Concrete	Good	Yes	Yes	Yes	No	No	No	Yes	Yes	NA	Yes	Less than 8.33%	Less than or equal to 2%	Greater than 48 inches	1	4	97
2283	10/23/2015	Sandt DOT	Newmarket	Main Street	Parallel	Concrete	Good	Yes	Yes	Yes	No	No	No	Yes	Yes	NA	Yes	Less than 8.33%	Less than or equal to 2%	Greater than 48 inches	1	4	97
2187	10/21/2015	Sandt DOT	Portsmouth	Market Street	Diagonal	Concrete	Good	Yes	Yes	Yes	No	No	No	Yes	Yes	Yes	Yes	Less than 8.33%	Less than or equal to 2%	Greater than 48 inches	1	4	97
2188	10/21/2015	Sandt DOT	Portsmouth	Market Street	Diagonal	Concrete	Good	Yes	Yes	Yes	No	No	No	Yes	Yes	Yes	Yes	Less than 8.33%	Less than or equal to 2%	Greater than 48 inches	1	4	97
2189	10/21/2015	Sandt DOT	Portsmouth	Market Street	Diagonal	Concrete	Good	Yes	Yes	Yes	No	No	No	Yes	Yes	Yes	Yes	Less than 8.33%	Less than or equal to 2%	Greater than 48 inches	1	4	97
2190	10/21/2015	Sandt DOT	Portsmouth	Market Street	Diagonal	Concrete	Good	Yes	Yes	Yes	No	No	No	Yes	Yes	Yes	Yes	Less than 8.33%	Less than or equal to 2%	Greater than 48 inches	1	4	97
1994	10/5/2015	Sandt DOT	Rochester	Washington Street	Parallel	Concrete	Good	Yes	Yes	Yes	No	No	No	Yes	Yes	NA	Yes	Less than 8.33%	Less than or equal to 2%	Greater than 48 inches	1	4	97
1995	10/5/2015	Sandt DOT	Rochester	Washington Street	Parallel	Concrete	Good	Yes	Yes	Yes	No	No	No	Yes	Yes	NA	Yes	Less than 8.33%	Less than or equal to 2%	Greater than 48 inches	1	4	97
1996	10/5/2015	Sandt DOT	Rochester	Washington Street	Diagonal	Concrete	Good	Yes	Yes	Yes	No	No	No	Yes	Yes	Yes	Yes	Less than 8.33%	Less than or equal to 2%	Greater than 48 inches	1	4	97
1997	10/5/2015	Sandt DOT	Rochester	Washington Street	Diagonal	Concrete	Good	Yes	Yes	Yes	No	No	No	Yes	Yes	Yes	Yes	Less than 8.33%	Less than or equal to 2%	Greater than 48 inches	1	4	97
1998	10/5/2015	Sandt DOT	Rochester	Washington Street	Diagonal	Concrete	Good	Yes	Yes	Yes	No	No	No	Yes	Yes	Yes	Yes	Less than 8.33%	Less than or equal to 2%	Greater than 48 inches	1	4	97
1999	10/5/2015	Sandt DOT	Rochester	Washington Street	Perpendicular	Concrete	Good	Yes	Yes	Yes	No	No	No	Yes	Yes	NA	Yes	Less than 8.33%	Less than or equal to 2%	Greater than 48 inches	1	4	97
2002	10/5/2015	Sandt DOT	Rochester	Washington Street	Perpendicular	Concrete	Good	Yes	Yes	Yes	No	No	No	Yes	Yes	NA	Yes	Less than 8.33%	Less than or equal to 2%	Greater than 48 inches	1	4	97
2003	10/5/2015	Sandt DOT	Rochester	Washington Street	Perpendicular	Concrete	Good	Yes	Yes	Yes	No	No	No	Yes	Yes	NA	Yes	Less than 8.33%	Less than or equal to 2%	Greater than 48 inches	1	4	97
2004	10/5/2015	Sandt DOT	Rochester	Washington Street	Perpendicular	Concrete	Good	Yes	Yes	Yes	No	No	No	Yes	Yes	NA	Yes	Less than 8.33%	Less than or equal to 2%	Greater than 48 inches	1	4	97
2005	10/5/2015	Sandt DOT	Rochester	Washington Street	Perpendicular	Concrete	Good	Yes	Yes	Yes	No	No	No	Yes	Yes	NA	Yes	Less than 8.33%	Less than or equal to 2%	Greater than 48 inches	1	4	97
2006	10/5/2015	Sandt DOT	Rochester	Washington Street	Parallel	Concrete	Good	Yes	Yes	Yes	No	No	No	Yes	Yes	NA	Yes	Less than 8.33%	Less than or equal to 2%	Greater than 48 inches	1	4	97
2007	10/5/2015	Sandt DOT	Rochester	Washington Street	Parallel	Concrete	Good	Yes	Yes	Yes	No	No	No	Yes	Yes	NA	Yes	Less than 8.33%	Less than or equal to 2%	Greater than 48 inches	1	4	97
2008	10/5/2015	Sandt DOT	Rochester	Washington Street	Parallel	Concrete	Good	Yes	Yes	Yes	No	No	No	Yes	Yes	NA	Yes	Less than 8.33%	Less than or equal to 2%	Greater than 48 inches	1	4	97
2009	10/5/2015	Sandt DOT	Rochester	Washington Street	Parallel	Concrete	Good	Yes	Yes	Yes	No	No	No	Yes	Yes	NA	Yes	Less than 8.33%	Less than or equal to 2%	Greater than 48 inches	1	4	97
2010	10/5/2015	Sandt DOT	Rochester	Washington Street	Parallel	Concrete	Good	Yes	Yes	Yes	No	No	No	Yes	Yes	NA	Yes	Less than 8.33%	Less than or equal to 2%	Greater than 48 inches	1	4	97
2011	10/5/2015	Sandt DOT	Rochester	Washington Street	Parallel	Concrete	Good	Yes	Yes	Yes	No	No	No	Yes	Yes	NA	Yes	Less than 8.33%	Less than or equal to 2%	Greater than 48 inches	1	4	97
1958	10/2/2015	Sandt DOT	Rochester	N Main St	Diagonal	Concrete	Good	Yes	Yes	Yes	No	No	No	Yes	Yes	Yes	Yes	Less than 8.33%	Less than or equal to 2%	Greater than 48 inches	1	4	97
1959	10/2/2015	Sandt DOT	Rochester	N Main St	Diagonal	Concrete	Good	Yes	Yes	Yes	No	No	No	Yes	Yes	Yes	Yes	Less than 8.33%	Less than or equal to 2%	Greater than 48 inches	1	4	97
1960	10/2/2015	Sandt DOT	Rochester	N Main St	Diagonal	Concrete	Good	Yes	Yes	Yes	No	No	No	Yes	Yes	Yes	Yes	Less than 8.33%	Less than or equal to 2%	Greater than 48 inches	1	4	97
1961	10/2/2015	Sandt DOT	Rochester	N Main St	Diagonal	Concrete	Good	Yes	Yes	Yes	No	No	No	Yes	Yes	Yes	Yes	Less than 8.33%	Less than or equal to 2%	Greater than 48 inches	1	4	97
1962	10/2/2015	Sandt DOT	Rochester	N Main St	Perpendicular	Concrete	Good	Yes	Yes	Yes	No	No	No	Yes	Yes	NA	Yes	Less than 8.33%	Less than or equal to 2%	Greater than 48 inches	1	4	97
1965	10/2/2015	Sandt DOT	Rochester	N Main St	Parallel	Concrete	Good	Yes	Yes	Yes	No	No	No	Yes	Yes	NA	Yes	Less than 8.33%	Less than or equal to 2%	Greater than 48 inches	1	4	97
1966	10/2/2015	Sandt DOT	Rochester	N Main St	Parallel	Concrete	Good	Yes	Yes	Yes	No	No	No	Yes	Yes	NA	Yes	Less than 8.33%	Less than or equal to 2%	Greater than 48 inches	1	4	97
1915	10/1/2015	Sandt DOT	Rochester	N Main	Parallel	Concrete	Good	Yes	Yes	Yes	No	No	No	Yes	Yes	NA	Yes	Less than 8.33%	Less than or equal to 2%	Greater than 48 inches	1	4	97
1818	9/24/2015	Sandt DOT	Lebanon	S Main Street	Diagonal	Concrete	Good	Yes	Yes	Yes	No	No	No	Yes	Yes	Yes	Yes	Less than 8.33%	Less than or equal to 2%	Greater than 48 inches	1	4	97
1819	9/24/2015	Sandt DOT	Lebanon	S Main Street	Parallel	Concrete	Good	Yes	Yes	Yes	No	No	No	Yes	Yes	NA	Yes	Less than 8.33%	Less than or equal to 2%	Greater than 48 inches	1	4	97
1820	9/24/2015	Sandt DOT	Lebanon	S Main Street	Perpendicular	Concrete	Good	Yes	Yes	Yes	No	No	No	Yes	Yes	NA	Yes	Less than 8.33%	Less than or equal to 2%	Greater than 48 inches	1	4	97
1821	9/24/2015	Sandt DOT	Lebanon	S Main Street	Diagonal	Concrete	Good	Yes	Yes	Yes	No	No	No	Yes	Yes	Yes	Yes	Less than 8.33%	Less than or equal to 2%	Greater than 48 inches	1	4	97
1822	9/24/2015	Sandt DOT	Lebanon	S Main Street	Diagonal	Concrete	Good	Yes	Yes	Yes	No	No	No	Yes	Yes	Yes	Yes	Less than 8.33%	Less than or equal to 2%	Greater than 48 inches	1	4	97
1823	9/24/2015	Sandt DOT	Lebanon	S Main Street	Diagonal	Concrete	Good	Yes	Yes	Yes	No	No	No	Yes	Yes	Yes	Yes	Less than 8.33%	Less than or equal to 2%	Greater than 48 inches	1	4	97
1824	9/24/2015	Sandt DOT	Lebanon	S Main Street	Perpendicular	Concrete	Good	Yes	Yes	Yes	No	No	No	Yes	Yes	NA	Yes	Less than 8.33%	Less than or equal to 2%	Greater than 48 inches	1	4	97
1825	9/24/2015	Sandt DOT	Lebanon	S Main Street	Perpendicular	Concrete	Good	Yes	Yes	Yes	No	No	No	Yes	Yes	NA	Yes	Less than 8.33%	Less than or equal to 2%	Greater than 48 inches	1	4	97
1826	9/24/2015	Sandt DOT	Lebanon	S Main Street	Perpendicular	Concrete	Good	Yes	Yes	Yes	No	No	No	Yes	Yes	NA	Yes	Less than 8.33%	Less than or equal to 2%	Greater than 48 inches	1	4	97
1827	9/24/2015	Sandt DOT	Lebanon	S Main Street	Perpendicular	Concrete	Good	Yes	Yes	Yes	No	No	No	Yes	Yes	NA	Yes	Less than 8.33%	Less than or equal to 2%	Greater than 48 inches	1	4	97
1828	9/24/2015	Sandt DOT	Lebanon	S Main Street	Perpendicular	Concrete	Good	Yes	Yes	Yes	No	No	No	Yes	Yes	NA	Yes	Less than 8.33%	Less than or equal to 2%	Greater than 48 inches	1	4	97
1829	9/24/2015	Sandt DOT	Lebanon	S Main Street	Perpendicular	Concrete	Good	Yes	Yes	Yes	No	No	No	Yes	Yes	NA	Yes	Less than 8.33%	Less than or equal to 2%	Greater than 48 inches	1	4	97
1713	9/4/2015	Sandt DOT	Marlborough.	Main St 101	Parallel	Concrete	Good	Yes	Yes	Yes	No	No	No	Yes	Yes	NA	Yes	Less than 8.33%	Less than or equal to 2%	Greater than 48 inches	1	4	97
1714	9/4/2015	Sandt DOT	Marlborough.	Main St 101	Parallel	Concrete	Good	Yes	Yes	Yes	No	No	No	Yes	Yes	NA	Yes	Less than 8.33%	Less than or equal to 2%	Greater than 48 inches	1	4	97
1715	9/4/2015	Sandt DOT	Marlborough.	Main St 101	Diagonal	Concrete	Good	Yes	Yes	Yes	No	No	No	Yes	Yes	NA	Yes	Less than 8.33%	Less than or equal to 2%	Greater than 48 inches	1	4	97
1716	9/4/2015	Sandt DOT	Marlborough.	Main St 101	Parallel	Concrete	Good	Yes	Yes	Yes	No	No	No	Yes	Yes	NA	Yes	Less than 8.33%	Less than or equal to 2%	Greater than 48 inches	1	4	97
1721	9/4/2015	Sandt DOT	Marlborough.	Main St 101	Parallel	Concrete	Good	Yes	Yes	Yes	No	No	No	Yes	Yes	NA	Yes	Less than 8.33%	Less than or equal to 2%	Greater than 48 inches	1	4	97
1722	9/4/2015	Sandt DOT	Marlborough.	Main St 101	Parallel	Concrete	Good	Yes	Yes	Yes	No	No	No	Yes	Yes	NA	Yes	Less than 8.33%	Less than or equal to 2%	Greater than 48 inches	1	4	97
1723	9/4/2015	Sandt DOT	Marlborough.	Main St 101	Perpendicular	Concrete	Good	Yes	Yes	Yes	No	No	No	Yes	Yes	NA	Yes	Less than 8.33%	Less than or equal to 2%	Greater than 48 inches	1	4	97
1724	9/4/2015	Sandt DOT	Marlborough.	Main St 101	Perpendicular	Concrete	Good	Yes	Yes	Yes	No	No	No	Yes	Yes	NA	Yes	Less than 8.33%	Less than or equal to 2%	Greater than 48 inches	1	4	97
1725	9/4/2015	Sandt DOT	Marlborough.	Main St 101	Parallel	Concrete	Good	Yes	Yes	Yes	No	No	No	Yes	Yes	NA	Yes	Less than 8.33%	Less than or equal to 2%	Greater than 48 inches	1	4	97
1614	8/27/2015	Sandt DOT	Jaffrey	Rt 137	Parallel	Concrete	Good	Yes	Yes	Yes	No	No	No	Yes	Yes	Yes	Yes	Less than 8.33%	Less than or equal to 2%	Greater than 48 inches	1	4	97
1552	8/17/2015	Sandt DOT	Bennington	Rt 31	Perpendicular	Concrete	Good	Yes	Yes	Yes	No	No	No	Yes	Yes	NA	Yes	Less than 8.33%	Less than or equal to 2%	Greater than 48 inches	1	4	97
1553	8/17/2015	Sandt DOT	Bennington	Rt 31	Perpendicular	Concrete	Good	Yes	Yes	Yes	No	No	No	Yes	Yes	NA	Yes	Less than 8.33%	Less than or equal to 2%	Greater than 48 inches	1	4	97
1554	8/17/2015	Sandt DOT	Bennington	Rt 31	Perpendicular	Concrete	Good	Yes	Yes	Yes	No	No	No	Yes	Yes	NA	Yes	Less than 8.33%	Less than or equal to 2%	Greater than 48 inches	1	4	97
1555	8/17/2015	Sandt DOT	Bennington	Rt 31	Perpendicular	Concrete	Good	Yes	Yes	Yes	No	No	No	Yes	Yes	NA	Yes	Less than 8.33%	Less than or equal to 2%	Greater than 48 inches	1	4	97
1556	8/17/2015	Sandt DOT	Bennington	Rt 31	Perpendicular	Concrete	Good	Yes	Yes	Yes	No	No	No	Yes	Yes	NA	Yes	Less than 8.33%	Less than or equal to 2%	Greater than 48 inches	1	4	97
1557	8/17/2015	Sandt DOT	Bennington	Rt 31	Perpendicular	Concrete	Good	Yes	Yes	Yes	No	No	No	Yes	Yes	NA	Yes	Less than 8.33%	Less than or equal to 2%	Greater than 48 inches	1	4	97
1512	8/14/2015	Sandt DOT	Wilton	Island Street	Perpendicular	Concrete	Good	Yes	Yes	Yes	No	No	No	Yes	Yes	NA	Yes	Less than 8.33%	Less than or equal to 2%	Greater than 48 inches	1	4	97
1513	8/14/2015	Sandt DOT	Wilton	Island Street	Perpendicular	Concrete	Good	Yes	Yes	Yes	No	No	No	Yes	Yes	NA	Yes	Less than 8.33%	Less than or equal to 2%	Greater than 48 inches	1	4	97
1457	8/10/2015	Sandt DOT	Hillsborough	Center	Perpendicular	Concrete	Good	Yes	Yes	Yes	No	No	No	Yes	Yes	NA	Yes	Less than 8.33%	Less than or equal to 2%	Greater than 48 inches	1	4	97
1458	8/10/2015	Sandt DOT	Hillsborough	Center	Diagonal	Concrete	Good	Yes	Yes	Yes	No	No	No	Yes	Yes	Yes	Yes	Less than 8.33%	Less than or equal to 2%	Greater than 48 inches	1	4	97
1459	8/10/2015	Sandt DOT	Hillsborough	Center	Perpendicular	Concrete	Good	Yes	Yes	Yes	No	No	No	Yes	Yes	NA	Yes	Less than 8.33%	Less than or equal to 2%	Greater than 48 inches	1	4	97
1460	8/10/2015	Sandt DOT	Hillsborough	Center	Perpendicular	Concrete	Good	Yes	Yes	Yes	No	No	No	Yes	Yes	NA	Yes	Less than 8.33%	Less than or equal to 2%	Greater than 48 inches	1	4	97
1461	8/10/2015	Sandt DOT	Hillsborough	Center	Perpendicular	Concrete	Good	Yes	Yes	Yes	No	No	No	Yes	Yes	NA	Yes	Less than 8.33%	Less than or equal to 2%	Greater than 48 inches	1	4	97
1462	8/10/2015	Sandt DOT	Hillsborough	Center	Perpendicular	Concrete	Good	Yes	Yes	Yes	No	No	No	Yes	Yes	NA	Yes	Less than 8.33%	Less than or equal to 2%	Greater than 48 inches	1	4	97
1463	8/10/2015	Sandt DOT	Hillsborough	Center	Diagonal	Concrete	Good	Yes	Yes	Yes	No	No	No	Yes	Yes	Yes	Yes	Less than 8.33%	Less than or equal to 2%	Greater than 48 inches	1	4	97
1464	8/10/2015	Sandt DOT	Hillsborough	Center	Diagonal	Concrete	Good	Yes	Yes	Yes	No	No	No	Yes	Yes	Yes	Yes	Less than 8.33%	Less than or equal to 2%	Greater than 48 inches	1	4	97
1465	8/10/2015	Sandt DOT	Hillsborough	Center	Diagonal	Concrete	Good	Yes	Yes	Yes	No	No	No	Yes	Yes	Yes	Yes	Less than 8.33%	Less than or equal to 2%	Greater than 48 inches	1	4	97
1466	8/10/2015	Sandt DOT	Hillsborough	Center	Perpendicular	Concrete	Good	Yes	Yes	Yes	No	No	No	Yes	Yes	Yes	Yes	Less than 8.33%	Less than or equal to 2%	Greater than 48 inches	1	4	97
1467	8/10/2015	Sandt DOT	Hillsborough	Center	Perpendicular	Concrete	Good	Yes	Yes	Yes	No	No	No	Yes	Yes	Yes	Yes	Less than 8.33%	Less than or equal to 2%	Greater than 48 inches	1	4	97
1468	8/10/2015	Sandt DOT	Hillsborough	Center	Perpendicular	Concrete	Good	Yes	Yes	Yes	No	No	No	Yes	Yes	Yes	Yes	Less than 8.33%	Less than or equal to 2%	Greater than 48 inches	1	4	97
1431	8/7/2015	Sandt DOT	Goffstown	Main Street	Perpendicular	Concrete	Good	Yes	Yes	Yes	No	No	No	Yes	Yes	NA	Yes	Less than 8.33%	Less than or equal to 2%	Greater than 48 inches	1	4	97
1432	8/7/2015	Sandt DOT	Goffstown	Main Street	Perpendicular	Concrete	Good	Yes	Yes	Yes	No	No	No	Yes	Yes	NA	Yes	Less than 8.33%	Less than or equal to 2%	Greater than 48 inches	1	4	97
1378	7/30/2015	Sandt DOT	Milford	Nashua Street	Diagonal	Concrete	Good	Yes	Yes	Yes	No	No	No	Yes	Yes	Yes	Yes	Less than 8.33%	Less than or equal to 2%	Greater than 48 inches	1	4	97
1379	7/30/2015	Sandt DOT	Milford	Nashua Street	Diagonal	Concrete	Good	Yes	Yes	Yes	No	No	No	Yes	Yes	Yes	Yes	Less than 8.33%	Less than or equal to 2%	Greater than 48 inches	1	4	97
1382	7/30/2015	Sandt DOT	Milford	Nashua Street	Parallel	Concrete	Good	Yes	Yes	Yes	No	No	No	Yes	Yes	NA	Yes	Less than 8.33%	Less than or equal to 2%	Greater than 48 inches	1	4	97
1383	7/30/2015	Sandt DOT	Milford	Nashua Street	Parallel	Concrete	Good	Yes	Yes	Yes	No	No	No	Yes	Yes	NA	Yes	Less than 8.33%	Less than or equal to 2%	Greater than 48 inches	1	4	97
1384	7/30/2015	Sandt DOT	Milford	Nashua Street	Parallel	Concrete	Good	Yes	Yes	Yes	No	No	No	Yes	Yes	NA	Yes	Less than 8.33%	Less than or equal to 2%	Greater than 48 inches	1	4	97
1385	7/30/2015	Sandt DOT	Milford	Nashua Street	Parallel	Concrete	Good	Yes	Yes	Yes	No	No	No	Yes	Yes	NA	Yes	Less than 8.33%	Less than or equal to 2%	Greater than 48 inches	1	4	97
1332	7/24/2015	Sandt DOT	Londonderry	Rockingham Road	Diagonal	Concrete	Good	Yes	Yes	Yes	No	No	No	Yes	Yes	NA	Yes	Less than 8.33%	Less than or equal to 2%	Greater than 48 inches	1	4	97
1333	7/24/2015	Sandt DOT	Londonderry	Rockingham Road	Parallel	Concrete	Good	Yes	Yes	Yes	No	No	No	Yes	Yes	NA	Yes	Less than 8.33%	Less than or equal to 2%	Greater than 48 inches	1	4	97
1334	7/24/2015	Sandt DOT	Londonderry	Rockingham Road	Parallel	Concrete	Good	Yes	Yes	Yes	No	No	No	Yes	Yes	NA	Yes	Less than 8.33%	Less than or equal to 2%	Greater than 48 inches	1	4	97
1335	7/24/2015	Sandt DOT	Londonderry	Rockingham Road	Parallel	Concrete	Good	Yes	Yes	Yes	No	No	No	Yes	Yes	NA	Yes	Less than 8.33%	Less than or equal to 2%	Greater than 48 inches	1	4	97
1336	7/24/2015	Sandt DOT	Londonderry	Rockingham Road	Parallel	Concrete	Good	Yes	Yes	Yes	No	No	No	Yes	Yes	NA	Yes	Less than 8.33%	Less than or equal to 2%	Greater than 48 inches	1	4	97
1337	7/24/2015	Sandt DOT	Londonderry	Rockingham Road	Parallel	Concrete	Good	Yes	Yes	Yes	No	No	No	Yes	Yes	NA	Yes	Less than 8.33%	Less than or equal to 2%	Greater than 48 inches	1	4	97
1338	7/24/2015	Sandt DOT	Londonderry	Rockingham Road	Perpendicular	Concrete	Good	Yes	Yes	Yes	No	No	No	Yes	Yes	NA	Yes	Less than 8.33%	Less than or equal to 2%	Greater than 48 inches	1	4	97
1339	7/24/2015	Sandt DOT	Londonderry	Rockingham Road	Perpendicular	Concrete	Good	Yes	Yes	Yes	No	No	No	Yes	Yes	NA	Yes	Less than 8.33%	Less than or equal to 2%	Greater than 48 inches	1	4	97
1340	7/24/2015	Sandt DOT	Londonderry	Rockingham Road	Parallel	Concrete	Good	Yes	Yes	Yes	No	No	No	Yes	Yes	NA	Yes	Less than 8.33%	Less than or equal to 2%	Greater than 48 inches	1	4	97
1341	7/24/2015	Sandt DOT	Londonderry	Rockingham Road	Parallel	Concrete	Good	Yes	Yes	Yes	No	No	No	Yes	Yes	NA	Yes	Less than 8.33%	Less than or equal to 2%	Greater than 48 inches	1	4	97
1344	7/24/2015	Sandt DOT	Londonderry	Rockingham Road	Diagonal	Concrete	Good	Yes	Yes	Yes	No	No	No	Yes	Yes	NA	Yes	Less than 8.33%	Less than or equal to 2%	Greater than 48 inches	1	4	97
1345	7/24/2015	Sandt DOT	Londonderry	Rockingham Road	Diagonal	Concrete	Good	Yes	Yes	Yes	No	No	No	Yes	Yes	NA	Yes	Less than 8.33%	Less than or equal to 2%	Greater than 48 inches	1	4	97
1346	7/24/2015	Sandt DOT	Londonderry	Rockingham Road	Perpendicular	Concrete	Good	Yes	Yes	Yes	No	No	No	Yes	Yes	NA	Yes	Less than 8.33%	Less than or equal to 2%	Greater than 48 inches	1	4	97

1347	7/24/2015	Sandt DOT	Londonderry	Rockingham Road	Perpendicular	Concrete	Good	Yes	Yes	Yes	No	No	No	Yes	Yes	NA	Yes	Less than 8.33%	Less than or equal to 2%	Greater than 48 inches	1	4	97
1348	7/24/2015	Sandt DOT	Londonderry	Rockingham Road	Perpendicular	Concrete	Good	Yes	Yes	Yes	No	No	No	Yes	Yes	NA	Yes	Less than 8.33%	Less than or equal to 2%	Greater than 48 inches	1	4	97
1229	7/20/2015	Sandt DOT	Chichester	US 202	Perpendicular	Concrete	Good	Yes	Yes	Yes	No	No	No	Yes	Yes	Yes	Yes	Less than 8.33%	Less than or equal to 2%	Greater than 48 inches	1	4	97
1230	7/20/2015	Sandt DOT	Chichester	US 202	Diagonal	Concrete	Good	Yes	Yes	Yes	No	No	No	Yes	Yes	Yes	Yes	Less than 8.33%	Less than or equal to 2%	Greater than 48 inches	1	4	97
1233	7/20/2015	Sandt DOT	Chichester	US 202	Perpendicular	Concrete	Good	Yes	Yes	Yes	No	No	No	Yes	Yes	Yes	Yes	Less than 8.33%	Less than or equal to 2%	Greater than 48 inches	1	4	97
1234	7/20/2015	Sandt DOT	Chichester	US 202	Diagonal	Concrete	Good	Yes	Yes	Yes	No	No	No	Yes	Yes	Yes	Yes	Less than 8.33%	Less than or equal to 2%	Greater than 48 inches	1	4	97
363	7/16/2015	Sandt DOT	Windham	111	Perpendicular	Concrete	Good	Yes	Yes	Yes	No	No	No	Yes	Yes	NA	Yes	Less than 8.33%	Less than or equal to 2%	Greater than 48 inches	1	4	97
375	7/16/2015	Sandt DOT	Derry	Manchester Road	Perpendicular	Concrete	Good	Yes	Yes	Yes	No	No	No	Yes	Yes	NA	Yes	Less than 8.33%	Less than or equal to 2%	Greater than 48 inches	1	4	97
376	7/16/2015	Sandt DOT	Derry	Manchester Road	Perpendicular	Concrete	Good	Yes	Yes	Yes	No	No	No	Yes	Yes	NA	Yes	Less than 8.33%	Less than or equal to 2%	Greater than 48 inches	1	4	97
377	7/16/2015	Sandt DOT	Derry	Manchester Road	Perpendicular	Concrete	Good	Yes	Yes	Yes	No	No	No	Yes	Yes	NA	Yes	Less than 8.33%	Less than or equal to 2%	Greater than 48 inches	1	4	97
379	7/16/2015	Sandt DOT	Derry	Manchester Road	Perpendicular	Concrete	Good	Yes	Yes	Yes	No	No	No	Yes	Yes	NA	Yes	Less than 8.33%	Less than or equal to 2%	Greater than 48 inches	1	4	97
381	7/16/2015	Sandt DOT	Derry	Manchester Road	Perpendicular	Concrete	Good	Yes	Yes	Yes	No	No	No	Yes	Yes	NA	Yes	Less than 8.33%	Less than or equal to 2%	Greater than 48 inches	1	4	97
302	7/13/2015	Sandt DOT	Nashua	East Dunstable Road	Perpendicular	Concrete	Good	Yes	Yes	Yes	No	No	No	Yes	Yes	NA	Yes	Less than 8.33%	Less than or equal to 2%	Greater than 48 inches	1	4	97
303	7/13/2015	Sandt DOT	Nashua	East Dunstable Road	Perpendicular	Concrete	Good	Yes	Yes	Yes	No	No	No	Yes	Yes	NA	Yes	Less than 8.33%	Less than or equal to 2%	Greater than 48 inches	1	4	97
307	7/13/2015	Sandt DOT	Nashua	East Dunstable Road	Perpendicular	Concrete	Good	Yes	Yes	Yes	No	No	No	Yes	Yes	NA	Yes	Less than 8.33%	Less than or equal to 2%	Greater than 48 inches	1	4	97
256	7/10/2015	Sandt DOT	Merrimack	Daniel Webster Hwy	Perpendicular	Concrete	Good	Yes	Yes	Yes	No	No	No	Yes	Yes	NA	Yes	Less than 8.33%	Less than or equal to 2%	Greater than 48 inches	1	4	97
257	7/10/2015	Sandt DOT	Merrimack	Daniel Webster Hwy	Perpendicular	Concrete	Good	Yes	Yes	Yes	No	No	No	Yes	Yes	NA	Yes	Less than 8.33%	Less than or equal to 2%	Greater than 48 inches	1	4	97
258	7/10/2015	Sandt DOT	Merrimack	Daniel Webster Hwy	Parallel	Concrete	Good	Yes	Yes	Yes	No	No	No	Yes	Yes	NA	Yes	Less than 8.33%	Less than or equal to 2%	Greater than 48 inches	1	4	97
259	7/10/2015	Sandt DOT	Merrimack	Daniel Webster Hwy	Parallel	Concrete	Good	Yes	Yes	Yes	No	No	No	Yes	Yes	NA	Yes	Less than 8.33%	Less than or equal to 2%	Greater than 48 inches	1	4	97
260	7/10/2015	Sandt DOT	Merrimack	Daniel Webster Hwy	Perpendicular	Concrete	Good	Yes	Yes	Yes	No	No	No	Yes	Yes	NA	Yes	Less than 8.33%	Less than or equal to 2%	Greater than 48 inches	1	4	97
261	7/10/2015	Sandt DOT	Merrimack	Daniel Webster Hwy	Perpendicular	Concrete	Good	Yes	Yes	Yes	No	No	No	Yes	Yes	NA	Yes	Less than 8.33%	Less than or equal to 2%	Greater than 48 inches	1	4	97
262	7/10/2015	Sandt DOT	Merrimack	Daniel Webster Hwy	Perpendicular	Concrete	Good	Yes	Yes	Yes	No	No	No	Yes	Yes	NA	Yes	Less than 8.33%	Less than or equal to 2%	Greater than 48 inches	1	4	97
263	7/10/2015	Sandt DOT	Merrimack	Daniel Webster Hwy	Perpendicular	Concrete	Good	Yes	Yes	Yes	No	No	No	Yes	Yes	NA	Yes	Less than 8.33%	Less than or equal to 2%	Greater than 48 inches	1	4	97
264	7/10/2015	Sandt DOT	Merrimack	Daniel Webster Hwy	Perpendicular	Concrete	Good	Yes	Yes	Yes	No	No	No	Yes	Yes	NA	Yes	Less than 8.33%	Less than or equal to 2%	Greater than 48 inches	1	4	97
265	7/10/2015	Sandt DOT	Merrimack	Daniel Webster Hwy	Perpendicular	Concrete	Good	Yes	Yes	Yes	No	No	No	Yes	Yes	NA	Yes	Less than 8.33%	Less than or equal to 2%	Greater than 48 inches	1	4	97
266	7/10/2015	Sandt DOT	Merrimack	Daniel Webster Hwy	Perpendicular	Concrete	Good	Yes	Yes	Yes	No	No	No	Yes	Yes	NA	Yes	Less than 8.33%	Less than or equal to 2%	Greater than 48 inches	1	4	97
267	7/10/2015	Sandt DOT	Merrimack	Daniel Webster Hwy	Perpendicular	Concrete	Good	Yes	Yes	Yes	No	No	No	Yes	Yes	NA	Yes	Less than 8.33%	Less than or equal to 2%	Greater than 48 inches	1	4	97
225	7/9/2015	Sandt DOT	Bedford	S River Road	Diagonal	Concrete	Good	Yes	Yes	Yes	No	No	No	Yes	Yes	Yes	Yes	Less than 8.33%	Less than or equal to 2%	Greater than 48 inches	1	4	97
226	7/9/2015	Sandt DOT	Bedford	S River Road	Diagonal	Concrete	Good	Yes	Yes	Yes	No	No	No	Yes	Yes	Yes	Yes	Less than 8.33%	Less than or equal to 2%	Greater than 48 inches	1	4	97
227	7/9/2015	Sandt DOT	Bedford	S River Road	Diagonal	Concrete	Good	Yes	Yes	Yes	No	No	No	Yes	Yes	Yes	Yes	Less than 8.33%	Less than or equal to 2%	Greater than 48 inches	1	4	97
229	7/9/2015	Sandt DOT	Bedford	S River Road	Diagonal	Concrete	Good	Yes	Yes	Yes	No	No	No	Yes	Yes	Yes	Yes	Less than 8.33%	Less than or equal to 2%	Greater than 48 inches	1	4	97
230	7/9/2015	Sandt DOT	Bedford	S River Road	Diagonal	Concrete	Good	Yes	Yes	Yes	No	No	No	Yes	Yes	Yes	Yes	Less than 8.33%	Less than or equal to 2%	Greater than 48 inches	1	4	97
231	7/9/2015	Sandt DOT	Bedford	S River Road	Diagonal	Concrete	Good	Yes	Yes	Yes	No	No	No	Yes	Yes	Yes	Yes	Less than 8.33%	Less than or equal to 2%	Greater than 48 inches	1	4	97
232	7/9/2015	Sandt DOT	Bedford	S River Road	Perpendicular	Concrete	Good	Yes	Yes	Yes	No	No	No	Yes	Yes	Yes	Yes	Less than 8.33%	Less than or equal to 2%	Greater than 48 inches	1	4	97
233	7/9/2015	Sandt DOT	Bedford	S River Road	Perpendicular	Concrete	Good	Yes	Yes	Yes	No	No	No	Yes	Yes	Yes	Yes	Less than 8.33%	Less than or equal to 2%	Greater than 48 inches	1	4	97
234	7/9/2015	Sandt DOT	Bedford	S River Road	Perpendicular	Concrete	Good	Yes	Yes	Yes	No	No	No	Yes	Yes	Yes	Yes	Less than 8.33%	Less than or equal to 2%	Greater than 48 inches	1	4	97
250	7/9/2015	Sandt DOT	Merrimack	Daniel Webster Hwy	Perpendicular	Concrete	Good	Yes	Yes	Yes	No	No	No	Yes	Yes	NA	Yes	Less than 8.33%	Less than or equal to 2%	Greater than 48 inches	1	4	97
251	7/9/2015	Sandt DOT	Merrimack	Daniel Webster Hwy	Perpendicular	Concrete	Good	Yes	Yes	Yes	No	No	No	Yes	Yes	NA	Yes	Less than 8.33%	Less than or equal to 2%	Greater than 48 inches	1	4	97
252	7/9/2015	Sandt DOT	Merrimack	Daniel Webster Hwy	Perpendicular	Concrete	Good	Yes	Yes	Yes	No	No	No	Yes	Yes	NA	Yes	Less than 8.33%	Less than or equal to 2%	Greater than 48 inches	1	4	97
253	7/9/2015	Sandt DOT	Merrimack	Daniel Webster Hwy	Perpendicular	Concrete	Good	Yes	Yes	Yes	No	No	No	Yes	Yes	NA	Yes	Less than 8.33%	Less than or equal to 2%	Greater than 48 inches	1	4	97
254	7/9/2015	Sandt DOT	Merrimack	Daniel Webster Hwy	Perpendicular	Concrete	Good	Yes	Yes	Yes	No	No	No	Yes	Yes	NA	Yes	Less than 8.33%	Less than or equal to 2%	Greater than 48 inches	1	4	97
255	7/9/2015	Sandt DOT	Merrimack	Daniel Webster Hwy	Perpendicular	Concrete	Good	Yes	Yes	Yes	No	No	No	Yes	Yes	NA	Yes	Less than 8.33%	Less than or equal to 2%	Greater than 48 inches	1	4	97
178	7/2/2015	Sandt DOT	Manchester	Londonderry Tpke	Parallel	Concrete	Good	Yes	Yes	Yes	No	No	No	Yes	Yes	NA	Yes	Less than 8.33%	Less than or equal to 2%	Greater than 48 inches	1	4	97
179	7/2/2015	Sandt DOT	Manchester	Londonderry Tpke	Parallel	Concrete	Good	Yes	Yes	Yes	No	No	No	Yes	Yes	NA	Yes	Less than 8.33%	Less than or equal to 2%	Greater than 48 inches	1	4	97
101	6/25/2015	Sandt DOT	Hooksett	W River	Perpendicular	Concrete	Good	Yes	Yes	Yes	No	No	No	Yes	Yes	NA	Yes	Less than 8.33%	Less than or equal to 2%	Greater than 48 inches	1	4	97
102	6/25/2015	Sandt DOT	Hooksett	W River	Perpendicular	Concrete	Good	Yes	Yes	Yes	No	No	No	Yes	Yes	NA	Yes	Less than 8.33%	Less than or equal to 2%	Greater than 48 inches	1	4	97
74	6/22/2015	Sandt DOT	Allenstown	Main	Parallel	Concrete	Good	Yes	Yes	Yes	No	No	No	Yes	Yes	NA	Yes	Less than 8.33%	Less than or equal to 2%	Greater than 48 inches	1	4	97
76	6/22/2015	Sandt DOT	Allenstown	Main	Diagonal	Concrete	Good	Yes	Yes	Yes	No	No	No	Yes	Yes	Yes	Yes	Less than 8.33%	Less than or equal to 2%	Greater than 48 inches	1	4	97
77	6/22/2015	Sandt DOT	Allenstown	Main	Diagonal	Concrete	Good	Yes	Yes	Yes	No	No	No	Yes	Yes	Yes	Yes	Less than 8.33%	Less than or equal to 2%	Greater than 48 inches	1	4	97
81	6/22/2015	Sandt DOT	Hooksett	College Park	Perpendicular	Concrete	Good	Yes	Yes	Yes	No	No	No	Yes	Yes	NA	Yes	Less than 8.33%	Less than or equal to 2%	Greater than 48 inches	1	4	97
53	6/17/2015	Sandt DOT	Pembroke	Broadway	Diagonal	Concrete	Good	Yes	Yes	Yes	No	No	No	Yes	Yes	Yes	Yes	Less than 8.33%	Less than or equal to 2%	Greater than 48 inches	1	4	97
56	6/17/2015	Sandt DOT	Pembroke	Broadway	Diagonal	Concrete	Good	Yes	Yes	Yes	No	No	No	Yes	Yes	Yes	Yes	Less than 8.33%	Less than or equal to 2%	Greater than 48 inches	1	4	97
68	6/17/2015	Sandt DOT	Sandt DOT	Main	Parallel	Concrete	Good	Yes	Yes	Yes	No	No	No	Yes	Yes	NA	Yes	Less than 8.33%	Less than or equal to 2%	Greater than 48 inches	1	4	97
2117	10/14/2015	Sandt DOT	Portsmouth	Rt 1	Perpendicular	Concrete	Good	Yes	Yes	Yes	No	No	No	Yes	Yes	NA	Yes	Less than 8.33%	Less than or equal to 2%	Greater than 48 inches	1	4	97
2118	10/14/2015	Sandt DOT	Portsmouth	Rt 1	Perpendicular	Concrete	Good	Yes	Yes	Yes	No	No	No	Yes	Yes	NA	Yes	Less than 8.33%	Less than or equal to 2%	Greater than 48 inches	1	4	97
2119	10/14/2015	Sandt DOT	Portsmouth	Rt 1	Perpendicular	Concrete	Good	Yes	Yes	Yes	No	No	No	Yes	Yes	NA	Yes	Less than 8.33%	Less than or equal to 2%	Greater than 48 inches	1	4	97
2120	10/14/2015	Sandt DOT	Portsmouth	Rt 1	Perpendicular	Concrete	Good	Yes	Yes	Yes	No	No	No	Yes	Yes	NA	Yes	Less than 8.33%	Less than or equal to 2%	Greater than 48 inches	1	4	97
2121	10/14/2015	Sandt DOT	Portsmouth	Rt 1	Perpendicular	Concrete	Good	Yes	Yes	Yes	No	No	No	Yes	Yes	NA	Yes	Less than 8.33%	Less than or equal to 2%	Greater than 48 inches	1	4	97
2122	10/14/2015	Sandt DOT	Portsmouth	Rt 1	Perpendicular	Concrete	Good	Yes	Yes	Yes	No	No	No	Yes	Yes	NA	Yes	Less than 8.33%	Less than or equal to 2%	Greater than 48 inches	1	4	97
2124	10/14/2015	Sandt DOT	Portsmouth	Rt 1	Perpendicular	Concrete	Good	Yes	Yes	Yes	No	No	No	Yes	Yes	NA	Yes	Less than 8.33%	Less than or equal to 2%	Greater than 48 inches	1	4	97
2125	10/14/2015	Sandt DOT	Portsmouth	Rt 1	Perpendicular	Concrete	Good	Yes	Yes	Yes	No	No	No	Yes	Yes	NA	Yes	Less than 8.33%	Less than or equal to 2%	Greater than 48 inches	1	4	97
66	6/17/2015	Sandt DOT	Allenstown	Main	Diagonal	Concrete	Good	Yes	Yes	Yes	No	No	No	Yes	Yes	Yes	Yes	Less than 8.33%	Less than or equal to 2%	Greater than 48 inches	1	4	97
2088	10/8/2015	Sandt DOT	Durham	Dover Road	Perpendicular	Concrete	Good	Yes	Yes	Yes	No	No	No	Yes	Yes	NA	Yes	Less than 8.33%	Less than or equal to 2%	Greater than 48 inches	1	4	97
1981	10/5/2015	Sandt DOT	Rochester	Gonic Road	Parallel	Concrete	Good	Yes	Yes	Yes	No	No	No	Yes	Yes	NA	Yes	Less than 8.33%	Less than or equal to 2%	Greater than 48 inches	1	4	97
1983	10/5/2015	Sandt DOT	Rochester	Gonic Road	Parallel	Concrete	Good	Yes	Yes	Yes	No	No	No	Yes	Yes	NA	Yes	Less than 8.33%	Less than or equal to 2%	Greater than 48 inches	1	4	97
1984	10/5/2015	Sandt DOT	Rochester	Gonic Road	Parallel	Concrete	Good	Yes	Yes	Yes	No	No	No	Yes	Yes	NA	Yes	Less than 8.33%	Less than or equal to 2%	Greater than 48 inches	1	4	97
1989	10/5/2015	Sandt DOT	Rochester	Gonic Road	Parallel	Concrete	Good	Yes	Yes	Yes	No	No	No	Yes	Yes	NA	Yes	Less than 8.33%	Less than or equal to 2%	Greater than 48 inches	1	4	97
1990	10/5/2015	Sandt DOT	Rochester	Gonic Road	Parallel	Concrete	Good	Yes	Yes	Yes	No	No	No	Yes	Yes	NA	Yes	Less than 8.33%	Less than or equal to 2%	Greater than 48 inches	1	4	97
1589	8/24/2015	Sandt DOT	Jaffrey	Main Street	Perpendicular	Concrete	Good	Yes	Yes	Yes	No	No	No	Yes	Yes	NA	Yes	Less than 8.33%	Less than or equal to 2%	Greater than 48 inches	1	4	97
183	7/6/2015	Sandt DOT	Manchester	S Willow Street	Perpendicular	Concrete	Good	Yes	Yes	Yes	No	No	No	Yes	Yes	NA	Yes	Less than 8.33%	Less than or equal to 2%	Greater than 48 inches	1	4	97
184	7/6/2015	Sandt DOT	Manchester	S Willow Street	Perpendicular	Concrete	Good	Yes	Yes	Yes	No	No	No	Yes	Yes	NA	Yes	Less than 8.33%	Less than or equal to 2%	Greater than 48 inches	1	4	97
2197	10/21/2015	Sandt DOT	Portsmouth	Market Street	Parallel	Concrete	Good	Yes	Yes	Yes	No	No	No	Yes	Yes	NA	Yes	Less than 8.33%	Less than or equal to 2%	Greater than 48 inches	1	4	97
2198	10/21/2015	Sandt DOT	Portsmouth	Market Street	Parallel	Concrete	Good	Yes	Yes	Yes	No	No	No	Yes	Yes	NA	Yes	Less than 8.33%	Less than or equal to 2%	Greater than 48 inches	1	4	97
2199	10/21/2015	Sandt DOT	Portsmouth	Market Street	Parallel	Concrete	Good	Yes	Yes	Yes	No	No	No	Yes	Yes	NA	Yes	Less than 8.33%	Less than or equal to 2%	Greater than 48 inches	1	4	97
2200	10/21/2015	Sandt DOT	Portsmouth	Market Street	Parallel	Concrete	Good	Yes	Yes	Yes	No	No	No	Yes	Yes	NA	Yes	Less than 8.33%	Less than or equal to 2%	Greater than 48 inches	1	4	97
2203	10/21/2015	Sandt DOT	Portsmouth	Market Street	Perpendicular	Concrete	Good	Yes	Yes	Yes	No	No	No	Yes	Yes	NA	Yes	Less than 8.33%	Less than or equal to 2%	Greater than 48 inches	1	4	97
80	6/22/2015	Sandt DOT	Hooksett	College Park	Diagonal	Concrete	Good	Yes	Yes	Yes	No	No	No	Yes	Yes	Yes	Yes	Less than 8.33%	Less than or equal to 2%	Greater than 48 inches	1	4	97
1904	9/30/2015	Sandt Dot	Conway	Main Street	Diagonal	Concrete	Good	Yes	Yes	Yes	No	No	No	Yes	Yes	Yes	Yes	Less than 8.33%	Less than or equal to 2%	Greater than 48 inches	1	4	97
1905	9/30/2015	Sandt Dot	Conway	Main Street	Parallel	Concrete	Good	Yes	Yes	Yes	No	No	No	Yes	Yes	NA	Yes	Less than 8.33%	Less than or equal to 2%	Greater than 48 inches	1	4	97
23	6/12/2015	Sandt DOT	Concord	Noble Drive	Parallel	Concrete	Good	Yes	Yes	Yes	No	No	No	Yes	Yes	NA	Yes	Less than 8.33%	Less than or equal to 2%	Greater than 48 inches	1	4	97
1536	8/17/2015	Sandt DOT	Bennington	Main Street	Perpendicular	Concrete	Good	Yes	Yes	Yes	No	No	No	Yes	Yes	NA	Yes	Less than 8.33%	Less than or equal to 2%	Greater than 48 inches	1	4	97
1539	8/17/2015	Sandt DOT	Bennington	Cross Street	Perpendicular	Concrete	Good	Yes	Yes	Yes	No	No	No	Yes	Yes	NA	Yes	Less than 8.33%	Less than or equal to 2%	Greater than 48 inches	1	4	97
1540	8/17/2015	Sandt DOT	Bennington	Main Street	Parallel	Concrete	Good	Yes	Yes	Yes	No	No	No	Yes	Yes	NA	Yes	Less than 8.33%	Less than or equal to 2%	Greater than 48 inches	1	4	97
1541	8/17/2015	Sandt DOT	Bennington	Main Street	Parallel	Concrete	Good	Yes	Yes	Yes	No	No	No	Yes	Yes	NA	Yes	Less than 8.33%	Less than or equal to 2%	Greater than 48 inches	1	4	97
1542	8/17/2015	Sandt DOT	Bennington	Main Street	Perpendicular	Concrete	Good	Yes	Yes	Yes	No	No	No	Yes	Yes	NA	Yes	Less than 8.33%	Less than or equal to 2%	Greater than 48 inches	1	4	97
1543	8/17/2015	Sandt DOT	Bennington	Main Street	Perpendicular	Concrete	Good	Yes	Yes	Yes	No	No	No	Yes	Yes	NA	Yes	Less than 8.33%	Less than or equal to 2%	Greater than 48 inches	1	4	97
1544	8/17/2015	Sandt DOT	Bennington	Main Street	Perpendicular	Concrete	Good	Yes	Yes	Yes	No	No	No	Yes	Yes	NA	Yes	Less than 8.33%	Less than or equal to 2%	Greater than 48 inches	1	4	97
2239	10/23/2015	Sandt DOT	Newmarket	Exeter Road	Parallel	Concrete	Good	Yes	Yes	Yes	No	No	No	Yes	Yes	NA	Yes	Less than 8.33%	Less than or equal to 2%	Greater than 48 inches	1	4	97
2240	10/23/2015	Sandt DOT	Newmarket	Exeter Road	Parallel	Concrete	Good	Yes	Yes	Yes	No	No	No	Yes	Yes	NA	Yes	Less than 8.33%	Less than or equal to 2%	Greater than 48 inches	1	4	97
2241	10/23/2015	Sandt DOT	Newmarket	Exeter Road	Parallel	Concrete	Good	Yes	Yes	Yes	No	No	No	Yes	Yes	NA	Yes	Less than 8.33%	Less than or equal to 2%	Greater than 48 inches	1	4	97
2242	10/23/2015	Sandt DOT	Newmarket	Exeter Road	Parallel	Concrete	Good	Yes	Yes	Yes	No	No	No	Yes	Yes	NA	Yes	Less than 8.33%	Less than or equal to 2%	Greater than 48 inches	1	4	97
2209	10/22/2015	Sandt DOT	Portsmouth	Woodbury Ave	Perpendicular	Concrete	Good	Yes	Yes	Yes	No	No	No	Yes	Yes	NA	Yes	Less than 8.33%	Less than or equal to 2%	Greater than 48 inches	1	4	97
2214	10/22/2015	Sandt DOT	Portsmouth	Woodbury Ave	Diagonal	Concrete	Good	Yes	Yes	Yes	No	No	No	Yes	Yes	NA	Yes	Less than 8.33%	Less than or equal to 2%	Greater than 48 inches	1	4	97
2215	10/22/2015	Sandt DOT	Portsmouth	Woodbury Ave	Perpendicular	Concrete	Good	Yes	Yes	Yes	No	No	No	Yes	Yes	NA	Yes	Less than 8.33%	Less than or equal to 2%	Greater than 48 inches	1	4	97
2216	10/22/2015	Sandt DOT	Portsmouth	Woodbury Ave	Diagonal	Concrete	Good	Yes	Yes	Yes	No	No	No	Yes	Yes	NA	Yes	Less than 8.33%	Less than or equal to 2%	Greater than 48 inches	1	4	97
2231	10/22/2015	Sandt DOT	Portsmouth	Pease Blvd	Diagonal	Concrete	Good	Yes	Yes	Yes	No	No	No	Yes	Yes	Yes	Yes	Less than 8.33%	Less than or equal to 2%	Greater than 48 inches	1	4	97
2232	10/22/2015	Sandt DOT	Portsmouth	Pease Blvd	Diagonal	Concrete	Good	Yes	Yes	Yes	No	No	No	Yes	Yes	Yes	Yes	Less than 8.33%	Less than or equal to 2%	Greater than 48 inches	1	4	97
2162	10/19/2015	Sandt DOT	Concord	South Street	Parallel	Concrete	Good	Yes	Yes	Yes	No	No	No	Yes	Yes	NA	Yes	Less than 8.33%	Less than or equal to 2%	Greater than 48 inches	1	4	97
2163	10/19/2015	Sandt DOT	Concord	South Street	Parallel	Concrete	Good	Yes	Yes	Yes	No	No	No	Yes	Yes	NA	Yes	Less than 8.33%	Less than or equal to 2%	Greater than 48 inches	1	4	97
2164	10/19/2015	Sandt DOT	Concord	South Street	Parallel	Concrete	Good	Yes	Yes	Yes	No	No	No	Yes	Yes	NA	Yes	Less than 8.33%	Less than or equal to 2%	Greater than 48 inches	1	4	97
2165	10/19/2015	Sandt DOT	Concord	South Street	Parallel	Concrete	Good	Yes	Yes	Yes	No	No	No	Yes	Yes	NA	Yes	Less than 8.33%	Less than or equal to 2%	Greater than 48 inches	1	4	97
2166	10/19/2015	Sandt DOT	Concord	South Street	Parallel	Concrete	Good	Yes	Yes	Yes	No	No	No	Yes	Yes	NA	Yes	Less than 8.33%	Less than or equal to 2%	Greater than 48 inches	1	4	97
2167	10/19/2015	Sandt DOT	Concord	South Street	Parallel	Concrete	Good	Yes	Yes	Yes	No	No	No	Yes	Yes	NA	Yes	Less than 8.33%	Less than or equal to 2%	Greater than 48 inches	1	4	97
2155	10/16/2015	Sandt DOT	Concord	Constitution Avenue	Perpendicular	Concrete	Good	Yes	Yes	Yes	No	No	No	Yes	Yes	NA	Yes	Less than 8.33%	Less than or equal to 2%	Greater than 48 inches	1	4	97
2051	10/7/2015	Sandt DOT	Newington	Gosling Road	Diagonal	Concrete	Good	Yes	Yes	Yes	No	No	No	Yes	Yes	Yes	Yes	Less than 8.33%	Less than or equal to 2%	Greater than 48 inches	1	4	97
2052	10/7/2015	Sandt DOT	Newington	Gosling Road	Diagonal	Concrete	Good	Yes	Yes	Yes	No	No	No	Yes	Yes	Yes	Yes	Less than 8.33%	Less than or equal to 2%	Greater than 48 inches	1	4	97
2053	10/7/2015	Sandt DOT	Newington	Gosling Road	Diagonal	Concrete	Good	Yes	Yes	Yes	No	No	No	Yes	Yes	Yes	Yes	Less than 8.33%	Less than or equal to 2%	Greater than 48 inches	1	4	97
2054	10/7/2015	Sandt DOT	Newington	Gosling Road	Diagonal	Concrete	Good	Yes	Yes	Yes	No	No	No	Yes	Yes	Yes	Yes	Less than 8.33%	Less than or equal to 2%	Greater than 48 inches	1	4	97
2055	10/7/2015	Sandt DOT	Newington	Gosling Road	Diagonal	Concrete	Good	Yes	Yes	Yes	No	No	No	Yes	Yes	Yes	Yes	Less than 8.33%	Less than or equal to 2%	Greater than 48 inches	1	4	97
2056	10/7/2015	Sandt DOT	Newington	Gosling Road	Diagonal	Concrete	Good	Yes	Yes	Yes	No	No	No	Yes	Yes	Yes	Yes	Less than 8.33%	Less than or equal to 2%	Greater than 48 inches	1	4	97
1924	10/1/2015	Sandt DOT	Rochester	N Main	Perpendicular	Concrete	Good	Yes	Yes	Yes	No	No	No	Yes	Yes	NA	Yes	Less than 8.33%	Less than or equal to 2%	Greater than 48 inches	1	4	97
1925	10/1/2015	Sandt DOT	Rochester	N Main	Perpendicular	Concrete	Good	Yes	Yes	Yes	No	No	No	Yes	Yes	NA	Yes	Less than 8.33%	Less than or equal to 2%	Greater than 48 inches	1	4	97
1930	10/1/2015	Sandt DOT	Rochester	N Main	Perpendicular	Concrete	Good	Yes	Yes	Yes	No	No	No	Yes	Yes	NA	Yes	Less than 8.33%	Less than or equal to 2%	Greater than 48 inches	1	4	97

1931	10/1/2015	Sandt DOT	Rochester	N Main	Perpendicular	Concrete	Good	Yes	Yes	Yes	No	No	No	Yes	Yes	NA	Yes	Less than 8.33%	Less than or equal to 2%	Greater than 48 inches	1	4	97
1939	10/1/2015	Sandt DOT	Rochester	N Main	Perpendicular	Concrete	Good	Yes	Yes	Yes	No	No	No	Yes	Yes	NA	Yes	Less than 8.33%	Less than or equal to 2%	Greater than 48 inches	1	4	97
1940	10/1/2015	Sandt DOT	Rochester	N Main	Perpendicular	Concrete	Good	Yes	Yes	Yes	No	No	No	Yes	Yes	NA	Yes	Less than 8.33%	Less than or equal to 2%	Greater than 48 inches	1	4	97
1941	10/1/2015	Sandt DOT	Rochester	N Main	Perpendicular	Concrete	Good	Yes	Yes	Yes	No	No	No	Yes	Yes	NA	Yes	Less than 8.33%	Less than or equal to 2%	Greater than 48 inches	1	4	97
1942	10/1/2015	Sandt DOT	Rochester	N Main	Perpendicular	Concrete	Good	Yes	Yes	Yes	No	No	No	Yes	Yes	NA	Yes	Less than 8.33%	Less than or equal to 2%	Greater than 48 inches	1	4	97
1943	10/1/2015	Sandt DOT	Rochester	N Main	Perpendicular	Concrete	Good	Yes	Yes	Yes	No	No	No	Yes	Yes	NA	Yes	Less than 8.33%	Less than or equal to 2%	Greater than 48 inches	1	4	97
1944	10/1/2015	Sandt DOT	Rochester	N Main	Perpendicular	Concrete	Good	Yes	Yes	Yes	No	No	No	Yes	Yes	NA	Yes	Less than 8.33%	Less than or equal to 2%	Greater than 48 inches	1	4	97
1837	9/24/2015	Sandt DOT	Canaan	U.S. 4	Diagonal	Concrete	Good	Yes	Yes	Yes	No	No	No	Yes	Yes	Yes	Yes	Less than 8.33%	Less than or equal to 2%	Greater than 48 inches	1	4	97
1838	9/24/2015	Sandt DOT	Canaan	U.S. 4	Diagonal	Concrete	Good	Yes	Yes	Yes	No	No	No	Yes	Yes	Yes	Yes	Less than 8.33%	Less than or equal to 2%	Greater than 48 inches	1	4	97
1839	9/24/2015	Sandt DOT	Canaan	U.S. 4	Diagonal	Concrete	Good	Yes	Yes	Yes	No	No	No	Yes	Yes	Yes	Yes	Less than 8.33%	Less than or equal to 2%	Greater than 48 inches	1	4	97
1840	9/24/2015	Sandt DOT	Canaan	U.S. 4	Diagonal	Concrete	Good	Yes	Yes	Yes	No	No	No	Yes	Yes	Yes	Yes	Less than 8.33%	Less than or equal to 2%	Greater than 48 inches	1	4	97
1841	9/24/2015	Sandt DOT	Canaan	U.S. 4	Diagonal	Concrete	Good	Yes	Yes	Yes	No	No	No	Yes	Yes	Yes	Yes	Less than 8.33%	Less than or equal to 2%	Greater than 48 inches	1	4	97
1842	9/24/2015	Sandt DOT	Canaan	U.S. 4	Diagonal	Concrete	Good	Yes	Yes	Yes	No	No	No	Yes	Yes	Yes	Yes	Less than 8.33%	Less than or equal to 2%	Greater than 48 inches	1	4	97
1843	9/24/2015	Sandt DOT	Canaan	U.S. 4	Diagonal	Concrete	Good	Yes	Yes	Yes	No	No	No	Yes	Yes	Yes	Yes	Less than 8.33%	Less than or equal to 2%	Greater than 48 inches	1	4	97
1791	9/22/2015	Sandt DOT	Epping	Rt 125	Perpendicular	Concrete	Good	Yes	Yes	Yes	No	No	No	Yes	Yes	NA	Yes	Less than 8.33%	Less than or equal to 2%	Greater than 48 inches	1	4	97
1792	9/22/2015	Sandt DOT	Epping	Rt 125	Perpendicular	Concrete	Good	Yes	Yes	Yes	No	No	No	Yes	Yes	NA	Yes	Less than 8.33%	Less than or equal to 2%	Greater than 48 inches	1	4	97
1793	9/22/2015	Sandt DOT	Epping	Rt 125	Perpendicular	Concrete	Good	Yes	Yes	Yes	No	No	No	Yes	Yes	NA	Yes	Less than 8.33%	Less than or equal to 2%	Greater than 48 inches	1	4	97
1794	9/22/2015	Sandt DOT	Epping	Rt 125	Diagonal	Concrete	Good	Yes	Yes	Yes	No	No	No	Yes	Yes	Yes	Yes	Less than 8.33%	Less than or equal to 2%	Greater than 48 inches	1	4	97
1795	9/22/2015	Sandt DOT	Epping	Rt 125	Diagonal	Concrete	Good	Yes	Yes	Yes	No	No	No	Yes	Yes	Yes	Yes	Less than 8.33%	Less than or equal to 2%	Greater than 48 inches	1	4	97
1796	9/22/2015	Sandt DOT	Epping	Rt 125	Diagonal	Concrete	Good	Yes	Yes	Yes	No	No	No	Yes	Yes	Yes	Yes	Less than 8.33%	Less than or equal to 2%	Greater than 48 inches	1	4	97
1797	9/22/2015	Sandt DOT	Epping	Rt 125	Perpendicular	Concrete	Good	Yes	Yes	Yes	No	No	No	Yes	Yes	Yes	Yes	Less than 8.33%	Less than or equal to 2%	Greater than 48 inches	1	4	97
1798	9/22/2015	Sandt DOT	Epping	Rt 125	Perpendicular	Concrete	Good	Yes	Yes	Yes	No	No	No	Yes	Yes	Yes	Yes	Less than 8.33%	Less than or equal to 2%	Greater than 48 inches	1	4	97
1799	9/22/2015	Sandt DOT	Epping	Rt 125	Diagonal	Concrete	Good	Yes	Yes	Yes	No	No	No	Yes	Yes	Yes	Yes	Less than 8.33%	Less than or equal to 2%	Greater than 48 inches	1	4	97
1800	9/22/2015	Sandt DOT	Epping	Rt 125	Perpendicular	Concrete	Good	Yes	Yes	Yes	No	No	No	Yes	Yes	Yes	Yes	Less than 8.33%	Less than or equal to 2%	Greater than 48 inches	1	4	97
1801	9/22/2015	Sandt DOT	Epping	Rt 125	Perpendicular	Concrete	Good	Yes	Yes	Yes	No	No	No	Yes	Yes	Yes	Yes	Less than 8.33%	Less than or equal to 2%	Greater than 48 inches	1	4	97
1802	9/22/2015	Sandt DOT	Epping	Rt 125	Diagonal	Concrete	Good	Yes	Yes	Yes	No	No	No	Yes	Yes	Yes	Yes	Less than 8.33%	Less than or equal to 2%	Greater than 48 inches	1	4	97
1803	9/22/2015	Sandt DOT	Epping	Rt 125	Diagonal	Concrete	Good	Yes	Yes	Yes	No	No	No	Yes	Yes	Yes	Yes	Less than 8.33%	Less than or equal to 2%	Greater than 48 inches	1	4	97
1782	9/21/2015	Sandt DOT	Hanover	Rt 10	Perpendicular	Concrete	Good	Yes	Yes	Yes	No	No	No	Yes	Yes	NA	Yes	Less than 8.33%	Less than or equal to 2%	Greater than 48 inches	1	4	97
1672	9/3/2015	Sandt DOT	Swanzey	Rt 10	Parallel	Concrete	Good	Yes	Yes	Yes	No	No	No	Yes	Yes	NA	Yes	Less than 8.33%	Less than or equal to 2%	Greater than 48 inches	1	4	97
1673	9/3/2015	Sandt DOT	Swanzey	Rt 10	Parallel	Concrete	Good	Yes	Yes	Yes	No	No	No	Yes	Yes	NA	Yes	Less than 8.33%	Less than or equal to 2%	Greater than 48 inches	1	4	97
1674	9/3/2015	Sandt DOT	Swanzey	Rt 10	Parallel	Concrete	Good	Yes	Yes	Yes	No	No	No	Yes	Yes	NA	Yes	Less than 8.33%	Less than or equal to 2%	Greater than 48 inches	1	4	97
1675	9/3/2015	Sandt DOT	Swanzey	Rt 10	Parallel	Concrete	Good	Yes	Yes	Yes	No	No	No	Yes	Yes	NA	Yes	Less than 8.33%	Less than or equal to 2%	Greater than 48 inches	1	4	97
1621	8/28/2015	Sandt DOT	Troy	South Main	Perpendicular	Concrete	Good	Yes	Yes	Yes	No	No	No	Yes	Yes	NA	Yes	Less than 8.33%	Less than or equal to 2%	Greater than 48 inches	1	4	97
1623	8/28/2015	Sandt DOT	Troy	South Main	Perpendicular	Concrete	Good	Yes	Yes	Yes	No	No	No	Yes	Yes	NA	Yes	Less than 8.33%	Less than or equal to 2%	Greater than 48 inches	1	4	97
1624	8/28/2015	Sandt DOT	Troy	Central Square	Perpendicular	Concrete	Good	Yes	Yes	Yes	No	No	No	Yes	Yes	NA	Yes	Less than 8.33%	Less than or equal to 2%	Greater than 48 inches	1	4	97
1627	8/28/2015	Sandt DOT	Troy	Central Square	Perpendicular	Concrete	Good	Yes	Yes	Yes	No	No	No	Yes	Yes	NA	Yes	Less than 8.33%	Less than or equal to 2%	Greater than 48 inches	1	4	97
1628	8/28/2015	Sandt DOT	Troy	Central Square	Parallel	Concrete	Good	Yes	Yes	Yes	No	No	No	Yes	Yes	NA	Yes	Less than 8.33%	Less than or equal to 2%	Greater than 48 inches	1	4	97
1601	8/26/2015	Sandt DOT	Concord	South Street	Perpendicular	Concrete	Good	Yes	Yes	Yes	No	No	No	Yes	Yes	NA	Yes	Less than 8.33%	Less than or equal to 2%	Greater than 48 inches	1	4	97
1602	8/26/2015	Sandt DOT	Concord	South Street	Perpendicular	Concrete	Good	Yes	Yes	Yes	No	No	No	Yes	Yes	NA	Yes	Less than 8.33%	Less than or equal to 2%	Greater than 48 inches	1	4	97
1603	8/26/2015	Sandt DOT	Concord	South Street	Perpendicular	Concrete	Good	Yes	Yes	Yes	No	No	No	Yes	Yes	NA	Yes	Less than 8.33%	Less than or equal to 2%	Greater than 48 inches	1	4	97
1604	8/26/2015	Sandt DOT	Concord	South Street	Perpendicular	Concrete	Good	Yes	Yes	Yes	No	No	No	Yes	Yes	NA	Yes	Less than 8.33%	Less than or equal to 2%	Greater than 48 inches	1	4	97
1605	8/26/2015	Sandt DOT	Concord	South Street	Perpendicular	Concrete	Good	Yes	Yes	Yes	No	No	No	Yes	Yes	NA	Yes	Less than 8.33%	Less than or equal to 2%	Greater than 48 inches	1	4	97
1595	8/24/2015	Sandt DOT	Jaffrey	Main Street	Diagonal	Concrete	Good	Yes	Yes	Yes	No	No	No	Yes	Yes	Yes	Yes	Less than 8.33%	Less than or equal to 2%	Greater than 48 inches	1	4	97
1596	8/24/2015	Sandt DOT	Jaffrey	Main Street	Diagonal	Concrete	Good	Yes	Yes	Yes	No	No	No	Yes	Yes	Yes	Yes	Less than 8.33%	Less than or equal to 2%	Greater than 48 inches	1	4	97
1597	8/24/2015	Sandt DOT	Jaffrey	Main Street	Diagonal	Concrete	Good	Yes	Yes	Yes	No	No	No	Yes	Yes	Yes	Yes	Less than 8.33%	Less than or equal to 2%	Greater than 48 inches	1	4	97
1598	8/24/2015	Sandt DOT	Jaffrey	Main Street	Diagonal	Concrete	Good	Yes	Yes	Yes	No	No	No	Yes	Yes	Yes	Yes	Less than 8.33%	Less than or equal to 2%	Greater than 48 inches	1	4	97
1559	8/18/2015	Sandt DOT	Greenfield	Forest	Perpendicular	Concrete	Good	Yes	Yes	Yes	No	No	No	Yes	Yes	NA	Yes	Less than 8.33%	Less than or equal to 2%	Greater than 48 inches	1	4	97
1551	8/17/2015	Sandt DOT	Bennington	Main Street	Perpendicular	Concrete	Good	Yes	Yes	Yes	No	No	No	Yes	Yes	NA	Yes	Less than 8.33%	Less than or equal to 2%	Greater than 48 inches	1	4	97
1515	8/14/2015	Sandt DOT	Francestown	Main Street	Perpendicular	Concrete	Good	Yes	Yes	Yes	No	No	No	Yes	Yes	NA	Yes	Less than 8.33%	Less than or equal to 2%	Greater than 48 inches	1	4	97
1503	8/13/2015	Sandt DOT	Wilton	Main Street	Diagonal	Concrete	Good	Yes	Yes	Yes	No	No	No	Yes	Yes	Yes	Yes	Less than 8.33%	Less than or equal to 2%	Greater than 48 inches	1	4	97
1504	8/13/2015	Sandt DOT	Wilton	Main Street	Perpendicular	Concrete	Good	Yes	Yes	Yes	No	No	No	Yes	Yes	Yes	Yes	Less than 8.33%	Less than or equal to 2%	Greater than 48 inches	1	4	97
1455	8/10/2015	Sandt DOT	Hillsborough	W Main Street	Parallel	Concrete	Good	Yes	Yes	Yes	No	No	No	Yes	Yes	NA	Yes	Less than 8.33%	Less than or equal to 2%	Greater than 48 inches	1	4	97
1456	8/10/2015	Sandt DOT	Hillsborough	W Main Street	Parallel	Concrete	Good	Yes	Yes	Yes	No	No	No	Yes	Yes	NA	Yes	Less than 8.33%	Less than or equal to 2%	Greater than 48 inches	1	4	97
1424	8/7/2015	Sandt DOT	Goffstown	Main Street	Perpendicular	Concrete	Good	Yes	Yes	Yes	No	No	No	Yes	Yes	NA	Yes	Less than 8.33%	Less than or equal to 2%	Greater than 48 inches	1	4	97
1428	8/7/2015	Sandt DOT	Goffstown	Main Street	Combined	Concrete	Good	Yes	Yes	Yes	No	No	No	Yes	Yes	NA	Yes	Less than 8.33%	Less than or equal to 2%	Greater than 48 inches	1	4	97
1429	8/7/2015	Sandt DOT	Goffstown	Main Street	Combined	Concrete	Good	Yes	Yes	Yes	No	No	No	Yes	Yes	NA	Yes	Less than 8.33%	Less than or equal to 2%	Greater than 48 inches	1	4	97
1411	8/5/2015	Sandt DOT	Boscawen	N Main	Parallel	Concrete	Good	Yes	Yes	Yes	No	No	No	Yes	Yes	NA	Yes	Less than 8.33%	Less than or equal to 2%	Greater than 48 inches	1	4	97
1412	8/5/2015	Sandt DOT	Boscawen	N Main	Combined	Concrete	Good	Yes	Yes	Yes	No	No	No	Yes	Yes	NA	Yes	Less than 8.33%	Less than or equal to 2%	Greater than 48 inches	1	4	97
1413	8/5/2015	Sandt DOT	Boscawen	King Street	Parallel	Concrete	Good	Yes	Yes	Yes	No	No	No	Yes	Yes	NA	Yes	Less than 8.33%	Less than or equal to 2%	Greater than 48 inches	1	4	97
1414	8/5/2015	Sandt DOT	Boscawen	King Street	Parallel	Concrete	Good	Yes	Yes	Yes	No	No	No	Yes	Yes	NA	Yes	Less than 8.33%	Less than or equal to 2%	Greater than 48 inches	1	4	97
1415	8/5/2015	Sandt DOT	Boscawen	King Street	Diagonal	Concrete	Good	Yes	Yes	Yes	No	No	No	Yes	Yes	NA	Yes	Less than 8.33%	Less than or equal to 2%	Greater than 48 inches	1	4	97
1416	8/5/2015	Sandt DOT	Boscawen	King Street	Perpendicular	Concrete	Good	Yes	Yes	Yes	No	No	No	Yes	Yes	NA	Yes	Less than 8.33%	Less than or equal to 2%	Greater than 48 inches	1	4	97
1417	8/5/2015	Sandt DOT	Boscawen	King Street	Perpendicular	Concrete	Good	Yes	Yes	Yes	No	No	No	Yes	Yes	NA	Yes	Less than 8.33%	Less than or equal to 2%	Greater than 48 inches	1	4	97
1418	8/5/2015	Sandt DOT	Boscawen	King Street	Diagonal	Concrete	Good	Yes	Yes	Yes	No	No	No	Yes	Yes	NA	Yes	Less than 8.33%	Less than or equal to 2%	Greater than 48 inches	1	4	97
1419	8/5/2015	Sandt DOT	Boscawen	King Street	Perpendicular	Concrete	Good	Yes	Yes	Yes	No	No	No	Yes	Yes	NA	Yes	Less than 8.33%	Less than or equal to 2%	Greater than 48 inches	1	4	97
1420	8/5/2015	Sandt DOT	Boscawen	King Street	Diagonal	Concrete	Good	Yes	Yes	Yes	No	No	No	Yes	Yes	NA	Yes	Less than 8.33%	Less than or equal to 2%	Greater than 48 inches	1	4	97
366	7/16/2015	Sandt DOT	Windham	111	Perpendicular	Concrete	Good	Yes	Yes	Yes	No	No	No	Yes	Yes	NA	Yes	Less than 8.33%	Less than or equal to 2%	Greater than 48 inches	1	4	97
367	7/16/2015	Sandt DOT	Windham	111	Perpendicular	Concrete	Good	Yes	Yes	Yes	No	No	No	Yes	Yes	NA	Yes	Less than 8.33%	Less than or equal to 2%	Greater than 48 inches	1	4	97
368	7/16/2015	Sandt DOT	Windham	111	Perpendicular	Concrete	Good	Yes	Yes	Yes	No	No	No	Yes	Yes	NA	Yes	Less than 8.33%	Less than or equal to 2%	Greater than 48 inches	1	4	97
369	7/16/2015	Sandt DOT	Windham	111	Perpendicular	Concrete	Good	Yes	Yes	Yes	No	No	No	Yes	Yes	NA	Yes	Less than 8.33%	Less than or equal to 2%	Greater than 48 inches	1	4	97
370	7/16/2015	Sandt DOT	Windham	111	Perpendicular	Concrete	Good	Yes	Yes	Yes	No	No	No	Yes	Yes	NA	Yes	Less than 8.33%	Less than or equal to 2%	Greater than 48 inches	1	4	97
210	7/7/2015	Sandt DOT	Concord	Foundry Street	Parallel	Concrete	Good	Yes	Yes	Yes	No	No	No	Yes	Yes	NA	Yes	Less than 8.33%	Less than or equal to 2%	Greater than 48 inches	1	4	97
211	7/7/2015	Sandt DOT	Concord	Foundry Street	Parallel	Concrete	Good	Yes	Yes	Yes	No	No	No	Yes	Yes	NA	Yes	Less than 8.33%	Less than or equal to 2%	Greater than 48 inches	1	4	97
196	7/6/2015	Sandt DOT	Manchester	S Willow Street	Perpendicular	Concrete	Good	Yes	Yes	Yes	No	No	No	Yes	Yes	NA	Yes	Less than 8.33%	Less than or equal to 2%	Greater than 48 inches	1	4	97
197	7/6/2015	Sandt DOT	Manchester	S Willow Street	Perpendicular	Concrete	Good	Yes	Yes	Yes	No	No	No	Yes	Yes	NA	Yes	Less than 8.33%	Less than or equal to 2%	Greater than 48 inches	1	4	97
198	7/6/2015	Sandt DOT	Manchester	S Willow Street	Perpendicular	Concrete	Good	Yes	Yes	Yes	No	No	No	Yes	Yes	NA	Yes	Less than 8.33%	Less than or equal to 2%	Greater than 48 inches	1	4	97
138	6/29/2015	Sandt DOT	Portsmouth	International Drive	Diagonal	Concrete	Good	Yes	Yes	Yes	No	No	No	Yes	Yes	Yes	Yes	Less than 8.33%	Less than or equal to 2%	Greater than 48 inches	1	4	97
55	6/17/2015	Sandt DOT	Pembroke	Broadway	Parallel	Concrete	Good	Yes	Yes	Yes	No	No	No	Yes	Yes	NA	Yes	Less than 8.33%	Less than or equal to 2%	Greater than 48 inches	1	4	97
51	6/16/2015	Sandt DOT	Pembroke	Broadway	Diagonal	Concrete	Good	Yes	Yes	Yes	No	No	No	Yes	Yes	Yes	Yes	Less than 8.33%	Less than or equal to 2%	Greater than 48 inches	1	4	97
361	7/16/2015	Sandt DOT	Windham	111	Diagonal	Concrete	Good	Yes	Yes	Yes	No	No	No	Yes	Yes	NA	Yes	Less than 8.33%	Less than or equal to 2%	Greater than 48 inches	1	4	97
2191	10/21/2015	Sandt DOT	Portsmouth	Market Street	Parallel	Concrete	Good	Yes	Yes	Yes	No	No	No	Yes	Yes	NA	Yes	Less than 8.33%	Less than or equal to 2%	Greater than 48 inches	1	4	97
2195	10/21/2015	Sandt DOT	Portsmouth	Market Street	Perpendicular	Concrete	Good	Yes	Yes	Yes	No	No	No	Yes	Yes	NA	Yes	Less than 8.33%	Less than or equal to 2%	Greater than 48 inches	1	4	97
2196	10/21/2015	Sandt DOT	Portsmouth	Market Street	Parallel	Concrete	Good	Yes	Yes	Yes	No	No	No	Yes	Yes	NA	Yes	Less than 8.33%	Less than or equal to 2%	Greater than 48 inches	1	4	97
1971	10/2/2015	Sandt DOT	Rochester	Gonic Road	Diagonal	Concrete	Good	Yes	Yes	Yes	No	No	No	Yes	Yes	Yes	Yes	Less than 8.33%	Less than or equal to 2%	Greater than 48 inches	1	4	97
1972	10/2/2015	Sandt DOT	Rochester	Gonic Road	Diagonal	Concrete	Good	Yes	Yes	Yes	No	No	No	Yes	Yes	Yes	Yes	Less than 8.33%	Less than or equal to 2%	Greater than 48 inches	1	4	97
1974	10/2/2015	Sandt DOT	Rochester	Gonic Road	Parallel	Concrete	Good	Yes	Yes	Yes	No	No	No	Yes	Yes	NA	Yes	Less than 8.33%	Less than or equal to 2%	Greater than 48 inches	1	4	97
1975	10/2/2015	Sandt DOT	Rochester	Gonic Road	Perpendicular	Concrete	Good	Yes	Yes	Yes	No	No	No	Yes	Yes	NA	Yes	Less than 8.33%	Less than or equal to 2%	Greater than 48 inches	1	4	97
1443	8/7/2015	Sandt DOT	Goffstown	N Mast Street	Parallel	Concrete	Good	Yes	Yes	Yes	No	No	No	Yes	Yes	Yes	Yes	Less than 8.33%	Less than or equal to 2%	Greater than 48 inches	1	4	97
1444	8/7/2015	Sandt DOT	Goffstown	N Mast Street	Parallel	Concrete	Good	Yes	Yes	Yes	No	No	No	Yes	Yes	Yes	Yes	Less than 8.33%	Less than or equal to 2%	Greater than 48 inches	1	4	97
1445	8/7/2015	Sandt DOT	Goffstown	N Mast Street	Parallel	Concrete	Good	Yes	Yes	Yes	No	No	No	Yes	Yes	Yes	Yes	Less than 8.33%	Less than or equal to 2%	Greater than 48 inches	1	4	97
1446	8/7/2015	Sandt DOT	Goffstown	N Mast Street	Parallel	Concrete	Good	Yes	Yes	Yes	No	No	No	Yes	Yes	Yes	Yes	Less than 8.33%	Less than or equal to 2%	Greater than 48 inches	1	4	97
1227	7/20/2015	Sandt DOT	Chichester	US 202	Diagonal	Concrete	Good	Yes	Yes	Yes	No	No	No	Yes	Yes	Yes	Yes	Less than 8.33%	Less than or equal to 2%	Greater than 48 inches	1	4	97
1228	7/20/2015	Sandt DOT	Chichester	US 202	Perpendicular	Concrete	Good	Yes	Yes	Yes	No	No	No	Yes	Yes	Yes	Yes	Less than 8.33%	Less than or equal to 2%	Greater than 48 inches	1	4	97
346	7/15/2015	Sandt DOT	Windham	111	Diagonal	Concrete	Good	Yes	Yes	Yes	No	No	No	Yes	Yes	NA	Yes	Less than 8.33%	Less than or equal to 2%	Greater than 48 inches	1	4	97
347	7/15/2015	Sandt DOT	Windham	111	Perpendicular	Concrete	Good	Yes	Yes	Yes	No	No	No	Yes	Yes	NA	Yes	Less than 8.33%	Less than or equal to 2%	Greater than 48 inches	1	4	97
349	7/15/2015	Sandt DOT	Windham	111	Perpendicular	Concrete	Good	Yes	Yes	Yes	No	No	No	Yes	Yes	NA	Yes	Less than 8.33%	Less than or equal to 2%	Greater than 48 inches	1	4	97
350	7/15/2015	Sandt DOT	Windham	111	Perpendicular	Concrete	Good	Yes	Yes	Yes	No	No	No	Yes	Yes	NA	Yes	Less than 8.33%	Less than or equal to 2%	Greater than 48 inches	1	4	97
351	7/15/2015	Sandt DOT	Windham	111	Perpendicular	Concrete	Good	Yes	Yes	Yes	No	No	No	Yes	Yes	NA	Yes	Less than 8.33%	Less than or equal to 2%	Greater than 48 inches	1	4	97
352	7/15/2015	Sandt DOT	Windham	111	Perpendicular	Concrete	Good	Yes	Yes	Yes	No	No	No	Yes	Yes	NA	Yes	Less than 8.33%	Less than or equal to 2%	Greater than 48 inches	1	4	97
353	7/15/2015	Sandt DOT	Windham	111	Perpendicular	Concrete	Good	Yes	Yes	Yes	No	No	No	Yes	Yes	NA	Yes	Less than 8.33%	Less than or equal to 2%	Greater than 48 inches	1	4	97
354	7/15/2015	Sandt DOT	Windham	111	Perpendicular	Concrete	Good	Yes	Yes	Yes	No	No	No	Yes	Yes	NA	Yes	Less than 8.33%	Less than or equal to 2%	Greater than 48 inches	1	4	97
355	7/15/2015	Sandt DOT	Windham	111	Perpendicular	Concrete	Good	Yes	Yes	Yes	No	No	No	Yes	Yes	NA	Yes	Less than 8.33%	Less than or equal to 2%	Greater than 48 inches	1	4	97
356	7/15/2015	Sandt DOT	Windham	111	Perpendicular	Concrete	Good	Yes	Yes	Yes	No	No	No	Yes	Yes	NA	Yes	Less than 8.33%	Less than or equal to 2%	Greater than 48 inches	1	4	97
357	7/15/2015	Sandt DOT	Windham	111	Perpendicular	Concrete	Good	Yes	Yes	Yes	No	No	No	Yes	Yes	NA	Yes	Less than 8.33%	Less than or equal to 2%	Greater than 48 inches	1	4	97
358	7/15/2015	Sandt DOT	Windham	111	Perpendicular	Concrete	Good	Yes	Yes	Yes	No	No	No	Yes	Yes	NA	Yes	Less than 8.33%	Less than or equal to 2%	Greater than 48 inches	1	4	97
100	6/25/2015	Sandt DOT	Hooksett	W River	Parallel	Concrete	Good	Yes	Yes	Yes	No	No	No	Yes	Yes	NA	Yes	Less than 8.33%	Less than or equal to 2%	Greater than 48 inches	1	4	97
2104	10/14/2015	Sandt DOT	Portsmouth	Rt 1	Diagonal	Concrete	Good	Yes	Yes	Yes	No	No	No	Yes	Yes	Yes	Yes	Less than 8.33%	Less than or equal to 2%	Greater than 48 inches	1	4	97
2105	10/14/2015	Sandt DOT	Portsmouth	Rt 1	Parallel	Concrete	Good	Yes	Yes	Yes	No	No	No	Yes	Yes	NA	Yes	Less than 8.33%	Less than or equal to 2%	Greater than 48 inches	1	4	97
1712	9/4/2015	Sandt DOT	Marlborough	Rt 101	Perpendicular	Concrete	Good	Yes	Yes	Yes	No	No	No	Yes	Yes	NA	Yes	Less than 8.33%	Less than or equal to 2%	Greater than 48 inches	1	4	97
54	6/17/2015	Sandt DOT	Pembrokae	Broadway	Parallel	Concrete	Good	Yes	Yes	Yes	No	No	No	Yes	Yes	NA	Yes	Less than 8.33%	Less than or equal to 2%	Greater than 48 inches	1	4	97
2255	10/23/2015	Sandt DOT	Newmarket	Exeter Road	Parallel	Concrete	Good	Yes	Yes	Yes	No	No	No	Yes	Yes	NA	Yes	Less than 8.33%	Less than or equal to 2%	Greater than 48 inches	1	4	97
2256	10/23/2015	Sandt DOT	Newmarket	Main	Parallel	Concrete	Good	Yes	Yes	Yes	No	No	No	Yes	Yes	NA	Yes	Less than 8.33%	Less than or equal to 2%	Greater than 48 inches	1	4	97
2257	10/23/2015	Sandt DOT	Newmarket	Main	Parallel	Concrete	Good	Yes	Yes	Yes	No	No	No	Yes	Yes	NA	Yes	Less than 8.33%	Less than or equal to 2%	Greater than 48 inches	1	4	97

2259	10/23/2015	Sandt DOT	Newmarket	Main	Parallel	Concrete	Good	Yes	Yes	Yes	No	No	No	Yes	Yes	NA	Yes	Less than 8.33%	Less than or equal to 2%	Greater than 48 inches	1	4	97
2260	10/23/2015	Sandt DOT	Newmarket	Main	Perpendicular	Concrete	Good	Yes	Yes	Yes	No	No	No	Yes	Yes	NA	Yes	Less than 8.33%	Less than or equal to 2%	Greater than 48 inches	1	4	97
2261	10/23/2015	Sandt DOT	Newmarket	Main	Diagonal	Concrete	Good	Yes	Yes	Yes	No	No	No	Yes	Yes	NA	Yes	Less than 8.33%	Less than or equal to 2%	Greater than 48 inches	1	4	97
2262	10/23/2015	Sandt DOT	Newmarket	Main	Diagonal	Concrete	Good	Yes	Yes	Yes	No	No	No	Yes	Yes	NA	Yes	Less than 8.33%	Less than or equal to 2%	Greater than 48 inches	1	4	97
2265	10/23/2015	Sandt DOT	Newmarket	Main	Perpendicular	Concrete	Good	Yes	Yes	Yes	No	No	No	Yes	Yes	NA	Yes	Less than 8.33%	Less than or equal to 2%	Greater than 48 inches	1	4	97
2266	10/23/2015	Sandt DOT	Newmarket	Main	Perpendicular	Concrete	Good	Yes	Yes	Yes	No	No	No	Yes	Yes	NA	Yes	Less than 8.33%	Less than or equal to 2%	Greater than 48 inches	1	4	97
2268	10/23/2015	Sandt DOT	Newmarket	Main	Parallel	Concrete	Good	Yes	Yes	Yes	No	No	No	Yes	Yes	NA	Yes	Less than 8.33%	Less than or equal to 2%	Greater than 48 inches	1	4	97
2272	10/23/2015	Sandt DOT	Newmarket	Main	Parallel	Concrete	Good	Yes	Yes	Yes	No	No	No	Yes	Yes	NA	Yes	Less than 8.33%	Less than or equal to 2%	Greater than 48 inches	1	4	97
2273	10/23/2015	Sandt DOT	Newmarket	Main	Parallel	Concrete	Good	Yes	Yes	Yes	No	No	No	Yes	Yes	NA	Yes	Less than 8.33%	Less than or equal to 2%	Greater than 48 inches	1	4	97
2300	10/27/2015	Sandt DOT	Hampton	Ocean Blvd	Perpendicular	Concrete	Good	Yes	Yes	Yes	No	No	No	Yes	Yes	NA	Yes	Less than 8.33%	Less than or equal to 2%	Greater than 48 inches	1	4	97
2301	10/27/2015	Sandt DOT	Hampton	Ocean Blvd	Perpendicular	Concrete	Good	Yes	Yes	Yes	No	No	No	Yes	Yes	NA	Yes	Less than 8.33%	Less than or equal to 2%	Greater than 48 inches	1	4	97
2090	10/12/2015	Sandt DOT	Rye	Elwin Road	Perpendicular	Concrete	Good	Yes	Yes	Yes	No	No	No	Yes	Yes	NA	Yes	Less than 8.33%	Less than or equal to 2%	Greater than 48 inches	1	4	97
2091	10/12/2015	Sandt DOT	Rye	Elwin Road	Perpendicular	Concrete	Good	Yes	Yes	Yes	No	No	No	Yes	Yes	NA	Yes	Less than 8.33%	Less than or equal to 2%	Greater than 48 inches	1	4	97
2092	10/12/2015	Sandt DOT	Rye	Elwin Road	Perpendicular	Concrete	Good	Yes	Yes	Yes	No	No	No	Yes	Yes	NA	Yes	Less than 8.33%	Less than or equal to 2%	Greater than 48 inches	1	4	97
2093	10/12/2015	Sandt DOT	Rye	Rt 1A	Perpendicular	Concrete	Good	Yes	Yes	Yes	No	No	No	Yes	Yes	NA	Yes	Less than 8.33%	Less than or equal to 2%	Greater than 48 inches	1	4	97
2094	10/12/2015	Sandt DOT	Rye	Rt 1A	Perpendicular	Concrete	Good	Yes	Yes	Yes	No	No	No	Yes	Yes	NA	Yes	Less than 8.33%	Less than or equal to 2%	Greater than 48 inches	1	4	97
2095	10/12/2015	Sandt DOT	Rye	Rt 1A	Perpendicular	Concrete	Good	Yes	Yes	Yes	No	No	No	Yes	Yes	NA	Yes	Less than 8.33%	Less than or equal to 2%	Greater than 48 inches	1	4	97
2096	10/12/2015	Sandt DOT	Rye	Pioneer Road	Perpendicular	Concrete	Good	Yes	Yes	Yes	No	No	No	Yes	Yes	NA	Yes	Less than 8.33%	Less than or equal to 2%	Greater than 48 inches	1	4	97
2097	10/12/2015	Sandt DOT	Rye	Pioneer Road	Perpendicular	Concrete	Good	Yes	Yes	Yes	No	No	No	Yes	Yes	NA	Yes	Less than 8.33%	Less than or equal to 2%	Greater than 48 inches	1	4	97
2098	10/12/2015	Sandt DOT	Rye	Pioneer Road	Perpendicular	Concrete	Good	Yes	Yes	Yes	No	No	No	Yes	Yes	NA	Yes	Less than 8.33%	Less than or equal to 2%	Greater than 48 inches	1	4	97
2099	10/12/2015	Sandt DOT	Rye	Sagamore Road	Perpendicular	Concrete	Good	Yes	Yes	Yes	No	No	No	Yes	Yes	NA	Yes	Less than 8.33%	Less than or equal to 2%	Greater than 48 inches	1	4	97
2100	10/12/2015	Sandt DOT	Rye	Sagamore Road	Perpendicular	Concrete	Good	Yes	Yes	Yes	No	No	No	Yes	Yes	NA	Yes	Less than 8.33%	Less than or equal to 2%	Greater than 48 inches	1	4	97
2101	10/12/2015	Sandt DOT	Rye	Sagamore Road	Perpendicular	Concrete	Good	Yes	Yes	Yes	No	No	No	Yes	Yes	NA	Yes	Less than 8.33%	Less than or equal to 2%	Greater than 48 inches	1	4	97
1861	9/28/2015	Sandt DOT	Farmington	Central Street	Diagonal	Concrete	Good	Yes	Yes	Yes	No	No	No	Yes	Yes	Yes	Yes	Less than 8.33%	Less than or equal to 2%	Greater than 48 inches	1	4	97
1862	9/28/2015	Sandt DOT	Farmington	Central Street	Diagonal	Concrete	Good	Yes	Yes	Yes	No	No	No	Yes	Yes	Yes	Yes	Less than 8.33%	Less than or equal to 2%	Greater than 48 inches	1	4	97
1863	9/28/2015	Sandt DOT	Farmington	Central Street	Diagonal	Concrete	Good	Yes	Yes	Yes	No	No	No	Yes	Yes	Yes	Yes	Less than 8.33%	Less than or equal to 2%	Greater than 48 inches	1	4	97
1864	9/28/2015	Sandt DOT	Farmington	Central Street	Perpendicular	Concrete	Good	Yes	Yes	Yes	No	No	No	Yes	Yes	NA	Yes	Less than 8.33%	Less than or equal to 2%	Greater than 48 inches	1	4	97
1865	9/28/2015	Sandt DOT	Farmington	Central Street	Parallel	Concrete	Good	Yes	Yes	Yes	No	No	No	Yes	Yes	NA	Yes	Less than 8.33%	Less than or equal to 2%	Greater than 48 inches	1	4	97
1812	9/23/2015	Sandt DOT	Lebanon	Rt 120	Perpendicular	Concrete	Good	Yes	Yes	Yes	No	No	No	Yes	Yes	NA	Yes	Less than 8.33%	Less than or equal to 2%	Greater than 48 inches	1	4	97
1813	9/23/2015	Sandt DOT	Lebanon	Rt 120	Perpendicular	Concrete	Good	Yes	Yes	Yes	No	No	No	Yes	Yes	NA	Yes	Less than 8.33%	Less than or equal to 2%	Greater than 48 inches	1	4	97
1814	9/23/2015	Sandt DOT	Lebanon	Rt 120	Perpendicular	Concrete	Good	Yes	Yes	Yes	No	No	No	Yes	Yes	NA	Yes	Less than 8.33%	Less than or equal to 2%	Greater than 48 inches	1	4	97
1815	9/23/2015	Sandt DOT	Lebanon	Rt 120	Perpendicular	Concrete	Good	Yes	Yes	Yes	No	No	No	Yes	Yes	NA	Yes	Less than 8.33%	Less than or equal to 2%	Greater than 48 inches	1	4	97
1427	8/7/2015	Sandt DOT	Goffstown	Main Street	Diagonal	Concrete	Good	Yes	Yes	Yes	No	No	No	Yes	Yes	Yes	Yes	Less than 8.33%	Less than or equal to 2%	Greater than 48 inches	1	4	97
187	7/6/2015	Sandt DOT	Manchester	S Willow Street	Perpendicular	Concrete	Good	Yes	Yes	Yes	No	No	No	Yes	Yes	NA	Yes	Less than 8.33%	Less than or equal to 2%	Greater than 48 inches	1	4	97
188	7/6/2015	Sandt DOT	Manchester	S Willow Street	Perpendicular	Concrete	Good	Yes	Yes	Yes	No	No	No	Yes	Yes	NA	Yes	Less than 8.33%	Less than or equal to 2%	Greater than 48 inches	1	4	97
190	7/6/2015	Sandt DOT	Manchester	S Willow Street	Perpendicular	Concrete	Good	Yes	Yes	Yes	No	No	No	Yes	Yes	NA	Yes	Less than 8.33%	Less than or equal to 2%	Greater than 48 inches	1	4	97
191	7/6/2015	Sandt DOT	Manchester	S Willow Street	Perpendicular	Concrete	Good	Yes	Yes	Yes	No	No	No	Yes	Yes	NA	Yes	Less than 8.33%	Less than or equal to 2%	Greater than 48 inches	1	4	97
192	7/6/2015	Sandt DOT	Manchester	S Willow Street	Perpendicular	Concrete	Good	Yes	Yes	Yes	No	No	No	Yes	Yes	NA	Yes	Less than 8.33%	Less than or equal to 2%	Greater than 48 inches	1	4	97
139	6/29/2015	Sandt DOT	Portsmouth	International Drive	Parallel	Concrete	Good	Yes	Yes	Yes	No	No	No	Yes	Yes	NA	Yes	Less than 8.33%	Less than or equal to 2%	Greater than 48 inches	1	4	97
140	6/29/2015	Sandt DOT	Portsmouth	Pease	Perpendicular	Concrete	Good	Yes	Yes	Yes	No	No	No	Yes	Yes	NA	Yes	Less than 8.33%	Less than or equal to 2%	Greater than 48 inches	1	4	97
141	6/29/2015	Sandt DOT	Portsmouth	International Drive	Perpendicular	Concrete	Good	Yes	Yes	Yes	No	No	No	Yes	Yes	NA	Yes	Less than 8.33%	Less than or equal to 2%	Greater than 48 inches	1	4	97
142	6/29/2015	Sandt DOT	Portsmouth	International Drive	Perpendicular	Concrete	Good	Yes	Yes	Yes	No	No	No	Yes	Yes	NA	Yes	Less than 8.33%	Less than or equal to 2%	Greater than 48 inches	1	4	97
86	6/22/2015	Sandt DOT	Hooksett	Hooksett rest area southbound	Perpendicular	Concrete	Good	Yes	Yes	Yes	No	No	No	Yes	Yes	NA	Yes	Less than 8.33%	Less than or equal to 2%	Greater than 48 inches	1	4	97
2071	10/8/2015	Sandt DOT	Durham	Main Street	Diagonal	Concrete	Good	Yes	Yes	Yes	No	No	No	Yes	Yes	Yes	Yes	Less than 8.33%	Less than or equal to 2%	Greater than 48 inches	1	4	97
1883	9/29/2015	Sandt DOT	Durham	Main Street	Perpendicular	Concrete	Good	Yes	Yes	Yes	No	No	No	Yes	Yes	NA	Yes	Less than 8.33%	Less than or equal to 2%	Greater than 48 inches	1	4	97
1884	9/29/2015	Sandt DOT	Durham	Main Street	Perpendicular	Concrete	Good	Yes	Yes	Yes	No	No	No	Yes	Yes	NA	Yes	Less than 8.33%	Less than or equal to 2%	Greater than 48 inches	1	4	97
1886	9/29/2015	Sandt DOT	Durham	Main Street	Perpendicular	Concrete	Good	Yes	Yes	Yes	No	No	No	Yes	Yes	NA	Yes	Less than 8.33%	Less than or equal to 2%	Greater than 48 inches	1	4	97
1888	9/29/2015	Sandt DOT	Durham	Main Street	Perpendicular	Concrete	Good	Yes	Yes	Yes	No	No	No	Yes	Yes	NA	Yes	Less than 8.33%	Less than or equal to 2%	Greater than 48 inches	1	4	97
1889	9/29/2015	Sandt DOT	Durham	Main Street	Perpendicular	Concrete	Good	Yes	Yes	Yes	No	No	No	Yes	Yes	NA	Yes	Less than 8.33%	Less than or equal to 2%	Greater than 48 inches	1	4	97
1890	9/29/2015	Sandt DOT	Durham	Main Street	Diagonal	Concrete	Good	Yes	Yes	Yes	No	No	No	Yes	Yes	Yes	Yes	Less than 8.33%	Less than or equal to 2%	Greater than 48 inches	1	4	97
1891	9/29/2015	Sandt DOT	Durham	Main Street	Perpendicular	Concrete	Good	Yes	Yes	Yes	No	No	No	Yes	Yes	NA	Yes	Less than 8.33%	Less than or equal to 2%	Greater than 48 inches	1	4	97
1893	9/29/2015	Sandt DOT	Durham	Main Street	Diagonal	Concrete	Good	Yes	Yes	Yes	No	No	No	Yes	Yes	Yes	Yes	Less than 8.33%	Less than or equal to 2%	Greater than 48 inches	1	4	97
1894	9/29/2015	Sandt DOT	Durham	Main Street	Perpendicular	Concrete	Good	Yes	Yes	Yes	No	No	No	Yes	Yes	NA	Yes	Less than 8.33%	Less than or equal to 2%	Greater than 48 inches	1	4	97
1895	9/29/2015	Sandt DOT	Durham	Main Street	Perpendicular	Concrete	Good	Yes	Yes	Yes	No	No	No	Yes	Yes	NA	Yes	Less than 8.33%	Less than or equal to 2%	Greater than 48 inches	1	4	97
1896	9/29/2015	Sandt DOT	Durham	Main Street	Perpendicular	Concrete	Good	Yes	Yes	Yes	No	No	No	Yes	Yes	NA	Yes	Less than 8.33%	Less than or equal to 2%	Greater than 48 inches	1	4	97
1897	9/29/2015	Sandt DOT	Durham	Main Street	Perpendicular	Concrete	Good	Yes	Yes	Yes	No	No	No	Yes	Yes	NA	Yes	Less than 8.33%	Less than or equal to 2%	Greater than 48 inches	1	4	97
1898	9/29/2015	Sandt DOT	Durham	Main Street	Diagonal	Concrete	Good	Yes	Yes	Yes	No	No	No	Yes	Yes	Yes	Yes	Less than 8.33%	Less than or equal to 2%	Greater than 48 inches	1	4	97
1899	9/29/2015	Sandt DOT	Durham	Main Street	Diagonal	Concrete	Good	Yes	Yes	Yes	No	No	No	Yes	Yes	Yes	Yes	Less than 8.33%	Less than or equal to 2%	Greater than 48 inches	1	4	97
1422	8/7/2015	Sandt DOT	Goffstown	Main Street	Parallel	Concrete	Good	Yes	Yes	Yes	No	No	No	Yes	Yes	NA	Yes	Less than 8.33%	Less than or equal to 2%	Greater than 48 inches	1	4	97
1423	8/7/2015	Sandt DOT	Goffstown	Main Street	Perpendicular	Concrete	Good	Yes	Yes	Yes	No	No	No	Yes	Yes	NA	Yes	Less than 8.33%	Less than or equal to 2%	Greater than 48 inches	1	4	97
1426	8/7/2015	Sandt DOT	Goffstown	Main Street	Perpendicular	Concrete	Good	Yes	Yes	Yes	No	No	No	Yes	Yes	NA	Yes	Less than 8.33%	Less than or equal to 2%	Greater than 48 inches	1	4	97
1435	8/7/2015	Sandt DOT	Goffstown	Main Street	Perpendicular	Concrete	Good	Yes	Yes	Yes	No	No	No	Yes	Yes	NA	Yes	Less than 8.33%	Less than or equal to 2%	Greater than 48 inches	1	4	97
1436	8/7/2015	Sandt DOT	Goffstown	Main Street	Parallel	Concrete	Good	Yes	Yes	Yes	No	No	No	Yes	Yes	NA	Yes	Less than 8.33%	Less than or equal to 2%	Greater than 48 inches	1	4	97
2274	10/23/2015	Sandt DOT	Newmarket	Main Street	Parallel	Concrete	Good	Yes	Yes	Yes	No	No	No	Yes	Yes	NA	Yes	Less than 8.33%	Less than or equal to 2%	Greater than 48 inches	1	4	97
1764	9/17/2015	Sandt DOT	Newport	Rt 10	Parallel	Concrete	Good	Yes	Yes	Yes	No	No	No	Yes	Yes	Yes	Yes	Less than 8.33%	Less than or equal to 2%	Greater than 48 inches	1	4	97
1765	9/17/2015	Sandt DOT	Newport	Rt 10	Parallel	Concrete	Good	Yes	Yes	Yes	No	No	No	Yes	Yes	Yes	Yes	Less than 8.33%	Less than or equal to 2%	Greater than 48 inches	1	4	97
1766	9/17/2015	Sandt DOT	Newport	Rt 10	Combined	Concrete	Good	Yes	Yes	Yes	No	No	No	Yes	Yes	Yes	Yes	Less than 8.33%	Less than or equal to 2%	Greater than 48 inches	1	4	97
1767	9/17/2015	Sandt DOT	Newport	Rt 10	Parallel	Concrete	Good	Yes	Yes	Yes	No	No	No	Yes	Yes	Yes	Yes	Less than 8.33%	Less than or equal to 2%	Greater than 48 inches	1	4	97
1437	8/7/2015	Sandt DOT	Goffstown	Main Street	Parallel	Concrete	Good	Yes	Yes	Yes	No	No	No	Yes	Yes	NA	Yes	Less than 8.33%	Less than or equal to 2%	Greater than 48 inches	1	4	97
1438	8/7/2015	Sandt DOT	Goffstown	Main Street	Parallel	Concrete	Good	Yes	Yes	Yes	No	No	No	Yes	Yes	NA	Yes	Less than 8.33%	Less than or equal to 2%	Greater than 48 inches	1	4	97
360	7/16/2015	Sandt DOT	Windham	111	Perpendicular	Concrete	Good	Yes	Yes	Yes	No	No	No	Yes	Yes	NA	Yes	Less than 8.33%	Less than or equal to 2%	Greater than 48 inches	1	4	97
362	7/16/2015	Sandt DOT	Windham	111	Diagonal	Concrete	Good	Yes	Yes	Yes	No	No	No	Yes	Yes	NA	Yes	Less than 8.33%	Less than or equal to 2%	Greater than 48 inches	1	4	97
371	7/16/2015	Sandt DOT	Windham	111	Perpendicular	Concrete	Good	Yes	Yes	Yes	No	No	No	Yes	Yes	NA	Yes	Less than 8.33%	Less than or equal to 2%	Greater than 48 inches	1	4	97
1289	7/23/2015	Sandt DOT	Derry	E Broadway	Perpendicular	Concrete	Good	Yes	Yes	Yes	No	No	No	Yes	Yes	Yes	Yes	Less than 8.33%	Less than or equal to 2%	Greater than 48 inches	1	4	97
1290	7/23/2015	Sandt DOT	Derry	E Broadway	Diagonal	Concrete	Good	Yes	Yes	Yes	No	No	No	Yes	Yes	Yes	Yes	Less than 8.33%	Less than or equal to 2%	Greater than 48 inches	1	4	97
1291	7/23/2015	Sandt DOT	Derry	E Broadway	Perpendicular	Concrete	Good	Yes	Yes	Yes	No	No	No	Yes	Yes	Yes	Yes	Less than 8.33%	Less than or equal to 2%	Greater than 48 inches	1	4	97
1292	7/23/2015	Sandt DOT	Derry	E Broadway	Perpendicular	Concrete	Good	Yes	Yes	Yes	No	No	No	Yes	Yes	Yes	Yes	Less than 8.33%	Less than or equal to 2%	Greater than 48 inches	1	4	97
1255	7/22/2015	Sandt DOT	Derry	E Broadway	Diagonal	Concrete	Good	Yes	Yes	Yes	No	No	No	Yes	Yes	Yes	Yes	Less than 8.33%	Less than or equal to 2%	Greater than 48 inches	1	4	97
1256	7/22/2015	Sandt DOT	Derry	E Broadway	Diagonal	Concrete	Good	Yes	Yes	Yes	No	No	No	Yes	Yes	Yes	Yes	Less than 8.33%	Less than or equal to 2%	Greater than 48 inches	1	4	97
1257	7/22/2015	Sandt DOT	Derry	E Broadway	Perpendicular	Concrete	Good	Yes	Yes	Yes	No	No	No	Yes	Yes	Yes	Yes	Less than 8.33%	Less than or equal to 2%	Greater than 48 inches	1	4	97
1258	7/22/2015	Sandt DOT	Derry	E Broadway	Diagonal	Concrete	Good	Yes	Yes	Yes	No	No	No	Yes	Yes	Yes	Yes	Less than 8.33%	Less than or equal to 2%	Greater than 48 inches	1	4	97
1259	7/22/2015	Sandt DOT	Derry	E Broadway	Diagonal	Concrete	Good	Yes	Yes	Yes	No	No	No	Yes	Yes	Yes	Yes	Less than 8.33%	Less than or equal to 2%	Greater than 48 inches	1	4	97
1260	7/22/2015	Sandt DOT	Derry	E Broadway	Perpendicular	Concrete	Good	Yes	Yes	Yes	No	No	No	Yes	Yes	Yes	Yes	Less than 8.33%	Less than or equal to 2%	Greater than 48 inches	1	4	97
348	7/15/2015	Sandt DOT	Windham	111	Perpendicular	Concrete	Good	Yes	Yes	Yes	No	No	No	Yes	Yes	NA	Yes	Less than 8.33%	Less than or equal to 2%	Greater than 48 inches	1	4	97
1882	9/29/2015	Sandt DOT	Durham	Mast Road	Perpendicular	Concrete	Good	Yes	Yes	Yes	No	No	No	Yes	Yes	NA	Yes	Less than 8.33%	Less than or equal to 2%	Greater than 48 inches	1	4	97
2012	10/5/2015	Sandt DOT	Rollinsford	Front	Parallel	Concrete	Good	Yes	Yes	Yes	No	No	No	Yes	Yes	NA	Yes	Less than 8.33%	Less than or equal to 2%	Greater than 48 inches	1	4	97
162	7/2/2015	Sandt DOT	Manchester	Hanover Street	Diagonal	Concrete	Good	Yes	Yes	Yes	No	No	No	Yes	Yes	Yes	Yes	Less than 8.33%	Less than or equal to 2%	Greater than 48 inches	1	4	97
163	7/2/2015	Sandt DOT	Manchester	Hanover Street	Parallel	Concrete	Good	Yes	Yes	Yes	No	No	No	Yes	Yes	NA	Yes	Less than 8.33%	Less than or equal to 2%	Greater than 48 inches	1	4	97
2302	10/27/2015	Sandt DOT	Hampton	Ocean Blvd	Perpendicular	Concrete	Good	Yes	Yes	Yes	No	No	No	Yes	Yes	NA	Yes	Less than 8.33%	Less than or equal to 2%	Greater than 48 inches	1	4	97
1242	7/21/2015	Sandt DOT	Londonderry	Mammoth Road	Diagonal	Concrete	Good	Yes	Yes	Yes	No	No	No	Yes	Yes	Yes	Yes	Less than 8.33%	Less than or equal to 2%	Greater than 48 inches	1	4	97
364	7/16/2015	Sandt DOT	Windham	111	Perpendicular	Concrete	Good	Yes	Yes	Yes	No	No	No	Yes	Yes	NA	Yes	Less than 8.33%	Less than or equal to 2%	Greater than 48 inches	1	4	97
365	7/16/2015	Sandt DOT	Windham	111	Perpendicular	Concrete	Good	Yes	Yes	Yes	No	No	No	Yes	Yes	NA	Yes	Less than 8.33%	Less than or equal to 2%	Greater than 48 inches	1	4	97
372	7/16/2015	Sandt DOT	Windham	111	Diagonal	Concrete	Good	Yes	Yes	Yes	No	No	No	Yes	Yes	NA	Yes	Less than 8.33%	Less than or equal to 2%	Greater than 48 inches	1	4	97
374	7/16/2015	Sandt DOT	Windham	111	Perpendicular	Concrete	Good	Yes	Yes	Yes	No	No	No	Yes	Yes	NA	Yes	Less than 8.33%	Less than or equal to 2%	Greater than 48 inches	1	4	97
4039	2/29/2016	Sandt DOT	Seabrook	Rt 1	Perpendicular	Concrete	Good	Yes	Yes	Yes	No	No	No	Yes	Yes	NA	Yes	Less than 8.33%	Less than or equal to 2%	Greater than 48 inches	1	4	97
4040	2/29/2016	Sandt DOT	Seabrook	Rt 1	Perpendicular	Concrete	Good	Yes	Yes	Yes	No	No	No	Yes	Yes	NA	Yes	Less than 8.33%	Less than or equal to 2%	Greater than 48 inches	1	4	97
4041	2/29/2016	Sandt DOT	Seabrook	Rt 1	Perpendicular	Concrete	Good	Yes	Yes	Yes	No	No	No	Yes	Yes	NA	Yes	Less than 8.33%	Less than or equal to 2%	Greater than 48 inches	1	4	97
4042	2/29/2016	Sandt DOT	Seabrook	Rt 1	Perpendicular	Concrete	Good	Yes	Yes	Yes	No	No	No	Yes	Yes	NA	Yes	Less than 8.33%	Less than or equal to 2%	Greater than 48 inches	1	4	97
4043	2/29/2016	Sandt DOT	Seabrook	Rt 1	Perpendicular	Concrete	Good	Yes	Yes	Yes	No	No	No	Yes	Yes	NA	Yes	Less than 8.33%	Less than or equal to 2%	Greater than 48 inches	1	4	97
4044	2/29/2016	Sandt DOT	Seabrook	Rt 1	Perpendicular	Concrete	Good	Yes	Yes	Yes	No	No	No	Yes	Yes	NA	Yes	Less than 8.33%	Less than or equal to 2%	Greater than 48 inches	1	4	97
4045	2/29/2016	Sandt DOT	Seabrook	Rt 1	Perpendicular	Concrete	Good	Yes	Yes	Yes	No	No	No	Yes	Yes	NA	Yes	Less than 8.33%	Less than or equal to 2%	Greater than 48 inches	1	4	97
4046	2/29/2016	Sandt DOT	Seabrook	Rt 1	Perpendicular	Concrete	Good	Yes	Yes	Yes	No	No	No	Yes	Yes	NA	Yes	Less than 8.33%	Less than or equal to 2%	Greater than 48 inches	1	4	97
4047	2/29/2016	Sandt DOT	Seabrook	Rt 1	Perpendicular	Concrete	Good	Yes	Yes	Yes	No	No	No	Yes	Yes	NA	Yes	Less than 8.33%	Less than or equal to 2%	Greater than 48 inches	1	4	97
4048	2/29/2016	Sandt DOT	Seabrook	Rt 1	Perpendicular	Concrete	Good	Yes	Yes	Yes	No	No	No	Yes	Yes	NA	Yes	Less than 8.33%	Less than or equal to 2%	Greater than 48 inches	1	4	97
4049	2/29/2016	Sandt DOT	Seabrook	Rt 1	Perpendicular	Concrete	Good	Yes	Yes	Yes	No	No	No	Yes	Yes	NA	Yes	Less than 8.33%	Less than or equal to 2%	Greater than 48 inches	1	4	97
4050	2/29/2016	Sandt DOT	Seabrook	Rt 1	Perpendicular	Concrete	Good	Yes	Yes	Yes	No	No	No	Yes	Yes	NA	Yes	Less than 8.33%	Less than or equal to 2%	Greater than 48 inches	1	4	97
4056	2/29/2016	Sandt DOT	Seabrook	Rt 1	Perpendicular	Concrete	Good	Yes	Yes	Yes	No	No	No	Yes	Yes	Yes	Yes	Less than 8.33%	Less than or equal to 2%	Greater than 48 inches	1	4	97
4061	2/29/2016	Sandt DOT	Seabrook	Rt 1	Perpendicular	Concrete	Good	Yes	Yes	Yes	No	No	No	Yes	Yes	Yes	Yes	Less than 8.33%	Less than or equal to 2%	Greater than 48 inches	1	4	97
4062	2/29/2016	Sandt DOT	Seabrook	Rt 1	Diagonal	Concrete	Good	Yes	Yes	Yes	No	No	No	Yes	Yes	Yes	Yes	Less than 8.33%	Less than or equal to 2%	Greater than 48 inches	1	4	97
4063	2/29/2016	Sandt DOT	Seabrook	Rt 1	Diagonal	Concrete	Good	Yes	Yes	Yes	No	No	No	Yes	Yes	Yes	Yes	Less than 8.33%	Less than or equal to 2%	Greater than 48 inches	1	4	97
4064	2/29/2016	Sandt DOT	Seabrook	Rt 1	Parallel	Concrete	Good	Yes	Yes	Yes	No	No	No	Yes	Yes	NA	Yes	Less than 8.33%	Less than or equal to 2%	Greater than 48 inches	1	4	97
4065	2/29/2016	Sandt DOT	Seabrook	Rt 1	Parallel	Concrete	Good	Yes	Yes	Yes	No	No	No	Yes	Yes	NA	Yes	Less than 8.33%	Less than or equal to 2%	Greater than 48 inches	1	4	97
4066	2/29/2016	Sandt DOT	Seabrook	Rt 1	Diagonal	Concrete	Good	Yes	Yes	Yes	No	No	No	Yes	Yes	Yes	Yes	Less than 8.33%	Less than or equal to 2%	Greater than 48 inches	1	4	97

4067	2/29/2016	Sandt DOT	Seabrook	Rt 1	Diagonal	Concrete	Good	Yes	Yes	Yes	No	No	No	Yes	Yes	Yes	Yes	Less than 8.33%	Less than or equal to 2%	Greater than 48 inches	1	4	97
4068	2/29/2016	Sandt DOT	Seabrook	Rt 1	Diagonal	Concrete	Good	Yes	Yes	Yes	No	No	No	Yes	Yes	Yes	Yes	Less than 8.33%	Less than or equal to 2%	Greater than 48 inches	1	4	97
4069	2/29/2016	Sandt DOT	Seabrook	Rt 1	Diagonal	Concrete	Good	Yes	Yes	Yes	No	No	No	Yes	Yes	Yes	Yes	Less than 8.33%	Less than or equal to 2%	Greater than 48 inches	1	4	97
4070	2/29/2016	Sandt DOT	Seabrook	Rt 1	Diagonal	Concrete	Good	Yes	Yes	Yes	No	No	No	Yes	Yes	Yes	Yes	Less than 8.33%	Less than or equal to 2%	Greater than 48 inches	1	4	97
4071	2/29/2016	Sandt DOT	Seabrook	Rt 1	Perpendicular	Concrete	Good	Yes	Yes	Yes	No	No	No	Yes	Yes	NA	Yes	Less than 8.33%	Less than or equal to 2%	Greater than 48 inches	1	4	97
4072	2/29/2016	Sandt DOT	Seabrook	Rt 1	Perpendicular	Concrete	Good	Yes	Yes	Yes	No	No	No	Yes	Yes	NA	Yes	Less than 8.33%	Less than or equal to 2%	Greater than 48 inches	1	4	97
4073	2/29/2016	Sandt DOT	Seabrook	Rt 1	Perpendicular	Concrete	Good	Yes	Yes	Yes	No	No	No	Yes	Yes	NA	Yes	Less than 8.33%	Less than or equal to 2%	Greater than 48 inches	1	4	97
4030	2/22/2016	Sandt DOT	Meredith	Rt 3	Perpendicular	Concrete	Good	Yes	Yes	Yes	No	No	No	Yes	Yes	NA	Yes	Less than 8.33%	Less than or equal to 2%	Greater than 48 inches	1	4	97
4031	2/22/2016	Sandt DOT	Meredith	Rt 3	Perpendicular	Concrete	Good	Yes	Yes	Yes	No	No	No	Yes	Yes	NA	Yes	Less than 8.33%	Less than or equal to 2%	Greater than 48 inches	1	4	97
4032	2/22/2016	Sandt DOT	Meredith	Rt 3	Perpendicular	Concrete	Good	Yes	Yes	Yes	No	No	No	Yes	Yes	NA	Yes	Less than 8.33%	Less than or equal to 2%	Greater than 48 inches	1	4	97
4037	2/22/2016	Sandt DOT	Meredith	Rt 3	Perpendicular	Concrete	Good	Yes	Yes	Yes	No	No	No	Yes	Yes	NA	Yes	Less than 8.33%	Less than or equal to 2%	Greater than 48 inches	1	4	97
3019	2/10/2016	Wilkinson District 1	Conway	Rtes. 16 & 302	Perpendicular	Concrete	Good	Yes	Yes	Yes	No	No	No	Yes	Yes	NA	Yes	Less than 8.33%	Less than or equal to 2%	Greater than 48 inches	1	4	97
4018	2/10/2016	Wilkinson District 1	Conway	Rtes. 16 & 302	Perpendicular	Concrete	Good	Yes	Yes	Yes	No	No	No	Yes	Yes	NA	Yes	Less than 8.33%	Less than or equal to 2%	Greater than 48 inches	1	4	97
3018	2/9/2016	Wilkinson District 1	Conway	Rtes. 16 & 302	Parallel	Concrete	Good	Yes	Yes	Yes	No	No	No	Yes	Yes	NA	Yes	Less than 8.33%	Less than or equal to 2%	Greater than 48 inches	1	4	97
3013	2/8/2016	Wilkinson District 1	Conway	Rtes. 16 & 302	Perpendicular	Concrete	Good	Yes	Yes	Yes	No	No	No	Yes	Yes	NA	Yes	Less than 8.33%	Less than or equal to 2%	Greater than 48 inches	1	4	97
3006	2/2/2016	Wilkinson District 1	Conway	Rtes. 16 & 302	Perpendicular	Concrete	Good	Yes	Yes	Yes	No	No	No	Yes	Yes	NA	Yes	Less than 8.33%	Less than or equal to 2%	Greater than 48 inches	1	4	97
2970	1/26/2016	Wilkinson District 1	Conway	Rte. 16 and 302	Parallel	Concrete	Good	Yes	Yes	Yes	No	No	No	Yes	Yes	NA	Yes	Less than 8.33%	Less than or equal to 2%	Greater than 48 inches	1	4	97
2966	1/25/2016	Wilkinson District 1	Conway	Rte. 302	Parallel	Concrete	Good	Yes	Yes	Yes	No	No	No	Yes	Yes	NA	Yes	Less than 8.33%	Less than or equal to 2%	Greater than 48 inches	1	4	97
2940	1/11/2016	Sandt DOT	Sandt DOT	Rt 3	Parallel	Concrete	Good	Yes	Yes	Yes	No	No	No	Yes	Yes	NA	Yes	Less than 8.33%	Less than or equal to 2%	Greater than 48 inches	1	4	97
2942	1/11/2016	Sandt DOT	Sandt DOT	Rt 3	Parallel	Concrete	Good	Yes	Yes	Yes	No	No	No	Yes	Yes	NA	Yes	Less than 8.33%	Less than or equal to 2%	Greater than 48 inches	1	4	97
2943	1/11/2016	Sandt DOT	Sandt DOT	Rt 3	Parallel	Concrete	Good	Yes	Yes	Yes	No	No	No	Yes	Yes	NA	Yes	Less than 8.33%	Less than or equal to 2%	Greater than 48 inches	1	4	97
2944	1/11/2016	Sandt DOT	Sandt DOT	Rt 3	Parallel	Concrete	Good	Yes	Yes	Yes	No	No	No	Yes	Yes	NA	Yes	Less than 8.33%	Less than or equal to 2%	Greater than 48 inches	1	4	97
2945	1/11/2016	Sandt DOT	Sandt DOT	Rt 3	Parallel	Concrete	Good	Yes	Yes	Yes	No	No	No	Yes	Yes	NA	Yes	Less than 8.33%	Less than or equal to 2%	Greater than 48 inches	1	4	97
2946	1/11/2016	Sandt DOT	Sandt DOT	Rt 3	Parallel	Concrete	Good	Yes	Yes	Yes	No	No	No	Yes	Yes	NA	Yes	Less than 8.33%	Less than or equal to 2%	Greater than 48 inches	1	4	97
2947	1/11/2016	Sandt DOT	Sandt DOT	Rt 3	Parallel	Concrete	Good	Yes	Yes	Yes	No	No	No	Yes	Yes	NA	Yes	Less than 8.33%	Less than or equal to 2%	Greater than 48 inches	1	4	97
2948	1/11/2016	Sandt DOT	Sandt DOT	Rt 3	Perpendicular	Concrete	Good	Yes	Yes	Yes	No	No	No	Yes	Yes	NA	Yes	Less than 8.33%	Less than or equal to 2%	Greater than 48 inches	1	4	97
2949	1/11/2016	Sandt DOT	Sandt DOT	Rt 3	Perpendicular	Concrete	Good	Yes	Yes	Yes	No	No	No	Yes	Yes	NA	Yes	Less than 8.33%	Less than or equal to 2%	Greater than 48 inches	1	4	97
2954	1/11/2016	Wilkinson District 1	Woodstock	Rte. 112	Parallel	Concrete	Good	Yes	Yes	Yes	No	No	No	Yes	Yes	NA	Yes	Less than 8.33%	Less than or equal to 2%	Greater than 48 inches	1	4	97
2957	1/11/2016	Wilkinson District 1	Lincoln	Rte. 112	Parallel	Concrete	Good	Yes	Yes	Yes	No	No	No	Yes	Yes	NA	Yes	Less than 8.33%	Less than or equal to 2%	Greater than 48 inches	1	4	97
2932	1/8/2016	Sandt DOT	New London	Newport Road	Parallel	Concrete	Good	Yes	Yes	Yes	No	No	No	Yes	Yes	NA	Yes	Less than 8.33%	Less than or equal to 2%	Greater than 48 inches	1	4	97
2933	1/8/2016	Sandt DOT	New London	Newport Road	Parallel	Concrete	Good	Yes	Yes	Yes	No	No	No	Yes	Yes	NA	Yes	Less than 8.33%	Less than or equal to 2%	Greater than 48 inches	1	4	97
2934	1/8/2016	Sandt DOT	New London	Newport Road	Parallel	Concrete	Good	Yes	Yes	Yes	No	No	No	Yes	Yes	NA	Yes	Less than 8.33%	Less than or equal to 2%	Greater than 48 inches	1	4	97
2935	1/8/2016	Sandt DOT	New London	Newport Road	Parallel	Concrete	Good	Yes	Yes	Yes	No	No	No	Yes	Yes	NA	Yes	Less than 8.33%	Less than or equal to 2%	Greater than 48 inches	1	4	97
2936	1/8/2016	Sandt DOT	New London	Newport Road	Parallel	Concrete	Good	Yes	Yes	Yes	No	No	No	Yes	Yes	NA	Yes	Less than 8.33%	Less than or equal to 2%	Greater than 48 inches	1	4	97
2937	1/8/2016	Sandt DOT	New London	Newport Road	Parallel	Concrete	Good	Yes	Yes	Yes	No	No	No	Yes	Yes	NA	Yes	Less than 8.33%	Less than or equal to 2%	Greater than 48 inches	1	4	97
2938	1/8/2016	Sandt DOT	New London	Newport Road	Parallel	Concrete	Good	Yes	Yes	Yes	No	No	No	Yes	Yes	NA	Yes	Less than 8.33%	Less than or equal to 2%	Greater than 48 inches	1	4	97
2939	1/8/2016	Sandt DOT	New London	Newport Road	Parallel	Concrete	Good	Yes	Yes	Yes	No	No	No	Yes	Yes	NA	Yes	Less than 8.33%	Less than or equal to 2%	Greater than 48 inches	1	4	97
2907	1/7/2016	Nichols district 1	Woodsville	Rte 10	Parallel	Concrete	Good	Yes	Yes	Yes	No	No	No	Yes	NA	NA	Yes	Less than 8.33%	Less than or equal to 2%	Greater than 48 inches	1	4	97
2908	1/7/2016	Nichols district 1	Woodsville	Rte 10	Perpendicular	Concrete	Good	Yes	Yes	Yes	No	No	No	Yes	NA	NA	Yes	Less than 8.33%	Less than or equal to 2%	Greater than 48 inches	1	4	97
2913	1/7/2016	Wilkinson District 1	Woodstock	Rte. 112	Parallel	Concrete	Good	Yes	Yes	Yes	No	No	No	Yes	Yes	NA	Yes	Less than 8.33%	Less than or equal to 2%	Greater than 48 inches	1	4	97
2914	1/7/2016	Wilkinson District 1	Woodstock	Rte. 112	Parallel	Concrete	Good	Yes	Yes	Yes	No	No	No	Yes	Yes	NA	Yes	Less than 8.33%	Less than or equal to 2%	Greater than 48 inches	1	4	97
2915	1/7/2016	Wilkinson District 1	Woodstock	Rte. 112	Parallel	Concrete	Good	Yes	Yes	Yes	No	No	No	Yes	Yes	NA	Yes	Less than 8.33%	Less than or equal to 2%	Greater than 48 inches	1	4	97
2916	1/7/2016	Wilkinson District 1	Woodstock	Rte. 112	Parallel	Concrete	Good	Yes	Yes	Yes	No	No	No	Yes	Yes	NA	Yes	Less than 8.33%	Less than or equal to 2%	Greater than 48 inches	1	4	97
2917	1/7/2016	Wilkinson District 1	Woodstock	Rte. 112	Parallel	Concrete	Good	Yes	Yes	Yes	No	No	No	Yes	Yes	NA	Yes	Less than 8.33%	Less than or equal to 2%	Greater than 48 inches	1	4	97
2887	1/5/2016	Sandt DOT	Belmont	Rt 140	Diagonal	Concrete	Good	Yes	Yes	Yes	No	No	No	Yes	Yes	Yes	Yes	Less than 8.33%	Less than or equal to 2%	Greater than 48 inches	1	4	97
2888	1/5/2016	Sandt DOT	Belmont	Rt 140	Diagonal	Concrete	Good	Yes	Yes	Yes	No	No	No	Yes	Yes	Yes	Yes	Less than 8.33%	Less than or equal to 2%	Greater than 48 inches	1	4	97
2891	1/5/2016	Sandt DOT	Belmont	Rt 140	Parallel	Concrete	Good	Yes	Yes	Yes	No	No	No	Yes	Yes	NA	Yes	Less than 8.33%	Less than or equal to 2%	Greater than 48 inches	1	4	97
2892	1/5/2016	Sandt DOT	Belmont	Rt 140	Perpendicular	Concrete	Good	Yes	Yes	Yes	No	No	No	Yes	Yes	NA	Yes	Less than 8.33%	Less than or equal to 2%	Greater than 48 inches	1	4	97
2898	1/5/2016	Sandt DOT	Belmont	Rt 140	Parallel	Concrete	Good	Yes	Yes	Yes	No	No	No	Yes	Yes	Yes	Yes	Less than 8.33%	Less than or equal to 2%	Greater than 48 inches	1	4	97
2899	1/5/2016	Sandt DOT	Belmont	Rt 140	Parallel	Concrete	Good	Yes	Yes	Yes	No	No	No	Yes	Yes	Yes	Yes	Less than 8.33%	Less than or equal to 2%	Greater than 48 inches	1	4	97
2874	1/4/2016	Sandt DOT	Tilton	Rt 3	Diagonal	Concrete	Good	Yes	Yes	Yes	No	No	No	Yes	Yes	Yes	Yes	Less than 8.33%	Less than or equal to 2%	Greater than 48 inches	1	4	97
2875	1/4/2016	Sandt DOT	Tilton	Rt 3	Parallel	Concrete	Good	Yes	Yes	Yes	No	No	No	Yes	Yes	Yes	Yes	Less than 8.33%	Less than or equal to 2%	Greater than 48 inches	1	4	97
2876	1/4/2016	Sandt DOT	Tilton	Rt 3	Diagonal	Concrete	Good	Yes	Yes	Yes	No	No	No	Yes	Yes	Yes	Yes	Less than 8.33%	Less than or equal to 2%	Greater than 48 inches	1	4	97
2877	1/4/2016	Sandt DOT	Tilton	Rt 3	Diagonal	Concrete	Good	Yes	Yes	Yes	No	No	No	Yes	Yes	Yes	Yes	Less than 8.33%	Less than or equal to 2%	Greater than 48 inches	1	4	97
2878	1/4/2016	Sandt DOT	Tilton	Rt 3	Diagonal	Concrete	Good	Yes	Yes	Yes	No	No	No	Yes	Yes	Yes	Yes	Less than 8.33%	Less than or equal to 2%	Greater than 48 inches	1	4	97
2886	1/4/2016	Sandt DOT	Belmont	Daniel Webster Hwy	Parallel	Concrete	Good	Yes	Yes	Yes	No	No	No	Yes	Yes	NA	Yes	Less than 8.33%	Less than or equal to 2%	Greater than 48 inches	1	4	97
2870	12/28/2015	NM SWRPC	Hinsdale	School st	Combined	Concrete	Good	Yes	Yes	Yes	No	No	No	Yes	Yes	NA	Yes	Less than 8.33%	Less than or equal to 2%	Greater than 48 inches	1	4	97
2871	12/28/2015	NM SWRPC	Hinsdale	School st	Diagonal	Concrete	Good	Yes	Yes	Yes	No	No	No	Yes	Yes	NA	Yes	Less than 8.33%	Less than or equal to 2%	Greater than 48 inches	1	4	97
2872	12/28/2015	NM SWRPC	Hinsdale	School st	Parallel	Concrete	Good	Yes	Yes	Yes	No	No	No	Yes	Yes	NA	Yes	Less than 8.33%	Less than or equal to 2%	Greater than 48 inches	1	4	97
2839	12/23/2015	Sandt DOT	Andover	Rt 4	Perpendicular	Concrete	Good	Yes	Yes	Yes	No	No	No	Yes	Yes	NA	Yes	Less than 8.33%	Less than or equal to 2%	Greater than 48 inches	1	4	97
2840	12/23/2015	Sandt DOT	Andover	Rt 4	Perpendicular	Concrete	Good	Yes	Yes	Yes	No	No	No	Yes	Yes	NA	Yes	Less than 8.33%	Less than or equal to 2%	Greater than 48 inches	1	4	97
2824	12/18/2015	Sandt DOT	Meredith	Rt 25	Perpendicular	Concrete	Good	Yes	Yes	Yes	No	No	No	Yes	Yes	NA	Yes	Less than 8.33%	Less than or equal to 2%	Greater than 48 inches	1	4	97
2825	12/18/2015	Sandt DOT	Meredith	Rt 25	Perpendicular	Concrete	Good	Yes	Yes	Yes	No	No	No	Yes	Yes	NA	Yes	Less than 8.33%	Less than or equal to 2%	Greater than 48 inches	1	4	97
2826	12/18/2015	Sandt DOT	Meredith	Rt 25	Diagonal	Concrete	Good	Yes	Yes	Yes	No	No	No	Yes	Yes	NA	Yes	Less than 8.33%	Less than or equal to 2%	Greater than 48 inches	1	4	97
2827	12/18/2015	Sandt DOT	Meredith	Rt 25	Diagonal	Concrete	Good	Yes	Yes	Yes	No	No	No	Yes	Yes	NA	Yes	Less than 8.33%	Less than or equal to 2%	Greater than 48 inches	1	4	97
2828	12/18/2015	Sandt DOT	Meredith	Rt 25	Parallel	Concrete	Good	Yes	Yes	Yes	No	No	No	Yes	Yes	NA	Yes	Less than 8.33%	Less than or equal to 2%	Greater than 48 inches	1	4	97
2829	12/18/2015	Sandt DOT	Meredith	Rt 25	Parallel	Concrete	Good	Yes	Yes	Yes	No	No	No	Yes	Yes	NA	Yes	Less than 8.33%	Less than or equal to 2%	Greater than 48 inches	1	4	97
2830	12/18/2015	Sandt DOT	Meredith	Rt 25	Parallel	Concrete	Good	Yes	Yes	Yes	No	No	No	Yes	Yes	NA	Yes	Less than 8.33%	Less than or equal to 2%	Greater than 48 inches	1	4	97
2831	12/18/2015	Sandt DOT	Meredith	Rt 25	Parallel	Concrete	Good	Yes	Yes	Yes	No	No	No	Yes	Yes	NA	Yes	Less than 8.33%	Less than or equal to 2%	Greater than 48 inches	1	4	97
2832	12/18/2015	Sandt DOT	Meredith	Rt 25	Parallel	Concrete	Good	Yes	Yes	Yes	No	No	No	Yes	Yes	NA	Yes	Less than 8.33%	Less than or equal to 2%	Greater than 48 inches	1	4	97
2796	12/16/2015	Nichols district 1	Littleton	Rte 302	Parallel	Concrete	Good	Yes	Yes	Yes	No	No	No	Yes	NA	NA	Yes	Less than 8.33%	Less than or equal to 2%	Greater than 48 inches	1	4	97
2798	12/16/2015	Nichols district 1	Littleton	Rte 302	Parallel	Concrete	Good	Yes	Yes	Yes	No	No	No	Yes	NA	NA	Yes	Less than 8.33%	Less than or equal to 2%	Greater than 48 inches	1	4	97
2801	12/16/2015	Sandt DOT	Tilton	Rt 3	Diagonal	Concrete	Good	Yes	Yes	Yes	No	No	No	Yes	Yes	Yes	Yes	Less than 8.33%	Less than or equal to 2%	Greater than 48 inches	1	4	97
2802	12/16/2015	Sandt DOT	Tilton	Rt 3	Parallel	Concrete	Good	Yes	Yes	Yes	No	No	No	Yes	Yes	NA	Yes	Less than 8.33%	Less than or equal to 2%	Greater than 48 inches	1	4	97
2803	12/16/2015	Sandt DOT	Tilton	Rt 3	Parallel	Concrete	Good	Yes	Yes	Yes	No	No	No	Yes	Yes	NA	Yes	Less than 8.33%	Less than or equal to 2%	Greater than 48 inches	1	4	97
2805	12/16/2015	Sandt DOT	Tilton	Rt 3	Parallel	Concrete	Good	Yes	Yes	Yes	No	No	No	Yes	Yes	NA	Yes	Less than 8.33%	Less than or equal to 2%	Greater than 48 inches	1	4	97
2807	12/16/2015	Sandt DOT	Tilton	Rt 3	Parallel	Concrete	Good	Yes	Yes	Yes	No	No	No	Yes	Yes	NA	Yes	Less than 8.33%	Less than or equal to 2%	Greater than 48 inches	1	4	97
2812	12/16/2015	Wilkinson District 1	Littleton	Rte. 302	Perpendicular	Concrete	Good	Yes	Yes	Yes	No	No	No	Yes	Yes	NA	Yes	Less than 8.33%	Less than or equal to 2%	Greater than 48 inches	1	4	97
2750	12/14/2015	Patch district 1	Littleton	Rte 302	Parallel	Concrete	Good	Yes	Yes	Yes	No	No	No	Yes	Yes	NA	Yes	Less than 8.33%	Less than or equal to 2%	Greater than 48 inches	1	4	97
2754	12/14/2015	Patch district 1	Littleton	Rte 302	Parallel	Concrete	Good	Yes	Yes	Yes	No	No	No	Yes	Yes	NA	Yes	Less than 8.33%	Less than or equal to 2%	Greater than 48 inches	1	4	97
2725	12/10/2015	Sandt DOT	Laconia	Rt 3	Perpendicular	Concrete	Good	Yes	Yes	Yes	No	No	No	Yes	Yes	NA	Yes	Less than 8.33%	Less than or equal to 2%	Greater than 48 inches	1	4	97
2736	12/10/2015	Sandt DOT	Laconia	Rt 3	Diagonal	Concrete	Good	Yes	Yes	Yes	No	No	No	Yes	Yes	NA	Yes	Less than 8.33%	Less than or equal to 2%	Greater than 48 inches	1	4	97
2737	12/10/2015	Sandt DOT	Laconia	Rt 3	Diagonal	Concrete	Good	Yes	Yes	Yes	No	No	No	Yes	Yes	NA	Yes	Less than 8.33%	Less than or equal to 2%	Greater than 48 inches	1	4	97
2691	12/9/2015	Sandt DOT	Mont Vernon	Rt 13	Perpendicular	Concrete	Good	Yes	Yes	Yes	No	No	No	Yes	Yes	NA	Yes	Less than 8.33%	Less than or equal to 2%	Greater than 48 inches	1	4	97
2692	12/9/2015	Sandt DOT	Mont Vernon	Rt 13	Perpendicular	Concrete	Good	Yes	Yes	Yes	No	No	No	Yes	Yes	NA	Yes	Less than 8.33%	Less than or equal to 2%	Greater than 48 inches	1	4	97
2693	12/9/2015	Sandt DOT	Mont Vernon	Rt 13	Parallel	Concrete	Good	Yes	Yes	Yes	No	No	No	Yes	Yes	NA	Yes	Less than 8.33%	Less than or equal to 2%	Greater than 48 inches	1	4	97
2694	12/9/2015	Sandt DOT	Mont Vernon	Rt 13	Parallel	Concrete	Good	Yes	Yes	Yes	No	No	No	Yes	Yes	NA	Yes	Less than 8.33%	Less than or equal to 2%	Greater than 48 inches	1	4	97
2695	12/9/2015	Sandt DOT	Mont Vernon	Rt 13	Perpendicular	Concrete	Good	Yes	Yes	Yes	No	No	No	Yes	Yes	NA	Yes	Less than 8.33%	Less than or equal to 2%	Greater than 48 inches	1	4	97
2696	12/9/2015	Sandt DOT	Mont Vernon	Rt 13	Parallel	Concrete	Good	Yes	Yes	Yes	No	No	No	Yes	Yes	NA	Yes	Less than 8.33%	Less than or equal to 2%	Greater than 48 inches	1	4	97
2697	12/9/2015	Sandt DOT	Mont Vernon	Rt 13	Parallel	Concrete	Good	Yes	Yes	Yes	No	No	No	Yes	Yes	NA	Yes	Less than 8.33%	Less than or equal to 2%	Greater than 48 inches	1	4	97
2698	12/9/2015	Sandt DOT	Mont Vernon	Rt 13	Perpendicular	Concrete	Good	Yes	Yes	Yes	No	No	No	Yes	Yes	NA	Yes	Less than 8.33%	Less than or equal to 2%	Greater than 48 inches	1	4	97
2705	12/9/2015	Sandt DOT	Mont Vernon	Rt 13	Parallel	Concrete	Good	Yes	Yes	Yes	No	No	No	Yes	Yes	NA	Yes	Less than 8.33%	Less than or equal to 2%	Greater than 48 inches	1	4	97
2706	12/9/2015	Sandt DOT	Mont Vernon	Rt 13	Parallel	Concrete	Good	Yes	Yes	Yes	No	No	No	Yes	Yes	NA	Yes	Less than 8.33%	Less than or equal to 2%	Greater than 48 inches	1	4	97
2707	12/9/2015	Sandt DOT	Mont Vernon	Rt 13	Parallel	Concrete	Good	Yes	Yes	Yes	No	No	No	Yes	Yes	NA	Yes	Less than 8.33%	Less than or equal to 2%	Greater than 48 inches	1	4	97
2708	12/9/2015	Sandt DOT	Mont Vernon	Rt 13	Parallel	Concrete	Good	Yes	Yes	Yes	No	No	No	Yes	Yes	NA	Yes	Less than 8.33%	Less than or equal to 2%	Greater than 48 inches	1	4	97
2652	12/4/2015	Sandt DOT	Plymouth	Bridge Street	Perpendicular	Concrete	Good	Yes	Yes	Yes	No	No	No	Yes	Yes	NA	Yes	Less than 8.33%	Less than or equal to 2%	Greater than 48 inches	1	4	97
2653	12/4/2015	Sandt DOT	Plymouth	Bridge Street	Perpendicular	Concrete	Good	Yes	Yes	Yes	No	No	No	Yes	Yes	NA	Yes	Less than 8.33%	Less than or equal to 2%	Greater than 48 inches	1	4	97
2654	12/4/2015	Sandt DOT	Plymouth	Bridge Street	Perpendicular	Concrete	Good	Yes	Yes	Yes	No	No	No	Yes	Yes	NA	Yes	Less than 8.33%	Less than or equal to 2%	Greater than 48 inches	1	4	97
2658	12/4/2015	Sandt DOT	Plymouth	Bridge Street	Perpendicular	Concrete	Good	Yes	Yes	Yes	No	No	No	Yes	Yes	NA	Yes	Less than 8.33%	Less than or equal to 2%	Greater than 48 inches	1	4	97
2659	12/4/2015	Sandt DOT	Plymouth	Bridge Street	Perpendicular	Concrete	Good	Yes	Yes	Yes	No	No	No	Yes	Yes	NA	Yes	Less than 8.33%	Less than or equal to 2%	Greater than 48 inches	1	4	97
2660	12/4/2015	Sandt DOT	Plymouth	Bridge Street	Perpendicular	Concrete	Good	Yes	Yes	Yes	No	No	No	Yes	Yes	NA	Yes	Less than 8.33%	Less than or equal to 2%	Greater than 48 inches	1	4	97
2635	12/3/2015	Sandt DOT	Holderness	Bridge Street	Parallel	Concrete	Good	Yes	Yes	Yes	No	No	No	Yes	Yes	NA	Yes	Less than 8.33%	Less than or equal to 2%	Greater than 48 inches	1	4	97
2636	12/3/2015	Sandt DOT	Holderness	Bridge Street	Parallel	Concrete	Good	Yes	Yes	Yes	No	No	No	Yes	Yes	NA	Yes	Less than 8.33%	Less than or equal to 2%	Greater than 48 inches	1	4	97
2637	12/3/2015	Sandt DOT	Holderness	Bridge Street	Perpendicular	Concrete	Good	Yes	Yes	Yes	No	No	No	Yes	Yes	NA	Yes	Less than 8.33%	Less than or equal to 2%	Greater than 48 inches	1	4	97
2638	12/3/2015	Sandt DOT	Holderness	Bridge Street	Perpendicular	Concrete	Good	Yes	Yes	Yes	No	No	No	Yes	Yes	NA	Yes	Less than 8.33%	Less than or equal to 2%	Greater than 48 inches	1	4	97
2643	12/3/2015	Sandt DOT	Holderness	Bridge Street	Diagonal	Concrete	Good	Yes	Yes	Yes	No	No	No	Yes	Yes	NA	Yes	Less than 8.33%	Less than or equal to 2%	Greater than 48 inches	1	4	97
2644	12/3/2015	Sandt DOT	Holderness	Bridge Street	Diagonal	Concrete	Good	Yes	Yes	Yes	No	No	No	Yes	Yes	NA	Yes	Less than 8.33%	Less than or equal to 2%	Greater than 48 inches	1	4	97
2645	12/3/2015	Sandt DOT	Plymouth	Bridge Street	Perpendicular	Concrete	Good	Yes	Yes	Yes	No	No	No	Yes	Yes	NA	Yes	Less than 8.33%	Less than or equal to 2%	Greater than 48 inches	1	4	97
2646	12/3/2015	Sandt DOT	Plymouth	Bridge Street	Perpendicular	Concrete	Good	Yes	Yes	Yes	No	No	No	Yes	Yes	NA	Yes	Less than 8.33%	Less than or equal to 2%	Greater than 48 inches	1	4	97
2647	12/3/2015	Sandt DOT	Plymouth	Bridge Street	Perpendicular	Concrete	Good	Yes	Yes	Yes	No	No	No	Yes	Yes	NA	Yes	Less than 8.33%	Less than or equal to 2%	Greater than 48 inches	1	4	97
2650	12/3/2015	Sandt DOT	Holderness	Bridge Street	Parallel	Concrete	Good	Yes	Yes	Yes	No	No	No	Yes	Yes	NA	Yes	Less than 8.33%	Less than or equal to 2%	Greater than 48 inches	1	4	97
2651	12/3/2015	Sandt DOT	Holderness	Bridge Street	Parallel	Concrete	Good	Yes	Yes	Yes	No	No	No	Yes	Yes	NA	Yes	Less than 8.33%	Less than or equal to 2%	Greater than 48 inches	1	4	97
2561	11/25/2015	Sandt DOT	Alton	Rt 11	Perpendicular	Concrete	Good	Yes	Yes	Yes	No	No	No	Yes	Yes	NA	Yes	Less than 8.33%	Less than or equal to 2%	Greater than 48 inches	1	4	97

2562	11/25/2015	Sandt DOT	Alton	Rt 11	Perpendicular	Concrete	Good	Yes	Yes	Yes	No	No	No	Yes	Yes	NA	Yes	Less than 8.33%	Less than or equal to 2%	Greater than 48 inches	1	4	97
2570	11/25/2015	Sandt DOT	Alton	Rt 11	Parallel	Concrete	Good	Yes	Yes	Yes	No	No	No	Yes	Yes	NA	Yes	Less than 8.33%	Less than or equal to 2%	Greater than 48 inches	1	4	97
2571	11/25/2015	Sandt DOT	Alton	Rt 11	Parallel	Concrete	Good	Yes	Yes	Yes	No	No	No	Yes	Yes	NA	Yes	Less than 8.33%	Less than or equal to 2%	Greater than 48 inches	1	4	97
2572	11/25/2015	Sandt DOT	Alton	Rt 11	Parallel	Concrete	Good	Yes	Yes	Yes	No	No	No	Yes	Yes	NA	Yes	Less than 8.33%	Less than or equal to 2%	Greater than 48 inches	1	4	97
2573	11/25/2015	Sandt DOT	Alton	Rt 11	Diagonal	Concrete	Good	Yes	Yes	Yes	No	No	No	Yes	Yes	NA	Yes	Less than 8.33%	Less than or equal to 2%	Greater than 48 inches	1	4	97
2574	11/25/2015	Sandt DOT	Alton	Rt 11	Diagonal	Concrete	Good	Yes	Yes	Yes	No	No	No	Yes	Yes	NA	Yes	Less than 8.33%	Less than or equal to 2%	Greater than 48 inches	1	4	97
2575	11/25/2015	Sandt DOT	Alton	Rt 11	Perpendicular	Concrete	Good	Yes	Yes	Yes	No	No	No	Yes	Yes	NA	Yes	Less than 8.33%	Less than or equal to 2%	Greater than 48 inches	1	4	97
2576	11/25/2015	Sandt DOT	Alton	Rt 11	Perpendicular	Concrete	Good	Yes	Yes	Yes	No	No	No	Yes	Yes	NA	Yes	Less than 8.33%	Less than or equal to 2%	Greater than 48 inches	1	4	97
2577	11/25/2015	Sandt DOT	Alton	Rt 11	Parallel	Concrete	Good	Yes	Yes	Yes	No	No	No	Yes	Yes	NA	Yes	Less than 8.33%	Less than or equal to 2%	Greater than 48 inches	1	4	97
2578	11/25/2015	Sandt DOT	Alton	Rt 11	Parallel	Concrete	Good	Yes	Yes	Yes	No	No	No	Yes	Yes	NA	Yes	Less than 8.33%	Less than or equal to 2%	Greater than 48 inches	1	4	97
2579	11/25/2015	Sandt DOT	Alton	Rt 11	Parallel	Concrete	Good	Yes	Yes	Yes	No	No	No	Yes	Yes	NA	Yes	Less than 8.33%	Less than or equal to 2%	Greater than 48 inches	1	4	97
2580	11/25/2015	Sandt DOT	Alton	Rt 11	Parallel	Concrete	Good	Yes	Yes	Yes	No	No	No	Yes	Yes	NA	Yes	Less than 8.33%	Less than or equal to 2%	Greater than 48 inches	1	4	97
2581	11/25/2015	Sandt DOT	Alton	Rt 11	Perpendicular	Concrete	Good	Yes	Yes	Yes	No	No	No	Yes	Yes	NA	Yes	Less than 8.33%	Less than or equal to 2%	Greater than 48 inches	1	4	97
2582	11/25/2015	Sandt DOT	Alton	Rt 11	Perpendicular	Concrete	Good	Yes	Yes	Yes	No	No	No	Yes	Yes	NA	Yes	Less than 8.33%	Less than or equal to 2%	Greater than 48 inches	1	4	97
2533	11/23/2015	Sandt DOT	Wolfeboro	Rt 109	Parallel	Concrete	Good	Yes	Yes	Yes	No	No	No	Yes	Yes	NA	Yes	Less than 8.33%	Less than or equal to 2%	Greater than 48 inches	1	4	97
2534	11/23/2015	Sandt DOT	Wolfeboro	Rt 109	Parallel	Concrete	Good	Yes	Yes	Yes	No	No	No	Yes	Yes	NA	Yes	Less than 8.33%	Less than or equal to 2%	Greater than 48 inches	1	4	97
2631	11/10/2015	Sandt DOT	Hampton	Rt 1	Diagonal	Concrete	Good	Yes	Yes	Yes	No	No	No	Yes	Yes	NA	Yes	Less than 8.33%	Less than or equal to 2%	Greater than 48 inches	1	4	97
2521	11/6/2015	Sandt DOT	Seabrook	107	Diagonal	Concrete	Good	Yes	Yes	Yes	No	No	No	Yes	Yes	NA	Yes	Less than 8.33%	Less than or equal to 2%	Greater than 48 inches	1	4	97
2522	11/6/2015	Sandt DOT	Seabrook	107	Diagonal	Concrete	Good	Yes	Yes	Yes	No	No	No	Yes	Yes	NA	Yes	Less than 8.33%	Less than or equal to 2%	Greater than 48 inches	1	4	97
2523	11/6/2015	Sandt DOT	Seabrook	107	Perpendicular	Concrete	Good	Yes	Yes	Yes	No	No	No	Yes	Yes	NA	Yes	Less than 8.33%	Less than or equal to 2%	Greater than 48 inches	1	4	97
2524	11/6/2015	Sandt DOT	Seabrook	107	Perpendicular	Concrete	Good	Yes	Yes	Yes	No	No	No	Yes	Yes	NA	Yes	Less than 8.33%	Less than or equal to 2%	Greater than 48 inches	1	4	97
2525	11/6/2015	Sandt DOT	Seabrook	107	Perpendicular	Concrete	Good	Yes	Yes	Yes	No	No	No	Yes	Yes	NA	Yes	Less than 8.33%	Less than or equal to 2%	Greater than 48 inches	1	4	97
2526	11/6/2015	Sandt DOT	Seabrook	107	Perpendicular	Concrete	Good	Yes	Yes	Yes	No	No	No	Yes	Yes	NA	Yes	Less than 8.33%	Less than or equal to 2%	Greater than 48 inches	1	4	97
2527	11/6/2015	Sandt DOT	Seabrook	107	Perpendicular	Concrete	Good	Yes	Yes	Yes	No	No	No	Yes	Yes	NA	Yes	Less than 8.33%	Less than or equal to 2%	Greater than 48 inches	1	4	97
2528	11/6/2015	Sandt DOT	Seabrook	107	Perpendicular	Concrete	Good	Yes	Yes	Yes	No	No	No	Yes	Yes	NA	Yes	Less than 8.33%	Less than or equal to 2%	Greater than 48 inches	1	4	97
2529	11/6/2015	Sandt DOT	Seabrook	107	Perpendicular	Concrete	Good	Yes	Yes	Yes	No	No	No	Yes	Yes	NA	Yes	Less than 8.33%	Less than or equal to 2%	Greater than 48 inches	1	4	97
2530	11/6/2015	Sandt DOT	Seabrook	107	Perpendicular	Concrete	Good	Yes	Yes	Yes	No	No	No	Yes	Yes	NA	Yes	Less than 8.33%	Less than or equal to 2%	Greater than 48 inches	1	4	97
1662	9/2/2015	Sandt DOT	Winchester	Rt 10	Parallel	Concrete	Good	Yes	Yes	Yes	No	No	No	Yes	Yes	NA	Yes	Less than 8.33%	Less than or equal to 2%	Greater than 48 inches	1	4	97
1663	9/2/2015	Sandt DOT	Winchester	Rt 10	Parallel	Concrete	Good	Yes	Yes	Yes	No	No	No	Yes	Yes	NA	Yes	Less than 8.33%	Less than or equal to 2%	Greater than 48 inches	1	4	97
1664	9/2/2015	Sandt DOT	Winchester	Rt 10	Diagonal	Concrete	Good	Yes	Yes	Yes	No	No	No	Yes	Yes	Yes	Yes	Less than 8.33%	Less than or equal to 2%	Greater than 48 inches	1	4	97
1665	9/2/2015	Sandt DOT	Winchester	Rt 10	Parallel	Concrete	Good	Yes	Yes	Yes	No	No	No	Yes	Yes	NA	Yes	Less than 8.33%	Less than or equal to 2%	Greater than 48 inches	1	4	97
1666	9/2/2015	Sandt DOT	Winchester	Rt 10	Parallel	Concrete	Good	Yes	Yes	Yes	No	No	No	Yes	Yes	NA	Yes	Less than 8.33%	Less than or equal to 2%	Greater than 48 inches	1	4	97
1670	9/2/2015	Sandt DOT	Winchester	Rt 10	Parallel	Concrete	Good	Yes	Yes	Yes	No	No	No	Yes	Yes	NA	Yes	Less than 8.33%	Less than or equal to 2%	Greater than 48 inches	1	4	97
1671	9/2/2015	Sandt DOT	Winchester	Rt 10	Parallel	Concrete	Good	Yes	Yes	Yes	No	No	No	Yes	Yes	NA	Yes	Less than 8.33%	Less than or equal to 2%	Greater than 48 inches	1	4	97
4083	3/15/2016	Sandt DOT	Salem	Salem Park n Ride	Diagonal	Concrete	Good	Yes	Yes	Yes	No	No	No	Yes	Yes	Yes	Yes	Less than 8.33%	Less than or equal to 2%	Greater than 48 inches	1	4	97
4084	3/15/2016	Sandt DOT	Salem	Salem Park n Ride	Diagonal	Concrete	Good	Yes	Yes	Yes	No	No	No	Yes	Yes	Yes	Yes	Less than 8.33%	Less than or equal to 2%	Greater than 48 inches	1	4	97
4085	3/15/2016	Sandt DOT	Salem	Salem Park n Ride	Diagonal	Concrete	Good	Yes	Yes	Yes	No	No	No	Yes	Yes	Yes	Yes	Less than 8.33%	Less than or equal to 2%	Greater than 48 inches	1	4	97
4086	3/15/2016	Sandt DOT	Salem	Salem Park n Ride	Diagonal	Concrete	Good	Yes	Yes	Yes	No	No	No	Yes	Yes	Yes	Yes	Less than 8.33%	Less than or equal to 2%	Greater than 48 inches	1	4	97
4088	3/15/2016	Sandt DOT	Salem	Salem Park n Ride	Perpendicular	Concrete	Good	Yes	Yes	Yes	No	No	No	Yes	Yes	NA	Yes	Less than 8.33%	Less than or equal to 2%	Greater than 48 inches	1	4	97
4089	3/15/2016	Sandt DOT	Salem	Salem Park n Ride	Perpendicular	Concrete	Good	Yes	Yes	Yes	No	No	No	Yes	Yes	NA	Yes	Less than 8.33%	Less than or equal to 2%	Greater than 48 inches	1	4	97
4090	3/16/2016	Sandt DOT	Plaistow	Rt 125	Perpendicular	Concrete	Good	Yes	Yes	Yes	No	No	No	Yes	Yes	NA	Yes	Less than 8.33%	Less than or equal to 2%	Greater than 48 inches	1	4	97
4091	3/16/2016	Sandt DOT	Plaistow	Rt 125	Perpendicular	Concrete	Good	Yes	Yes	Yes	No	No	No	Yes	Yes	NA	Yes	Less than 8.33%	Less than or equal to 2%	Greater than 48 inches	1	4	97
4093	3/16/2016	Sandt DOT	Plaistow	Rt 125	Perpendicular	Concrete	Good	Yes	Yes	Yes	No	No	No	Yes	Yes	Yes	Yes	Less than 8.33%	Less than or equal to 2%	Greater than 48 inches	1	4	97
4094	3/16/2016	Sandt DOT	Plaistow	Rt 125	Perpendicular	Concrete	Good	Yes	Yes	Yes	No	No	No	Yes	Yes	Yes	Yes	Less than 8.33%	Less than or equal to 2%	Greater than 48 inches	1	4	97
4095	3/16/2016	Sandt DOT	Plaistow	Rt 125	Perpendicular	Concrete	Good	Yes	Yes	Yes	No	No	No	Yes	Yes	Yes	Yes	Less than 8.33%	Less than or equal to 2%	Greater than 48 inches	1	4	97
4101	3/16/2016	Sandt DOT	Plaistow	Rt 125	Perpendicular	Concrete	Good	Yes	Yes	Yes	No	No	No	Yes	Yes	NA	Yes	Less than 8.33%	Less than or equal to 2%	Greater than 48 inches	1	4	97
4102	3/16/2016	Sandt DOT	Plaistow	Rt 125	Perpendicular	Concrete	Good	Yes	Yes	Yes	No	No	No	Yes	Yes	NA	Yes	Less than 8.33%	Less than or equal to 2%	Greater than 48 inches	1	4	97
4114	3/17/2016	Wilkinson District 1	Lincoln	Rte. 112	Parallel	Concrete	Good	Yes	Yes	Yes	No	No	No	Yes	Yes	NA	Yes	Less than 8.33%	Less than or equal to 2%	Greater than 48 inches	1	4	97
4116	3/18/2016	Sandt DOT	Plaistow	Rt 125	Parallel	Concrete	Good	Yes	Yes	Yes	No	No	No	Yes	Yes	NA	Yes	Less than 8.33%	Less than or equal to 2%	Greater than 48 inches	1	4	97
4117	3/18/2016	Sandt DOT	Plaistow	Rt 125	Parallel	Concrete	Good	Yes	Yes	Yes	No	No	No	Yes	Yes	NA	Yes	Less than 8.33%	Less than or equal to 2%	Greater than 48 inches	1	4	97
4118	3/18/2016	Sandt DOT	Plaistow	Rt 125	Parallel	Concrete	Good	Yes	Yes	Yes	No	No	No	Yes	Yes	NA	Yes	Less than 8.33%	Less than or equal to 2%	Greater than 48 inches	1	4	97
4119	3/18/2016	Sandt DOT	Plaistow	Rt 125	Parallel	Concrete	Good	Yes	Yes	Yes	No	No	No	Yes	Yes	NA	Yes	Less than 8.33%	Less than or equal to 2%	Greater than 48 inches	1	4	97
4120	3/18/2016	Sandt DOT	Plaistow	Rt 125	Perpendicular	Concrete	Good	Yes	Yes	Yes	No	No	No	Yes	Yes	NA	Yes	Less than 8.33%	Less than or equal to 2%	Greater than 48 inches	1	4	97
4122	3/18/2016	Sandt DOT	Plaistow	Rt 125	Perpendicular	Concrete	Good	Yes	Yes	Yes	No	No	No	Yes	Yes	NA	Yes	Less than 8.33%	Less than or equal to 2%	Greater than 48 inches	1	4	97
4123	3/18/2016	Sandt DOT	Plaistow	Rt 125	Perpendicular	Concrete	Good	Yes	Yes	Yes	No	No	No	Yes	Yes	NA	Yes	Less than 8.33%	Less than or equal to 2%	Greater than 48 inches	1	4	97
4124	3/18/2016	Sandt DOT	Plaistow	Rt 125	Perpendicular	Concrete	Good	Yes	Yes	Yes	No	No	No	Yes	Yes	NA	Yes	Less than 8.33%	Less than or equal to 2%	Greater than 48 inches	1	4	97
4125	3/18/2016	Sandt DOT	Plaistow	Rt 125	Perpendicular	Concrete	Good	Yes	Yes	Yes	No	No	No	Yes	Yes	NA	Yes	Less than 8.33%	Less than or equal to 2%	Greater than 48 inches	1	4	97
4126	3/18/2016	Sandt DOT	Plaistow	Rt 125	Perpendicular	Concrete	Good	Yes	Yes	Yes	No	No	No	Yes	Yes	NA	Yes	Less than 8.33%	Less than or equal to 2%	Greater than 48 inches	1	4	97
4127	3/18/2016	Sandt DOT	Plaistow	Rt 125	Perpendicular	Concrete	Good	Yes	Yes	Yes	No	No	No	Yes	Yes	NA	Yes	Less than 8.33%	Less than or equal to 2%	Greater than 48 inches	1	4	97
4128	3/18/2016	Sandt DOT	Plaistow	Rt 125	Perpendicular	Concrete	Good	Yes	Yes	Yes	No	No	No	Yes	Yes	NA	Yes	Less than 8.33%	Less than or equal to 2%	Greater than 48 inches	1	4	97
4129	3/18/2016	Sandt DOT	Plaistow	Rt 125	Perpendicular	Concrete	Good	Yes	Yes	Yes	No	No	No	Yes	Yes	NA	Yes	Less than 8.33%	Less than or equal to 2%	Greater than 48 inches	1	4	97
4130	3/18/2016	Sandt DOT	Plaistow	Rt 125	Perpendicular	Concrete	Good	Yes	Yes	Yes	No	No	No	Yes	Yes	NA	Yes	Less than 8.33%	Less than or equal to 2%	Greater than 48 inches	1	4	97
4134	3/18/2016	Sandt DOT	Plaistow	Rt 125	Perpendicular	Concrete	Good	Yes	Yes	Yes	No	No	No	Yes	Yes	NA	Yes	Less than 8.33%	Less than or equal to 2%	Greater than 48 inches	1	4	97
4141	3/18/2016	Sandt DOT	Plaistow	Rt 125	Perpendicular	Concrete	Good	Yes	Yes	Yes	No	No	No	Yes	Yes	NA	Yes	Less than 8.33%	Less than or equal to 2%	Greater than 48 inches	1	4	97
4142	3/18/2016	Sandt DOT	Plaistow	Rt 125	Perpendicular	Concrete	Good	Yes	Yes	Yes	No	No	No	Yes	Yes	NA	Yes	Less than 8.33%	Less than or equal to 2%	Greater than 48 inches	1	4	97
4143	3/18/2016	Sandt DOT	Plaistow	Rt 125	Perpendicular	Concrete	Good	Yes	Yes	Yes	No	No	No	Yes	Yes	NA	Yes	Less than 8.33%	Less than or equal to 2%	Greater than 48 inches	1	4	97
5144	3/28/2016	Sandt DOT	Portsmouth	Portsmouth Transportation Center	Perpendicular	Concrete	Good	Yes	Yes	Yes	No	No	No	Yes	Yes	NA	Yes	Less than 8.33%	Less than or equal to 2%	Greater than 48 inches	1	4	97
58	6/17/2015	Sandt DOT	Suncook	Main	Diagonal	Asphalt	Good	Yes	Yes	Yes	No	Yes	No	Yes	Yes	Yes	Yes	Less than 8.33%	Less than or equal to 2%	Greater than 48 inches	1	3	98
2038	10/6/2015	Sandt DOT	Dover	Durham Road	Perpendicular	Asphalt	Good	Yes	Yes	Yes	No	No	No	Yes	Yes	NA	Yes	Less than 8.33%	Less than or equal to 2%	Greater than 48 inches	1	0	100
2039	10/6/2015	Sandt DOT	Dover	Durham Road	Diagonal	Asphalt	Good	Yes	Yes	Yes	No	No	No	Yes	Yes	NA	Yes	Less than 8.33%	Less than or equal to 2%	Greater than 48 inches	1	0	100
70	6/17/2015	Sandt DOT	Allenstown	Main	Diagonal	Asphalt	Good	Yes	Yes	Yes	No	No	No	Yes	Yes	Yes	Yes	Less than 8.33%	Less than or equal to 2%	Greater than 48 inches	1	0	100
71	6/17/2015	Sandt DOT	Allenstown	Main	Parallel	Asphalt	Good	Yes	Yes	Yes	No	No	No	Yes	Yes	NA	Yes	Less than 8.33%	Less than or equal to 2%	Greater than 48 inches	1	0	100
14	6/12/2015	Sandt DOT	Concord	Noble Drive	Diagonal	Asphalt	Good	Yes	Yes	Yes	No	No	No	Yes	Yes	Yes	Yes	Less than 8.33%	Less than or equal to 2%	Greater than 48 inches	1	0	100
2192	10/21/2015	Sandt DOT	Portsmouth	Market Street	Parallel	Asphalt	Good	Yes	Yes	Yes	No	No	No	Yes	Yes	NA	Yes	Less than 8.33%	Less than or equal to 2%	Greater than 48 inches	1	0	100
2193	10/21/2015	Sandt DOT	Portsmouth	Market Street	Parallel	Asphalt	Good	Yes	Yes	Yes	No	No	No	Yes	Yes	NA	Yes	Less than 8.33%	Less than or equal to 2%	Greater than 48 inches	1	0	100
2194	10/21/2015	Sandt DOT	Portsmouth	Market Street	Parallel	Asphalt	Good	Yes	Yes	Yes	No	No	No	Yes	Yes	NA	Yes	Less than 8.33%	Less than or equal to 2%	Greater than 48 inches	1	0	100
2666	12/7/2015	Sandt DOT	New Hampton	132	Perpendicular	Asphalt	Good	Yes	Yes	Yes	No	No	No	Yes	Yes	NA	Yes	Less than 8.33%	Less than or equal to 2%	Greater than 48 inches	1	0	100
2669	12/7/2015	Sandt DOT	New Hampton	132	Perpendicular	Asphalt	Good	Yes	Yes	Yes	No	No	No	Yes	Yes	NA	Yes	Less than 8.33%	Less than or equal to 2%	Greater than 48 inches	1	0	100
2639	12/3/2015	Sandt DOT	Holderness	Bridge Street	Perpendicular	Asphalt	Good	Yes	Yes	Yes	No	No	No	Yes	Yes	NA	Yes	Less than 8.33%	Less than or equal to 2%	Greater than 48 inches	1	0	100
2640	12/3/2015	Sandt DOT	Holderness	Bridge Street	Perpendicular	Asphalt	Good	Yes	Yes	Yes	No	No	No	Yes	Yes	NA	Yes	Less than 8.33%	Less than or equal to 2%	Greater than 48 inches	1	0	100
2641	12/3/2015	Sandt DOT	Holderness	Bridge Street	Perpendicular	Asphalt	Good	Yes	Yes	Yes	No	No	No	Yes	Yes	NA	Yes	Less than 8.33%	Less than or equal to 2%	Greater than 48 inches	1	0	100

OBJECTID_1	OBJECTID	Asse_Date	Organization	Town Name	Road Name	Side of street	Maintained	Repair/Reconst	Surface Material	Sidewalk Condition	Surface Defects	Curb Type	Curb Condition	Gutter Pan	Minimum Curb Depth	Existance of a Buffer	Obstructions	Min Passable Width	Min Vertical Clearance	Change in Level	exceed 0.5"	Maximum Grade	Greatest Cross slope	Number of Curb Cuts	Importance	Ranking	Normalized Ranking percentage
5224	0	11/23/2015	Sandt DOT	Wolfeboro	Rt 109	East	Unknown		Asphalt	Poor	Yes	Granite	Fair	No	1.0	None	Utility Pole	less than 36 inches	Unlimited	Greater than 0.50 inches	Yes	11.0	Greater than 2%	2.0	1.0	170	0
6236	0	12/3/2015	Sandt DOT	Campton	Livermore Rd	West	Unknown		Asphalt	Poor	Yes	Concrete	Poor	No	0.0	None	Fixed Object	36 inches to 60 inches	Greater than 80 inches	Greater than 0.50 inches	Yes	10.0	Greater than 2%	0.0	1.0	158	7
6260	0	12/4/2015	Sandt DOT	Plymouth	Rt 3	West	Unknown		Asphalt	Poor	Yes	Asphalt	Poor	No	1.0	Parking Spaces	Fixed Object	36 inches to 60 inches	Greater than 80 inches	Greater than 0.50 inches	Yes	13.0	Greater than 2%	3.0	1.0	158	7
5214	0	11/23/2015	Sandt DOT	Wolfeboro	Rt 109	North-West	Unknown		Asphalt	Poor	Yes	Granite	Fair	No	1.0	None	Utility Pole	36 inches to 60 inches	Unlimited	Greater than 0.50 inches	Yes	11.0	Greater than 2%	8.0	1.0	155	9
4256	41226	8/7/2015	Sandt DOT	New Boston	Meetinghouse Hill Road	South	Unknown		Asphalt	Poor	Yes	Granite	Poor	No	2.0	None	Vegetation	less than 36 inches	Less than 80in	Greater than 0.50 inches	Yes	8.0	Greater than 2%	0.0	1.0	153	10
6504	0	12/14/2015	Sandt DOT	Tilton	Church Street	South	Unknown		Asphalt	Poor	Yes	None	N/A	No	0.0	Grass Strip	None	less than 36 inches	Greater than 80 inches	Greater than 0.50 inches	Yes	12.0	Greater than 2%	0.0	1.0	153	10
6559	0	12/15/2015	Sandt DOT	Tilton	School Street	West	Unknown		Asphalt	Poor	Yes	None	N/A	No	0.0	Grass Strip	None	less than 36 inches	Greater than 80 inches	Greater than 0.50 inches	Yes	10.0	Greater than 2%	0.0	1.0	153	10
6657	0	12/18/2015	Sandt DOT	Center Harbor	Main Street	South	Unknown		Asphalt	Poor	Yes	Granite	Fair	No	3.0	Grass Strip	None	less than 36 inches	Greater than 80 inches	Greater than 0.50 inches	Yes	35.0	Greater than 2%	1.0	1.0	153	10
4453	41426	9/1/2015	Sandt DOT	Boscawen	N Main	East	Unknown		Asphalt	Poor	Yes	Granite	Good	No	1.0	Grass Strip	Vegetation	less than 36 inches	Less than 80in	0.25 inches to 0.50 inches	Yes	9.0	Greater than 2%	5.0	1.0	151	11
6303	0	12/7/2015	Wilkinson District 1	Jefferson	Rte. 115A	East	Unknown		Asphalt	Poor	Yes	None	N/A	No	0.0	Grass Strip	Vegetation	less than 36 inches	Greater than 80 inches	Greater than 0.50 inches	No	11.0	Greater than 2%	0.0	1.0	149	12
6668	0	12/18/2015	Sandt DOT	Meredith	Rt 25	South-East	Unknown		Asphalt	Poor	Yes	Granite	Fair	No	1.0	None	Utility Pole	less than 36 inches	Unlimited	Greater than 0.50 inches	Yes	1.0	Greater than 2%	0.0	1.0	145	15
4373	41345	8/19/2015	Sandt DOT	Peterborough	Granite Street	West	Unknown		Asphalt	Poor	Yes	Granite	Poor	No	0.0	None	Vegetation	less than 36 inches	Greater than 80 inches	Greater than 0.50 inches	Yes	7.0	Greater than 2%	6.0	1.0	144	15
10125	0	3/30/2016	Sandt DOT	Plaistow	Elm Street	South-East	Unknown		Asphalt	Poor	Yes	None	Good	No	0.0	Grass Strip	Vegetation	less than 36 inches	Greater than 80 inches	Greater than 0.50 inches	Yes	1.0	Greater than 2%	0.0	1.0	144	15
894	3262	7/24/2015	Sandt DOT	Auburn	Manchester Road	Northeast	Unknown		Asphalt	Fair	Yes	Asphalt	Good	No	5.0	None	Utility Pole	less than 36 inches	Less than 80in	Greater than 0.50 inches	Yes	3.0	Greater than 2%	0.0	1.0	142	16
6648	0	12/17/2015	Sandt DOT	Tilton	132	East	Unknown		Asphalt	Poor	Yes	None	Poor	No	0.0	Grass Strip	Water	36 inches to 60 inches	Greater than 80 inches	Greater than 0.50 inches	Yes	18.0	Greater than 2%	0.0	1.0	142	16
4947	42761	10/27/2015	Sandt DOT	Hampton	Ocean Blvd	Northwest	Unknown		Asphalt	Poor	Yes	Asphalt	Fair	No	0.0	None	Vegetation	less than 36 inches	Unlimited	Greater than 0.50 inches	Yes	1.0	Greater than 2%	9.0	1.0	141	17
799	2298	7/17/2015	Sandt DOT	Pittsfield	Main Street	Southwest	Unknown		Asphalt	Poor	Yes	None	N/A	No	0.0	Grass Strip	Vegetation	less than 36 inches	Less than 80in	0.25 inches to 0.50 inches	Yes	8.0	Greater than 2%	0.0	1.0	141	17
4325	41297	8/14/2015	Sandt DOT	Hillsborough	Bridge Street	Northeast	Unknown		Asphalt	Poor	Yes	Asphalt	Fair	No	2.0	None	None	less than 36 inches	Unlimited	0.25 inches to 0.50 inches	Yes	13.0	Greater than 2%	4.0	1.0	138	19
4999	42894	10/27/2015	Nichols district 1	Colebrook	Rte 3	East	Unknown		Asphalt	Poor	Yes	Granite	Fair	No	2.0	None	Utility Pole	36 inches to 60 inches	Greater than 80 inches	Greater than 0.50 inches	Yes	12.6	Greater than 2%	5.0	1.0	138	19
6290	0	12/4/2015	Sandt DOT	Ashland	Main Street	South-West	Unknown		Asphalt	Poor	Yes	None	N/A	No	0.0	None	None	36 inches to 60 inches	Greater than 80 inches	Greater than 0.50 inches	Yes	15.0	Greater than 2%	0.0	1.0	138	19
6298	0	12/4/2015	Sandt DOT	Ashland	Main Street	South-West	Unknown		Asphalt	Poor	Yes	Granite	Good	No	1.0	Parking Spaces	None	36 inches to 60 inches	Greater than 80 inches	Greater than 0.50 inches	Yes	10.0	Greater than 2%	3.0	1.0	138	19
6444	0	12/10/2015	Wilkinson District 1	Bethlehem	Rte. 142	East	Unknown		Asphalt	Poor	Yes	Asphalt	Poor	No	0.5	None	Utility Pole	36 inches to 60 inches	Greater than 80 inches	Greater than 0.50 inches	No	10.0	Greater than 2%	4.0	1.0	138	19
6492	0	12/14/2015	Sandt DOT	Bristol	3A	East	Unknown		Asphalt	Poor	Yes	Granite	Poor	No	1.0	Parking Spaces	None	36 inches to 60 inches	Greater than 80 inches	Greater than 0.50 inches	Yes	12.0	Greater than 2%	9.0	1.0	138	19
6493	0	12/14/2015	Sandt DOT	Bristol	3A	West	Unknown		Asphalt	Poor	Yes	Granite	Poor	No	3.0	Grass Strip	None	36 inches to 60 inches	Greater than 80 inches	Greater than 0.50 inches	Yes	19.0	Greater than 2%	1.0	1.0	138	19
6589	0	12/16/2015	Wilkinson District 1	Littleton	Cottage Street-Rtes. 302,18,116	East	Unknown		Asphalt	Poor	Yes	Granite	Fair	No	4.0	Parking Spaces	Fixed Object	36 inches to 60 inches	Greater than 80 inches	Greater than 0.50 inches	No	11.0	Greater than 2%	3.0	1.0	138	19
6718	0	12/16/2015	Sandt DOT	Tilton	Rt 3	North	Unknown		Asphalt	Poor	Yes	None	Good	No	0.0	Grass Strip	None	36 inches to 60 inches	Greater than 80 inches	Greater than 0.50 inches	Yes	13.0	Greater than 2%	0.0	1.0	138	19
4722	41695	10/5/2015	Sandt DOT	Rollinsford	Main Street	North	Unknown		Asphalt	Fair	Yes	Granite	Fair	No	2.0	None	Vegetation	36 inches to 60 inches	Less than 80in	0.25 inches to 0.50 inches	Yes	12.0	Greater than 2%	5.0	1.0	136	20
4261	41231	8/10/2015	Sandt DOT	Hillsborough	N Main Street	Northwest	Unknown		Asphalt	Poor	Yes	None	N/A	No	0.0	Grass Strip	None	36 inches to 60 inches	Unlimited	Greater than 0.50 inches	Yes	10.0	Greater than 2%	0.0	1.0	135	21
4319	41291	8/14/2015	Sandt DOT	Wilton	Prince Street	East	Unknown		Asphalt	Poor	Yes	Asphalt	Good	No	4.0	None	None	36 inches to 60 inches	Unlimited	Greater than 0.50 inches	Yes	24.0	Greater than 2%	3.0	1.0	135	21
4407	41379	8/27/2015	Sandt DOT	Jaffrey	Peterborough Street	Northwest	Unknown		Asphalt	Poor	Yes	Granite	Good	No	4.0	None	None	36 inches to 60 inches	Unlimited	Greater than 0.50 inches	Yes	10.0	Greater than 2%	5.0	1.0	135	21
6661	0	12/18/2015	Sandt DOT	Meredith	Rt 25	West	Unknown		Asphalt	Poor	Yes	None	Good	No	0.0	None	None	36 inches to 60 inches	Unlimited	Greater than 0.50 inches	Yes	10.0	Greater than 2%	0.0	1.0	135	21
6430	0	12/10/2015	Nichols district 1	Lancaster	Rte 135	South	Unknown		Asphalt	Poor	Yes	Asphalt	Poor	No	0.0	None	Vegetation	36 inches to 60 inches	Greater than 80 inches	Greater than 0.50 inches	No	8.5	Greater than 2%	4.0	1.0	134	21
545	2044	6/25/2015	Sandt DOT	Hooksett	Mammoth	East	Unknown		Asphalt	Good	Yes	Granite	Good	No	6.0	Grass Strip	Vegetation	less than 36 inches	Less than 80in	Greater than 0.50 inches	No	9.0	Greater than 2%	3.0	1.0	133	22
791	2290	7/17/2015	Sandt DOT	Pittsfield	Depot Street	South	Unknown		Asphalt	Poor	Yes	Granite	Fair	No	2.0	None	Utility Pole	36 inches to 60 inches	Greater than 80 inches	Greater than 0.50 inches	Yes	3.0	Greater than 2%	4.0	1.0	133	22
6259	0	12/4/2015	Sandt DOT	Plymouth	Rt 3	West	Unknown		Asphalt	Poor	Yes	Asphalt	Poor	No	1.0	Parking Spaces	Fixed Object	36 inches to 60 inches	Greater than 80 inches	Greater than 0.50 inches	Yes	1.0	Greater than 2%	5.0	1.0	133	22
6286	0	12/4/2015	Sandt DOT	Ashland	Main Street	North-East	Unknown		Asphalt	Poor	Yes	Granite	Good	No	1.0	Parking Spaces	Utility Pole	36 inches to 60 inches	Greater than 80 inches	Greater than 0.50 inches	Yes	3.0	Greater than 2%	3.0	1.0	133	22
6522	0	12/14/2015	Patch district 1	Littleton	Rte 302	North	Unknown		Asphalt	Poor	Yes	Granite	Fair	No	6.0	Bicycle Lane	Fixed Object	36 inches to 60 inches	Greater than 80 inches	Greater than 0.50 inches	Yes	4.0	Greater than 2%	4.0	1.0	133	22
6556	0	12/15/2015	Sandt DOT	Tilton	School Street	West	Unknown		Concrete	Poor	Yes	Granite	Fair	No	1.0	None	None	Greater than 60 inches	Greater than 80 inches	Greater than 0.50 inches	Yes	13.0	Greater than 2%	0.0	1.0	132	22
6564	0	12/15/2015	Sandt DOT	Tilton	School Street	East	Unknown		Concrete	Poor	Yes	Granite	Fair	No	1.0	None	None	Greater than 60 inches	Greater than 80 inches	Greater than 0.50 inches	Yes	13.0	Greater than 2%	0.0	1.0	132	22
561	2060	6/26/2015	Sandt DOT	Manchester	Amoskeag	Northeast	Unknown		Asphalt	Fair	Yes	None	N/A	No	0.0	Grass Strip	Vegetation	less than 36 inches	Unlimited	Greater than 0.50 inches	No	11.0	Greater than 2%	0.0	1.0	131	23
6300	0	12/7/2015	Wilkinson District 1	Jefferson	Rte. 2	South-West	Unknown		Asphalt	Poor	Yes	Asphalt	Poor	No	3.0	None	Drain	36 inches to 60 inches	Unlimited	Greater than 0.50 inches	No	10.0	Greater than 2%	5.0	1.0	131	23
6660	0	12/18/2015	Sandt DOT	Meredith	Rt 25	West	Unknown		Asphalt	Poor	Yes	None	Good	No	0.0	Grass Strip	Vegetation	less than 36 inches	Unlimited	Greater than 0.50 inches	Yes	5.0	Less than or equal to 2%	0.0	1.0	131	23
830	3198	7/22/2015	Sandt DOT	Derry	W Broadway	Southeast	Unknown		Asphalt	Fair	Yes	Granite	Good	No	2.0	None	Utility Pole	less than 36 inches	Unlimited	Greater than 0.50 inches	Yes	3.0	Greater than 2%	0.0	1.0	130	24
4438	41410	8/31/2015	Sandt DOT	Hinsdale	Canal Street	South	Unknown		Asphalt	Poor	Yes	Granite	Good	No	3.0	None	Utility Pole	36 inches to 60 inches	Unlimited	Greater than 0.50 inches	Yes	3.0	Greater than 2%	5.0	1.0	130	24
5256	0	11/24/2015	Sandt DOT	Sandwich	Rt 113	North	Unknown		Asphalt	Poor	Yes	Granite	Poor	No	1.0	None	Utility Pole	36 inches to 60 inches	Unlimited	Greater than 0.50 inches	Yes	4.0	Greater than 2%	8.0	1.0	130	24
4959	42774	10/29/2015	Sandt DOT	Hampton	Ocean Blvd	West	Unknown		Asphalt	Poor	Yes	Asphalt	Poor	No	0.0	None	Water	less than 36 inches	Unlimited	Greater than 0.50 inches	Yes	1.0	Greater than 2%	18.0	1.0	129	24
870	3238	7/23/2015	Sandt DOT	Derry	S Main St.	Northeast	Unknown		Asphalt	Good	Yes	None	N/A	No	0.0	Grass Strip	Vegetation	36 inches to 60 inches	Greater than 80 inches	Greater than 0.50 inches	Yes	9.0	Greater than 2%	0.0	1.0	129	24
6218	0	12/1/2015	Wilkinson District 1	Errol	Rte. 26	North	Unknown		Asphalt	Poor	Yes	Asphalt	Fair	No	4.0	None	Vegetation	36 inches to 60 inches	Greater than 80 inches	Greater than 0.50 inches	Yes	6.0	Greater than 2%	12.0	1.0	129	24
484	1048	6/16/2015	Sandt DOT	Pembroke	Broadway	West	Unknown		Asphalt	Fair	Yes	Granite	Good	No	2.0	Grass Strip	Vegetation	36 inches to 60 inches	Less than 80in	15.0 Greater than 2%	Yes	12.0	1.0	128	25
4606	41579	9/23/2015	Sandt DOT	Enfield	Rt 4A	West	Unknown		Asphalt	Poor	Yes	None	N/A	No	0.0	None	None	less than 36 inches	Greater than 80 inches	Greater than 0.50 inches	Yes	5.0	Greater than 2%	0.0	1.0	128	25
6480	0	12/14/2015	Sandt DOT	Bristol	Rt 104	South-East	Unknown		Asphalt	Poor	Yes	None	Good	No	0.0	Grass Strip	None	less than 36 inches	Greater than 80 inches	Greater than 0.50 inches	Yes	5.0	Greater than 2%	0.0	1.0	128	25
6505	0	12/14/2015	Sandt DOT	Tilton	River Road	South	Unknown		Asphalt	Poor	Yes	None	N/A	No	0.0	Grass Strip	None	less than 36 inches	Greater than 80 inches	Greater than 0.50 inches	Yes	6.0	Greater than 2%	0.0	1.0	128	25
6584	0	12/16/2015	Wilkinson District 1	Littleton	Cottage Street-Rtes. 302,18,116	West	Unknown		Asphalt	Poor	Yes	None	N/A	No	0.0	Bicycle Lane	Utility Pole	36 inches to 60 inches	Greater than 80 inches	Greater than 0.50 inches	No	12.0	Less than or equal to 2%	0.0	1.0	128	25
6645	0	12/17/2015	Sandt DOT	Tilton	Winter Street	West	Unknown		Asphalt	Poor	Yes	None	Poor	No	0.0	Grass Strip	None	less than 36 inches	Unlimited	Greater than 0.50 inches	Yes	15.0	Greater than 2%	0.0	1.0	128	25
6809	0	1/7/2016	Sandt DOT	New London	Rt 114	North-East	Unknown		Asphalt	Poor	Yes	Granite	Good	No	4.0	Grass Strip	None	less than 36 inches	Greater than 80 inches	Greater than 0.50 inches	Yes	6.0	Greater than 2%	3.0	1.0	128	25
10126	0	3/30/2016	Sandt DOT	Plaistow	Elm Street	South-East	Unknown		Asphalt	Poor	Yes	None	Good	No	0.0000000000	Grass Strip	None	36 inches to 60 inches	Greater than 80 inches	Greater than 0.50 inches	Yes	13.0	Less than or equal to 2%	0.0	1.0	128	25
4546	41519	9/17/2015	Sandt DOT	Newport	Rt 10	West	Unknown		Concrete	Poor	Yes	Asphalt	Fair	No	2.0	None	None	36 inches to 60 inches	Unlimited	0.25 inches to 0.50 inches	Yes	11.0	Greater than 2%	1.0	1.0	127	25
5003	42898	10/27/2015	Nichols district 1	Colebrook	Rte 3	East	Unknown		Asphalt	Poor	Yes	Granite	Fair	No	6.0	None	Utility Pole	Greater than 60 inches	Less than 80in	Greater than 0.50 inches	No	13.6	Less than or equal to 2%	0.0	1.0	127	25
6494	0	12/14/2015	Sandt DOT	Bristol	3A	West	Unknown		Asphalt	Poor	Yes	Granite	Poor	No	3.0	Grass Strip	None	36 inches to 60 inches	Greater than 80 inches	0.25 inches to 0.50 inches	Yes	9.0	Greater than 2%	0.0	1.0	126	26
6357	0	12/8/2015	Nichols district 1	Lancaster	Rte 2 and Rte 3	East	Unknown		Concrete	Poor	Yes	Granite	Poor	No	6.0	Parking Spaces	Fixed Object	36 inches to 60 inches	Less than 80in	Greater than 0.50 inches	No	1.0	Greater than 2%	3.0	1.0	126	26
6360	0	12/8/2015	Nichols district 1	Lancaster	Rte 2 and Rte 3	East	Unknown		Concrete	Poor	Yes	Granite	Poor	No	1.0	Parking Spaces	Utility Pole	36 inches to 60 inches	Less than 80in	Greater than 0.50 inches	No	1.0	Greater than 2%	1.0	1.0	126	26
4539	41512	9/16/2015	Sandt DOT	Bradford	114	West	Unknown		Asphalt	Poor	Yes	None	N/A	No	0.0	None	None	less than 36 inches	Unlimited	Greater than 0.50 inches	Yes	5.0	Greater than 2%	0.0	1.0	125	26
5199	0	11/20/2015	Sandt DOT	Wakefield	Rt 109	South-East	Unknown		Asphalt	Poor	Yes	None	N/A	No	0.0	None	None	less than 36 inches	Unlimited	Greater than 0.50 inches	Yes	7.0	Greater than 2%	0.0	1.0	125	26
5255	0	11/24/2015	Sandt DOT	Sandwich	Rt 113	North	Unknown		Asphalt	Poor	Yes	Granite	Poor	No	7.0	None	None	36 inches to 60 inches	Unlimited	Greater than 0.50 inches	Yes	14.0	Less than or equal to 2%	0.0	1.0	125	26
6339	0	12/7/2015	Wilkinson District 1	Whitefield	Rte. 3	South	Unknown		Asphalt	Poor	Yes	None	Good	No	0.0	Bicycle Lane	Vegetation	36 inches to 60 inches	Greater than 80 inches	Greater than 0.50 inches	No	14.0	Less than or equal to 2%	0.0	1.0	124	27
4570	41543	9/18/2015	Sandt DOT	Plainfield	Main Street	North	Unknown		Asphalt	Poor	Yes	None	N/A	No	0.0	Grass Strip	None	36 inches to 60 inches	Unlimited	0.25 inches to 0.50 inches	Yes	10.0	Greater than 2%	0.0	1.0	123	28
5130	0	11/16/2015	Sandt DOT	Tamworth	113	North	Unknown		Asphalt	Fair	Yes	Granite	Good	No	4.0	None	None	36 inches to 60 inches	Greater than 80 inches	Greater than 0.50 inches	Yes	15.0	Greater than 2%	1.0	1.0	123	28
5216	0	11/23/2015	Sandt DOT	Wolfeboro	Rt 109	North-West	Unknown		Asphalt	Fair	Yes	Granite	Fair	No	1.0	None	None	36 inches to 60 inches	Greater than 80 inches	Greater than 0.50 inches	Yes	11.0	Greater than 2%	4.0	1.0	123	28
5225	0	11/23/2015	Sandt DOT	Wolfeboro	Rt 109	North-West	Unknown		Asphalt	Fair	Yes	Granite	Fair	No	1.0	None	None	36 inches to 60 inches	Greater than 80 inches	Greater than 0.50 inches	Yes	11.0	Greater than 2%	6.0	1.0	123	28
6615	0	12/15/2015	Wilkinson District 1	Littleton	Rte. 116	South	Unknown		Asphalt	Fair	Yes	Granite	Fair	No	4.0	None	Fixed Object	36 inches to 60 inches	Greater than 80 inches	Greater than 0.50 inches	No	15.0	Greater than 2%	2.0	1.0	123	28
6693	0	12/22/2015	NM SWRPC	Troy	High st	South	Unknown		Asphalt	Poor	Yes	Granite	Fair	No	0.0	None	None	less than 36 inches	Greater than 80 inches	Greater than 0.50 inches	No	11.0	Less than or equal to 2%	0.0	1.0	123	28
6769	0	1/5/2016	Sandt DOT	Belmont	Rt 140	South	Unknown		Asphalt	Fair	Yes	Granite	Good	No	4.0	None	None	36 inches to 60 inches	Greater than 80 inches	Greater than 0.50 inches	Yes	9.0	Greater than 2%	1.0	1.0	123	28
6771	0	1/5/2016	Sandt DOT	Belmont	Rt 140	North	Unknown		Asphalt	Fair	Yes	Granite	Good	No	4.0	None	None	36 inches to 60 inches	Greater than 80 inches	Greater than 0.50 inches	Yes	12.0	Greater than 2%	0.0	1.0	123	28
856	3224	7/23/2015	Sandt DOT	Derry	E Broadway	Southeast	Unknown		Asphalt	Fair	Yes	Granite	Good	No	5.0	None	Utility Pole	less than 36 inches	Less than 80in	Level	Yes	8.0	Greater than 2%	9.0	1.0	122	28
4717	41690	10/5/2015	Sandt DOT	Rollinsford	Main Street	South	Unknown		Asphalt	Fair	Yes	None	N/A	No	0.0	Grass Strip	None	less than 36 inches	Greater than 80 inches	Less than 0.25 inches	Yes	10.0	Greater than 2%	0.0	1.0	122	28
4997	42892	10/26/2015	Wilkinson district 1	Colebrook	Rte 3	East	Unknown		Asphalt	Poor	Yes	Granite	Fair	No	3.0	None	Utility Pole	36 inches to 60 inches	Less than 80in	Greater than 0.50 inches	No	5.0	Greater than 2%	10.0	1.0	122	28
6310	0	12/7/2015	Wilkinson District 1	Jefferson	Rte. 2	North-East	Unknown		Asphalt	Fair	Yes	None	N/A	No	0.0	Grass Strip	Vegetation	less than 36 inches	Greater than 80 inches	0.25 inches to 0.50 inches	No	13.0	Greater than 2%	0.0	1.0	122	28
6591	0	12/16/2015	Wilkinson District 1	Littleton	Cottage Street-Rtes. 302,18,116	West	Unknown		Concrete	Fair	Yes	Granite	Good	No	5.0	Bicycle Lane	Fixed Object	36 inches to 60 inches	Greater than 80 inches	Greater than 0.50 inches	Yes	6.0	Greater than 2%	0.0	1.0	122	28
6829	0	1/11/2016	Sandt DOT	Meredith	Rt 3	East	Unknown		Concrete	Poor	Yes	Concrete	Good	No	6.0	None	None	less than 36 inches	Greater than 80 inches	Greater than 0.50 inches	Yes	5.0	Less than or equal to 2%	0.0	1.0	122	28
6832	0	1/11/2016	Sandt DOT	Meredith	Rt 3	West	Unknown		Concrete	Poor	Yes	Concrete	Good	No	6.0	None	None	less than 36 inches	Greater than 80 inches	Greater than 0.50 inches	Yes	5.0	Less than or equal to 2%	0.0	1.0	122	28
6284	0	12/4/2015	Sandt DOT	Ashland	Rt 3	South	Unknown		Asphalt	Fair	Yes	Granite	Good	No	4.0	Parking Spaces	Utility Pole	Greater than 60 inches	Greater than 80 inches	0.25 inches to 0.50 inches	Yes	12.0	Greater than 2%	0.0	1.0	121	29
6728	0	12/24/2015	Sandt DOT	New London	Rt 114	South-West	Unknown	Stamped Asphalt	Poor	Yes	Granite	Fair	No	3.0	Parking Spaces	None	36 inches to 60 inches	Greater than 80 inches	Greater than 0.50 inches	Yes	4.0	Greater than 2%	0.0	1.0	121	29
781	2280	7/17/2015	Sandt DOT	Pittsfield	Concord Hill Road	Southeast	Unknown	Asphalt	Fair	Yes	Asphalt	Good	No	3.0	Grass Strip	None	36 inches to 60 inches	Unlimited	Greater than 0.50 inches	Yes	18.0	Greater than 2%	1.0	1.0	120	29
4408	41380	8/27/2015	Sandt DOT	Jaffrey	Peterborough Street	Northwest	Unknown	Asphalt	Fair	Yes	Granite	Fair	No	4.0	None	None	36 inches to 60 inches	Unlimited	Greater than 0.50 inches	Yes	10.0	Greater than 2%	10.0	1.0	120	29
4901	42714	10/26/2015	Sandt DOT	North Hampton	Ocean Blvd	East	Unknown	Asphalt	Fair	Yes	None	N/A	No	0.0	Grass Strip	None	less than 36 inches	Unlimited	Less than 0.25 inches	Yes	10.0	Greater than 2%	0.0	1.0	119	30
9097	0	3/17/2016	Wilkinson District 1	Woodstock	Rte. 3	West	Unknown	Concrete	Fair	Yes	Granite	Fair	No	0.5000000000	None	Fixed Object	36 inches to 60 inches	Unlimited	Greater than 0.50 inches	Yes	3.0	Greater than 2%	0.0	1.0	119	30
566	2065	6/26/2015	Sandt DOT	Manchester	2nd	Southeast	Unknown	6/26/2015 Asphalt	Good	Yes	Granite	Good	Yes	5.0	None	Drain	36 inches to 60 inches	Greater than 80 inches	Greater than 0.50 inches	Yes	16.0	Less than or equal to 2%	2.0	1.0	119	30
4408	41279	8/13/2015	Sandt DOT	Wilton	Main Street	South	Unknown	Asphalt	Poor	Yes	Granite	Fair	No	5.0	None	Moveable Objects	less than 36 inches	Less than 80in	0.25 inches to 0.50 inches	Yes	3.0	Less than or equal to 2%	3.0	1.0	119	30
10128	0	3/30/2016	Sandt DOT	Plaistow	Main Street	West	Unknown	Asphalt	Poor	Yes	None	N/A	No	0.0000000000	Grass Strip	Vegetation	36 inches to 60 inches	Greater than 80 inches	Greater than 0.50 inches	Yes	1.0	Less than or equal to 2%	0.0	1.0	119	30
4761	41734	10/7/2015	Sandt DOT	Newington	Gosling Road	South	Unknown	Asphalt	Poor	Yes	Granite	Good	No	2.0	None	Utility Pole	36 inches to 60 inches	Unlimited	0.25 inches to 0.50 inches	Yes	2.0	Greater than 2%	1.0	1.0	118	31
485	1049	6/16/2015	Sandt DOT	Pembroke	Pembroke Road/Main Street	West	Unknown	Asphalt	Good	Yes	Granite	Good	No	5.0	Grass Strip	Vegetation	36 inches to 60 inches	Less than 80in	Greater than 0.50 inches	No	15.0	Greater than 2%	3.0	1.0	118	31
755	2254	7/15/2015	Sandt DOT	Salem	Salem Rest Area	North	Unknown	Asphalt	Fair	Yes	Granite	Good	No	5.0	None	Vegetation	less than 36 inches	Less than 80in	Level	Yes	0.0	Greater than 2%	2.0	1.0	118	31
6238	0	12/3/2015	Sandt DOT	Campton	Livermore Rd	South-West	Unknown	Asphalt	Poor	Yes	None	N/A	No	0.0	None	None	less than 36 inches	Greater than 80 inches	Greater than 0.50 inches	Yes	8.0	Less than or equal to 2%	0.0	1.0	118	31
6240	0	12/3/2015	Sandt DOT	Campton	Livermore Rd	South-West	Unknown	Asphalt	Poor	Yes	None	N/A	No	0.0	Grass Strip	None	less than 36 inches	Greater than 80 inches	Greater than 0.50 inches	Yes	2.0	Less than or equal to 2%	0.0	1.0	118	31
6333	0	12/7/2015	Sandt DOT	New Hampton	132	North	Unknown	Asphalt	Poor	Yes	None	N/A	No	0.0	Grass Strip	None	less than 36 inches	Greater than 80 inches	Greater than 0.50 inches	Yes	1.0	Less than or equal to 2%	0.0	1.0	118	31
6374	0	12/8/2015	Melendy District 1	Whitefield	Rte. 3	East	Unknown	Asphalt	Poor	Yes	None	N/A	No	0.0	None	None	36 inches to 60 inches	Greater than 80 inches	Greater than 0.50 inches	No	10.0	Greater than 2%	0.0	1.0	118	31
6382	0	12/8/2015	Melendy District 1	Whitefield	Rte. 142	West	Unknown	Asphalt	Poor	Yes	None	N/A	No	0.0	Other	None	36 inches to 60 inches	Greater than 80 inches	Greater than 0.50 inches	No	13.0	Greater than 2%	0.0	1.0	118	31
6383	0	12/8/2015	Melendy District 1	Whitefield	Rte. 142	West	Unknown	Asphalt	Poor	Yes	None	N/A	No	0.0	Grass Strip	None	36 inches to 60 inches	Greater than 80 inches	Greater than 0.50 inches	No	14.0	Greater than 2%	0.0	1.0	118	31
6499	0	12/14/2015	Sandt DOT	Tilton	Rt 3	East	Unknown	Asphalt	Poor	Yes	None	N/A	No	0.0	Grass Strip	None	less than 36 inches	Greater than 80 inches	Greater than 0.50 inches	Yes	2.0	Less than or equal to 2%	0.0	1.0	118	31
6503	0	12/14/2015	Sandt DOT	Tilton	Rt 3	East	Unknown	Asphalt	Poor	Yes	None	N/A	No	0.0	Grass Strip	None	less than 36 inches	Greater than 80 inches	Greater than 0.50 inches	Yes	2.0	Less than or equal to 2%	0.0	1.0	118	31
6585

6719	0	12/16/2015	Sandt DOT	Tilton	Rt 3	North	Unknown		Asphalt	Poor	Yes	None	Good	No		0.0	Grass Strip	None	36 inches to 60 inches	Greater than 80 inches	Greater than 0.50 inches	Yes	3.0	Greater than 2%	0.0	1.0	113	34
6720	0	12/16/2015	Sandt DOT	Tilton	Rt 3	South	Unknown		Asphalt	Poor	Yes	Granite	Poor	No		0.0	Grass Strip	None	36 inches to 60 inches	Greater than 80 inches	Greater than 0.50 inches	Yes	1.0	Greater than 2%	0.0	1.0	113	34
6733	0	12/28/2015	Sandt DOT	Meredith	Rt 3	East	Unknown		Asphalt	Fair	Yes	Granite	Fair	No		4.0	Grass Strip	None	36 inches to 60 inches	Greater than 80 inches	Greater than 0.50 inches	Yes	1.0	Greater than 2%	10.0	1.0	113	34
7869	0	1/15/2016	Sandt DOT	Durham	Rt 108	East	Unknown		Asphalt	Fair	Yes	None	N/A	No		0.0	Grass Strip	None	36 inches to 60 inches	Greater than 80 inches	Greater than 0.50 inches	Yes	11.0	Less than or equal to 2%	0.0	1.0	113	34
9001	0	2/22/2016	Sandt DOT	Laconia	Rt 3	North-East	Unknown		Asphalt	Poor	Yes	None	N/A	No		0.0	Grass Strip	None	36 inches to 60 inches	Greater than 80 inches	Greater than 0.50 inches	Yes	3.0	Greater than 2%	0.0	1.0	113	34
476	1040	6/11/2015	Sandt DOT	Pembroke	Pembroke Road	Northeast	Unknown		Asphalt	Fair	Yes	Granite	Good	No		4.0	None	Fixed Object	less than 36 inches	Less than 80in	Greater than 0.50 inches	No	1.0	Less than or equal to 2%	11.0	1.0	112	34
478	1042	6/15/2015	Sandt DOT	Pembroke	Pembroke Road	Northeast	Unknown		Asphalt	Good	Yes	Granite	Good	No		4.0	None	Fixed Object	less than 36 inches	Less than 80in	Greater than 0.50 inches	No	3.0	Greater than 2%	12.0	1.0	112	34
632	2131	6/30/2015	Sandt DOT	Manchester	Hanover Street	North	Unknown		Asphalt	Fair	Yes	Granite	Good	No		4.0	Parking Spaces	Utility Pole	less than 36 inches	Less than 80in	Greater than 0.50 inches	No	3.0	Less than or equal to 2%	12.0	1.0	112	34
783	2282	7/17/2015	Sandt DOT	Pittsfield	River	East	Unknown		Asphalt	Fair	Yes	Granite	Good	No		2.0	None	Vegetation	36 inches to 60 inches	Less than 80in	Less than 0.25 inches	No	14.0	Greater than 2%	0.0	1.0	112	34
4255	41225	8/7/2015	Sandt DOT	New Boston	High Street	East	Unknown		Asphalt	Poor	Yes	None	N/A	No		0.0	None	None	less than 36 inches	Greater than 80 inches	Less than 0.25 inches	Yes	4.0	Greater than 2%	0.0	1.0	112	34
832	3200	7/22/2015	Sandt DOT	Derry	W Broadway	Southeast	Unknown		Asphalt	Poor	Yes	Granite	Fair	No		2.0	Grass Strip	Utility Pole	36 inches to 60 inches	Greater than 80 inches	0.25 inches to 0.50 inches	Yes	2.0	Less than or equal to 2%	2.0	1.0	111	35
4206	41175	7/31/2015	Sandt DOT	Henniker	Maple Street	West	Unknown		Asphalt	Fair	Yes	None	N/A	No		0.0	Grass Strip	None	36 inches to 60 inches	Greater than 80 inches	0.25 inches to 0.50 inches	Yes	14.0	Greater than 2%	0.0	1.0	111	35
4207	41176	7/31/2015	Sandt DOT	Henniker	Maple Street	West	Unknown		Asphalt	Fair	Yes	None	N/A	No		0.0	Grass Strip	None	36 inches to 60 inches	Greater than 80 inches	0.25 inches to 0.50 inches	Yes	16.0	Greater than 2%	0.0	1.0	111	35
4465	41428	9/1/2015	Sandt DOT	Boscawen	N Main	West	Unknown		Asphalt	Fair	Yes	Granite	Good	No		1.0	Grass Strip	None	36 inches to 60 inches	Greater than 80 inches	0.25 inches to 0.50 inches	Yes	9.0	Greater than 2%	2.0	1.0	111	35
4725	41698	10/5/2015	Sandt DOT	Rollinsford	Main Street	South	Unknown		Asphalt	Fair	Yes	Granite	Fair	No		2.0	None	None	36 inches to 60 inches	Greater than 80 inches	0.25 inches to 0.50 inches	Yes	12.0	Greater than 2%	5.0	1.0	111	35
5155	0	11/18/2015	Sandt DOT	Wolfeboro	N Main	South	Unknown		Asphalt	Fair	Yes	None	N/A	No		0.0	None	None	36 inches to 60 inches	Greater than 80 inches	0.25 inches to 0.50 inches	Yes	17.0	Greater than 2%	0.0	1.0	111	35
6563	0	12/15/2015	Sandt DOT	Tilton	School Street	East	Unknown		Asphalt	Fair	Yes	None	N/A	No		0.0	Grass Strip	None	36 inches to 60 inches	Greater than 80 inches	0.25 inches to 0.50 inches	Yes	18.0	Greater than 2%	0.0	1.0	111	35
6653	0	12/17/2015	Sandt DOT	Tilton	Rt 132	South-East	Unknown	12/17/2015	Asphalt	Fair	Yes	Granite	Good	No		5.0	Grass Strip	None	36 inches to 60 inches	Greater than 80 inches	0.25 inches to 0.50 inches	Yes	10.0	Greater than 2%	0.0	1.0	111	35
4938	42752	10/27/2015	Sandt DOT	Hampton	High Street	North	Unknown		Asphalt	Poor	Yes	Granite	Fair	No		4.0	None	Utility Pole	Greater than 80 inches	Unlimited	Greater than 0.50 inches	Yes	2.0	Less than or equal to 2%	0.0	1.0	110	35
637	2136	7/2/2015	Sandt DOT	Manchester	Hanover Street	North	Unknown		Asphalt	Poor	Yes	Granite	Good	No		5.0	None	Utility Pole	36 inches to 60 inches	Unlimited	Greater than 0.50 inches	No	5.0	Greater than 2%	2.0	1.0	110	35
4259	41229	8/10/2015	Sandt DOT	Hillsborough	W Main Street	Southeast	Unknown		Asphalt	Poor	Yes	None	N/A	No		0.0	None	None	36 inches to 60 inches	Unlimited	Greater than 0.50 inches	Yes	6.0	Greater than 2%	0.0	1.0	110	35
4678	41651	10/1/2015	Sandt DOT	Rochester	202	North	Unknown		Asphalt	Poor	Yes	None	N/A	No		0.0	Grass Strip	None	36 inches to 60 inches	Unlimited	Greater than 0.50 inches	Yes	6.0	Greater than 2%	0.0	1.0	110	35
5197	0	11/20/2015	Sandt DOT	Wakefield	Rt 109	South-East	Unknown		Asphalt	Poor	Yes	None	N/A	No		0.0	None	None	36 inches to 60 inches	Unlimited	Greater than 0.50 inches	Yes	7.0	Greater than 2%	0.0	1.0	110	35
5198	0	11/20/2015	Sandt DOT	Wakefield	Rt 109	South-East	Unknown		Asphalt	Poor	Yes	None	N/A	No		0.0	None	None	36 inches to 60 inches	Unlimited	Greater than 0.50 inches	Yes	3.0	Greater than 2%	0.0	1.0	110	35
5205	0	11/20/2015	Sandt DOT	Wolfeboro	Rt 109	North	Unknown		Asphalt	Poor	Yes	None	N/A	No		0.0	Grass Strip	None	36 inches to 60 inches	Unlimited	Greater than 0.50 inches	Yes	7.0	Greater than 2%	0.0	1.0	110	35
5206	0	11/20/2015	Sandt DOT	Wolfeboro	Rt 109	North	Unknown		Asphalt	Poor	Yes	None	N/A	No		0.0	Grass Strip	None	36 inches to 60 inches	Unlimited	Greater than 0.50 inches	Yes	10.0	Less than or equal to 2%	0.0	1.0	110	35
5215	0	11/23/2015	Sandt DOT	Wolfeboro	Rt 109	North-West	Unknown		Asphalt	Poor	Yes	Granite	Fair	No		1.0	None	None	36 inches to 60 inches	Unlimited	Greater than 0.50 inches	Yes	4.0	Greater than 2%	8.0	1.0	110	35
6157	0	11/25/2015	Sandt DOT	Alton	Mount Major Hwy	North-West	Unknown		Asphalt	Poor	Yes	Granite	Good	No		3.0	None	None	36 inches to 60 inches	Unlimited	Greater than 0.50 inches	Yes	6.0	Greater than 2%	1.0	1.0	110	35
6667	0	12/18/2015	Sandt DOT	Meredith	Rt 25	North-West	Unknown		Asphalt	Poor	Yes	Granite	Good	No		3.0	None	None	36 inches to 60 inches	Unlimited	Greater than 0.50 inches	Yes	1.0	Greater than 2%	8.0	1.0	110	35
6672	0	12/18/2015	Sandt DOT	Meredith	Rt 25	East	Unknown		Asphalt	Poor	Yes	Granite	Good	No		3.0	Grass Strip	None	36 inches to 60 inches	Unlimited	Greater than 0.50 inches	Yes	1.0	Greater than 2%	2.0	1.0	110	35
891	3259	7/24/2015	Sandt DOT	Auburn	Manchester Road	North	Unknown		Asphalt	Fair	Yes	Granite	Good	No		3.0	None	Utility Pole	less than 36 inches	Less than 80in	0.25 inches to 0.50 inches	No	1.0	Greater than 2%	1.0	1.0	110	35
4229	41198	8/6/2015	Sandt DOT	Boscawen	B Main Street	East	Unknown		Asphalt	Fair	Yes	None	N/A	No		0.0	Grass Strip	None	36 inches to 60 inches	Less than 80in	0.25 inches to 0.50 inches	Yes	11.0	Less than or equal to 2%	0.0	1.0	110	35
4703	41676	10/2/2015	Sandt DOT	Rochester	N Main St	South	Unknown		Asphalt	Poor	Yes	Granite	Good	No		6.0	Parking Spaces	Utility Pole	36 inches to 60 inches	Greater than 80 inches	0.25 inches to 0.50 inches	Yes	2.0	Greater than 2%	4.0	1.0	110	35
869	3237	7/23/2015	Sandt DOT	Derry	S Main St.	Northeast	Unknown		Asphalt	Good	Yes	None	N/A	No		0.0	Grass Strip	Vegetation	36 inches to 60 inches	Greater than 80 inches	Greater than 0.50 inches	No	9.0	Greater than 2%	0.0	1.0	109	36
5006	42901	10/27/2015	Wilkinson	Colebrook	Rte. 3	West	Unknown		Asphalt	Poor	Yes	Granite	Fair	No		2.0	Parking Spaces	Vegetation	36 inches to 60 inches	Greater than 80 inches	Greater than 0.50 inches	No	8.0	Greater than 2%	10.0	1.0	109	36
5187	0	11/5/2015	Sandt DOT	Hampton Falls	B4	North	Unknown		Asphalt	Poor	Yes	Granite	Good	No		3.0	None	Vegetation	36 inches to 60 inches	Greater than 80 inches	Greater than 0.50 inches	No	1.0	Greater than 2%	0.0	1.0	109	36
6337	0	12/7/2015	Wilkinson District 1	Whitefield	Rte. 3	South	Unknown		Asphalt	Poor	Yes	None	Good	No		0.0	Grass Strip	Vegetation	36 inches to 60 inches	Greater than 80 inches	Greater than 0.50 inches	No	5.0	Greater than 2%	0.0	1.0	109	36
6623	0	12/17/2015	Wilkinson District 1	Pike	Rte. 25	North-West	Unknown		Asphalt	Poor	Yes	Granite	Fair	No		2.0	Bicycle Lane	Vegetation	36 inches to 60 inches	Greater than 80 inches	Greater than 0.50 inches	No	2.0	Greater than 2%	1.0	1.0	109	36
797	2296	7/17/2015	Sandt DOT	Pittsfield	Main Street	Southwest	Unknown		Asphalt	Fair	Yes	Granite	Fair	No		1.0	Parking Spaces	None	36 inches to 60 inches	Unlimited	0.25 inches to 0.50 inches	Yes	27.0	Greater than 2%	28.0	1.0	108	36
4314	41286	8/14/2015	Sandt DOT	Wilton	Dale Street	East	Unknown		Asphalt	Fair	Yes	Granite	Good	No		10.0	None	None	36 inches to 60 inches	Unlimited	0.25 inches to 0.50 inches	Yes	12.0	Greater than 2%	2.0	1.0	108	36
4441	41413	8/31/2015	Sandt DOT	Hinsdale	Brattleboro Road	North	Unknown		Asphalt	Fair	Yes	None	N/A	No		0.0	None	None	36 inches to 60 inches	Unlimited	0.25 inches to 0.50 inches	Yes	10.0	Greater than 2%	0.0	1.0	108	36
510	1074	6/22/2015	Sandt DOT	Hooksett	N River	West	Unknown		Asphalt	Fair	Yes	Granite	Good	No		4.0	Grass Strip	Vegetation	less than 36 inches	Less than 80in	Greater than 0.50 inches	No	1.0	Less than or equal to 2%	4.0	1.0	108	36
543	2042	6/25/2015	Sandt DOT	Manchester	Mammoth	East	Unknown		Asphalt	Fair	Yes	Granite	Good	No		5.0	Grass Strip	Vegetation	less than 36 inches	Less than 80in	Greater than 0.50 inches	No	3.0	Less than or equal to 2%	0.0	1.0	108	36
828	3196	7/22/2015	Sandt DOT	Derry	W Broadway	Southeast	Unknown		Asphalt	Fair	Yes	Granite	Good	No		2.0	None	Utility Pole	36 inches to 60 inches	Greater than 80 inches	Greater than 0.50 inches	Yes	6.0	Less than or equal to 2%	6.0	1.0	108	36
5133	0	11/16/2015	Wilkinson District 1	North Stratford	Rte. 3	East	Unknown		Asphalt	Poor	Yes	Granite	Fair	No		2.0	Bicycle Lane	None	less than 36 inches	Greater than 80 inches	Greater than 0.50 inches	No	5.0	Greater than 2%	2.0	1.0	108	36
6275	0	12/4/2015	Sandt DOT	Plymouth	Rt 3	East	Unknown		Asphalt	Good	Yes	Asphalt	Fair	No		3.0	Parking Spaces	Utility Pole	36 inches to 60 inches	Greater than 80 inches	Greater than 0.50 inches	Yes	3.0	Greater than 2%	1.0	1.0	108	36
6377	0	12/8/2015	Melendy District 1	Whitefield	Rte. 3	West	Unknown		Asphalt	Poor	Yes	None	N/A	No		0.0	Other	None	36 inches to 60 inches	Greater than 80 inches	Greater than 0.50 inches	No	10.0	Less than or equal to 2%	0.0	1.0	108	36
6378	0	12/8/2015	Melendy District 1	Whitefield	Rte. 3	West	Unknown		Asphalt	Poor	Yes	None	N/A	No		0.0	Grass Strip	None	36 inches to 60 inches	Greater than 80 inches	Greater than 0.50 inches	No	14.0	Less than or equal to 2%	0.0	1.0	108	36
6844	0	1/11/2016	Wilkinson District 1	Lincoln	Rte 112	North-West	Unknown		Asphalt	Poor	Yes	None	N/A	No		0.0	Grass Strip	None	36 inches to 60 inches	Greater than 80 inches	Greater than 0.50 inches	No	20.0	Less than or equal to 2%	0.0	1.0	108	36
7954	0	1/29/2016	Sandt DOT	Fremont	Rt 25	North	Unknown		Asphalt	Good	Yes	None	Good	No		0.0	Grass Strip	Vegetation	less than 36 inches	Less than 80in	Less than 0.25 inches	Yes	12.0	Greater than 2%	0.0	1.0	108	36
4985	42800	11/2/2015	Melendy district one	Colebrook	Rte26	North	Unknown		Asphalt	Poor	Yes	None	N/A	No		0.0	Grass Strip	Vegetation	36 inches to 60 inches	Less than 80in	Greater than 0.50 inches	No	2.0	Less than or equal to 2%	3.0	1.0	108	36
4225	41194	8/4/2015	Sandt DOT	Hopkinton	Maple	East	Unknown		Asphalt	Fair	Yes	None	Good	No		4.0	Grass Strip	Vegetation	less than 36 inches	Greater than 80 inches	0.25 inches to 0.50 inches	Yes	7.0	Less than or equal to 2%	0.0	1.0	107	37
4307	41278	8/13/2015	Sandt DOT	Wilton	Main Street	North	Unknown		Asphalt	Fair	Yes	Granite	Good	No		5.0	None	Vegetation	less than 36 inches	Greater than 80 inches	0.25 inches to 0.50 inches	Yes	4.0	Less than or equal to 2%	3.0	1.0	107	37
4701	41674	10/2/2015	Sandt DOT	Rochester	N Main St	Northeast	Unknown		Asphalt	Fair	Yes	Asphalt	Fair	No		1.0	Grass Strip	None	36 inches to 60 inches	Greater than 80 inches	Greater than 0.50 inches	Yes	1.0	Less than or equal to 2%	0.0	1.0	107	37
5055	42950	11/2/2015	Sandt DOT	Hampton	Ocean Blvd	West	Unknown		Asphalt	Poor	Yes	Granite	Good	No		0.0	None	None	36 inches to 60 inches	Greater than 80 inches	Greater than 0.50 inches	Yes	1.0	Less than or equal to 2%	0.0	1.0	107	37
5056	42951	11/2/2015	Sandt DOT	Hampton	Ocean Blvd	West	Unknown		Asphalt	Poor	Yes	None	N/A	No		0.0	None	None	36 inches to 60 inches	Greater than 80 inches	Greater than 0.50 inches	Yes	1.0	Less than or equal to 2%	0.0	1.0	107	37
6261	0	12/4/2015	Sandt DOT	Plymouth	Highland Street	South	Unknown		Asphalt	Fair	Yes	Granite	Good	No		3.0	Parking Spaces	None	36 inches to 60 inches	Greater than 80 inches	Less than 0.25 inches	Yes	13.0	Greater than 2%	1.0	1.0	107	37
6321	0	12/7/2015	Nichols district 1	Groveton	Rte 3	East	Unknown		Asphalt	Poor	Yes	None	N/A	No		0.0	Parking Spaces	Utility Pole	36 inches to 60 inches	Greater than 80 inches	Greater than 0.50 inches	No	1.0	Less than or equal to 2%	0.0	1.0	107	37
6389	0	12/9/2015	Sandt DOT	Mont Vernon	Rt 13	South	Unknown		Asphalt	Fair	Yes	Granite	Good	No		2.0	None	None	36 inches to 60 inches	Greater than 80 inches	Less than 0.25 inches	Yes	10.0	Greater than 2%	5.0	1.0	107	37
6392	0	12/9/2015	Sandt DOT	Mont Vernon	Rt 13	East	Unknown		Asphalt	Fair	Yes	Granite	Good	No		3.0	None	None	36 inches to 60 inches	Greater than 80 inches	Less than 0.25 inches	Yes	9.0	Greater than 2%	2.0	1.0	107	37
6725	0	12/24/2015	Sandt DOT	New London	Rt 114	North-East	Unknown		Asphalt	Poor	Yes	None	Good	No		0.0	Grass Strip	None	36 inches to 60 inches	Greater than 80 inches	Greater than 0.50 inches	Yes	2.0	Less than or equal to 2%	0.0	1.0	107	37
10138	0	3/30/2016	Sandt DOT	Plaistow	Main Street	West	Unknown		Asphalt	Poor	Yes	Asphalt	Fair	No		2.00000000000	Grass Strip	Moveable Objects	36 inches to 60 inches	Greater than 80 inches	Greater than 0.50 inches	Yes	4.0	Less than or equal to 2%	6.0	1.0	107	37
5028	42923	11/2/2015	Nichols district 1	Colebrook	Rte 26	South	Unknown		Asphalt	Fair	Yes	Granite	Fair	No		4.0	Parking Spaces	Utility Pole	36 inches to 60 inches	Less than 80in	Greater than 0.50 inches	Yes	0.3	Greater than 2%	6.0	1.0	107	37
4981	42796	11/2/2015	Melendy district one	Colebrook	Rte 26	North	Unknown		Asphalt	Poor	Yes	Granite	Fair	No		0.0	Parking Spaces	Vegetation	36 inches to 60 inches	Unlimited	Greater than 0.50 inches	No	3.0	Greater than 2%	2.0	1.0	106	38
5188	0	11/5/2015	Sandt DOT	Hampton Falls	Rt 88	North	Unknown		Asphalt	Poor	Yes	Granite	Good	No		4.0	None	Vegetation	36 inches to 60 inches	Unlimited	Greater than 0.50 inches	No	5.0	Greater than 2%	0.0	1.0	106	38
5189	0	11/5/2015	Sandt DOT	Hampton Falls	Rt 88	North	Unknown		Asphalt	Poor	Yes	Granite	Good	No		4.0	None	Vegetation	36 inches to 60 inches	Unlimited	Greater than 0.50 inches	No	5.0	Greater than 2%	0.0	1.0	106	38
5192	0	11/5/2015	Sandt DOT	Hampton Falls	Rt 88	South	Unknown		Asphalt	Poor	Yes	Granite	Good	No		4.0	None	Vegetation	36 inches to 60 inches	Unlimited	Greater than 0.50 inches	No	5.0	Greater than 2%	0.0	1.0	106	38
5193	0	11/5/2015	Sandt DOT	Hampton Falls	Rt 88	South	Unknown		Asphalt	Poor	Yes	Granite	Good	No		4.0	None	Vegetation	36 inches to 60 inches	Unlimited	Greater than 0.50 inches	No	5.0	Greater than 2%	0.0	1.0	106	38
701	2200	7/10/2015	Sandt DOT	Nashua			Unknown		Asphalt	Good	Yes	None	N/A	No		0.0	None	Vegetation	less than 36 inches	Less than 80in	0.25 inches to 0.50 inches	Yes	7.5	Less than or equal to 2%	0.0	1.0	106	38
792	2291	7/17/2015	Sandt DOT	Pittsfield	Main Street	Northeast	Unknown		Asphalt	Fair	Yes	Granite	Fair	No		3.0	Parking Spaces	Utility Pole	36 inches to 60 inches	Greater than 80 inches	0.25 inches to 0.50 inches	Yes	3.0	Greater than 2%	3.0	1.0	106	38
793	2292	7/17/2015	Sandt DOT	Pittsfield	Main Street	Northeast	Unknown		Asphalt	Fair	Yes	Granite	Fair	No		6.0	Parking Spaces	Utility Pole	36 inches to 60 inches	Greater than 80 inches	0.25 inches to 0.50 inches	Yes	4.0	Greater than 2%	1.0	1.0	106	38
794	2293	7/17/2015	Sandt DOT	Pittsfield	Main Street	North	Unknown		Asphalt	Fair	Yes	Granite	Fair	No		2.0	Parking Spaces	Utility Pole	36 inches to 60 inches	Greater than 80 inches	0.25 inches to 0.50 inches	Yes	8.0	Greater than 2%	4.0	1.0	106	38
831	3199	7/22/2015	Sandt DOT	Derry	W Broadway	Southeast	Unknown		Asphalt	Fair	Yes	Granite	Fair	No		2.0	Grass Strip	Utility Pole	36 inches to 60 inches	Greater than 80 inches	0.25 inches to 0.50 inches	Yes	4.0	Greater than 2%	11.0	1.0	106	38
890	3258	7/24/2015	Sandt DOT	Auburn	Manchester Road	North	Unknown		Asphalt	Fair	Yes	Granite	Good	No		3.0	None	Vegetation	less than 36 inches	Less than 80in	0.25 inches to 0.50 inches	No	1.0	Greater than 2%	1.0	1.0	106	38
892	3260	7/24/2015	Sandt DOT	Auburn	Manchester Road	North	Unknown		Asphalt	Fair	Yes	Asphalt	Good	No		3.0	None	Utility Pole	less than 36 inches	Less than 80in	Less than 0.25 inches	No	3.0	Greater than 2%	1.0	1.0	106	38
4134	41203	8/7/2015	Sandt DOT	Goffstown	Main Street	West	Unknown		Asphalt	Fair	Yes	Granite	Fair	No		3.0	None	Utility Pole	36 inches to 60 inches	Greater than 80 inches	0.25 inches to 0.50 inches	Yes	2.0	Greater than 2%	3.0	1.0	106	38
4580	41553	9/21/2015	Sandt DOT	Lebanon	Lebanon Rest Area		Unknown		Asphalt	Poor	Yes	None	N/A	No		0.0	None	None	36 inches to 60 inches	Less than 80in	Less than 0.25 inches	Yes	2.0	Greater than 2%	0.0	1.0	106	38
10133	0	3/30/2016	Sandt DOT	Plaistow	Main Street	West	Unknown		Asphalt	Poor	Yes	None	N/A	No		0.00000000000	Grass Strip	None	less than 36 inches	Greater than 80 inches	0.25 inches to 0.50 inches	Yes	4.0	Less than or equal to 2%	0.0	1.0	106	38
829	3197	7/22/2015	Sandt DOT	Derry	W Broadway	Southeast	Unknown		Asphalt	Good	Yes	Granite	Good	No		2.0	None	Utility Pole	36 inches to 60 inches	Unlimited	Greater than 0.50 inches	Yes	3.0	Greater than 2%	3.0	1.0	105	38
4262	41232	8/10/2015	Sandt DOT	Hillsborough	W Main Street	Northwest	Unknown		Asphalt	Good	Yes	Granite	Good	No		2.0	None	Utility Pole	36 inches to 60 inches	Unlimited	Greater than 0.50 inches	Yes	2.0	Greater than 2%	0.0	1.0	105	38
521	1086	6/23/2015	MC SWRPC	North Walpole	Vine Street	Southeast	Unknown		Concrete	Fair	Yes	None	N/A	No		3.0	None	None	less than 36 inches	Less than 80in	Less than 0.25 inches	No	9.3	Less than or equal to 2%	5.0	1.0	105	38
4326	41298	8/14/2015	Sandt DOT	Hillsborough	Bridge Street	Northeast	Unknown		Asphalt	Fair	Yes	None	N/A	No		0.0	Grass Strip	Moveable Objects	less than 36 inches	Greater than 80 inches	0.25 inches to 0.50 inches	Yes	5.0	Greater than 2%	5.0	1.0	105	38
4423	41395	8/28/2015	Sandt DOT	Troy	South Main	Southwest	Unknown		Concrete	Fair	Yes	Granite	Good	No		2.0	Grass Strip	Vegetation	36 inches to 60 inches	Less than 80in	0.25 inches to 0.50 inches	Yes	3.0	Less than or equal to 2%	0.0	1.0	105	38
4224	41193	8/4/2015	Sandt DOT	Hopkinton	Maple	East	Unknown		Asphalt	Fair	Yes	None	N/A	No		0.0	Grass Strip	Vegetation	less than 36 inches	Unlimited	0.25 inches to 0.50 inches	Yes	7.0	Less than or equal to 2%	0.0	1.0	104	39
4494	41467	9/4/2015	Sandt DOT	Marlborough	Terrace St	North	Unknown		Concrete	Poor	Yes	Granite	Poor	No		0.0	None	None	36 inches to 60 inches	Unlimited	Greater than 0.50 inches	Yes	1.0	Less than or equal to 2%	2.0	1.0	104	39
4720	41693	10/5/2015	Sandt DOT	Rollinsford	Main Street	North	Unknown		Asphalt	Fair	Yes	Asphalt	Fair	No		4.0	None	Utility Pole	less than 36 inches	Unlimited	Less than 0.25 inches	Yes	1.0	Less than or equal to 2%	0.0	1.0	104	39
4897	42710	10/26/2015	Sandt DOT	Rye	Ocean Blvd	East	Unknown		Concrete	Poor	Yes	None	N/A	No		0.0	Grass Strip	None	36 inches to 60 inches	Unlimited	Greater than 0.50 inches	Yes	2.0	Less than or equal to 2%	0.0	1.0	104	39
5070	42965	11/2/2015	Sandt DOT	Hampton	Ocean Blvd	West	Unknown		Concrete	Poor	Yes	Granite	Fair	No		0.0	Parking Spaces	None	36 inches to 60 inches	Unlimited	Greater than 0.50 inches	Yes	1.0	Less than or equal to 2%	1.0	1.0	104	39
5305	42900	10/27/2015	Nichols district 1	Colebrook	Rte 3	East	Unknown		Asphalt	Fair	Yes	Granite	Fair	No		1.0	Parking Spaces	Drain	36 inches to 60 inches	Greater than 80 inches	Greater than 0.50 inches	Yes	7.9	Less than or equal to 2%	4.0	1.0	104	39
4948	42762	10/27/2015	Sandt DOT	Hampton	Ocean Blvd	North	Unknown		Asphalt	Fair	Yes	Asphalt	Fair	No		0.0	None	Utility Pole	36 inches to 60 inches	Unlimited	0.25 inches to 0.50 inches	Yes	1.0	Greater than 2%	9.0	1.0	103	39
6343	0	12/7/2015	Wilkinson District 1	Whitefield	Rte. 3	East	Unknown		Asphalt	Poor	Yes	Granite	Poor	No		2.0	Parking Spaces	Utility Pole	Greater than 60 inches	Greater than 80 inches	Greater than 0.50 inches	No	3.0	Greater than 2%	2.0	1.0	103	39
6437	0	12/10/2015	Wilkinson District 1	Bethlehem	Rte. 302	South	Unknown		Asphalt	Poor	Yes	None	Good	No		0.0	Parking Spaces	Utility Pole	Greater than 60 inches	Greater than 80 inches	Greater than 0.50 inches	No	1.0	Greater than 2%	0.0	1.0	103	39
559	2058	6/26/2015	Sandt DOT	Manchester	Amoskeag	East	Unknown		Concrete	Fair	Yes	None	N/A	No		0.0	Grass Strip	Vegetation	less than 36 inches	Greater than 80 inches	Greater than 0.50 inches	No	2.0	Less than or equal to 2%	0.0	1.0	103	39
6191	42649	11/30/2015	Sandt DOT	Concord	South Street	West	Unknown		Asphalt	Poor	Yes	Granite	Good	No		6.0	Grass Strip	None	36 inches to 60 inches	Greater than 80 inches	Greater than 0.50 inches	Yes	2.0	Less than or equal to 2%	4.0	1.0	103	39
6241	0	12/3/2015	Sandt DOT	Campton	Livermore Rd	South-West	Unknown		Asphalt	Poor	Yes	None	N/A	No		0.0	None	None	36 inches to 60 inches	Greater than 80 inches	Greater than 0.50 inches	Yes	3.0	Less than or equal to 2%	0.0	1.0	103	39
6296	0	12/4/2015	Sandt DOT	Ashland	Rt 132	East	Unknown		Asphalt	Poor	Yes	None	N/A	No		0.0	Grass Strip	Vegetation	36 inches to 60 inches	Greater than 80 inches	Less than 0.25 inches	Yes	1.0	Less than or equal to 2%	0.0	1.0	103	39
6328	0	12/7/2015	Sandt DOT	New Hampton	132	North	Unknown		Asphalt	Poor	Yes	Asphalt	Poor	No		0.0	Grass Strip	None	36 inches to 60 inches	Greater than 80 inches	Greater than 0.50 inches	Yes	3.0	Less than or equal to 2%	2.0	1.0	103	39
6372	0	12/8/2015	Melendy District 1	Whitefield	Rte. 3	East	Unknown		Asphalt	Fair	Yes	None	N/A	No		0.0	Grass Strip	None	36 inches to 60 inches	Greater than 80 inches	Greater than 0.50 inches	No	14.0	Greater than 2%	0.0	1.0	103	39
6386	0	12/8/2015	Melendy District 1	Whitefield	Rte. 142	South-West	Unknown		Asphalt	Poor	Yes	None	N/A	Yes		0.0	Other	Fixed Object	36 inches to 60 inches	Greater than 80 inches	Greater than 0.50 inches	No	4.0	Less than or equal to 2%	0.0	1.0	103	39
6495	0	12/14/2015	Sandt DOT	Bristol	3A	East	Unknown		Asphalt	Poor	Yes	Granite

6525	0	12/15/2015	Wilkinson District 1	Littleton	Rte. 116	South-East	Unknown	Asphalt	Fair	Yes	Granite	Fair	No	3.0 None	Fixed Object	36 inches to 60 inches	Greater than 80 inches	Greater than 0.50 inches	No	6.0 Greater than 2%	8.0	1.0	98	42
6526	0	12/15/2015	Wilkinson District 1	Littleton	Rte. 116	South-East	Unknown	Asphalt	Fair	Yes	Granite	Fair	No	3.0 None	Utility Pole	36 inches to 60 inches	Greater than 80 inches	Greater than 0.50 inches	No	4.0 Greater than 2%	5.0	1.0	98	42
6527	0	12/15/2015	Wilkinson District 1	Littleton	Rte. 116	South	Unknown	Asphalt	Fair	Yes	Granite	Fair	No	2.0 None	Utility Pole	36 inches to 60 inches	Greater than 80 inches	Greater than 0.50 inches	No	7.0 Greater than 2%	4.0	1.0	98	42
6529	0	12/15/2015	Wilkinson District 1	Littleton	Rte. 116	South	Unknown	Asphalt	Fair	Yes	Granite	Fair	No	3.0 Bicycle Lane	Utility Pole	36 inches to 60 inches	Greater than 80 inches	Greater than 0.50 inches	No	3.0 Greater than 2%	8.0	1.0	98	42
6542	0	12/15/2015	Nichols district 1	Littleton	Rte 302	South	Unknown	Asphalt	Fair	Yes	None	N/A	No	0.0 Parking Spaces	Fixed Object	36 inches to 60 inches	Greater than 80 inches	Greater than 0.50 inches	No	2.0 Greater than 2%	0.0	1.0	98	42
6583	0	12/16/2015	Wilkinson District 1	Littleton	Cottage Street-Rtes. 302,18,116	West	Unknown	Asphalt	Fair	Yes	Granite	Fair	No	3.0 Bicycle Lane	Utility Pole	36 inches to 60 inches	Greater than 80 inches	Greater than 0.50 inches	No	4.0 Greater than 2%	4.0	1.0	98	42
6765	0	1/4/2016	Sandt DOT	Laconia	Court Street	North	Unknown	Asphalt	Fair	Yes	None	Good	No	0.0 Grass Strip	None	36 inches to 60 inches	Greater than 80 inches	Greater than 0.50 inches	Yes	6.0 Greater than 2%	0.0	1.0	98	42
6846	0	1/11/2016	Wilkinson District 1	Lincoln	Rte 112	North-West	Unknown	Asphalt	Fair	Yes	Granite	Fair	No	5.0 Bicycle Lane	None	36 inches to 60 inches	Greater than 80 inches	Greater than 0.50 inches	Yes	4.0 Greater than 2%	3.0	1.0	98	42
7872	0	1/15/2016	Sandt DOT	Durham	Rt 108	East	Unknown	Asphalt	Fair	Yes	Asphalt	Poor	No	0.0 None	None	36 inches to 60 inches	Greater than 80 inches	Greater than 0.50 inches	Yes	4.0 Greater than 2%	1.0	1.0	98	42
7929	0	1/28/2016	Wilkinson District 1	Franconia	Wallace Hill road	East	Unknown	Asphalt	Fair	Yes	Granite	Good	No	6.0 Bicycle Lane	Fixed Object	36 inches to 60 inches	Greater than 80 inches	Greater than 0.50 inches	No	3.0 Greater than 2%	1.0	1.0	98	42
7930	0	1/28/2016	Wilkinson District 1	Franconia	Wallace Hill road	East	Unknown	Asphalt	Fair	Yes	Granite	Good	No	2.0 Bicycle Lane	Fixed Object	36 inches to 60 inches	Greater than 80 inches	Greater than 0.50 inches	No	2.0 Greater than 2%	3.0	1.0	98	42
9096	0	3/17/2016	Wilkinson District 1	Woodstock	Rte. 3	West	Unknown	Asphalt	Fair	Yes	Granite	Fair	No	3.000000000000 None	None	36 inches to 60 inches	Greater than 80 inches	Greater than 0.50 inches	Yes	1.0 Greater than 2%	2.0	1.0	98	42
9100	0	3/17/2016	Wilkinson District 1	Woodstock	Rte. 3	West	Unknown	Asphalt	Fair	Yes	Granite	Fair	No	1.000000000000 Parking Spaces	Fixed Object	36 inches to 60 inches	Greater than 80 inches	Greater than 0.50 inches	No	5.0 Greater than 2%	3.0	1.0	98	42
5051	42946	10/29/2015	Sandt DOT	Hampton	Ocean Blvd	W	Unknown	Concrete	Fair	Yes	None	N/A	No	0.0 Parking Spaces	Utility Pole	Greater than 60 inches	Unlimited	0.25 inches to 0.50 inches	Yes	1.0 Greater than 2%	4.0	1.0	97	43
6457	0	12/10/2015	Sandt DOT	Laconia	Rt 3	North	Unknown	Concrete	Poor	Yes	Concrete	Good	No	5.0 None	None	Greater than 60 inches	Greater than 80 inches	Greater than 0.50 inches	Yes	5.0 Less than or equal to 2%	0.0	1.0	97	43
4719	41692	10/5/2015	Sandt DOT	Rollinsford	Main Street	South	Unknown	Asphalt	Fair	Yes	None	N/A	No	0.0 Grass Strip	None	less than 36 inches	less than 36 inches	Less than 0.25 inches	Yes	7.0 Greater than 2%	0.0	1.0	97	43
6154	0	11/25/2015	Sandt DOT	Alton	Mount Major Hwy	North	Unknown	Asphalt	Poor	Yes	Concrete	Good	No	1.0 Parking Spaces	None	36 inches to 60 inches	Greater than 80 inches	Less than 0.25 inches	Yes	3.0 Greater than 2%	0.0	1.0	97	43
6297	0	12/4/2015	Sandt DOT	Ashland	Rt 132	East	Unknown	Asphalt	Fair	Yes	None	N/A	No	0.0 Grass Strip	None	36 inches to 60 inches	Greater than 80 inches	Less than 0.25 inches	Yes	10.0 Less than or equal to 2%	0.0	1.0	97	43
6320	0	12/7/2015	Nichols district 1	Groveton	Rte 3	East	Unknown	Concrete	Poor	Yes	None	N/A	No	0.0 Parking Spaces	None	36 inches to 60 inches	Greater than 80 inches	Greater than 0.50 inches	No	0.5 Greater than 2%	6.0	1.0	97	43
6356	0	12/8/2015	Nichols district 1	Lancaster	Rte 2 and Rte 3	East	Unknown	Concrete	Poor	Yes	Granite	Poor	No	3.0 None	None	36 inches to 60 inches	Greater than 80 inches	Greater than 0.50 inches	No	1.0 Greater than 2%	1.0	1.0	97	43
7871	0	1/15/2016	Sandt DOT	Durham	Rt 108	East	Unknown	Asphalt	Fair	Yes	Granite	Good	No	4.0 Grass Strip	None	36 inches to 60 inches	Greater than 80 inches	Less than 0.25 inches	Yes	10.0 Less than or equal to 2%	0.0	1.0	97	43
7944	0	1/28/2016	Wilkinson District 1	Franconia	Rte. 116	East	Unknown	Concrete	Poor	Yes	Concrete	Fair	No	6.0 None	None	36 inches to 60 inches	Greater than 80 inches	Greater than 0.50 inches	No	1.0 Greater than 2%	1.0	1.0	97	43
475	1039	6/12/2015	Sandt DOT	Pembroke	Pembroke Road	Northeast	Unknown	Asphalt	Fair	Yes	Granite	Fair	No	4.0 None	Moveable Objects	less than 36 inches	Less than 80in	Greater than 0.50 inches	No	0.0 Less than or equal to 2%	27.0	1.0	96	44
834	1202	7/22/2015	Sandt DOT	Derry	W Broadway	Northwest	Unknown	Asphalt	Fair	Yes	Granite	Good	No	2.0 Parking Spaces	Utility Pole	36 inches to 60 inches	Greater than 80 inches	0.25 inches to 0.50 inches	Yes	3.0 Less than or equal to 2%	3.0	1.0	96	44
4227	41196	8/5/2015	Sandt DOT	Boscawen	King Street	Northeast	Unknown	Asphalt	Fair	Yes	Granite	Good	No	6.0 Grass Strip	Utility Pole	36 inches to 60 inches	Greater than 80 inches	0.25 inches to 0.50 inches	Yes	2.0 Less than or equal to 2%	5.0	1.0	96	44
4276	41247	8/10/2015	Sandt DOT	Hillsborough	Center	West	Unknown	Asphalt	Poor	Yes	None	N/A	No	0.0 Grass Strip	None	less than 36 inches	Greater than 80 inches	0.25 inches to 0.50 inches	No	4.0 Greater than 2%	0.0	1.0	96	44
5012	42907	10/27/2015	Wilkinson District 1	Colebrook	Rte. 3	Northwest	Unknown	Asphalt	Poor	Yes	Granite	Fair	No	5.0 None	None	36 inches to 60 inches	Greater than 80 inches	0.25 inches to 0.50 inches	Yes	14.0 Less than or equal to 2%	2.0	1.0	96	44
683	2182	7/9/2015	Sandt DOT	Merrimack	Greeley Street	North	Unknown	Concrete	Good	Yes	Granite	Good	No	2.0 None	Vegetation	36 inches to 60 inches	Unlimited	Greater than 0.50 inches	Yes	5.0 Less than or equal to 2%	1.0	1.0	95	44
699	2198	7/10/2015	Sandt DOT	Nashua	Dunstable Road	Southwest	Unknown	Asphalt	Fair	Yes	Asphalt	Good	No	5.0 None	None	36 inches to 60 inches	Unlimited	Greater than 0.50 inches	Yes	3.0 Greater than 2%	1.0	1.0	95	44
702	2201	7/10/2015	Sandt DOT	Nashua	Dunstable Road	Southwest	Unknown	Asphalt	Fair	Yes	Granite	Good	No	5.0 None	None	36 inches to 60 inches	Unlimited	Greater than 0.50 inches	Yes	3.0 Greater than 2%	3.0	1.0	95	44
4260	41230	8/10/2015	Sandt DOT	Hillsborough	W Main Street	South	Unknown	Asphalt	Fair	Yes	None	N/A	No	0.0 None	None	36 inches to 60 inches	Unlimited	Greater than 0.50 inches	Yes	5.0 Greater than 2%	0.0	1.0	95	44
4579	41552	9/21/2015	Sandt DOT	Lebanon	Lebanon Rest Area	Southeast	Unknown	Asphalt	Fair	Yes	Granite	Good	No	3.0 Parking Spaces	None	36 inches to 60 inches	Unlimited	Greater than 0.50 inches	Yes	1.0 Greater than 2%	1.0	1.0	95	44
4963	42778	10/29/2015	Sandt DOT	Hampton	Ocean Blvd	W	Unknown	Asphalt	Fair	Yes	Asphalt	Poor	No	0.0 None	Utility Pole	36 inches to 60 inches	Unlimited	Level	Yes	1.0 Greater than 2%	1.0	1.0	95	44
5039	42934	10/29/2015	Sandt DOT	Hampton	Ocean Blvd	W	Unknown	Asphalt	Fair	Yes	Asphalt	Poor	No	0.0 None	Utility Pole	36 inches to 60 inches	Unlimited	Level	Yes	1.0 Greater than 2%	1.0	1.0	95	44
4201	34729	7/31/2015	Sandt DOT	Warner	E Main Street	North	Unknown	Asphalt	Fair	Yes	None	Good	No	0.0 Grass Strip	None	36 inches to 60 inches	Less than 80in	0.25 inches to 0.50 inches	Yes	2.0 Greater than 2%	0.0	1.0	95	44
6848	0	1/11/2016	Sandt DOT	Gilmanton	Rt 140	South-West	Unknown	Asphalt	Fair	Yes	None	N/A	No	0.0 Grass Strip	None	36 inches to 60 inches	Less than 80in	0.25 inches to 0.50 inches	Yes	8.0 Greater than 2%	0.0	1.0	95	44
4350	41322	8/18/2015	Sandt DOT	Bennington	Antrim Road	West	Unknown	Concrete	Poor	Yes	Concrete	Poor	No	1.0 None	None	36 inches to 60 inches	Unlimited	Greater than 0.50 inches	Yes	7.0 Greater than 2%	1.0	1.0	94	45
4384	41356	8/20/2015	Sandt DOT	New Ipswich	Turnpike Road	South	Unknown	Asphalt	Good	Yes	Granite	Good	No	5.0 None	None	36 inches to 60 inches	Unlimited	Less than 0.25 inches	Yes	12.0 Greater than 2%	0.0	1.0	94	45
6155	0	11/25/2015	Sandt DOT	Alton	Mount Major Hwy	North	Unknown	Concrete	Poor	Yes	Concrete	Good	No	3.0 None	None	36 inches to 60 inches	Unlimited	Greater than 0.50 inches	No	2.0 Greater than 2%	0.0	1.0	94	45
6156	0	11/25/2015	Sandt DOT	Alton	Mount Major Hwy	North	Unknown	Concrete	Poor	Yes	Concrete	Good	No	3.0 None	None	36 inches to 60 inches	Unlimited	Greater than 0.50 inches	No	2.0 Greater than 2%	0.0	1.0	94	45
6662	0	12/18/2015	Sandt DOT	Meredith	Rt 25	West	Unknown	Asphalt	Good	Yes	Granite	Good	No	4.0 Grass Strip	None	36 inches to 60 inches	Unlimited	Less than 0.25 inches	Yes	12.0 Greater than 2%	0.0	1.0	94	45
4439	41411	8/31/2015	Sandt DOT	Hinsdale	Brattleboro Road	East	Unknown	Asphalt	Fair	Yes	Granite	Good	No	2.0 None	Vegetation	36 inches to 60 inches	Greater than 80 inches	Greater than 0.50 inches	No	2.0 Greater than 2%	2.0	1.0	94	45
6216	0	12/1/2015	Wilkinson District 1	Errol	Rte. 26 and 16	North	Unknown	Asphalt	Fair	Yes	Asphalt	Fair	No	4.0 None	Vegetation	36 inches to 60 inches	Greater than 80 inches	Greater than 0.50 inches	No	3.0 Greater than 2%	3.0	1.0	94	45
6338	0	12/7/2015	Wilkinson District 1	Whitefield	Rte. 3	South	Unknown	Asphalt	Fair	Yes	Asphalt	Poor	No	3.0 Bicycle Lane	Vegetation	36 inches to 60 inches	Greater than 80 inches	Greater than 0.50 inches	No	6.0 Greater than 2%	2.0	1.0	94	45
6620	0	12/17/2015	Nichols district 1	Littleton	Rte 135	North-East	Unknown	Asphalt	Fair	Yes	Granite	Fair	No	5.0 Bicycle Lane	Vegetation	36 inches to 60 inches	Greater than 80 inches	Greater than 0.50 inches	No	6.0 Greater than 2%	2.0	1.0	94	45
6756	0	12/31/2015	Nichols district 1	Woodsville	Rte 302	North	Unknown	Asphalt	Fair	Yes	Granite	Fair	No	5.0 Bicycle Lane	Drain	36 inches to 60 inches	Greater than 80 inches	Greater than 0.50 inches	No	5.0 Greater than 2%	3.0	1.0	94	45
6757	0	12/31/2015	Nichols district 1	Woodsville	Rte 302	North	Unknown	Asphalt	Fair	Yes	Granite	Fair	No	3.0 Bicycle Lane	Drain	36 inches to 60 inches	Greater than 80 inches	Greater than 0.50 inches	No	6.0 Greater than 2%	4.0	1.0	94	45
4939	42753	10/27/2015	Sandt DOT	Hampton	High Street	South	Unknown	Asphalt	Fair	Yes	Granite	Good	No	4.0 None	Utility Pole	Greater than 60 inches	Unlimited	0.25 inches to 0.50 inches	Yes	2.0 Greater than 2%	0.0	1.0	93	45
4940	42754	10/27/2015	Sandt DOT	Hampton	Ocean Blvd	South	Unknown	Asphalt	Fair	Yes	Granite	Good	No	4.0 None	Utility Pole	Greater than 60 inches	Unlimited	0.25 inches to 0.50 inches	Yes	2.0 Greater than 2%	0.0	1.0	93	45
4976	42791	10/29/2015	Sandt DOT	Hampton	Ocean Blvd	W	Unknown	Asphalt	Fair	Yes	None	N/A	No	0.0 Parking Spaces	Utility Pole	Greater than 60 inches	Unlimited	0.25 inches to 0.50 inches	Yes	1.0 Greater than 2%	0.0	1.0	93	45
4977	42792	10/29/2015	Sandt DOT	Hampton	Ocean Blvd	W	Unknown	Asphalt	Fair	Yes	None	N/A	No	0.0 Parking Spaces	Utility Pole	Greater than 60 inches	Unlimited	0.25 inches to 0.50 inches	Yes	1.0 Greater than 2%	0.0	1.0	93	45
5033	42928	10/27/2015	Sandt DOT	Hampton	Ocean Blvd	North	Unknown	Asphalt	Fair	Yes	Asphalt	Fair	No	0.0 None	Utility Pole	Greater than 60 inches	Unlimited	0.25 inches to 0.50 inches	Yes	1.0 Greater than 2%	2.0	1.0	93	45
522	1087	6/23/2015	MC SWRPC	North Walpole	Vine Street	North	Unknown	Concrete	Poor	Yes	None	N/A	No	2.0 None	None	36 inches to 60 inches	Unlimited	Less than 0.25 inches	Yes	9.3 Less than or equal to 2%	2.0	1.0	93	45
4284	41255	8/12/2015	Sandt DOT	Nashua	Amherst Street	North	Unknown	Asphalt	Good	Yes	Granite	Good	No	4.0 None	Utility Pole	36 inches to 60 inches	Unlimited	0.25 inches to 0.50 inches	Yes	2.0 Greater than 2%	4.0	1.0	93	45
4378	41350	8/20/2015	Sandt DOT	Peterborough	Grove Street	Northwest	Unknown	Asphalt	Good	Yes	Granite	Good	No	4.0 None	Utility Pole	36 inches to 60 inches	Unlimited	0.25 inches to 0.50 inches	Yes	1.0 Greater than 2%	5.0	1.0	93	45
4760	41733	10/7/2015	Sandt DOT	Newington	Woodbury Ave	East	Unknown	Concrete	Good	Yes	Granite	Good	No	3.0 None	Fixed Sign	36 inches to 60 inches	Unlimited	Less than 0.25 inches	Yes	1.0 Greater than 2%	0.0	1.0	93	45
563	2062	6/26/2015	Sandt DOT	Manchester	2nd	Northwest	Unknown	Asphalt	Good	Yes	Granite	Fair	No	1.0 None	Utility Pole	less than 36 inches	Greater than 80 inches	Level	Yes	0.0 Less than or equal to 2%	3.0	1.0	93	45
619	2118	6/30/2015	Sandt DOT	Manchester	2nd Street	West	Unknown	Asphalt	Good	Yes	Granite	Good	No	4.0 None	Utility Pole	less than 36 inches	Greater than 80 inches	Greater than 0.50 inches	No	1.0 Less than or equal to 2%	0.0	1.0	93	45
4905	42718	10/26/2015	Wilkinson District 1	Stewartstown	Rte. 3	West	Unknown	Asphalt	Fair	Yes	Granite	Fair	No	5.0 Parking Spaces	Drain	36 inches to 60 inches	Less than 80in	Greater than 0.50 inches	No	5.0 Less than or equal to 2%	5.0	1.0	93	45
5002	42897	10/27/2015	Nichols district 1	Colebrook	Rte3	East	Unknown	Asphalt	Poor	Yes	Granite	Fair	No	3.0 Bicycle Lane	None	36 inches to 60 inches	Greater than 80 inches	Greater than 0.50 inches	No	5.7 Greater than 2%	4.0	1.0	93	45
5023	42918	11/2/2015	Nichols district 1	Colebrook	Rte 26	South	Unknown	Asphalt	Poor	Yes	Granite	Fair	No	3.0 Parking Spaces	None	36 inches to 60 inches	Greater than 80 inches	Greater than 0.50 inches	No	0.7 Greater than 2%	12.0	1.0	93	45
5024	42919	11/2/2015	Nichols district 1	Colebrook	Rte 145	North	Unknown	Asphalt	Poor	Yes	Granite	Fair	No	5.0 None	None	36 inches to 60 inches	Greater than 80 inches	Greater than 0.50 inches	No	1.0 Greater than 2%	0.0	1.0	93	45
5025	42920	11/2/2015	Nichols district 1	Colebrook	Rte 145	North	Unknown	Asphalt	Poor	Yes	None	N/A	No	0.0 None	None	36 inches to 60 inches	Greater than 80 inches	Greater than 0.50 inches	No	5.0 Greater than 2%	0.0	1.0	93	45
5128	0	11/16/2015	Sandt DOT	Tamworth	113	North	Unknown	Asphalt	Poor	Yes	Granite	Poor	No	2.0 None	None	36 inches to 60 inches	Greater than 80 inches	Greater than 0.50 inches	No	2.0 Greater than 2%	1.0	1.0	93	45
5132	0	11/16/2015	Wilkinson District 1	North Stratford	Rte. 3	West	Unknown	Asphalt	Poor	Yes	Granite	Fair	No	1.0 Bicycle Lane	None	36 inches to 60 inches	Greater than 80 inches	Greater than 0.50 inches	No	7.0 Greater than 2%	2.0	1.0	93	45
5169	0	11/19/2015	Wilkinson District 1	Gorham	Rte. 2 and Rte. 16	South	Unknown	Asphalt	Poor	Yes	Granite	Good	No	4.0 Parking Spaces	None	36 inches to 60 inches	Greater than 80 inches	Greater than 0.50 inches	No	4.0 Greater than 2%	2.0	1.0	93	45
5170	0	11/19/2015	Wilkinson District 1	Gorham	Rte. 2 and Rte. 16	South	Unknown	Asphalt	Poor	Yes	Granite	Good	No	4.0 Parking Spaces	None	36 inches to 60 inches	Greater than 80 inches	Greater than 0.50 inches	No	1.0 Greater than 2%	5.0	1.0	93	45
5218	0	11/19/2015	Nichols district 1	Gorham	Rte 2 and rte 16	South	Unknown	Asphalt	Poor	Yes	Granite	Fair	No	6.0 Parking Spaces	None	36 inches to 60 inches	Greater than 80 inches	Greater than 0.50 inches	No	1.0 Greater than 2%	2.0	1.0	93	45
5263	0	11/24/2015	Nichols district 1	Gorham	Rte 2 and Rte 16	South	Unknown	Asphalt	Poor	Yes	Granite	Fair	No	4.0 Parking Spaces	None	36 inches to 60 inches	Greater than 80 inches	Greater than 0.50 inches	No	2.0 Greater than 2%	3.0	1.0	93	45
6188	0	11/30/2015	Nichols district 1	Gorham	Rte 2	South	Unknown	Asphalt	Poor	Yes	None	N/A	No	0.0 Bicycle Lane	None	36 inches to 60 inches	Greater than 80 inches	Greater than 0.50 inches	No	7.5 Greater than 2%	7.0	1.0	93	45
6341	0	12/7/2015	Wilkinson District 1	Whitefield	Rte. 3	North	Unknown	Asphalt	Poor	Yes	Asphalt	Poor	No	0.3 Parking Spaces	None	36 inches to 60 inches	Greater than 80 inches	Greater than 0.50 inches	No	6.0 Greater than 2%	3.0	1.0	93	45
6342	0	12/7/2015	Wilkinson District 1	Whitefield	Rte. 3	East	Unknown	Asphalt	Poor	Yes	Asphalt	Poor	No	6.0 Bicycle Lane	None	36 inches to 60 inches	Greater than 80 inches	Greater than 0.50 inches	No	1.0 Greater than 2%	2.0	1.0	93	45
6355	0	12/8/2015	Nichols district 1	Lancaster	Rte 2 and Rte 3	East	Unknown	Asphalt	Fair	Yes	Granite	Fair	No	5.0 None	None	36 inches to 60 inches	Greater than 80 inches	Greater than 0.50 inches	No	9.0 Less than or equal to 2%	2.0	1.0	93	45
6364	0	12/8/2015	Nichols district 1	Lancaster	Rte 3	East	Unknown	Asphalt	Poor	Yes	Granite	Poor	No	2.0 None	None	36 inches to 60 inches	Greater than 80 inches	Greater than 0.50 inches	No	2.0 Greater than 2%	15.0	1.0	93	45
6371	0	12/8/2015	Melendy District 1	Whitefield	Rte. 3	East	Unknown	Asphalt	Fair	Yes	None	N/A	No	0.0 None	None	36 inches to 60 inches	Greater than 80 inches	Greater than 0.50 inches	No	11.0 Less than or equal to 2%	0.0	1.0	93	45
6375	0	12/8/2015	Melendy District 1	Whitefield	Rte. 3	West	Unknown	Asphalt	Poor	Yes	None	N/A	No	0.0 Other	None	36 inches to 60 inches	Greater than 80 inches	Greater than 0.50 inches	No	3.0 Greater than 2%	0.0	1.0	93	45
6376	0	12/8/2015	Melendy District 1	Whitefield	Rte. 3	West	Unknown	Asphalt	Poor	Yes	Concrete	Poor	No	1.0 Other	None	36 inches to 60 inches	Greater than 80 inches	Greater than 0.50 inches	No	3.0 Greater than 2%	3.0	1.0	93	45
6387	0	12/7/2015	Wilkinson District 1	Whitefield	Rte. 3	West	Unknown	Asphalt	Poor	Yes	None	N/A	No	0.0	None	36 inches to 60 inches	Greater than 80 inches	Greater than 0.50 inches	No	5.0 Greater than 2%	0.0	1.0	93	45
6439	0	12/10/2015	Wilkinson District 1	Bethlehem	Rte. 302	South	Unknown	Asphalt	Poor	Yes	None	Good	No	0.0 Grass Strip	None	36 inches to 60 inches	Greater than 80 inches	Greater than 0.50 inches	No	7.0 Greater than 2%	1.0	1.0	93	45
6511	0	12/14/2015	Patch district 1	Littleton	Rte 302	South	Unknown	Asphalt	Poor	Yes	Granite	Good	No	6.0 Bicycle Lane	None	36 inches to 60 inches	Greater than 80 inches	Greater than 0.50 inches	No	3.0 Greater than 2%	1.0	1.0	93	45
6512	0	12/14/2015	Patch district 1	Littleton	Rte 302	North	Unknown	Asphalt	Poor	Yes	Granite	Fair	No	4.0 Bicycle Lane	None	36 inches to 60 inches	Greater than 80 inches	Greater than 0.50 inches	No	3.0 Greater than 2%	1.0	1.0	93	45
6520	0	12/14/2015	Patch district 1	Littleton	Rte 302	North	Unknown	Asphalt	Poor	Yes	Granite	Fair	No	4.0 Bicycle Lane	None	36 inches to 60 inches	Greater than 80 inches	Greater than 0.50 inches	No	2.0 Greater than 2%	3.0	1.0	93	45
6521	0	12/14/2015	Patch district 1	Littleton	Rte 302	North	Unknown	Asphalt	Poor	Yes	Granite	Good	No	6.0 Bicycle Lane	None	36 inches to 60 inches	Greater than 80 inches	Greater than 0.50 inches	No	4.0 Greater than 2%	5.0	1.0	93	45
6533	0	12/15/2015	Wilkinson District 1	Littleton	Rte. 116	North	Unknown	Asphalt	Poor	Yes	Granite	Fair	No	2.0 None	None	36 inches to 60 inches	Greater than 80 inches	Greater than 0.50 inches	No	7.0 Greater than 2%	9.0	1.0	93	45
6551	0	12/15/2015	Nichols district 1	Littleton	Rte 135	South	Unknown	Asphalt	Poor	Yes	Granite	Poor	No	0.0 Bicycle Lane	None	36 inches to 60 inches	Greater than 80 inches	Greater than 0.50 inches	No	1.0 Greater than 2%	2.0	1.0	93	45
6580	0	12/16/2015	Wilkinson District 1	Littleton	Cottage Street-Rtes. 302,18,116	West	Unknown	Asphalt	Poor	Yes	None	N/A	No	0.0 Grass Strip	None	36 inches to 60 inches	Greater than 80 inches	Greater than 0.50 inches	No	6.0 Greater than 2%	0.0	1.0	93	45
6581	0	12/16/2015	Wilkinson District 1	Littleton	Cottage Street-Rtes. 302,18,116	West	Unknown	Asphalt	Poor	Yes	Granite	Fair	No	3.0 None	None	36 inches to 60 inches	Greater than 80 inches	Greater than 0.50 inches	No	2.0 Greater than 2%	3.0	1.0	93	45
6588	0	12/16/2015	Wilkinson District 1	Littleton	Cottage Street-Rtes. 302,18,116	West	Unknown	Asphalt	Poor	Yes	Granite	Fair	No	5.0 Parking Spaces	None	36 inches to 60 inches	Greater than 80 inches	Greater than 0.50 inches	No	6.0 Greater than 2%	5.0	1.0	93	45
6673	0	12/21/2015	Patch district 1	Lisbon	Rte 302	North-West	Unknown	Asphalt	Poor	Yes	Granite	Poor	No	0.0 Parking Spaces	None	36 inches to 60 inches	Greater than 80 inches	Greater than 0.50 inches	No	3.0 Greater than 2%	2.0	1.0	93	45
6674	0	12/21/2015	Patch district 1	Lisbon	Rte 302	North-West	Unknown	Asphalt	Poor	Yes	Granite	Poor	No	0.5 Parking Spaces	None	36 inches to 60 inches	Greater than 80 inches	Greater than 0.50 inches	No	3.0 Greater than 2%	2.0	1.0	93	45
6783	0	1/6/2016	Melendy dist1	Woodstock	Rte 3	East	Unknown	Asphalt	Fair	Yes	Granite	Fair	No	2.0 Parking Spaces	None	36 inches to 60 inches	Greater than 80 inches	Greater than 0.50 inches	No	6.0 Greater than 2%	10.0	1.0	93	45
7939	0	1/28/2016	Wilkinson District 1	Franconia	Rte. 18 and 116	North-East	Unknown	Asphalt	Poor	Yes	None	N/A	No	1.0 Grass Strip	None	36 inches to 60 inches	Greater than 80 inches	Greater than 0.50 inches	No	5.0 Greater than 2%	0.0	1.0	93	45
7940	0	1/28/2016	Wilkinson District 1	Franconia	Rte. 18 and 116	North-East	Unknown	Asphalt	Poor	Yes	Granite	Fair	No	1.0 None	None	36 inches to 60 inches	Greater than 80 inches	Greater than 0.50 inches	No	3.0 Greater than 2%	2.0	1.0	93	45
7945	0	1/28/2016	Wilkinson District 1	Franconia	Rte. 116	East	Unknown	Asphalt	Poor	Yes	Asphalt	Fair	No	3.0 None	None	36 inches to 60 inches	Greater than 80 inches	Greater than 0.50 inches	No	3.0 Greater than 2%	8.0	1.0	93	45
9099	0	3/17/2016	Wilkinson District 1	Woodstock	Rte. 3	West	Unknown	Asphalt	Poor	Yes	Granite	Good	No	3.000000000000 Parking Spaces	None	36 inches to 60 inches	Greater than 80 inches	Greater than 0.50 inches	No	2.0 Greater than 2%	2.0	1.0	93	45
4986	42801	11/2/2015	Melendy district one	Colebrook	Rte26	North	Unknown	Asphalt	Fair	Yes	Granite	Fair	No	4.0 None	Vegetation	36 inches to 60 inches	less than 80in	Greater than 0.50 inches	No	3.0 Less than or equal to 2%	1.0	1.0	93	45
5195	0	11/30/2015	Sandt DOT	Wakefield	Rt 109	South	Unknown	Stamped Asphalt	Fair	Yes	Granite	Good	No	3.0 None	None	36 inches to 60 inches	Unlimited	Less than 0.25 inches	Yes	16.0 Greater than 2%	16.0	1.0	92	46
4376	41348	8/20/2015	Sandt DOT	Peterborough	Grove Street	East	Unknown	Concrete	Fair	Yes	Granite	Good	No	8.0 None	None	36 inches to 60 inches	Greater than 80 inches	Greater than 0.50 inches	Yes	4.0 Less than or equal to 2%	0.0	1.0	92	46
6324	0	12/7/2015	Nichols district 1	Groveton	Rte 3	West	Unknown	Concrete	Fair	Yes	Granite	Fair	No	2.0 Parking Spaces	Hydrant	36 inches to 60 inches	Greater than 80 inches	Greater than 0.50 inches	No	1.0 Less than or equal to 2%	9.0	1.0	92	46
6421	0	12/9/2015	Nichols district 1	Lancaster	Rte 2 and Rte 3	West	Unknown	Concrete	Fair	Yes	Granite	Poor	No	1.0 Grass Strip	Fixed Object	36 inches to 60 inches	Greater than 80 inches	Greater than 0.50 inches	No	1.0 Less than or equal to 2%	9.0	1.0	92	46
6531	0	12/15/2015	Wilkinson District 1	Littleton	Rte. 116	North	Unknown	Asphalt	Poor	Yes	Granite	Good	No	3.0 Parking Spaces	None	36 inches to 60 inches	less than 80in	Greater than 0.50 inches	No	1.0 Less than or equal to 2%	2.0	1.0	92	46
7937	0	1/28

9098	0	3/17/2016	Wilkinson District 1	Woodstock	Rte. 3	West	Unknown	Asphalt	Fair	Yes	Granite	Good	No	6.00000000000	None	Fixed Object	36 inches to 60 inches	Greater than 80 inches	Greater than 0.50 inches	No	1.0 Less than or equal to 2%	2.0	1.0	88	48
4594	41567	9/22/2015	Sandt DOT	Epping	Water Street	South	Unknown	Brick	Good	Yes	Granite	Good	No	3.0	None	None	36 inches to 60 inches	Unlimited	Greater than 0.50 inches	Yes	6.0 Less than or equal to 2%	3.0	1.0	87	49
4954	42769	10/29/2015	Sandt DOT	Hampton	Ocean Blvd	West	Unknown	Asphalt	Fair	Yes	Asphalt	Poor	No	0.0	None	Water	36 inches to 60 inches	Unlimited	0.25 inches to 0.50 inches	Yes	1.0 Greater than 2%	4.0	1.0	87	49
4955	42770	10/29/2015	Sandt DOT	Hampton	Ocean Blvd	West	Unknown	Asphalt	Fair	Yes	Asphalt	Poor	No	0.0	None	Water	36 inches to 60 inches	Unlimited	0.25 inches to 0.50 inches	Yes	1.0 Greater than 2%	2.0	1.0	87	49
4956	42771	10/29/2015	Sandt DOT	Hampton	Ocean Blvd	West	Unknown	Asphalt	Fair	Yes	Asphalt	Poor	No	0.0	None	Water	36 inches to 60 inches	Unlimited	0.25 inches to 0.50 inches	Yes	1.0 Greater than 2%	4.0	1.0	87	49
4957	42772	10/29/2015	Sandt DOT	Hampton	Ocean Blvd	West	Unknown	Asphalt	Fair	Yes	Asphalt	Fair	No	1.0	None	Water	36 inches to 60 inches	Unlimited	0.25 inches to 0.50 inches	Yes	1.0 Greater than 2%	4.0	1.0	87	49
4958	42773	10/29/2015	Sandt DOT	Hampton	Ocean Blvd	West	Unknown	Asphalt	Fair	Yes	Asphalt	Fair	No	1.0	None	Water	36 inches to 60 inches	Unlimited	0.25 inches to 0.50 inches	Yes	1.0 Greater than 2%	4.0	1.0	87	49
477	1041	6/15/2015	Sandt DOT	Pembroke	Pembroke Road	Northeast	Unknown	Asphalt	Good	No	Granite	Good	No	2.0	None	Fixed Object	less than 36 inches	Less than 80in	Greater than 0.50 inches	No	4.0 Greater than 2%	4.0	1.0	87	49
6319	0	12/7/2015	Nichols district 1	Groveton	Rte 3	East	Unknown	Concrete	Poor	Yes	None	N/A	No	0.0	Parking Spaces	None	36 inches to 60 inches	Greater than 80 inches	Greater than 0.50 inches	No	0.5 Less than or equal to 2%	4.0	1.0	87	49
6323	0	12/7/2015	Nichols district 1	Groveton	Rte 3	South	Unknown	Concrete	Poor	Yes	None	N/A	No	0.0	Parking Spaces	None	36 inches to 60 inches	Greater than 80 inches	Greater than 0.50 inches	No	0.5 Less than or equal to 2%	1.0	1.0	87	49
6326	0	12/7/2015	Nichols district 1	Groveton	Rte 3	North	Unknown	Concrete	Poor	Yes	Concrete	Poor	No	1.0	None	None	36 inches to 60 inches	Greater than 80 inches	Greater than 0.50 inches	No	4.0 Less than or equal to 2%	0.0	1.0	87	49
6656	0	12/18/2015	Sandt DOT	Center Harbor	Main Street	North	Unknown	Asphalt	Fair	Yes	None	Good	No	0.0	Grass Strip	None	36 inches to 60 inches	Greater than 80 inches	Less than 0.25 inches	No	9.0 Greater than 2%	0.0	1.0	87	49
7934	0	1/28/2016	Wilkinson District 1	Franconia	Rte. 18 and 116	North-East	Unknown	Asphalt	Fair	Yes	Asphalt	Fair	No	2.0	None	None	36 inches to 60 inches	Less than 80in	Greater than 0.50 inches	No	6.0 Greater than 2%	17.0	1.0	87	49
889	3257	7/24/2015	Sandt DOT	Auburn	Manchester Road	North	Unknown	Asphalt	Fair	Yes	Granite	Good	No	1.0	None	Vegetation	less than 36 inches	Unlimited	Level	No	3.0 Greater than 2%	2.0	1.0	86	49
846	3214	7/23/2015	Sandt DOT	Derry	E Broadway	Northwest	Unknown	Stamped Asphalt	Good	Yes	Granite	Good	No	4.0	Parking Spaces	Utility Pole	Greater than 60 inches	Greater than 80 inches	Level	Yes	2.0 Greater than 2%	0.0	1.0	86	49
4360	41332	8/18/2015	Sandt DOT	Greenfield	Forest	South	Unknown	Asphalt	Fair	Yes	None	N/A	No	0.0	Grass Strip	None	36 inches to 60 inches	Greater than 80 inches	0.25 inches to 0.50 inches	Yes	4.0 Greater than 2%	0.0	1.0	86	49
4454	41427	9/1/2015	Sandt DOT	Boscawen	N Main	West	Unknown	Asphalt	Fair	Yes	None	N/A	No	0.0	None	None	36 inches to 60 inches	Greater than 80 inches	0.25 inches to 0.50 inches	Yes	6.0 Greater than 2%	0.0	1.0	86	49
4562	41535	9/18/2015	Sandt DOT	Newport	Rt 10	East	Unknown	Asphalt	Fair	Yes	None	N/A	No	0.0	Grass Strip	None	36 inches to 60 inches	Greater than 80 inches	0.25 inches to 0.50 inches	Yes	7.0 Greater than 2%	0.0	1.0	86	49
4869	42682	10/22/2015	Sandt DOT	Portsmouth	Market Street	North	Unknown	Asphalt	Fair	Yes	Granite	Good	No	6.0	Grass Strip	None	36 inches to 60 inches	Greater than 80 inches	0.25 inches to 0.50 inches	Yes	2.0 Greater than 2%	0.0	1.0	86	49
5030	42925	11/2/2015	Nichols district 1	Colebrook	Rte 26	South	Unknown	Asphalt	Fair	Yes	Granite	Fair	No	4.0	Parking Spaces	Fixed Object	36 inches to 60 inches	Greater than 80 inches	0.25 inches to 0.50 inches	No	0.0 Greater than 2%	3.0	1.0	86	49
6152	0	11/25/2015	Sandt DOT	Alton	Mount Major Hwy	East	Unknown	Asphalt	Fair	Yes	Granite	Good	No	2.0	None	None	36 inches to 60 inches	Greater than 80 inches	0.25 inches to 0.50 inches	Yes	6.0 Greater than 2%	7.0	1.0	86	49
6352	0	12/8/2015	Nichols district 1	Lancaster	Rte 2	South-West	Unknown	Asphalt	Fair	Yes	Granite	Fair	No	6.0	Bicycle Lane	Fixed Object	36 inches to 60 inches	Greater than 80 inches	0.25 inches to 0.50 inches	Yes	3.0 Greater than 2%	14.0	1.0	86	49
6394	0	12/9/2015	Sandt DOT	Mont Vernon	Rt 13	North-East	Unknown	Asphalt	Fair	Yes	Granite	Good	No	2.0	None	None	36 inches to 60 inches	Greater than 80 inches	0.25 inches to 0.50 inches	Yes	8.0 Greater than 2%	9.0	1.0	86	49
6395	0	12/9/2015	Sandt DOT	Mont Vernon	Rt 13	South-West	Unknown	Asphalt	Fair	Yes	Granite	Good	No	2.0	Grass Strip	None	36 inches to 60 inches	Greater than 80 inches	0.25 inches to 0.50 inches	Yes	5.0 Greater than 2%	9.0	1.0	86	49
6636	0	12/17/2015	Nichols district 1	Lisbon	Rte 302	East	Unknown	Asphalt	Fair	Yes	Asphalt	Fair	No	4.0	Bicycle Lane	Utility Pole	36 inches to 60 inches	Greater than 80 inches	0.25 inches to 0.50 inches	No	1.0 Greater than 2%	4.0	1.0	86	49
6642	0	12/17/2015	Nichols district 1	Lisbon	Rte 302	East	Unknown	Asphalt	Fair	Yes	Granite	Fair	No	3.0	Bicycle Lane	Utility Pole	36 inches to 60 inches	Greater than 80 inches	0.25 inches to 0.50 inches	No	1.0 Greater than 2%	5.0	1.0	86	49
6716	0	12/16/2015	Sandt DOT	Tilton	Rt 3	North	Unknown	Asphalt	Fair	Yes	None	Good	No	0.0	Grass Strip	None	36 inches to 60 inches	Greater than 80 inches	0.25 inches to 0.50 inches	Yes	8.0 Greater than 2%	0.0	1.0	86	49
6724	0	12/24/2015	Sandt DOT	New London	Rt 114	North-East	Unknown	Asphalt	Fair	Yes	None	Good	No	0.0	Grass Strip	None	36 inches to 60 inches	Greater than 80 inches	0.25 inches to 0.50 inches	Yes	2.0 Greater than 2%	0.0	1.0	86	49
6726	0	12/24/2015	Sandt DOT	New London	Rt 114	North-East	Unknown	Asphalt	Fair	Yes	None	Good	No	0.0	Grass Strip	None	36 inches to 60 inches	Greater than 80 inches	0.25 inches to 0.50 inches	Yes	2.0 Greater than 2%	0.0	1.0	86	49
6772	0	1/5/2016	Sandt DOT	Belmont	Rt 140	North-West	Unknown	Asphalt	Fair	Yes	Granite	Good	No	4.0	None	None	36 inches to 60 inches	Greater than 80 inches	0.25 inches to 0.50 inches	Yes	1.0 Greater than 2%	4.0	1.0	86	49
6775	0	1/5/2016	Sandt DOT	Belmont	Rt 140	South-East	Unknown	Asphalt	Fair	Yes	Granite	Good	No	3.0	None	None	36 inches to 60 inches	Greater than 80 inches	0.25 inches to 0.50 inches	Yes	2.0 Greater than 2%	4.0	1.0	86	49
6776	0	1/5/2016	Sandt DOT	Belmont	Rt 140	South-East	Unknown	Asphalt	Fair	Yes	Granite	Good	No	4.0	None	None	36 inches to 60 inches	Greater than 80 inches	0.25 inches to 0.50 inches	Yes	7.0 Greater than 2%	2.0	1.0	86	49
6807	0	1/7/2016	Sandt DOT	New London	Rt 114	North-East	Unknown	Asphalt	Fair	Yes	None	N/A	No	0.0	Grass Strip	None	36 inches to 60 inches	Greater than 80 inches	0.25 inches to 0.50 inches	Yes	1.0 Greater than 2%	0.0	1.0	86	49
6847	0	1/11/2016	Wilkinson District 1	Lincoln	Rte 112	North-West	Unknown	Asphalt	Fair	Yes	Granite	Fair	No	5.0	Parking Spaces	None	36 inches to 60 inches	Greater than 80 inches	0.25 inches to 0.50 inches	Yes	1.0 Greater than 2%	0.0	1.0	86	49
9000	0	2/22/2016	Sandt DOT	Laconia	Rt 3	North-East	Unknown	Asphalt	Fair	Yes	None	N/A	No	0.0	Grass Strip	None	36 inches to 60 inches	Greater than 80 inches	0.25 inches to 0.50 inches	Yes	6.0 Greater than 2%	0.0	1.0	86	49
9037	0	3/11/2016	Sandt DOT	Windham	I93N	East	Unknown	Concrete	Fair	Yes	Concrete	Fair	No	6.00000000000	None	None	36 inches to 60 inches	Greater than 80 inches	Less than 0.25 inches	Yes	0.0 Greater than 2%	0.0	1.0	86	49
9039	0	3/11/2016	Sandt DOT	Windham	I93S	East	Unknown	Concrete	Fair	Yes	Concrete	Fair	No	6.00000000000	None	None	36 inches to 60 inches	Greater than 80 inches	Less than 0.25 inches	Yes	0.0 Greater than 2%	0.0	1.0	86	49
9040	0	3/11/2016	Sandt DOT	Windham	I93S	West	Unknown	Concrete	Fair	Yes	Concrete	Fair	No	6.00000000000	None	None	36 inches to 60 inches	Greater than 80 inches	Less than 0.25 inches	Yes	0.0 Greater than 2%	0.0	1.0	86	49
5041	42936	10/29/2015	Sandt DOT	Hampton	Ocean Blvd	W	Unknown	Asphalt	Fair	Yes	Asphalt	Poor	No	0.0	None	Utility pole	Greater than 60 inches	Unlimited	Level	Yes	1.0 Greater than 2%	4.0	1.0	85	50
489	1053	6/17/2015	Sandt DOT	Pembroke	Main	Southeast	Unknown	Asphalt	Fair	Yes	Asphalt	Good	No	3.0	None	Utility Pole	36 inches to 60 inches	Unlimited	Greater than 0.50 inches	No	6.0 Less than or equal to 2%	11.0	1.0	85	50
497	1061	6/17/2015	Sandt DOT	Allenstown	Main	East	Unknown	Asphalt	Good	Yes	Concrete	Fair	No	2.0	Parking Spaces	Utility Pole	36 inches to 60 inches	Unlimited	Greater than 0.50 inches	No	4.0 Greater than 2%	1.0	1.0	85	50
641	2140	7/2/2015	Sandt DOT	Manchester	Hanover Street	North	Unknown	Asphalt	Fair	Yes	Granite	Good	No	4.0	Parking Spaces	Utility Pole	36 inches to 60 inches	Unlimited	Greater than 0.50 inches	No	3.0 Less than or equal to 2%	3.0	1.0	85	50
789	2288	7/17/2015	Sandt DOT	Pittsfield	Catamount Road	North	Unknown	Asphalt	Fair	Yes	Granite	Good	No	2.0	None	None	36 inches to 60 inches	Unlimited	Greater than 0.50 inches	Yes	3.0 Less than or equal to 2%	2.0	1.0	85	50
4361	41333	8/18/2015	Sandt DOT	Peterborough	202	West	Unknown	Asphalt	Fair	Yes	Granite	Good	No	3.0	Grass Strip	None	36 inches to 60 inches	Unlimited	Greater than 0.50 inches	Yes	3.0 Less than or equal to 2%	11.0	1.0	85	50
4437	41409	8/28/2015	Sandt DOT	Troy	South Main	Northeast	Unknown	Asphalt	Fair	Yes	Granite	Good	No	1.0	None	None	36 inches to 60 inches	Unlimited	Greater than 0.50 inches	Yes	4.0 Less than or equal to 2%	1.0	1.0	85	50
4564	41537	9/18/2015	Sandt DOT	Newport	Laurel Street	East	Unknown	Asphalt	Fair	Yes	None	N/A	No	0.0	Grass Strip	None	36 inches to 60 inches	Unlimited	Greater than 0.50 inches	Yes	4.0 Less than or equal to 2%	0.0	1.0	85	50
4566	41539	9/18/2015	Sandt DOT	Newport	Laurel Street	East	Unknown	Asphalt	Fair	Yes	None	N/A	No	0.0	Grass Strip	None	36 inches to 60 inches	Unlimited	Greater than 0.50 inches	Yes	3.0 Less than or equal to 2%	0.0	1.0	85	50
4585	41558	9/22/2015	Sandt DOT	Epping	Beede Hill Road	West	Unknown	Asphalt	Good	Yes	Granite	Good	No	6.0	None	None	36 inches to 60 inches	Unlimited	Greater than 0.50 inches	Yes	3.0 Greater than 2%	0.0	1.0	85	50
4633	41606	9/25/2015	Sandt DOT	Brentwood	North Road	Southeast	Unknown	Asphalt	Good	Yes	Granite	Good	No	5.0	None	Vegetation	36 inches to 60 inches	Unlimited	Less than 0.25 inches	Yes	3.0 Greater than 2%	0.0	1.0	85	50
4835	42648	10/19/2015	Sandt DOT	Concord	South Street	West	Unknown	Asphalt	Fair	Yes	Granite	Good	No	6.0	Grass Strip	None	36 inches to 60 inches	Unlimited	Greater than 0.50 inches	Yes	3.0 Less than or equal to 2%	11.0	1.0	85	50
4946	42760	10/27/2015	Sandt DOT	Hampton	Ocean Blvd	Southeast	Unknown	Asphalt	Good	Yes	Asphalt	Fair	No	1.0	None	Utility Pole	36 inches to 60 inches	Unlimited	Level	Yes	1.0 Greater than 2%	8.0	1.0	85	50
4962	42777	10/29/2015	Sandt DOT	Hampton	Ocean Blvd	W	Unknown	Asphalt	Good	Yes	Asphalt	Poor	No	0.0	None	Utility Pole	36 inches to 60 inches	Unlimited	Level	Yes	1.0 Greater than 2%	1.0	1.0	85	50
6791	0	1/7/2016	Sandt DOT	Tilton	Rt 140	South-West	Unknown	Asphalt	Fair	Yes	Granite	Good	No	4.0	None	None	36 inches to 60 inches	Unlimited	Greater than 0.50 inches	Yes	7.0 Less than or equal to 2%	1.0	1.0	85	50
4197	34725	7/31/2015	Sandt DOT	Warner	W Main Street	North	Unknown	Asphalt	Fair	Yes	None	Good	No	0.0	None	None	36 inches to 60 inches	Less than 80in	0.25 inches to 0.50 inches	Yes	2.0 Less than or equal to 2%	0.0	1.0	85	50
4612	41585	9/24/2015	Sandt DOT	Enfield	Depot Street	North	Unknown	Stamped Asphalt	Good	Yes	Asphalt	Good	No	5.0	None	None	36 inches to 60 inches	Greater than 80 inches	0.25 inches to 0.50 inches	Yes	10.0 Greater than 2%	3.0	1.0	85	50
4617	41590	9/24/2015	Sandt DOT	Enfield	Shaker Hill Road	Northeast	Unknown	Stamped Asphalt	Good	Yes	Granite	Good	No	6.0	None	None	36 inches to 60 inches	Greater than 80 inches	Less than 0.25 inches	No	13.0 Greater than 2%	1.0	1.0	85	50
805	3172	7/20/2015	Sandt DOT	Chichester	US 202	North	Unknown	Asphalt	Good	Yes	Granite	N/A	No	0.0	Grass Strip	Vegetation	less than 36 inches	Unlimited	0.25 inches to 0.50 inches	No	2.0 Greater than 2%	0.0	1.0	84	51
4321	41295	8/14/2015	Sandt DOT	Hillsborough	Bridge Street	East	Unknown	Asphalt	Fair	Yes	None	N/A	No	0.0	None	None	36 inches to 60 inches	Unlimited	Less than 0.25 inches	Yes	26.0 Greater than 2%	5.0	1.0	84	51
4677	41650	10/1/2015	Sandt DOT	Northwood	Rt 4	Northwest	Unknown	Asphalt	Good	Yes	Granite	Good	No	3.0	None	Vegetation	less than 36 inches	Unlimited	0.25 inches to 0.50 inches	No	2.0 Greater than 2%	6.0	1.0	84	51
5200	0	11/20/2015	Sandt DOT	Wakefield	Rt 109	North	Unknown	Asphalt	Fair	Yes	Granite	Good	No	3.0	None	None	36 inches to 60 inches	Unlimited	Less than 0.25 inches	No	16.0 Greater than 2%	0.0	1.0	84	51
542	2041	6/25/2015	Sandt DOT	Hooksett	W River	Northwest	Unknown	Asphalt	Good	Yes	Asphalt	Good	No	4.0	Grass Strip	Vegetation	36 inches to 60 inches	Greater than 80 inches	Greater than 0.50 inches	Yes	5.3 Greater than 2%	5.0	1.0	84	51
544	2043	6/25/2015	Sandt DOT	Manchester / Hooksett	Mammoth	East	Unknown	Asphalt	Fair	Yes	Granite	Good	No	6.0	Grass Strip	Vegetation	36 inches to 60 inches	Greater than 80 inches	Greater than 0.50 inches	No	3.0 Less than or equal to 2%	4.0	1.0	84	51
4755	0	12/31/2015	Nichols district 1	Woodsville	Rte 302	South	Unknown	Asphalt	Fair	Yes	Granite	Fair	No	6.0	Bicycle Lane	Drain	36 inches to 60 inches	Greater than 80 inches	Greater than 0.50 inches	No	1.0 Less than or equal to 2%	2.0	1.0	84	51
4762	41735	10/7/2015	Sandt DOT	Newington	Gosling Road	South	Unknown	Asphalt	Fair	Yes	Granite	Good	No	5.0	None	Utility Pole	Greater than 60 inches	Unlimited	0.25 inches to 0.50 inches	Yes	1.0 Less than or equal to 2%	0.0	1.0	83	51
802	2301	7/17/2015	Sandt DOT	Pittsfield	Main Street	Northeast	Unknown	Asphalt	Fair	Yes	Granite	Fair	No	2.0	Grass Strip	None	36 inches to 60 inches	Unlimited	0.25 inches to 0.50 inches	Yes	3.0 Greater than 2%	3.0	1.0	83	51
4267	41237	8/10/2015	Sandt DOT	Hillsborough	Center	East	Unknown	Asphalt	Fair	Yes	Granite	Good	No	6.0	None	None	36 inches to 60 inches	Unlimited	0.25 inches to 0.50 inches	Yes	1.0 Greater than 2%	5.0	1.0	83	51
4312	41283	8/14/2015	Sandt DOT	Wilton	Island Street	Northwest	Unknown	Asphalt	Fair	Yes	Granite	Fair	No	0.0	None	Utility Pole	36 inches to 60 inches	Unlimited	0.25 inches to 0.50 inches	No	3.0 Greater than 2%	6.0	1.0	83	51
4313	41284	8/14/2015	Sandt DOT	Wilton	Forest Road	East	Unknown	Asphalt	Fair	Yes	Granite	Fair	No	1.0	None	None	36 inches to 60 inches	Unlimited	0.25 inches to 0.50 inches	Yes	1.0 Greater than 2%	0.0	1.0	83	51
4366	41338	8/19/2015	Sandt DOT	Peterborough	Main	South	Unknown	Asphalt	Fair	Yes	Granite	Good	No	7.0	Parking Spaces	None	36 inches to 60 inches	Unlimited	0.25 inches to 0.50 inches	Yes	8.0 Greater than 2%	1.0	1.0	83	51
4367	41339	8/19/2015	Sandt DOT	Peterborough	Main	South	Unknown	Asphalt	Fair	Yes	Granite	Good	No	5.0	Parking Spaces	None	36 inches to 60 inches	Unlimited	0.25 inches to 0.50 inches	Yes	4.0 Greater than 2%	1.0	1.0	83	51
4385	41357	8/20/2015	Sandt DOT	New Ipswich	Turnpike Road	South	Unknown	Asphalt	Fair	Yes	Granite	Good	No	5.0	None	None	36 inches to 60 inches	Unlimited	0.25 inches to 0.50 inches	Yes	5.0 Greater than 2%	9.0	1.0	83	51
4409	41381	8/27/2015	Sandt DOT	Jaffrey	Peterborough Street	Southeast	Unknown	Asphalt	Fair	Yes	Granite	Good	No	4.0	None	None	36 inches to 60 inches	Unlimited	0.25 inches to 0.50 inches	Yes	5.0 Greater than 2%	5.0	1.0	83	51
4410	41382	8/27/2015	Sandt DOT	Jaffrey	Peterborough Street	East	Unknown	Asphalt	Fair	Yes	Granite	Good	No	3.0	None	None	36 inches to 60 inches	Unlimited	0.25 inches to 0.50 inches	Yes	5.0 Greater than 2%	0.0	1.0	83	51
4841	42654	10/30/2015	Sandt DOT	Exeter	Portsmouth Ave	Northwest	Unknown	Asphalt	Fair	Yes	Granite	Good	No	3.0	Grass Strip	None	36 inches to 60 inches	Unlimited	0.25 inches to 0.50 inches	Yes	5.0 Greater than 2%	28.0	1.0	83	51
5196	0	11/20/2015	Sandt DOT	Wakefield	Rt 109	North	Unknown	Stamped Asphalt	Good	No	Granite	Good	No	3.0	None	None	36 inches to 60 inches	Unlimited	Greater than 0.50 inches	Yes	13.0 Less than or equal to 2%	1.0	1.0	83	51
5019	42914	10/27/2015	Nichols district 1	Colebrook	Rte 3	East	Unknown	Asphalt	Poor	Yes	Granite	Fair	No	4.0	Parking Spaces	None	Greater than 60 inches	Greater than 80 inches	Greater than 0.50 inches	No	0.6 Greater than 2%	5.0	1.0	83	51
6244	0	12/3/2015	Sandt DOT	Holderness	Bridge Street	South	Unknown	Asphalt	Good	Yes	Granite	Good	No	5.0	Grass Strip	None	Greater than 60 inches	Greater than 80 inches	Level	Yes	10.0 Greater than 2%	0.0	1.0	83	51
6441	0	12/10/2015	Wilkinson District 1	Bethlehem	Rte. 302	North	Unknown	Asphalt	Poor	Yes	Asphalt	Poor	No	2.0	Parking Spaces	None	Greater than 60 inches	Greater than 80 inches	Greater than 0.50 inches	No	5.0 Greater than 2%	13.0	1.0	83	51
483	1047	6/15/2015	Sandt DOT	Pembroke	Pembroke Road	Northeast	Unknown	Asphalt	Good	Yes	Granite	Good	No	2.5	Grass Strip	Vegetation	36 inches to 60 inches	Less than 80in	Greater than 0.50 inches	Yes	1.0 Less than or equal to 2%	27.0	1.0	83	51
535	1101	6/24/2015	Sandt DOT	Hooksett / Manchester	Daniel Webster Hwy	Southeast	Unknown	Asphalt	Good	No	Granite	Good	No	5.0	Other	Vegetation	less than 36 inches	Less than 80in	Greater than 0.50 inches	No	4.6 Greater than 2%	1.0	1.0	83	51
4238	41207	8/7/2015	Sandt DOT	Goffstown	Main Street	Northeast	Unknown	Asphalt	Good	Yes	Granite	Good	No	6.0	None	None	36 inches to 60 inches	Greater than 80 inches	Level	Yes	14.0 Less than or equal to 2%	1.0	1.0	83	51
4286	41257	8/12/2015	Sandt DOT	Nashua	Lamaine	Northwest	Unknown	Asphalt	Good	Yes	Granite	Good	No	4.0	Grass Strip	None	36 inches to 60 inches	Greater than 80 inches	Level	Yes	12.0 Less than or equal to 2%	1.0	1.0	83	51
4430	41402	8/28/2015	Sandt DOT	Troy	Rt 12	East	Unknown	Asphalt	Good	Yes	Granite	Good	No	2.0	None	Utility Pole	less than 36 inches	Greater than 80 inches	Level	No	5.0 Greater than 2%	7.0	1.0	83	51
5168	0	11/19/2015	Wilkinson District 1	Gorham	Rte. 2 and Rte. 16	South	Unknown	Asphalt	Poor	Yes	Granite	Good	No	4.0	Grass Strip	None	36 inches to 60 inches	Greater than 80 inches	Greater than 0.50 inches	No	2.0 Less than or equal to 2%	2.0	1.0	83	51
6187	0	11/30/2015	Nichols district 1	Gorham	Rte 2	South	Unknown	Asphalt	Poor	Yes	None	N/A	No	1.0	Bicycle Lane	None	36 inches to 60 inches	Greater than 80 inches	Greater than 0.50 inches	No	1.5 Less than or equal to 2%	0.0	1.0	83	51
6317	0	12/1/2015	Nichols district 1	Groveton	Rte 3	West	Unknown	Asphalt	Poor	Yes	Asphalt	Poor	No	1.0	Parking Spaces	None	36 inches to 60 inches	Greater than 80 inches	Greater than 0.50 inches	No	6.0 Less than or equal to 2%	1.0	1.0	83	51
6340	0	12/7/2015	Wilkinson District 1	Whitefield	Rte. 3	North	Unknown	Asphalt	Poor	Yes	None	Good	Yes	0.0	Bicycle Lane	None	36 inches to 60 inches	Greater than 80 inches	Greater than 0.50 inches	No	6.0 Less than or equal to 2%	0.0	1.0	83	51
6366	0	12/8/2015	Melendy District 1	Whitefield	Rte. 116	South	Unknown	Asphalt	Poor	Yes	Granite	Poor	No	0.5	None	None	36 inches to 60 inches	Greater than 80 inches	Greater than 0.50 inches	No	8.0 Less than or equal to 2%	2.0	1.0	83	51
6384	0	12/8/2015	Melendy District 1	Whitefield	Rte. 142	West	Unknown	Asphalt	Poor	Yes	None	N/A	No	0.0	Other	None	36 inches to 60 inches	Greater than 80 inches	Greater than 0.50 inches	No	6.0 Less than or equal to 2%	0.0	1.0	83	51
6388	0	12/7/2015	Wilkinson District 1	Whitefield	Rte. 3	West	Unknown	Asphalt	Poor	Yes	Asphalt	Poor	No	6.0		None	36 inches to 60 inches	Greater than 80 inches	Greater than 0.50 inches	No	1.0 Less than or equal to 2%	1.0	1.0	83	51
6438	0	12/10/2015	Wilkinson District 1	Bethlehem	Rte. 302	South	Unknown	Asphalt	Poor	Yes	None	Good	Yes	0.0	Parking Spaces	Utility Pole	36 inches to 60 inches	Greater than 80 inches	Level	No	3.0 Less than or equal to 2%	0.0	1.0	83	51
6705	0	12/23/2015	Sandt DOT	Andover	Rt 4	South	Unknown	Asphalt	Good	Yes	Granite	Good	No	4.0	None	None	36 inches to 60 inches	Greater than 80 inches	Level	Yes	9.0 Less than or equal to 2%	0.0	1.0	83	51
7923	0	1/28/2016	Nichols district 1	Franconia	Rte 18	North	Unknown	Asphalt	Poor	Yes	Asphalt	Poor	No	1.0	None	None	36 inches to 60 inches	Greater than 80 inches	Greater than 0.50 inches	No	1.0 Less than or equal to 2%	19.0	1.0	83	51
9041	0	3/11/2016	Sandt DOT	Plaistow	Plaistow Park n Ride	West	Unknown	Asphalt	Fair	Yes	Granite	Good	No	7.00000000000	None	Vegetation	less than 36 inches	Greater than 80 inches	Less than 0.25 inches	No	4.0 Less than or equal to 2%	2.0	1.0	83	51
6566	0	12/15/2015	Sandt DOT	Tilton	School Street	East	Unknown	Asphalt	Fair	Yes	Granite	Good	No	2.0	Parking Spaces	Fixed Sign	Greater than 60 inches	Greater than 80 inches	Less than 0.25 inches	Yes	3.0 Less than or equal to 2%	0.0	1.0	82	52
6567	0	12/15/2015	Sandt DOT	Tilton	Rt 3	North	Unknown	Asphalt	Fair	Yes	Granite	Good	No	2.0	Parking Spaces	Tree Trunk	Greater than 60 inches	Greater than 80 inches	Less than 0.25 inches	Yes	1.0 Less than or equal to 2%	0.0	1.0	82	52
4254	41221	8/7/2015	Sandt DOT	New Boston	Meetinghouse Hill Road	South	Unknown	Asphalt	Fair	Yes	Granite	Good	No	2.0	None	None	36 inches to 60 inches	Greater than 80 inches	Less than 0.25 inches	Yes	1.0 Greater than 2%	0.0	1.0	82	52
4283	41254	8/12/2015	Sandt DOT	Nashua	Amherst Street	South	Unknown	Asphalt	Good	Yes	Granite	Good	No	5.0	None	Vegetation	36 inches to 60 inches	Greater than 80 inches	0.25 inches to 0.50 inches	Yes	1.0 Less than or equal to 2%	0.0	1.0	82	52
4414	41386	8/27/2015	Sandt DOT	Jaffrey	Turnpike Street	North	Unknown	Asphalt	Fair	Yes	Granite	Fair	No	2.0	Parking Spaces	None	36 inches to 60 inches	Greater than 80 inches	Less than 0.25 inches	Yes	2.0 Greater than 2%	12.0	1.0	82	52
4415	41387	8/27/2015	Sandt DOT	Jaffrey	Turnpike Street	South	Unknown	Asphalt	Fair	Yes	Granite	Good	No	1.0	Parking Spaces	None	36 inches to 60 inches	Greater than 80 inches	Less than 0.25 inches	Yes	5.0 Greater than 2%	5.0	1.0	82	52
4431	41403	8/28/2015	Sandt DOT	Troy	Starkey Ave.	North	Unknown	Asphalt	Fair	Yes	Granite	Good	No	2.0	None	None	36 inches to 60 inches	Greater than 80 inches	Less than 0.25 inches	Yes	2.0 Greater than 2%	1.0	1.0	82	52
4495	41468	9/4/2015	Sandt DOT	Marlborough	Main St 101	Northeast	Unknown	Asphalt	Fair	Yes	Granite	Good	No	4.0	Grass Strip	None	36 inches to 60 inches	Greater than 80 inches	Less

4553	41526	9/17/2015	Sandt DOT	Newport	Rte 10	West	Unknown	Asphalt	Fair	Yes	None	N/A	No	0.0 Grass Strip	None	Greater than 60 inches	Greater than 80 inches	Greater than 0.50 inches	Yes	3.0 Less than or equal to 2%	0.0	1.0	78	54
4781	41754	10/12/2015	Sandt DOT	Rye	Ocean Blvd.	North	Unknown	Asphalt	Good	Yes	None	N/A	No	0.0 None	None	Greater than 60 inches	Greater than 80 inches	Greater than 0.50 inches	Yes	3.0 Greater than 2%	0.0	1.0	78	54
6213	0	12/1/2015	Wilkinson District 1	Errol	Rte. 26 and 16	North	Unknown	Asphalt	Fair	Yes	Granite	Poor	No	3.0 Bicycle Lane	Fixed Sign	Greater than 60 inches	Greater than 80 inches	Greater than 0.50 inches	Yes	2.0 Less than or equal to 2%	2.0	1.0	78	54
6548	0	12/15/2015	Nichols district 1	Littleton	Rte 302	North	Unknown	Asphalt	Fair	Yes	Granite	Fair	No	2.0 Bicycle Lane	Fixed Object	Greater than 60 inches	Greater than 80 inches	Greater than 0.50 inches	No	2.0 Less than or equal to 2%	4.0	1.0	78	54
491	1055	6/17/2015	Sandt DOT	Suncook	Main	Northwest	Unknown	Asphalt	Good	Yes	Granite	Good	No	1.0 Parking Spaces	Utility Pole	36 inches to 60 inches	Greater than 80 inches	Greater than 0.50 inches	No	4.0 Less than or equal to 2%	1.0	1.0	78	54
4743	41716	10/6/2015	Sandt DOT	Dover	Bellamy Road	Northwest	Unknown	Asphalt	Fair	Yes	Granite	Good	No	6.0 None	None	36 inches to 60 inches	Greater than 80 inches	Level	Yes	2.0 Greater than 2%	0.0	1.0	78	54
5032	42927	11/2/2015	Nichols district 1	Colebrook	Rte 26	South	Unknown	Asphalt	Fair	Yes	Granite	Fair	No	3.0 Parking Spaces	None	36 inches to 60 inches	Greater than 80 inches	Greater than 0.50 inches	No	3.6 Greater than 2%	7.0	1.0	78	54
5156	0	11/19/2015	Nichols district 1	Gorham	Rte 2	North-East	Unknown	Asphalt	Fair	Yes	Granite	Fair	No	4.0 Parking Spaces	None	36 inches to 60 inches	Greater than 80 inches	Greater than 0.50 inches	No	3.0 Greater than 2%	0.0	1.0	78	54
5161	0	11/19/2015	Nichols district 1	Gorham	Rte 2 and rte 16	North-East	Unknown	Asphalt	Fair	Yes	Granite	Fair	No	5.0 Parking Spaces	None	36 inches to 60 inches	Greater than 80 inches	Greater than 0.50 inches	No	1.0 Greater than 2%	5.0	1.0	78	54
5162	0	11/19/2015	Wilkinson District 1	Gorham	Rte. 2	South	Unknown	Asphalt	Fair	Yes	Granite	Good	No	3.0 Parking Spaces	None	36 inches to 60 inches	Greater than 80 inches	Greater than 0.50 inches	No	2.0 Greater than 2%	13.0	1.0	78	54
5164	0	11/19/2015	Wilkinson District 1	Gorham	Rte. 2	South	Unknown	Asphalt	Fair	Yes	Granite	Good	No	3.0 Bicycle Lane	None	36 inches to 60 inches	Greater than 80 inches	Greater than 0.50 inches	No	3.0 Greater than 2%	2.0	1.0	78	54
5165	0	11/19/2015	Wilkinson District 1	Gorham	Rte. 16	East	Unknown	Asphalt	Fair	Yes	Granite	Good	No	3.0 Bicycle Lane	None	36 inches to 60 inches	Greater than 80 inches	Greater than 0.50 inches	No	3.0 Greater than 2%	2.0	1.0	78	54
5167	0	11/19/2015	Nichols district 1	Gorham	Rte 2 and rte 16	North-East	Unknown	Asphalt	Fair	Yes	Granite	Fair	No	5.0 Parking Spaces	None	36 inches to 60 inches	Greater than 80 inches	Greater than 0.50 inches	No	3.0 Greater than 2%	4.0	1.0	78	54
5257	0	11/24/2015	Nichols district 1	Gorham	Rte 2 and Rte 16	South	Unknown	Asphalt	Fair	Yes	Granite	Fair	No	6.0 Parking Spaces	None	36 inches to 60 inches	Greater than 80 inches	Greater than 0.50 inches	No	2.0 Greater than 2%	7.0	1.0	78	54
5258	0	11/24/2015	Nichols district 1	Gorham	Rte 2 and Rte 16	South	Unknown	Asphalt	Fair	Yes	Granite	Fair	No	4.0 Parking Spaces	None	36 inches to 60 inches	Greater than 80 inches	Greater than 0.50 inches	No	1.0 Greater than 2%	10.0	1.0	78	54
5259	0	11/24/2015	Nichols district 1	Gorham	Rte 2 and Rte 16	South	Unknown	Asphalt	Fair	Yes	Granite	Fair	No	6.0 Parking Spaces	None	36 inches to 60 inches	Greater than 80 inches	Greater than 0.50 inches	No	3.0 Greater than 2%	3.0	1.0	78	54
5262	0	11/24/2015	Nichols district 1	Gorham	Rte 2 and Rte 16	South	Unknown	Asphalt	Fair	Yes	Granite	Fair	No	4.0 Parking Spaces	None	36 inches to 60 inches	Greater than 80 inches	Greater than 0.50 inches	No	4.0 Greater than 2%	3.0	1.0	78	54
6137	0	11/25/2015	Nichols district 1	Gorham	Rte 2 and Rte 16	North-East	Unknown	Asphalt	Fair	Yes	Granite	Fair	No	4.0 Parking Spaces	None	36 inches to 60 inches	Greater than 80 inches	Greater than 0.50 inches	No	2.0 Greater than 2%	2.0	1.0	78	54
6138	0	11/25/2015	Nichols district 1	Gorham	Rte 2 and Rte 16	North-East	Unknown	Asphalt	Fair	Yes	Granite	Fair	No	4.0 None	None	36 inches to 60 inches	Greater than 80 inches	Greater than 0.50 inches	No	2.0 Greater than 2%	2.0	1.0	78	54
6140	0	11/25/2015	Nichols district 1	Gorham	Rte 2 and Rte 16	South	Unknown	Asphalt	Fair	Yes	Granite	Fair	No	4.0 Parking Spaces	None	36 inches to 60 inches	Greater than 80 inches	Greater than 0.50 inches	No	2.0 Greater than 2%	5.0	1.0	78	54
6186	0	11/30/2015	Nichols district 1	Gorham	Rte 2	South	Unknown	Asphalt	Fair	Yes	Granite	Fair	No	4.0 None	None	36 inches to 60 inches	Greater than 80 inches	Greater than 0.50 inches	No	2.5 Greater than 2%	3.0	1.0	78	54
6211	0	12/1/2015	Wilkinson District 1	Errol	Rte. 26	North-East	Unknown	Asphalt	Good	Yes	Granite	Good	No	6.0 Bicycle Lane	None	36 inches to 60 inches	Greater than 80 inches	Greater than 0.50 inches	Yes	5.0 Less than or equal to 2%	1.0	1.0	78	54
6373	0	12/8/2015	Melendy District 1	Whitefield	Rte. 3	East	Unknown	Asphalt	Fair	Yes	Concrete	Poor	Yes	1.0 None	None	36 inches to 60 inches	Greater than 80 inches	Greater than 0.50 inches	No	4.0 Greater than 2%	2.0	1.0	78	54
6385	0	12/8/2015	Melendy District 1	Whitefield	Rte. 142	West	Unknown	Asphalt	Fair	Yes	None	N/A	Yes	0.0 None	None	36 inches to 60 inches	Greater than 80 inches	Greater than 0.50 inches	No	6.0 Greater than 2%	0.0	1.0	78	54
6403	0	12/9/2015	Wilkinson District 1	Carroll	Rte. 3	North	Unknown	Asphalt	Fair	Yes	Granite	Fair	No	4.0 Bicycle Lane	None	36 inches to 60 inches	Greater than 80 inches	Greater than 0.50 inches	No	3.0 Greater than 2%	8.0	1.0	78	54
6425	0	12/9/2015	Nichols district 1	Lancaster	Rte 3	East	Unknown	Asphalt	Fair	Yes	Granite	Fair	Yes	4.0 Bicycle Lane	None	36 inches to 60 inches	Greater than 80 inches	Greater than 0.50 inches	No	5.0 Greater than 2%	15.0	1.0	78	54
6508	0	12/14/2015	Patch district 1	Littleton	Rte 302	South	Unknown	Asphalt	Fair	Yes	Granite	Good	No	6.0 None	None	36 inches to 60 inches	Greater than 80 inches	Greater than 0.50 inches	No	5.0 Greater than 2%	0.0	1.0	78	54
6509	0	12/14/2015	Patch district 1	Littleton	Rte 302	South	Unknown	Asphalt	Fair	Yes	Granite	Good	No	6.0 Bicycle Lane	None	36 inches to 60 inches	Greater than 80 inches	Greater than 0.50 inches	No	4.0 Greater than 2%	1.0	1.0	78	54
6540	0	12/15/2015	Nichols district 1	Littleton	Rte 302	South	Unknown	Asphalt	Fair	Yes	Granite	Fair	No	6.0 Bicycle Lane	None	36 inches to 60 inches	Greater than 80 inches	Greater than 0.50 inches	No	7.0 Greater than 2%	11.0	1.0	78	54
6553	0	12/15/2015	Nichols district 1	Littleton	Rte 135	North-East	Unknown	Asphalt	Fair	Yes	Granite	Fair	No	6.0 Bicycle Lane	None	36 inches to 60 inches	Greater than 80 inches	Greater than 0.50 inches	No	3.0 Greater than 2%	1.0	1.0	78	54
6582	0	12/16/2015	Wilkinson District 1	Littleton	Cottage Street-Rtes. 302,18,116	West	Unknown	Asphalt	Fair	Yes	Granite	Fair	No	3.0 Bicycle Lane	None	36 inches to 60 inches	Greater than 80 inches	Greater than 0.50 inches	No	2.0 Greater than 2%	2.0	1.0	78	54
6754	0	12/31/2015	Nichols district 1	Woodsville	Rte 302	South	Unknown	Asphalt	Fair	Yes	Granite	Fair	No	3.0 Parking Spaces	None	36 inches to 60 inches	Greater than 80 inches	Greater than 0.50 inches	No	2.0 Greater than 2%	17.0	1.0	78	54
6779	0	1/6/2016	Melendy dist1	Woodstock	Rte 3	West	Unknown	Asphalt	Fair	Yes	Granite	Fair	No	4.0 Parking Spaces	None	36 inches to 60 inches	Greater than 80 inches	Greater than 0.50 inches	No	4.0 Greater than 2%	4.0	1.0	78	54
6801	0	1/7/2016	Wilkinson District 1	Woodstock	Rte 112	North	Unknown	Asphalt	Fair	Yes	Granite	Good	No	4.0 Bicycle Lane	None	36 inches to 60 inches	Greater than 80 inches	Greater than 0.50 inches	No	2.0 Greater than 2%	3.0	1.0	78	54
6803	0	1/7/2016	Wilkinson District 1	Woodstock	Rte 112	North	Unknown	Asphalt	Fair	Yes	None	N/A	No	0.0 Grass Strip	None	36 inches to 60 inches	Greater than 80 inches	Greater than 0.50 inches	No	7.0 Greater than 2%	0.0	1.0	78	54
7855	0	1/14/2016	Nichols district 1	North haverhill	Rte 10	East	Unknown	Asphalt	Fair	Yes	None	N/A	No	0.0 Grass Strip	None	36 inches to 60 inches	Greater than 80 inches	Greater than 0.50 inches	No	1.0 Greater than 2%	0.0	1.0	78	54
7921	0	1/28/2016	Nichols district 1	Franconia	Rte 142	North-West	Unknown	Asphalt	Fair	Yes	Granite	Fair	No	2.0 Bicycle Lane	None	36 inches to 60 inches	Greater than 80 inches	Greater than 0.50 inches	No	7.0 Greater than 2%	0.0	1.0	78	54
7924	0	1/28/2016	Nichols district 1	Franconia	Rte 18	North	Unknown	Asphalt	Fair	Yes	Granite	Poor	No	0.0 None	None	36 inches to 60 inches	Greater than 80 inches	Greater than 0.50 inches	No	1.0 Greater than 2%	6.0	1.0	78	54
7927	0	1/28/2016	Nichols district 1	Franconia	Rte 116	West	Unknown	Asphalt	Fair	Yes	Granite	Fair	No	4.0 Bicycle Lane	None	36 inches to 60 inches	Greater than 80 inches	Greater than 0.50 inches	No	3.0 Greater than 2%	3.0	1.0	78	54
7931	0	1/28/2016	Wilkinson District 1	Franconia	Rte. 18 and 116	North	Unknown	Asphalt	Fair	Yes	Granite	Good	No	4.0 Bicycle Lane	None	36 inches to 60 inches	Greater than 80 inches	Greater than 0.50 inches	No	1.0 Greater than 2%	2.0	1.0	78	54
7932	0	1/28/2016	Wilkinson District 1	Franconia	Wallace Hill road	West	Unknown	Asphalt	Fair	Yes	Granite	Good	No	6.0 None	None	36 inches to 60 inches	Greater than 80 inches	Greater than 0.50 inches	No	1.0 Greater than 2%	1.0	1.0	78	54
7933	0	1/28/2016	Wilkinson District 1	Franconia	Rte. 18 and 116	South	Unknown	Asphalt	Fair	Yes	Granite	Good	No	4.0 None	None	36 inches to 60 inches	Greater than 80 inches	Greater than 0.50 inches	No	1.0 Greater than 2%	2.0	1.0	78	54
7946	0	1/28/2016	Wilkinson District 1	Franconia	Rte. 116	East	Unknown	Asphalt	Fair	Yes	Granite	Fair	No	4.0 Bicycle Lane	None	36 inches to 60 inches	Greater than 80 inches	Greater than 0.50 inches	No	1.0 Greater than 2%	3.0	1.0	78	54
7947	0	1/28/2016	Wilkinson District 1	Franconia	Rte. 116	East	Unknown	Asphalt	Fair	Yes	Granite	Fair	No	4.0 Bicycle Lane	None	36 inches to 60 inches	Greater than 80 inches	Greater than 0.50 inches	No	3.0 Greater than 2%	1.0	1.0	78	54
8979	0	2/10/2016	Nichols district 1	Conway	Rte 16/113	North	Unknown	Asphalt	Fair	Yes	Granite	Fair	No	0.0 Bicycle Lane	None	36 inches to 60 inches	Greater than 80 inches	Greater than 0.50 inches	No	1.0 Greater than 2%	2.0	1.0	78	54
8980	0	2/10/2016	Nichols district 1	Conway	Rte 16/113	North	Unknown	Asphalt	Fair	Yes	Granite	Fair	No	0.0 Parking Spaces	None	36 inches to 60 inches	Greater than 80 inches	Greater than 0.50 inches	No	1.0 Greater than 2%	14.0	1.0	78	54
8981	0	2/10/2016	Nichols district 1	Conway	Rte 16/113	South	Unknown	Asphalt	Fair	Yes	Granite	Fair	No	0.0 Parking Spaces	None	36 inches to 60 inches	Greater than 80 inches	Greater than 0.50 inches	No	1.0 Greater than 2%	6.0	1.0	78	54
8983	0	2/10/2016	Nichols district 1	Conway	Rte 16/113	South	Unknown	Asphalt	Fair	Yes	Granite	Fair	No	0.0 Parking Spaces	None	36 inches to 60 inches	Greater than 80 inches	Greater than 0.50 inches	No	1.0 Greater than 2%	6.0	1.0	78	54
9004	0	2/22/2016	Wilkinson district 1	Conway	Rte 113	South	Unknown	Asphalt	Fair	Yes	Granite	Fair	No	6.0 None	None	36 inches to 60 inches	Greater than 80 inches	Greater than 0.50 inches	No	5.0 Greater than 2%	9.0	1.0	78	54
4458	0	12/10/2015	Sandt DOT	Laconia	Rt 3	North	Unknown	Concrete	Fair	Yes	Granite	Good	No	5.0 None	None	Greater than 60 inches	Unlimited	0.25 inches to 0.50 inches	Yes	1.0 Greater than 2%	0.0	1.0	77	55
4880	42693	10/23/2015	Sandt DOT	Newmarket	Exeter Road	East	Unknown	Concrete	Good	Yes	Granite	Good	No	5.0 None	None	36 inches to 60 inches	Unlimited	0.25 inches to 0.50 inches	Yes	5.0 Greater than 2%	17.0	1.0	77	55
6622	0	12/17/2015	Wilkinson District 1	Pike	Rte. 25	North-West	Unknown	Concrete	Fair	Yes	Granite	Good	No	7.0 Bicycle Lane	None	36 inches to 60 inches	Unlimited	0.25 inches to 0.50 inches	Yes	2.0 Less than or equal to 2%	1.0	1.0	77	55
5013	42908	10/27/2015	Wilkinson District 1	Colebrook	Rte. 3	Northwest	Unknown	Concrete	Poor	Yes	Granite	Fair	No	8.0 None	None	Greater than 60 inches	Greater than 80 inches	0.25 inches to 0.50 inches	No	2.0 Less than or equal to 2%	0.0	1.0	77	55
531	1097	6/24/2015	Sandt DOT	Hooksett	Daniel Webster Hwy	Southeast	Unknown	Asphalt	Good	Yes	Granite	Good	No	5.0 Grass Strip	None	36 inches to 60 inches	Less than 80in	Greater than 0.50 inches	No	3.0 Greater than 2%	0.0	1.0	77	55
4468	41471	9/4/2015	Sandt DOT	Marlborough	Rte 101	Southwest	Unknown	Asphalt	Good	Yes	Granite	Good	No	4.0 Parking Spaces	None	36 inches to 60 inches	Greater than 80 inches	Less than 0.25 inches	Yes	13.0 Greater than 2%	6.0	1.0	77	55
6417	0	12/9/2015	Sandt DOT	New London	Rte 114	South-West	Unknown	Asphalt	Good	Yes	Granite	Good	No	5.0 Parking Spaces	None	36 inches to 60 inches	Greater than 80 inches	Less than 0.25 inches	No	16.0 Greater than 2%	1.0	1.0	77	55
6592	0	12/16/2015	Wilkinson District 1	Littleton	Cottage Street-Rtes. 302,18,116	East	Unknown	Concrete	Good	No	Granite	Fair	No	5.0 None	Fixed Object	36 inches to 60 inches	Greater than 80 inches	Greater than 0.50 inches	Yes	5.0 Less than or equal to 2%	0.0	1.0	77	55
6442	0	12/10/2015	Wilkinson District 1	Bethlehem	Rte. 142	East	Unknown	Asphalt	Good	No	Asphalt	Fair	Yes	4.0 Bicycle Lane	Utility Pole	36 inches to 60 inches	Less than 80in	Level	Yes	12.0 Greater than 2%	15.0	1.0	77	55
4548	41521	9/17/2015	Sandt DOT	Newport	Rt 10	East	Unknown	Asphalt	Fair	Yes	Asphalt	Fair	No	3.0 None	None	Greater than 60 inches	Greater than 80 inches	0.25 inches to 0.50 inches	Yes	3.0 Greater than 2%	8.0	1.0	76	55
4549	41522	9/17/2015	Sandt DOT	Newport	Rt 10	East	Unknown	Asphalt	Fair	Yes	Asphalt	Fair	No	3.0 None	None	Greater than 60 inches	Greater than 80 inches	0.25 inches to 0.50 inches	Yes	3.0 Greater than 2%	3.0	1.0	76	55
6379	0	12/8/2015	Melendy District 1	Whitefield	Rte. 142	North	Unknown	Asphalt	Fair	Yes	Concrete	Good	No	4.0 Parking Spaces	Utility Pole	Greater than 60 inches	Greater than 80 inches	0.25 inches to 0.50 inches	Yes	2.0 Greater than 2%	2.0	1.0	76	55
6606	0	12/16/2015	Sandt DOT	Tilton	Rt 3	South	Unknown	Asphalt	Fair	Yes	Granite	Fair	No	3.0 Parking Spaces	None	Greater than 60 inches	Greater than 80 inches	0.25 inches to 0.50 inches	Yes	1.0 Greater than 2%	0.0	1.0	76	55
6608	0	12/16/2015	Sandt DOT	Tilton	Rt 3	North	Unknown	Asphalt	Fair	Yes	Granite	Fair	No	3.0 Parking Spaces	None	Greater than 60 inches	Greater than 80 inches	0.25 inches to 0.50 inches	Yes	1.0 Greater than 2%	0.0	1.0	76	55
6609	0	12/16/2015	Sandt DOT	Tilton	Rt 3	North	Unknown	Asphalt	Fair	Yes	Granite	Fair	No	3.0 Parking Spaces	None	Greater than 60 inches	Greater than 80 inches	0.25 inches to 0.50 inches	Yes	1.0 Greater than 2%	2.0	1.0	76	55
6616	0	12/16/2015	Wilkinson District 1	Littleton	Rte. 302	South	Unknown	Asphalt	Fair	Yes	Granite	Fair	No	5.0 None	Fixed Object	Greater than 60 inches	Greater than 80 inches	0.25 inches to 0.50 inches	No	8.0 Greater than 2%	0.0	1.0	76	55
712	2211	7/13/2015	Sandt DOT	Nashua	East Dunstable Road	Northwest	Unknown	Concrete	Good	Yes	Granite	Good	No	6.0 None	Utility Pole	36 inches to 60 inches	Greater than 80 inches	Less than 0.25 inches	No	2.0 Greater than 2%	3.0	1.0	76	55
847	3215	7/23/2015	Sandt DOT	Derry	E Broadway	Northwest	Unknown	Concrete	Stamped Asphalt	Good	Yes	Granite	Good	5.0 Parking Spaces	Utility Pole	36 inches to 60 inches	Greater than 80 inches	Level	No	2.0 Greater than 2%	0.0	1.0	76	55
848	3216	7/23/2015	Sandt DOT	Derry	E Broadway	Northwest	Unknown	Concrete	Stamped Asphalt	Good	Yes	Granite	Good	5.0 Parking Spaces	Utility Pole	36 inches to 60 inches	Greater than 80 inches	Level	No	2.0 Greater than 2%	0.0	1.0	76	55
4218	41187	8/4/2015	Sandt DOT	Hopkinton	Main Street	South	Unknown	Asphalt	Good	Yes	None	N/A	No	0.0 Grass Strip	None	36 inches to 60 inches	Greater than 80 inches	0.25 inches to 0.50 inches	Yes	7.0 Greater than 2%	0.0	1.0	76	55
4228	41197	8/5/2015	Sandt DOT	Boscawen	King Street	Northeast	Unknown	Asphalt	Fair	Yes	None	N/A	No	0.0 Grass Strip	None	36 inches to 60 inches	Greater than 80 inches	0.25 inches to 0.50 inches	Yes	1.0 Less than or equal to 2%	0.0	1.0	76	55
4393	41365	8/24/2015	Sandt DOT	Jaffrey	Main Street	South	Unknown	Asphalt	Fair	Yes	Granite	Good	No	4.0 Parking Spaces	None	36 inches to 60 inches	Greater than 80 inches	0.25 inches to 0.50 inches	Yes	4.0 Less than or equal to 2%	3.0	1.0	76	55
4396	41368	8/26/2015	Sandt DOT	Concord	South Street	Northeast	Unknown	Asphalt	Good	Yes	None	N/A	No	0.0 Grass Strip	None	36 inches to 60 inches	Greater than 80 inches	0.25 inches to 0.50 inches	Yes	1.0 Greater than 2%	0.0	1.0	76	55
4397	41369	8/26/2015	Sandt DOT	Concord	South Street	Northeast	Unknown	Asphalt	Good	Yes	None	N/A	No	0.0 Grass Strip	None	36 inches to 60 inches	Greater than 80 inches	0.25 inches to 0.50 inches	Yes	2.0 Greater than 2%	0.0	1.0	76	55
4413	41385	8/27/2015	Sandt DOT	Jaffrey	Rt 137	West	Unknown	Asphalt	Fair	Yes	Asphalt	Fair	No	4.0 None	None	36 inches to 60 inches	Greater than 80 inches	0.25 inches to 0.50 inches	Yes	3.0 Less than or equal to 2%	3.0	1.0	76	55
4618	41591	9/24/2015	Sandt DOT	Enfield	Shaker Hill Road	Northeast	Unknown	Asphalt	Stamped Asphalt	Good	Yes	Granite	Good	6.0 None	None	36 inches to 60 inches	Greater than 80 inches	Greater than 0.50 inches	No	2.0 Greater than 2%	1.0	1.0	76	55
4763	41736	10/7/2015	Sandt DOT	Newington	Gosling Road	South	Unknown	Asphalt	Fair	Yes	Granite	Good	No	5.0 Grass Strip	None	36 inches to 60 inches	Greater than 80 inches	0.25 inches to 0.50 inches	Yes	1.0 Less than or equal to 2%	0.0	1.0	76	55
4837	42650	10/19/2015	Sandt DOT	Concord	South Street	East	Unknown	Asphalt	Fair	Yes	Granite	Good	No	3.0 Grass Strip	None	36 inches to 60 inches	Greater than 80 inches	0.25 inches to 0.50 inches	Yes	1.0 Less than or equal to 2%	2.0	1.0	76	55
4838	42651	10/19/2015	Sandt DOT	Concord	South Street	East	Unknown	Asphalt	Fair	Yes	Granite	Good	No	5.0 Grass Strip	None	36 inches to 60 inches	Greater than 80 inches	0.25 inches to 0.50 inches	Yes	3.0 Less than or equal to 2%	3.0	1.0	76	55
5226	0	11/23/2015	Sandt DOT	Wolfeboro	Elm Street	West	Unknown	Asphalt	Fair	Yes	Granite	Fair	No	1.0 None	None	36 inches to 60 inches	Greater than 80 inches	0.25 inches to 0.50 inches	Yes	5.0 Less than or equal to 2%	5.0	1.0	76	55
5227	0	11/23/2015	Sandt DOT	Wolfeboro	Elm Street	West	Unknown	Asphalt	Fair	Yes	Granite	Fair	No	1.0 None	None	36 inches to 60 inches	Greater than 80 inches	0.25 inches to 0.50 inches	Yes	5.0 Less than or equal to 2%	0.0	1.0	76	55
6412	0	12/9/2015	Sandt DOT	New London	Rt 114	North-East	Unknown	Asphalt	Good	Yes	Granite	Good	No	3.0 None	Utility Pole	36 inches to 60 inches	Greater than 80 inches	0.25 inches to 0.50 inches	No	1.0 Greater than 2%	2.0	1.0	76	55
6413	0	12/9/2015	Sandt DOT	New London	Rt 114	North-East	Unknown	Asphalt	Good	Yes	Granite	Good	No	3.0 Parking Spaces	Utility Pole	36 inches to 60 inches	Greater than 80 inches	0.25 inches to 0.50 inches	No	1.0 Greater than 2%	5.0	1.0	76	55
6537	0	12/15/2015	Wilkinson District 1	Littleton	Rte. 116	South	Unknown	Asphalt	Fair	Yes	Granite	Fair	No	6.0 None	Fixed Object	36 inches to 60 inches	Greater than 80 inches	0.25 inches to 0.50 inches	No	2.0 Less than or equal to 2%	1.0	1.0	76	55
6638	0	12/17/2015	Nichols district 1	Lisbon	Rte 302	East	Unknown	Asphalt	Fair	Yes	Asphalt	Fair	No	5.0 Bicycle Lane	Utility Pole	36 inches to 60 inches	Greater than 80 inches	0.25 inches to 0.50 inches	No	1.0 Less than or equal to 2%	14.0	1.0	76	55
6639	0	12/17/2015	Nichols district 1	Lisbon	Rte 302	East	Unknown	Asphalt	Fair	Yes	Asphalt	Fair	No	4.0 Parking Spaces	Utility Pole	36 inches to 60 inches	Greater than 80 inches	0.25 inches to 0.50 inches	No	2.0 Less than or equal to 2%	2.0	1.0	76	55
6640	0	12/17/2015	Nichols district 1	Lisbon	Rte 302	East	Unknown	Asphalt	Fair	Yes	Asphalt	Fair	No	4.0 Parking Spaces	Utility Pole	36 inches to 60 inches	Greater than 80 inches	0.25 inches to 0.50 inches	No	1.0 Less than or equal to 2%	4.0	1.0	76	55
6641	0	12/17/2015	Nichols district 1	Lisbon	Rte 302	East	Unknown	Asphalt	Fair	Yes	Asphalt	Fair	No	3.0 Bicycle Lane	Utility Pole	36 inches to 60 inches	Greater than 80 inches	0.25 inches to 0.50 inches	No	1.0 Less than or equal to 2%	9.0	1.0	76	55
6659	0	12/18/2015	Sandt DOT	Center Harbor	Main Street	West	Unknown	Asphalt	Fair	Yes	None	Good	No	0.0 Grass Strip	None	36 inches to 60 inches	Greater than 80 inches	0.25 inches to 0.50 inches	Yes	1.0 Less than or equal to 2%	0.0	1.0	76	55
6717	0	12/16/2015	Sandt DOT	Tilton	Rt 3	North	Unknown	Asphalt	Fair	Yes	None	Good	No	0.0 Grass Strip	None	36 inches to 60 inches	Greater than 80 inches	0.25 inches to 0.50 inches	Yes	2.0 Less than or equal to 2%	0.0	1.0	76	55
6800	0	1/7/2016	Wilkinson District 1	Woodstock	Rte 112	North	Unknown	Asphalt	Good	Yes	Granite	Good	No	5.0 Bicycle Lane	Fixed Object	36 inches to 60 inches	Greater than 80 inches	0.25 inches to 0.50 inches	No	6.0 Greater than 2%	7.0	1.0	76	55
6828	0	1/11/2016	Sandt DOT	Meredith	Rt 3	East	Unknown	Asphalt	Fair	Yes	Granite	Good	No	2.0 None	None	36 inches to 60 inches	Greater than 80 inches	0.25 inches to 0.50 inches	Yes	4.0 Less than or equal to 2%	0.0	1.0	76	55
6833	0	1/11/2016	Sandt DOT	Meredith	Rt 3	East	Unknown	Asphalt	Fair	Yes	Granite	Good	No	2.0 None	None	36 inches to 60 inches	Greater than 80 inches	0.25 inches to 0.50 inches	Yes	4.0 Less than or equal to 2%	0.0	1.0	76	55
6834	0	1/11/2016	Sandt DOT	Meredith	Rt 3	East	Unknown	Asphalt	Fair	Yes	Granite	Good	No	1.0 None	None	36 inches to 60 inches	Greater than 80 inches	0.25 inches to 0.50 inches	Yes	4.0 Less than or equal to 2%	1.0	1.0	76	55
6835	0	1/11/2016	Sandt DOT	Meredith	Rt 3	East	Unknown	Asphalt	Fair	Yes	Granite	Good	No	1.0 None	None	36 inches to 60 inches	Greater than 80 inches	0.25 inches to 0.50 inches	Yes	6.0 Less than or equal to 2%	3.0	1.0	76	55
6845	0	1/11/2016	Wilkinson District 1	Lincoln	Rte 112	North-West	Unknown	Asphalt	Fair	Yes	None	N/A	No	0.0 Grass Strip	None	36 inches to 60 inches	Greater than 80 inches	0.25 inches to 0.50 inches	Yes	3.0 Less than or equal to 2%	0.0	1.0	76	55
4557	41530	9/17/2015	Sandt DOT	Newport	Rt 10	West	Unknown	Asphalt	Fair	Yes	None	N/A	No	0.0 Parking Spaces	None	Greater than 60 inches	Unlimited	Greater than 0.50 inches	Yes	3.0 Less than or equal to 2%	0.0	1.0	75	56
4559	41532	9/17/2015	Sandt DOT	Newport	Rt 10	West	Unknown	Asphalt	Fair	Yes	None	N/A	No	0.0 Parking Spaces	None	Greater than 60 inches	Unlimited	Greater than 0.50 inches	Yes	3.0 Less than or equal to 2%	0.0	1.0	75	56
10143	0	3/31/2016	Sandt DOT	Bow	I89	South	Unknown	Asphalt	Good	Yes	Granite	Fair	No	1.00000000000 Grass Strip	None	Greater than 60 inches	Unlimited	Greater than 0.50 inches	Yes	2.0 Greater than 2%	0.0	1.0	75	56
895	3263	7/30/2015	Sandt DOT	Bedford	101	Northwest	Unknown	Asphalt	Good	Yes	Granite	Good	No	5.0 None	None	36 inches to 60 inches	Unlimited	Greater than 0.50 inches	Yes	0.0 Less than or equal to 2%	0.0	1.0	75	56
4587	41560	9/22/2015	Sandt DOT	Epping	Beede Hill Road	West	Unknown	Asphalt	Good	Yes	Granite	Good	No	6.0 None	None	36 inches to 60 inches	Unlimited	Greater than 0.50 inches	Yes	4.0 Less than or equal to 2%	0.0	1.0	75	56
4

6391	0	12/9/2015 Sandt DOT	Mont Vernon	Rte 13	East	Unknown	Asphalt	Fair	Yes	Granite	Good	No	5.0 None	None	36 inches to 60 inches	Greater than 80 inches	Less than 0.25 inches	Yes	8.0 Less than or equal to 2%	1.0	1.0	72	58
6423	0	12/9/2015 Nichols district 1	Lancaster	Rte 2 and Rte 3	West	Unknown	Concrete	Fair	Yes	Granite	Poor	No	1.0 Grass Strip	None	36 inches to 60 inches	Greater than 80 inches	Greater than 0.50 inches	No	1.0 Less than or equal to 2%	11.0	1.0	72	58
6424	0	12/9/2015 Nichols district 1	Lancaster	Rte 2	South	Unknown	Concrete	Fair	Yes	None	Poor	No	0.0 Grass Strip	None	36 inches to 60 inches	Greater than 80 inches	Greater than 0.50 inches	No	4.0 Less than or equal to 2%	0.0	1.0	72	58
6482	0	12/14/2015 Sandt DOT	Bristol	Rt 104	South	Unknown	Asphalt	Good	Yes	Granite	Good	No	5.0 Grass Strip	None	36 inches to 60 inches	Greater than 80 inches	Less than 0.25 inches	Yes	5.0 Greater than 2%	1.0	1.0	72	58
6483	0	12/14/2015 Sandt DOT	Bristol	Rt 104	South	Unknown	Asphalt	Good	Yes	Granite	Good	No	5.0 Grass Strip	None	36 inches to 60 inches	Greater than 80 inches	Less than 0.25 inches	Yes	3.0 Greater than 2%	1.0	1.0	72	58
6488	0	12/14/2015 Sandt DOT	Bristol	Rt 104	South	Unknown	Asphalt	Good	Yes	Granite	Good	No	5.0 None	None	36 inches to 60 inches	Greater than 80 inches	Less than 0.25 inches	Yes	3.0 Greater than 2%	6.0	1.0	72	58
6497	0	12/14/2015 Sandt DOT	Tilton	Rt 3	East	Unknown	Asphalt	Fair	Yes	None	N/A	No	0.0 Grass Strip	None	36 inches to 60 inches	Greater than 80 inches	Less than 0.25 inches	Yes	5.0 Less than or equal to 2%	0.0	1.0	72	58
6568	0	12/15/2015 Sandt DOT	Tilton	Rt 3	North-West	Unknown	Asphalt	Fair	Yes	Asphalt	Fair	No	4.0 None	None	36 inches to 60 inches	Greater than 80 inches	Less than 0.25 inches	Yes	1.0 Less than or equal to 2%	2.0	1.0	72	58
6569	0	12/15/2015 Sandt DOT	Tilton	Rt 3	North-West	Unknown	Asphalt	Fair	Yes	Asphalt	Fair	No	5.0 None	None	36 inches to 60 inches	Greater than 80 inches	Less than 0.25 inches	Yes	2.0 Less than or equal to 2%	1.0	1.0	72	58
6570	0	12/15/2015 Sandt DOT	Tilton	Rt 3	North-West	Unknown	Asphalt	Fair	Yes	Asphalt	Fair	No	5.0 None	None	36 inches to 60 inches	Greater than 80 inches	Less than 0.25 inches	Yes	4.0 Less than or equal to 2%	3.0	1.0	72	58
6604	0	12/16/2015 Sandt DOT	Northfield	Rt 132	East	Unknown	Asphalt	Fair	Yes	Granite	Fair	No	3.0 None	None	36 inches to 60 inches	Greater than 80 inches	Less than 0.25 inches	Yes	7.0 Less than or equal to 2%	2.0	1.0	72	58
6611	0	12/16/2015 Sandt DOT	Tilton	Winter Street	North	Unknown	Asphalt	Good	Yes	None	Fair	No	0.0 None	Utility Pole	36 inches to 60 inches	Greater than 80 inches	Less than 0.25 inches	No	7.0 Greater than 2%	0.0	1.0	72	58
6612	0	12/16/2015 Sandt DOT	Tilton	Winter Street	North	Unknown	Asphalt	Good	Yes	None	Fair	No	0.0 Utility Pole	None	36 inches to 60 inches	Greater than 80 inches	Less than 0.25 inches	No	7.0 Greater than 2%	0.0	1.0	72	58
6702	0	12/23/2015 Sandt DOT	Andover	Rt 4	North	Unknown	Asphalt	Fair	Yes	Granite	Good	No	6.0 Grass Strip	None	36 inches to 60 inches	Greater than 80 inches	Less than 0.25 inches	Yes	1.0 Less than or equal to 2%	1.0	1.0	72	58
6715	0	12/16/2015 Sandt DOT	Tilton	Rt 3	South	Unknown	Asphalt	Fair	Yes	None	Good	No	0.0 Grass Strip	None	36 inches to 60 inches	Greater than 80 inches	Less than 0.25 inches	Yes	3.0 Less than or equal to 2%	0.0	1.0	72	58
6808	0	1/7/2016 Sandt DOT	New London	Rt 114	North-East	Unknown	Asphalt	Good	Yes	Granite	Good	No	6.0 None	Utility Pole	36 inches to 60 inches	Greater than 80 inches	Less than 0.25 inches	Yes	3.0 Greater than 2%	3.0	1.0	72	58
7911	0	1/27/2016 Nichols district 1	Conway	Rte 302/16	East	Unknown	Concrete	Fair	Yes	Granite	Fair	No	6.0 Bicycle Lane	None	36 inches to 60 inches	Greater than 80 inches	Greater than 0.50 inches	No	1.0 Less than or equal to 2%	0.0	1.0	72	58
4233	41202	8/6/2015 Sandt DOT	Concord	I93 slip road	South	Unknown	Asphalt	Good	Yes	Granite	Good	No	5.0 None	Vegetation	36 inches to 60 inches	Unlimited	Greater than 0.50 inches	No	3.0 Less than or equal to 2%	0.0	1.0	71	58
4630	41603	9/25/2015 Sandt DOT	Brentwood	North Road	Northwest	Unknown	Asphalt	Good	Yes	Granite	Good	No	5.0 None	Vegetation	36 inches to 60 inches	Unlimited	Level	No	7.0 Less than or equal to 2%	0.0	1.0	71	58
4849	42662	10/20/2015 Sandt DOT	Newfields	College Road	Southwest	Unknown	Asphalt	Good	No	Granite	Good	No	7.0 None	Vegetation	36 inches to 60 inches	Unlimited	Greater than 0.50 inches	No	11.0 Less than or equal to 2%	1.0	1.0	71	58
5115	0	11/10/2015 NM SWRPC	Hinsdale	Canal St	North	Town/City	Asphalt	Poor	Yes	Concrete	Poor	No	0.0 None	None	Greater than 60 inches	Greater than 80 inches	0.25 inches to 0.50 inches	No	1.0 Greater than 2%	12.0	1.0	71	58
844	3212	7/23/2015 Sandt DOT	Derry	W Broadway	Northwest	Unknown	Stamped Asphalt	Good	No	Granite	Good	No	3.0 Parking Spaces	Utility Pole	36 inches to 60 inches	Greater than 80 inches	Level	No	0.0 Greater than 2%	2.0	1.0	71	58
845	3213	7/23/2015 Sandt DOT	Derry	W Broadway	Northwest	Unknown	Stamped Asphalt	Good	No	Granite	Good	No	3.0 None	Utility Pole	36 inches to 60 inches	Greater than 80 inches	Level	Yes	2.0 Greater than 2%	1.0	1.0	71	58
4858	42671	10/21/2015 Wilkinson dist1	Clarksville	Rt 145	West	Unknown	10/21/2015 Asphalt	Poor	Yes	Granite	Fair	No	6.0 None	None	Greater than 60 inches	Unlimited	Greater than 0.50 inches	No	5.4 Less than or equal to 2%	0.0	1.0	70	59
643	2142	7/2/2015 Sandt DOT	Manchester	Hanover Street	North	Unknown	Asphalt	Poor	No	Granite	Good	No	6.0 None	Hydrant	less than 36 inches	Unlimited	Level	No	0.0 Less than or equal to 2%	2.0	1.0	70	59
827	3195	7/22/2015 Sandt DOT	Londonderry	Nashua Road	North	Unknown	Asphalt	Good	Yes	Granite	Good	No	6.0 None	None	36 inches to 60 inches	Unlimited	Level	No	17.0 Greater than 2%	0.0	1.0	70	59
857	3225	7/23/2015 Sandt DOT	Derry	E Broadway	Southeast	Unknown	Asphalt	Good	Yes	Granite	Good	No	5.0 None	None	36 inches to 60 inches	Unlimited	Level	No	16.0 Greater than 2%	3.0	1.0	70	59
4452	41425	9/1/2015 Sandt DOT	Boscawen	Harris Hill Road	West	Unknown	Asphalt	Good	Yes	Granite	Good	No	1.0 None	None	36 inches to 60 inches	Unlimited	Level	No	9.0 Greater than 2%	6.0	1.0	70	59
4899	42712	10/26/2015 Sandt DOT	North Hampton	Ocean Blvd	West	Unknown	Concrete	Poor	No	None	N/A	No	0.0 Grass Strip	Vegetation	less than 36 inches	Unlimited	Level	No	5.0 Less than or equal to 2%	0.0	1.0	70	59
6251	0	12/3/2015 Sandt DOT	Holderness	Bridge Street	North	Unknown	Concrete	Good	Yes	Granite	Good	No	6.0 None	None	Greater than 60 inches	Greater than 80 inches	0.25 inches to 0.50 inches	Yes	2.0 Greater than 2%	0.0	1.0	70	59
4467	41440	9/2/2015 Sandt DOT	Winchester	Rt 10	East	Unknown	Concrete	Good	Yes	None	N/A	No	0.0 None	None	36 inches to 60 inches	Greater than 80 inches	0.25 inches to 0.50 inches	Yes	1.0 Less than or equal to 2%	0.0	1.0	70	59
6361	0	12/8/2015 Nichols district 1	Lancaster	Rte 2 and Rte 3	East	Unknown	Concrete	Fair	Yes	Granite	Poor	No	3.0 Grass Strip	None	36 inches to 60 inches	Greater than 80 inches	0.25 inches to 0.50 inches	No	0.5 Greater than 2%	2.0	1.0	70	59
6422	0	12/9/2015 Nichols district 1	Lancaster	Rte 2 and Rte 3	West	Unknown	Concrete	Fair	Yes	Granite	Fair	No	3.0 Parking Spaces	None	36 inches to 60 inches	Greater than 80 inches	0.25 inches to 0.50 inches	No	1.0 Greater than 2%	4.0	1.0	70	59
7900	0	1/27/2016 Wilkinson District 1	Conway	Rte. 16 and 302	South-West	Unknown	Concrete	Fair	Yes	Granite	Good	No	6.0 Bicycle Lane	None	36 inches to 60 inches	Greater than 80 inches	0.25 inches to 0.50 inches	No	1.0 Greater than 2%	4.0	1.0	70	59
7901	0	1/27/2016 Wilkinson District 1	Conway	Rte. 16 and 302	South-West	Unknown	Concrete	Fair	Yes	Granite	Good	No	6.0 Bicycle Lane	None	36 inches to 60 inches	Greater than 80 inches	0.25 inches to 0.50 inches	No	3.0 Greater than 2%	9.0	1.0	70	59
7902	0	1/26/2016 Nichols district 1	Conway	Rte 302/16	East	Unknown	Concrete	Fair	Yes	Granite	Fair	No	3.0 Bicycle Lane	None	36 inches to 60 inches	Greater than 80 inches	0.25 inches to 0.50 inches	No	1.0 Greater than 2%	4.0	1.0	70	59
7904	0	1/27/2016 Nichols district 1	Conway	Rte 302/16	East	Unknown	Concrete	Fair	Yes	None	N/A	No	0.0 Bicycle Lane	None	36 inches to 60 inches	Greater than 80 inches	0.25 inches to 0.50 inches	No	0.0 Greater than 2%	0.0	1.0	70	59
7905	0	1/27/2016 Nichols district 1	Conway	Rte 302/16	East	Unknown	Concrete	Fair	Yes	Granite	Fair	No	5.0 Bicycle Lane	None	36 inches to 60 inches	Greater than 80 inches	0.25 inches to 0.50 inches	No	1.0 Greater than 2%	6.0	1.0	70	59
7906	0	1/27/2016 Nichols district 1	Conway	Rte 302/16	East	Unknown	Concrete	Fair	Yes	None	N/A	No	0.0 Bicycle Lane	None	36 inches to 60 inches	Greater than 80 inches	0.25 inches to 0.50 inches	No	2.0 Greater than 2%	0.0	1.0	70	59
7908	0	1/27/2016 Nichols district 1	Conway	Rte 302/16	East	Unknown	Concrete	Fair	Yes	Granite	Fair	No	6.0 Bicycle Lane	None	36 inches to 60 inches	Greater than 80 inches	0.25 inches to 0.50 inches	No	1.0 Greater than 2%	7.0	1.0	70	59
7912	0	1/27/2016 Wilkinson District 1	Conway	Rte. 16 and 302	South-West	Unknown	Concrete	Fair	Yes	Granite	Good	No	6.0 Bicycle Lane	None	36 inches to 60 inches	Greater than 80 inches	0.25 inches to 0.50 inches	No	2.0 Greater than 2%	14.0	1.0	70	59
7963	0	2/2/2016 Wilkinson District 1	Conway	Rte. 16 and 302	South-West	Unknown	Concrete	Fair	Yes	Granite	Good	No	6.0 Bicycle Lane	None	36 inches to 60 inches	Greater than 80 inches	0.25 inches to 0.50 inches	No	3.0 Greater than 2%	12.0	1.0	70	59
5040	42935	10/29/2015 Sandt DOT	Hampton	Ocean Blvd	W	Unknown	Concrete	Fair	Yes	Granite	Good	No	3.0 None	None	Greater than 60 inches	Unlimited	Level	Yes	1.0 Greater than 2%	1.0	1.0	69	59
697	2196	7/10/2015 Sandt DOT	Merrimack	Daniel Webster Hwy	West	Unknown	Asphalt	Fair	Yes	Granite	Good	No	3.0 None	Vegetation	36 inches to 60 inches	Unlimited	0.25 inches to 0.50 inches	No	2.0 Less than or equal to 2%	0.0	1.0	69	59
4250	41219	8/7/2015 Sandt DOT	Goffstown	Mast Street	North	Unknown	Asphalt	Good	Yes	Asphalt	Poor	No	2.0 Grass Strip	None	36 inches to 60 inches	Unlimited	Less than 0.25 inches	Yes	4.0 Greater than 2%	0.0	1.0	69	59
4419	41391	8/27/2015 Sandt DOT	Jaffrey	Stratton Road	East	Unknown	Asphalt	Fair	Yes	Granite	Good	No	2.0 None	None	36 inches to 60 inches	Unlimited	Less than 0.25 inches	Yes	3.0 Less than or equal to 2%	1.0	1.0	69	59
4421	41393	8/27/2015 Sandt DOT	Jaffrey	General White Highway	Southeast	Unknown	Concrete	Good	Yes	Granite	Good	No	3.0 None	None	36 inches to 60 inches	Unlimited	Level	Yes	1.0 Greater than 2%	0.0	1.0	69	59
4576	41549	9/21/2015 Sandt DOT	Lebanon	Lebanon Rest Area	Northwest	Unknown	Asphalt	Good	Yes	Granite	Good	No	4.0 Parking Spaces	None	36 inches to 60 inches	Unlimited	Less than 0.25 inches	Yes	1.0 Greater than 2%	0.0	1.0	69	59
4577	41550	9/21/2015 Sandt DOT	Lebanon	Lebanon Rest Area	Northwest	Unknown	Asphalt	Good	Yes	Granite	Good	No	4.0 Parking Spaces	None	36 inches to 60 inches	Unlimited	Less than 0.25 inches	Yes	1.0 Greater than 2%	0.0	1.0	69	59
4726	41699	10/5/2015 Sandt DOT	Rollinsford	Main Street	South	Unknown	Asphalt	Fair	Yes	None	N/A	No	0.0 None	None	36 inches to 60 inches	Unlimited	Less than 0.25 inches	Yes	1.0 Less than or equal to 2%	0.0	1.0	69	59
5063	42958	11/2/2015 Sandt DOT	Hampton	Ocean Blvd	East	Unknown	Asphalt	Fair	Yes	None	N/A	No	0.0 Grass Strip	None	36 inches to 60 inches	Unlimited	Less than 0.25 inches	Yes	1.0 Less than or equal to 2%	0.0	1.0	69	59
5064	42959	11/2/2015 Sandt DOT	Hampton	Ocean Blvd	East	Unknown	Asphalt	Fair	Yes	None	N/A	No	0.0 Grass Strip	None	36 inches to 60 inches	Unlimited	Less than 0.25 inches	Yes	1.0 Less than or equal to 2%	0.0	1.0	69	59
5067	42962	11/2/2015 Sandt DOT	Hampton	Ocean Blvd	East	Unknown	Concrete	Good	Yes	Granite	Good	No	2.0 Grass Strip	None	36 inches to 60 inches	Unlimited	Level	Yes	1.0 Greater than 2%	2.0	1.0	69	59
5068	42963	11/2/2015 Sandt DOT	Hampton	Ocean Blvd	East	Unknown	Concrete	Good	Yes	Granite	Good	No	1.0 Grass Strip	None	36 inches to 60 inches	Unlimited	Level	Yes	1.0 Greater than 2%	2.0	1.0	69	59
6663	0	12/18/2015 Sandt DOT	Meredith	Rt 25	North-West	Unknown	Asphalt	Good	Yes	Granite	Good	No	5.0 None	None	36 inches to 60 inches	Unlimited	Less than 0.25 inches	Yes	4.0 Greater than 2%	3.0	1.0	69	59
9022	0	3/7/2016 Sandt DOT	Swanzey	Rt 12	West	Unknown	Asphalt	Good	Yes	Granite	Good	No	1.0 None	None	36 inches to 60 inches	Unlimited	Less than 0.25 inches	Yes	5.0 Greater than 2%	4.0	1.0	69	59
9026	0	3/7/2016 Sandt DOT	Swanzey	Rt 12	West	Unknown	Asphalt	Good	Yes	Granite	Good	No	4.0 None	None	36 inches to 60 inches	Unlimited	Less than 0.25 inches	Yes	4.0 Greater than 2%	1.0	1.0	69	59
9086	0	3/16/2016 Sandt DOT	Plaistow	Rt 125	East	Unknown	Asphalt	Good	Yes	Granite	Good	No	5.00000000000 None	None	36 inches to 60 inches	Unlimited	Less than 0.25 inches	Yes	4.0 Greater than 2%	12.0	1.0	69	59
9088	0	3/16/2016 Sandt DOT	Plaistow	Rt 125	East	Unknown	Asphalt	Good	Yes	Granite	Good	No	6.00000000000 None	None	36 inches to 60 inches	Unlimited	Less than 0.25 inches	Yes	6.0 Greater than 2%	0.0	1.0	69	59
604	2103	6/26/2015 MC SWRPC	North Walpole	Birch Street	West	Unknown	Concrete	Fair	No	None	N/A	No	0.5 None	None	less than 36 inches	Less than 80in	0.25 inches to 0.50 inches	No	6.3 Greater than 2%	4.0	1.0	69	59
4196	34724	7/31/2015 Sandt DOT	Warner	W Main Street	South	Unknown	Brick	Brick	No	Granite	Good	No	3.0 Grass Strip	None	36 inches to 60 inches	Less than 80in	Level	No	15.0 Greater than 2%	5.0	1.0	69	59
6214	0	12/1/2015 Wilkinson District 1	Errol	Rte. 26 and 16	North	Unknown	Asphalt	Fair	No	Granite	Fair	No	3.0 Bicycle Lane	Vegetation	36 inches to 60 inches	Greater than 80 inches	Greater than 0.50 inches	No	2.0 Greater than 2%	4.0	1.0	69	59
523	1088	6/23/2015 MC SWRPC	North Walpole	Center Street	West	Unknown	Concrete	Poor	Yes	None	N/A	No	0.0 None	None	36 inches to 60 inches	Unlimited	Less than 0.25 inches	Yes	2.0 Less than or equal to 2%	4.0	1.0	68	60
605	2104	6/26/2015 MC SWRPC	North Walpole	Capron Street	North	Unknown	Concrete	Poor	No	None	N/A	No	0.5 None	None	less than 36 inches	Unlimited	Less than 0.25 inches	No	1.0 Greater than 2%	2.0	1.0	68	60
4211	41180	7/31/2015 Sandt DOT	Henniker	Bridge Street	East	Unknown	Concrete	Good	Yes	Granite	Good	No	5.0 None	None	36 inches to 60 inches	Unlimited	Less than 0.25 inches	No	9.0 Less than or equal to 2%	1.0	1.0	68	60
5112	0	11/10/2015 NM SWRPC	Hinsdale	Main St	South	Unknown	Asphalt	Poor	Yes	None	N/A	No	0.0 None	None	36 inches to 60 inches	Unlimited	0.25 inches to 0.50 inches	No	1.0 Less than or equal to 2%	0.0	1.0	68	60
8999	0	2/22/2016 Sandt DOT	Laconia	Rt 3	South-West	Unknown	Asphalt	Good	Yes	Granite	Good	No	5.0 None	None	36 inches to 60 inches	Unlimited	0.25 inches to 0.50 inches	No	24.0 Less than or equal to 2%	2.0	1.0	68	60
9089	0	3/17/2016 Nichols district 1	Franconia notch	Cannon	North	Unknown	Asphalt	Fair	Yes	Granite	Fair	No	3.00000000000 Bicycle Lane	None	Greater than 60 inches	Greater than 80 inches	Greater than 0.50 inches	No	1.0 Greater than 2%	3.0	1.0	68	60
10140	0	3/31/2016 Sandt DOT	Bow	I89	South	Unknown	Asphalt	Fair	Yes	None	Fair	No	0.00000000000 Grass Strip	None	Greater than 60 inches	Greater than 80 inches	Greater than 0.50 inches	No	1.0 Greater than 2%	0.0	1.0	68	60
494	1058	6/17/2015 Sandt DOT	Suncook	Main	East	Unknown	Asphalt	Good	No	Granite	Good	No	6.0 Parking Spaces	None	36 inches to 60 inches	Greater than 80 inches	Greater than 0.50 inches	No	8.5 Greater than 2%	0.0	1.0	68	60
508	1072	6/22/2015 Sandt DOT	Hooksett	Main	Northeast	Unknown	Asphalt	Fair	Yes	Granite	Good	No	3.0 Grass Strip	None	36 inches to 60 inches	Greater than 80 inches	0.25 inches to 0.50 inches	No	2.0 Less than or equal to 2%	3.0	1.0	68	60
538	1104	6/24/2015 Sandt DOT	Hooksett	Daniel Webster Hwy	Northwest	Unknown	Asphalt	Fair	Yes	Granite	Good	No	5.0 Grass Strip	None	36 inches to 60 inches	Greater than 80 inches	Greater than 0.50 inches	No	3.0 Less than or equal to 2%	0.0	1.0	68	60
547	2046	6/25/2015 Sandt DOT	Hooksett	Mammoth	East	Unknown	Asphalt	Good	No	Granite	Good	No	4.0 Grass Strip	None	36 inches to 60 inches	Greater than 80 inches	Greater than 0.50 inches	No	12.0 Greater than 2%	3.0	1.0	68	60
855	3223	7/23/2015 Sandt DOT	Derry	E Broadway	Northwest	Unknown	Asphalt	Good	Yes	Granite	Good	No	3.0 Grass Strip	None	36 inches to 60 inches	Greater than 80 inches	Level	Yes	2.0 Greater than 2%	13.0	1.0	68	60
4582	41555	9/21/2015 Sandt DOT	Hanover	Rt 10	West	Unknown	Asphalt	Fair	Yes	Asphalt	Good	No	6.0 Grass Strip	None	36 inches to 60 inches	Greater than 80 inches	Level	Yes	2.0 Less than or equal to 2%	0.0	1.0	68	60
4700	41673	10/2/2015 Sandt DOT	Rochester	N Main St	South	Unknown	Asphalt	Fair	Yes	Asphalt	Fair	No	1.0 Grass Strip	None	36 inches to 60 inches	Greater than 80 inches	Greater than 0.50 inches	No	1.0 Less than or equal to 2%	0.0	1.0	68	60
4887	42700	10/23/2015 Sandt DOT	Newmarket	Main Street	North	Unknown	Asphalt	Good	Yes	Granite	Good	No	6.0 None	None	36 inches to 60 inches	Greater than 80 inches	Level	Yes	6.0 Greater than 2%	10.0	1.0	68	60
4992	42807	11/2/2015 Melendy district one	Colebrook	Rte26	North	Unknown	Asphalt	Fair	Yes	Granite	Fair	No	4.0 Parking Spaces	None	36 inches to 60 inches	Greater than 80 inches	Greater than 0.50 inches	No	4.0 Less than or equal to 2%	3.0	1.0	68	60
5134	0	11/16/2015 Wilkinson District 1	North Stratford	Rte. 3	South-East	Unknown	Asphalt	Good	No	Granite	Good	No	2.0 Bicycle Lane	None	36 inches to 60 inches	Greater than 80 inches	Greater than 0.50 inches	No	9.0 Greater than 2%	6.0	1.0	68	60
5151	0	11/18/2015 Sandt DOT	Tuftonboro	Rt 109	West	Unknown	Asphalt	Good	Yes	Granite	Good	No	6.0 None	None	36 inches to 60 inches	Greater than 80 inches	Greater than 0.50 inches	No	2.0 Greater than 2%	1.0	1.0	68	60
5163	0	11/19/2015 Wilkinson District 1	Gorham	Rte. 2	South	Unknown	Asphalt	Good	Yes	Granite	Good	No	4.0 Parking Spaces	None	36 inches to 60 inches	Greater than 80 inches	Greater than 0.50 inches	No	5.0 Greater than 2%	1.0	1.0	68	60
5185	0	11/5/2015 Sandt DOT	Hampton Falls	84	North	Unknown	Asphalt	Fair	Yes	Granite	Good	No	3.0 None	None	36 inches to 60 inches	Greater than 80 inches	Greater than 0.50 inches	No	7.0 Less than or equal to 2%	0.0	1.0	68	60
5220	0	11/19/2015 Nichols district 1	Gorham	Rte 2 and rte 16	South	Unknown	Asphalt	Poor	No	Granite	Fair	No	6.0 Parking Spaces	None	36 inches to 60 inches	Greater than 80 inches	Greater than 0.50 inches	No	5.0 Greater than 2%	2.0	1.0	68	60
6185	0	11/30/2015 Nichols district 1	Gorham	Rte 2	North	Unknown	Asphalt	Fair	Yes	Granite	Fair	No	5.0 None	None	36 inches to 60 inches	Greater than 80 inches	0.25 inches to 0.50 inches	Yes	2.5 Less than or equal to 2%	3.0	1.0	68	60
6402	0	12/9/2015 Wilkinson District 1	Carroll	Rte. 3	West	Unknown	Asphalt	Fair	Yes	Granite	Fair	No	4.0 Bicycle Lane	None	36 inches to 60 inches	Greater than 80 inches	Greater than 0.50 inches	No	2.0 Less than or equal to 2%	1.0	1.0	68	60
6445	0	12/10/2015 Wilkinson District 1	Bethlehem	Rte. 142	West	Unknown	Asphalt	Fair	Yes	None	N/A	No	0.5 Grass Strip	None	36 inches to 60 inches	Greater than 80 inches	Greater than 0.50 inches	No	6.0 Less than or equal to 2%	0.0	1.0	68	60
6472	0	12/14/2015 Sandt DOT	Bristol	3A	East	Unknown	Asphalt	Good	Yes	Granite	Good	No	5.0 None	None	36 inches to 60 inches	Unlimited	Level	Yes	2.0 Greater than 2%	6.0	1.0	68	60
6474	0	12/14/2015 Sandt DOT	Bristol	Bristol	East	Unknown	Asphalt	Good	Yes	Granite	Good	No	5.0 None	None	36 inches to 60 inches	Greater than 80 inches	Level	Yes	2.0 Greater than 2%	0.0	1.0	68	60
6475	0	12/14/2015 Sandt DOT	Bristol	3A	East	Unknown	Asphalt	Good	Yes	Granite	Good	No	5.0 None	None	36 inches to 60 inches	Greater than 80 inches	Level	Yes	1.0 Greater than 2%	0.0	1.0	68	60
6579	0	12/16/2015 Wilkinson District 1	Littleton-Rtes. 302,18,116	Cottage Street	West	Unknown	Asphalt	Fair	Yes	Granite	Fair	No	5.0 None	None	36 inches to 60 inches	Greater than 80 inches	Greater than 0.50 inches	No	5.0 Less than or equal to 2%	2.0	1.0	68	60
6734	0	12/28/2015 Sandt DOT	Meredith	Rt 3	East	Unknown	Asphalt	Good	Yes	Granite	Fair	No	4.0 Grass Strip	None	36 inches to 60 inches	Greater than 80 inches	Level	Yes	1.0 Greater than 2%	2.0	1.0	68	60
6774	0	1/5/2016 Sandt DOT	Belmont	Rt 140	South	Unknown	Asphalt	Good	Yes	Granite	Good	No	5.0 None	None	36 inches to 60 inches	Greater than 80 inches	Level	Yes	7.0 Greater than 2%	5.0	1.0	68	60
6778	0	1/6/2016 Melendy dist1	Woodstock	Rte 3	West	Unknown	Asphalt	Fair	Yes	Granite	Fair	No	2.0 Bicycle Lane	None	36 inches to 60 inches	Greater than 80 inches	Greater than 0.50 inches	No	2.0 Less than or equal to 2%	2.0	1.0	68	60
6804	0	1/7/2016 Wilkinson District 1	Woodstock	Rte 112	North	Unknown	Asphalt	Fair	Yes	None	N/A	No	0.0 Grass Strip	None	36 inches to 60 inches	Greater than 80 inches	Greater than 0.50 inches	No	8.0 Less than or equal to 2%	0.0	1.0	68	60
6814	0	1/8/2016 Sandt DOT	New London	Newport Road	North	Unknown	Asphalt	Good	Yes	Granite	Good	No	6.0 None	None	36 inches to 60 inches	Greater than 80 inches	Level	Yes	2.0 Greater than 2%	0.0	1.0	68	60
6815	0	1/8/2016 Sandt DOT	New London	Newport Road	North	Unknown	Asphalt	Good	Yes	Granite	Good	No	4.0 None	None	36 inches to 60 inches	Greater than 80 inches	Level	Yes	1.0 Greater than 2%	0.0	1.0	68	60
6817	0	1/8/2016 Sandt DOT	New London	Newport Road	South	Unknown	Asphalt	Good	Yes	Granite	Good	No	4.0 None	None	36 inches to 60 inches	Greater than 80 inches	Level	Yes	5.0 Greater than 2%	0.0	1.0	68	60
7925	0	1/28/2016 Nichols district 1	Franconia	Rte 116	West	Unknown	Asphalt	Fair	Yes	Granite	Fair	No	4.0 Bicycle Lane	None	36 inches to 60 inches	Greater than 80 inches	Greater than 0.50 inches	No	1.0 Less than or equal to 2%	3.0	1.0	68	60
8987	0	2/18/2016 Nichols district 1	Conway	Rte 16/113	North	Unknown	Asphalt	Fair	Yes	Granite	Fair	No	0.0 None	None	36 inches to 60 inches	Greater than 80 inches	Greater than 0.50 inches	No	3.0 Less than or equal to 2%	0.0	1.0	68	60
10108	0	3/21/2016 Nichols district 1	Bartlett	Rte 302	South	Unknown	Asphalt	Fair	Yes	Granite	Fair	No	4.00000000000 Bicycle Lane	None	36 inches to 60 inches	Greater than 80 inches	Greater than 0.50 inches	No	4.5 Less than or equal to 2%	2.0	1.0	68	60
409	845	4/30/2015 Srpc tom	Newmarket	south main street	West	Unknown	Concrete	Good	No	Granite	Good	No	7.0 Parking Spaces	None	less than 36 inches	Greater than 80 inches	Level	No	11.0 Greater than 2%	3.0	1.0	67	61
4221	41190	8/4/2015 Sandt DOT	Hopkinton	Main Street	North	Unknown	Asphalt	Good	Yes	None	N/A	No	0.0 Grass Strip	Vegetation	36 inches to 60 inches	Less than 80in	Less than 0.25 inches	No	2.0 Less than or equal to 2%	0.0	1.0	67	61
4317	41289	8/14/2015 Sandt DOT	Wilton	Maple Street	Northeast	Unknown	Asphalt	Good	Yes	Granite	Good	No	8.0 None	None	36 inches to 60 inches	Greater than 80 inches	Less than 0.25 inches	Yes	10.0 Less than or equal to 2%	0.0	1.0	67	61
4424	41396	8/28/2015 Sandt DOT	Troy	South Main	Southwest	Unknown	Asphalt	Good	Yes	Granite	Good	No	2.0 None	Vegetation	36 inches to 60 inches	Less than 80in	Less than 0.25 inches	No	3.0 Less than or equal to 2%	0.0	1.0	67	61
5102	0	11/10/2015 NM SWRPC	Hinsdale	Hancock Street	North-West	Town/City	Concrete	Fair	Yes	Concrete	Poor	No	1.0 None	None	less than 36 inches	Greater than 80 inches	Level	No	8.0 Less than or equal to 2%	2.0	1.0	67	61
6330	0	12/7/2015 Sandt DOT	New Hampton	132	South	Unknown	Asphalt	Fair	Yes	Granite

6666	0	12/18/2015 Sandt DOT	Meredith	Rt 25	North-West	Unknown	Asphalt	Good	Yes	Granite	Good	No	5.0 None	None	36 inches to 60 inches	Unlimited	Level	Yes	1.0 Greater than 2%	0.0	1.0	65	62
6790	0	1/7/2016 Sandt DOT	Tilton	Rt 140	South-West	Unknown	Asphalt	Good	Yes	Granite	Good	No	4.0 None	None	36 inches to 60 inches	Unlimited	Level	Yes	4.0 Greater than 2%	0.0	1.0	65	62
527	1092	6/23/2015 MC SWRPC	North Walpole	Vine Street	North	Unknown	Concrete	Fair	No	None	N/A	No	2.0 None	None	36 inches to 60 inches	Less than 80in	Less than 0.25 inches	No	10.4 Less than or equal to 2%	2.0	1.0	65	62
591	2090	6/26/2015 MC SWRPC	North Walpole	Maple Street	Southwest	Unknown	Concrete	Fair	No	None	N/A	No	0.5 None	None	less than 36 inches	Less than 80in	Less than 0.25 inches	No	6.0 Greater than 2%	1.0	1.0	65	62
4316	41288	8/14/2015 Sandt DOT	Wilton	Maple Street	Northeast	Unknown	Asphalt	Good	Yes	Granite	Good	No	8.0 None	None	36 inches to 60 inches	Unlimited	Less than 0.25 inches	No	9.0 Less than or equal to 2%	0.0	1.0	64	62
4443	41415	8/31/2015 Sandt DOT	Hinsdale	Brattleboro Road	North	Unknown	Asphalt	Good	Yes	Granite	Good	No	0.0 None	None	36 inches to 60 inches	Unlimited	Less than 0.25 inches	No	9.0 Less than or equal to 2%	0.0	1.0	64	62
4613	41586	9/24/2015 Sandt DOT	Enfield	Main Street	North	Unknown	Stamped Asphalt	Good	Yes	Granite	Good	No	5.0 None	None	36 inches to 60 inches	Greater than 80 inches	0.25 inches to 0.50 inches	No	7.0 Greater than 2%	2.0	1.0	64	62
4616	41589	9/24/2015 Sandt DOT	Enfield	Shaker Hill Road	Southwest	Unknown	Stamped Asphalt	Good	Yes	Granite	Good	No	5.0 None	None	36 inches to 60 inches	Greater than 80 inches	0.25 inches to 0.50 inches	No	7.0 Greater than 2%	2.0	1.0	64	62
7959	0	2/1/2016 Nichols district 1	Conway	Rte 302/16	East	Unknown	Brick	Good	Yes	Granite	Good	No	6.0 Bicycle Lane	None	36 inches to 60 inches	Greater than 80 inches	Less than 0.25 inches	No	5.5 Greater than 2%	10.0	1.0	64	62
7960	0	2/1/2016 Nichols district 1	Conway	Rte 302/16	East	Unknown	Brick	Good	Yes	Granite	Good	No	6.0 Bicycle Lane	None	36 inches to 60 inches	Greater than 80 inches	Less than 0.25 inches	No	1.0 Greater than 2%	3.0	1.0	64	62
5035	42930	10/27/2015 Sandt DOT	Hampton	Ocean Blvd	East	Unknown	Asphalt	Fair	Yes	Asphalt	Fair	No	1.0 None	Moveable Objects	Greater than 60 inches	Unlimited	Less than 0.25 inches	Yes	1.0 Less than or equal to 2%	3.0	1.0	63	63
5042	42937	10/29/2015 Sandt DOT	Hampton	Ocean Blvd	East	Unknown	Asphalt	Fair	Yes	Asphalt	Fair	No	1.0 None	Moveable Objects	Greater than 60 inches	Unlimited	Less than 0.25 inches	Yes	1.0 Less than or equal to 2%	3.0	1.0	63	63
681	2180	7/9/2015 Sandt DOT	Merrimack	Greeley Street	North	Unknown	Concrete	Good	Yes	Granite	Good	No	2.0 None	Vegetation	36 inches to 60 inches	Unlimited	0.25 inches to 0.50 inches	No	1.0 Less than or equal to 2%	0.0	1.0	63	63
686	2185	7/9/2015 Sandt DOT	Merrimack	Greeley Street	North	Unknown	Concrete	Good	Yes	Granite	Good	No	4.0 None	Vegetation	36 inches to 60 inches	Unlimited	0.25 inches to 0.50 inches	No	3.0 Less than or equal to 2%	0.0	1.0	63	63
4252	41221	8/7/2015 Sandt DOT	Goffstown	N Mast Street	North	Unknown	Asphalt	Good	Yes	Asphalt	Poor	No	0.0 Grass Strip	None	36 inches to 60 inches	Unlimited	0.25 inches to 0.50 inches	Yes	2.0 Less than or equal to 2%	2.0	1.0	63	63
4368	41340	8/19/2015 Sandt DOT	Peterborough	Main	South	Unknown	Asphalt	Good	Yes	Granite	Good	No	5.0 Parking Spaces	Moveable Objects	36 inches to 60 inches	Unlimited	Less than 0.25 inches	Yes	2.0 Less than or equal to 2%	0.0	1.0	63	63
5047	42942	10/29/2015 Sandt DOT	Hampton	Ocean Blvd	W	Unknown	Concrete	Fair	Yes	Concrete	Fair	No	2.0 Parking Spaces	None	36 inches to 60 inches	Unlimited	Less than 0.25 inches	No	1.0 Greater than 2%	2.0	1.0	63	63
5048	42943	10/29/2015 Sandt DOT	Hampton	Ocean Blvd	W	Unknown	Concrete	Fair	Yes	None	N/A	No	0.0 Parking Spaces	None	36 inches to 60 inches	Unlimited	Less than 0.25 inches	No	1.0 Greater than 2%	0.0	1.0	63	63
6226	0	11/10/2015 Sandt DOT	Hampton	Rt 1	East	Unknown	Asphalt	Fair	Yes	Granite	Fair	No	1.0 None	None	36 inches to 60 inches	Unlimited	0.25 inches to 0.50 inches	No	4.0 Greater than 2%	0.0	1.0	63	63
6227	0	11/10/2015 Sandt DOT	Hampton	Rt 1	West	Unknown	Asphalt	Fair	Yes	Granite	Fair	No	1.0 None	None	36 inches to 60 inches	Unlimited	0.25 inches to 0.50 inches	No	4.0 Greater than 2%	0.0	1.0	63	63
6230	0	11/10/2015 Sandt DOT	Hampton	Rt 1	East	Unknown	Asphalt	Fair	Yes	Granite	Fair	No	1.0 None	None	36 inches to 60 inches	Unlimited	0.25 inches to 0.50 inches	No	4.0 Greater than 2%	0.0	1.0	63	63
6231	0	11/10/2015 Sandt DOT	Hampton	Rt 1	West	Unknown	Asphalt	Fair	Yes	Granite	Fair	No	1.0 None	None	36 inches to 60 inches	Unlimited	0.25 inches to 0.50 inches	No	4.0 Greater than 2%	0.0	1.0	63	63
6576	0	12/16/2015 Wilkinson District 1	Littleton	Cottage Street - Rtes. 302,18,116	West	Unknown	Asphalt	Fair	Yes	Granite	Fair	No	2.0 None	None	36 inches to 60 inches	Unlimited	0.25 inches to 0.50 inches	No	6.0 Greater than 2%	2.0	1.0	63	63
6621	0	12/17/2015 Wilkinson District 1	Pike	Rte. 25	North-West	Unknown	Asphalt	Fair	Yes	Granite	Fair	No	6.0 Bicycle Lane	None	36 inches to 60 inches	Unlimited	0.25 inches to 0.50 inches	No	2.0 Greater than 2%	1.0	1.0	63	63
6770	0	1/5/2016 Sandt DOT	Belmont	Rt 140	South	Unknown	Concrete	Good	Yes	Granite	Good	No	6.0 None	None	36 inches to 60 inches	Unlimited	Less than 0.25 inches	Yes	7.0 Less than or equal to 2%	0.0	1.0	63	63
490	1054	6/17/2015 Sandt DOT	Suncook	Main	Southeast	Unknown	Asphalt	Good	No	Granite	Good	No	4.0 Parking Spaces	Utility Pole	36 inches to 60 inches	Greater than 80 inches	Greater than 0.50 inches	No	5.0 Greater than 2%	3.0	1.0	63	63
492	1056	6/17/2015 Sandt DOT	Suncook	Main	East	Unknown	Asphalt	Good	No	Granite	Good	No	6.0 Parking Spaces	Fixed Object	36 inches to 60 inches	Greater than 80 inches	Greater than 0.50 inches	No	6.6 Greater than 2%	0.0	1.0	63	63
493	1057	6/17/2015 Sandt DOT	Suncook	Main	West	Unknown	Asphalt	Good	No	Granite	Good	No	6.0 Parking Spaces	Fixed Object	36 inches to 60 inches	Greater than 80 inches	Greater than 0.50 inches	No	5.6 Greater than 2%	0.0	1.0	63	63
628	2127	6/30/2015 Sandt DOT	Manchester	Hanover Street	South	Unknown	Asphalt	Good	No	Granite	Good	No	5.0 None	Utility Pole	36 inches to 60 inches	Greater than 80 inches	Greater than 0.50 inches	No	4.0 Greater than 2%	1.0	1.0	63	63
4404	41376	8/26/2015 Sandt DOT	Concord	South Street	East	Unknown	Asphalt	Good	Yes	None	N/A	No	0.0 Grass Strip	None	36 inches to 60 inches	Greater than 80 inches	Level	No	11.0 Less than or equal to 2%	0.0	1.0	63	63
4504	41477	9/4/2015 Sandt DOT	Marlborough	Main St 101	Southwest	Unknown	Asphalt	Good	Yes	Granite	Good	No	4.0 Grass Strip	None	36 inches to 60 inches	Greater than 80 inches	Level	No	9.0 Less than or equal to 2%	1.0	1.0	63	63
6209	0	12/1/2015 Wilkinson District 1	Errol	Rte. 26	North-East	Unknown	Asphalt	Good	No	Granite	Good	No	4.0 Bicycle Lane	None	36 inches to 60 inches	Greater than 80 inches	Greater than 0.50 inches	Yes	4.0 Greater than 2%	0.0	1.0	63	63
6704	0	12/23/2015 Sandt DOT	Andover	Rt 4	South	Unknown	Asphalt	Good	Yes	Granite	Good	No	4.0 None	None	36 inches to 60 inches	Greater than 80 inches	Level	No	9.0 Less than or equal to 2%	0.0	1.0	63	63
6555	0	12/15/2015 Sandt DOT	Tilton	School Street	West	Unknown	Asphalt	Fair	Yes	Granite	Fair	No	2.0 None	None	Greater than 60 inches	Greater than 80 inches	Less than 0.25 inches	Yes	2.0 Less than or equal to 2%	0.0	1.0	62	64
553	2052	6/26/2015 Sandt DOT	Manchester	Maple	Southeast	Unknown	Concrete	Good	Yes	Granite	Good	No	4.0 None	None	36 inches to 60 inches	Greater than 80 inches	Greater than 0.50 inches	No	3.0 Less than or equal to 2%	0.0	1.0	62	64
4458	41431	9/1/2015 Sandt DOT	Boscawen	N Main	East	Unknown	Asphalt	Good	Yes	None	N/A	No	0.0 Grass Strip	None	36 inches to 60 inches	Greater than 80 inches	Less than 0.25 inches	Yes	5.0 Less than or equal to 2%	0.0	1.0	62	64
4459	41432	9/1/2015 Sandt DOT	Boscawen	N Main	East	Unknown	Asphalt	Good	Yes	None	N/A	No	0.0 Grass Strip	None	36 inches to 60 inches	Greater than 80 inches	Less than 0.25 inches	Yes	1.0 Less than or equal to 2%	0.0	1.0	62	64
4460	41433	9/1/2015 Sandt DOT	Boscawen	N Main	East	Unknown	Asphalt	Good	Yes	None	N/A	No	0.0 Grass Strip	None	36 inches to 60 inches	Greater than 80 inches	Less than 0.25 inches	Yes	1.0 Less than or equal to 2%	0.0	1.0	62	64
4464	41437	9/2/2015 Sandt DOT	Winchester	Rt 10	East	Unknown	Concrete	Good	Yes	None	N/A	No	0.0 None	None	36 inches to 60 inches	Greater than 80 inches	Level	Yes	1.0 Less than or equal to 2%	0.0	1.0	62	64
4465	41438	9/2/2015 Sandt DOT	Winchester	Rt 10	East	Unknown	Concrete	Good	Yes	None	N/A	No	0.0 None	None	36 inches to 60 inches	Greater than 80 inches	Level	Yes	1.0 Less than or equal to 2%	0.0	1.0	62	64
4466	41439	9/2/2015 Sandt DOT	Winchester	Rt 10	East	Unknown	Concrete	Good	Yes	None	N/A	No	0.0 None	None	36 inches to 60 inches	Greater than 80 inches	Level	Yes	1.0 Less than or equal to 2%	0.0	1.0	62	64
4468	41441	9/2/2015 Sandt DOT	Winchester	Rt 10	West	Unknown	Asphalt	Good	Yes	None	N/A	No	0.0 None	None	36 inches to 60 inches	Greater than 80 inches	Less than 0.25 inches	Yes	1.0 Less than or equal to 2%	0.0	1.0	62	64
4469	41442	9/2/2015 Sandt DOT	Winchester	Rt 10	West	Unknown	Asphalt	Good	Yes	None	N/A	No	0.0 None	None	36 inches to 60 inches	Greater than 80 inches	Less than 0.25 inches	Yes	1.0 Less than or equal to 2%	0.0	1.0	62	64
4470	41443	9/2/2015 Sandt DOT	Winchester	Rt 10	West	Unknown	Asphalt	Good	Yes	None	N/A	No	0.0 None	None	36 inches to 60 inches	Greater than 80 inches	Less than 0.25 inches	Yes	1.0 Less than or equal to 2%	0.0	1.0	62	64
4471	41444	9/2/2015 Sandt DOT	Winchester	Rt 10	Southeast	Unknown	Concrete	Good	Yes	Granite	Good	No	2.0 Parking Spaces	None	36 inches to 60 inches	Greater than 80 inches	Level	Yes	2.0 Less than or equal to 2%	1.0	1.0	62	64
4472	41445	9/2/2015 Sandt DOT	Winchester	Rt 10	Southeast	Unknown	Concrete	Good	Yes	None	N/A	No	2.0 Grass Strip	None	36 inches to 60 inches	Greater than 80 inches	Level	Yes	2.0 Less than or equal to 2%	0.0	1.0	62	64
4567	41540	9/18/2015 Sandt DOT	Plainfield	Rt 12A	West	Unknown	Asphalt	Good	Yes	Granite	Good	No	3.0 None	Utility Pole	36 inches to 60 inches	Greater than 80 inches	Less than 0.25 inches	No	2.0 Less than or equal to 2%	7.0	1.0	62	64
5228	0	11/23/2015 Sandt DOT	Wolfeboro	Rt 109	West	Unknown	Concrete	Good	Yes	Granite	Good	No	6.0 Parking Spaces	None	36 inches to 60 inches	Greater than 80 inches	Level	Yes	2.0 Less than or equal to 2%	1.0	1.0	62	64
6237	0	12/3/2015 Sandt DOT	Campton	Livermore Rd	South-West	Unknown	Asphalt	Fair	Yes	Granite	Good	No	4.0 None	None	36 inches to 60 inches	Greater than 80 inches	Less than 0.25 inches	No	8.0 Greater than 2%	0.0	1.0	62	64
6428	0	12/10/2015 Nichols district 1	Lancaster	Middle street	South	Unknown	Asphalt	Good	Yes	Asphalt	Good	No	5.0 None	Utility Pole	36 inches to 60 inches	Greater than 80 inches	Less than 0.25 inches	No	8.0 Less than or equal to 2%	5.0	1.0	62	64
6490	0	12/14/2015 Sandt DOT	Bristol	Rt 104	North	Unknown	Concrete	Good	Yes	Granite	Good	No	3.0 Parking Spaces	None	36 inches to 60 inches	Greater than 80 inches	Level	Yes	2.0 Less than or equal to 2%	1.0	1.0	62	64
6587	0	12/16/2015 Wilkinson District 1	Littleton	Cottage Street-Rtes. 302,18,116	West	Unknown	Concrete	Good	No	Granite	Good	No	0.3 Parking Spaces	None	36 inches to 60 inches	Greater than 80 inches	Greater than 0.50 inches	No	12.0 Less than or equal to 2%	1.0	1.0	62	64
6735	0	12/28/2015 Sandt DOT	Meredith	Rt 3	East	Unknown	Asphalt	Good	Yes	Granite	Good	No	5.0 None	None	36 inches to 60 inches	Greater than 80 inches	Less than 0.25 inches	Yes	3.0 Less than or equal to 2%	2.0	1.0	62	64
6747	0	12/31/2015 Nichols district 1	Woodsville	Rte 302	North	Unknown	Asphalt	Fair	Yes	Granite	Fair	No	5.0 Parking Spaces	None	36 inches to 60 inches	Greater than 80 inches	Less than 0.25 inches	No	2.0 Greater than 2%	5.0	1.0	62	64
8977	0	2/8/2016 Nichols district 1	Conway	Rte 16/113	North	Unknown	Asphalt	Fair	Yes	Granite	Fair	No	6.0 Bicycle Lane	None	36 inches to 60 inches	Greater than 80 inches	Less than 0.25 inches	No	2.0 Greater than 2%	8.0	1.0	62	64
9038	0	3/11/2016 Sandt DOT	Windham	I935	West	Unknown	Concrete	Good	Yes	Concrete	Fair	No	6.0000000000 Grass Strip	Vegetation	36 inches to 60 inches	Greater than 80 inches	Less than 0.25 inches	No	5.0 Less than or equal to 2%	0.0	1.0	62	64
10139	0	3/30/2016 Sandt DOT	Plaistow	Main Street	East	Unknown	Asphalt	Fair	Yes	Asphalt	Fair	No	2.0000000000 Grass Strip	None	36 inches to 60 inches	Greater than 80 inches	Less than 0.25 inches	No	3.0 Greater than 2%	3.0	1.0	62	64
819	3187	7/21/2015 Sandt DOT	Londonderry	Mammoth	East	Unknown	Asphalt	Fair	Yes	Granite	Good	No	2.0 Grass Strip	Vegetation	36 inches to 60 inches	Unlimited	Level	Yes	1.0 Less than or equal to 2%	0.0	1.0	61	64
4249	41218	8/7/2015 Sandt DOT	Goffstown	N Mast Street	South	Unknown	Asphalt	Good	Yes	None	N/A	No	0.0 Grass Strip	Vegetation	36 inches to 60 inches	Unlimited	Level	No	3.0 Greater than 2%	0.0	1.0	61	64
5021	42916	10/27/2015 Nichols district 1	Colebrook	Rte 3	East	Unknown	Asphalt	Fair	No	Granite	Fair	No	2.0 Bicycle Lane	Utility Pole	36 inches to 60 inches	Greater than 80 inches	0.25 inches to 0.50 inches	No	6.6 Greater than 2%	5.0	1.0	61	64
6147	0	11/25/2015 Nichols district 1	Gorham	Rte 16	West	Unknown	Asphalt	Fair	Yes	Granite	Fair	No	4.0 Bicycle Lane	Fixed Object	36 inches to 60 inches	Greater than 80 inches	0.25 inches to 0.50 inches	No	2.0 Greater than 2%	0.0	1.0	61	64
808	3175	7/20/2015 Sandt DOT	Chichester	US 202	South	Unknown	Asphalt	Good	Yes	None	N/A	No	0.0 Grass Strip	None	less than 36 inches	Unlimited	Level	No	2.0 Greater than 2%	0.0	1.0	60	65
4239	41208	8/7/2015 Sandt DOT	Goffstown	Main Street	Southwest	Unknown	Asphalt	Good	Yes	Granite	Good	No	6.0 None	None	36 inches to 60 inches	Unlimited	0.0 Less than or equal to 2%	Yes	1.0 Less than or equal to 2%	1.0	1.0	60	65
608	2107	6/26/2015 MC SWRPC	North Walpole	Main Street	East	Unknown	Concrete	Fair	No	None	N/A	No	0.5 Grass Strip	None	less than 36 inches	Greater than 80 inches	0.25 inches to 0.50 inches	No	2.0 Greater than 2%	3.0	1.0	60	65
732	2231	7/13/2015 Sandt DOT	Nashua	Main Street	West	Unknown	Concrete	Good	Yes	Granite	Good	No	4.0 Bicycle Lane	None	36 inches to 60 inches	Greater than 80 inches	0.25 inches to 0.50 inches	No	6.0 Greater than 2%	6.0	1.0	60	65
4611	41584	9/24/2015 Sandt DOT	Enfield	Main Street	North	Unknown	Stamped Asphalt	Good	Yes	Granite	Good	No	5.0 None	None	36 inches to 60 inches	Greater than 80 inches	Less than 0.25 inches	No	5.0 Greater than 2%	6.0	1.0	60	65
4614	41587	9/24/2015 Sandt DOT	Enfield	Main Street	North	Unknown	Stamped Asphalt	Good	Yes	Granite	Good	No	5.0 Grass Strip	None	36 inches to 60 inches	Greater than 80 inches	Less than 0.25 inches	No	2.0 Greater than 2%	1.0	1.0	60	65
5001	42896	10/27/2015 Nichols district 1	Colebrook	Rte3	East	Unknown	Asphalt	Fair	No	Granite	Fair	No	6.0 Parking Spaces	Utility Pole	36 inches to 60 inches	Less than 80in	0.25 inches to 0.50 inches	No	0.4 Less than or equal to 2%	0.0	1.0	60	65
6311	0	12/1/2015 Nichols district 1	Groveton	Rte 3	East	Unknown	Concrete	Fair	Yes	Granite	Fair	No	5.0 Bicycle Lane	None	36 inches to 60 inches	Greater than 80 inches	0.25 inches to 0.50 inches	No	0.5 Less than or equal to 2%	0.0	1.0	60	65
6358	0	12/8/2015 Nichols district 1	Lancaster	Rte 2 and Rte 3	East	Unknown	Concrete	Fair	Yes	Granite	Poor	No	2.0 Grass Strip	None	36 inches to 60 inches	Greater than 80 inches	0.25 inches to 0.50 inches	No	1.0 Less than or equal to 2%	2.0	1.0	60	65
6363	0	12/8/2015 Nichols district 1	Lancaster	Rte 2 and Rte 3	East	Unknown	Concrete	Fair	Yes	Granite	Fair	No	4.0 Grass Strip	None	36 inches to 60 inches	Greater than 80 inches	0.25 inches to 0.50 inches	No	1.0 Less than or equal to 2%	8.0	1.0	60	65
7903	0	1/27/2016 Nichols district 1	Conway	Rte 302/16	East	Unknown	Concrete	Fair	Yes	None	N/A	No	0.0 Bicycle Lane	None	36 inches to 60 inches	Greater than 80 inches	0.25 inches to 0.50 inches	No	2.0 Less than or equal to 2%	0.0	1.0	60	65
7907	0	1/27/2016 Nichols district 1	Conway	Rte 302/16	East	Unknown	Concrete	Fair	Yes	None	N/A	No	0.0 Bicycle Lane	None	36 inches to 60 inches	Greater than 80 inches	0.25 inches to 0.50 inches	No	1.0 Less than or equal to 2%	0.0	1.0	60	65
7964	0	2/2/2016 Wilkinson District 1	Conway	Rte. 16 and 302	West	Unknown	Concrete	Good	Yes	Granite	Good	No	6.0 Bicycle Lane	None	36 inches to 60 inches	Greater than 80 inches	0.25 inches to 0.50 inches	No	1.0 Greater than 2%	6.0	1.0	60	65
4886	42699	10/23/2015 Sandt DOT	Newmarket	Main Street	North	Unknown	Asphalt	Good	Yes	Granite	Good	No	3.0 None	None	Greater than 60 inches	Unlimited	Less than 0.25 inches	Yes	6.0 Greater than 2%	2.0	1.0	59	65
4953	42767	10/27/2015 Sandt DOT	Hampton	Ocean Blvd	East	Unknown	Asphalt	Fair	Yes	Asphalt	Fair	No	3.0 None	None	Greater than 60 inches	Unlimited	Less than 0.25 inches	Yes	1.0 Less than or equal to 2%	1.0	1.0	59	65
413	857	4/30/2015 Srpc tom	Newmarket	108	East	Unknown	Concrete	Good	No	Granite	Good	No	7.0 Parking Spaces	Hydrant	less than 36 inches	Unlimited	Level	No	7.0 Greater than 2%	1.0	1.0	59	65
550	2049	6/26/2015 Sandt DOT	Manchester	Daniel Webster Hwy	Southeast	Unknown	Concrete	Good	Yes	Granite	Good	No	4.0 None	Utility Pole	36 inches to 60 inches	Unlimited	Level	No	0.0 Less than or equal to 2%	1.0	1.0	59	65
591	2092	6/26/2015 MC SWRPC	North Walpole	Center Street	North	Unknown	Concrete	Fair	Yes	None	N/A	No	0.5 None	None	36 inches to 60 inches	Unlimited	Level	No	4.0 Greater than 2%	0.0	1.0	59	65
4251	41220	8/7/2015 Sandt DOT	Goffstown	N Mast Street	North	Unknown	Asphalt	Good	Yes	Asphalt	Poor	No	0.0 Grass Strip	None	36 inches to 60 inches	Unlimited	Less than 0.25 inches	Yes	1.0 Less than or equal to 2%	2.0	1.0	59	65
4309	41280	8/14/2015 Sandt DOT	Wilton	Forest Road	South	Unknown	Concrete	Fair	Yes	Granite	Fair	No	1.0 None	None	36 inches to 60 inches	Unlimited	Level	No	3.0 Greater than 2%	0.0	1.0	59	65
4362	41334	8/18/2015 Sandt DOT	Peterborough	202	West	Unknown	Asphalt	Good	Yes	Asphalt	Good	No	2.0 None	None	36 inches to 60 inches	Unlimited	Less than 0.25 inches	Yes	1.0 Less than or equal to 2%	0.0	1.0	59	65
4446	41419	8/31/2015 Sandt DOT	Hinsdale	Brattleboro Road	South	Unknown	Asphalt	Good	Yes	None	N/A	No	0.0 Grass Strip	None	36 inches to 60 inches	Unlimited	Less than 0.25 inches	Yes	2.0 Less than or equal to 2%	0.0	1.0	59	65
4447	41420	8/31/2015 Sandt DOT	Hinsdale	Brattleboro Road	South	Unknown	Asphalt	Good	Yes	None	N/A	No	0.0 Grass Strip	None	36 inches to 60 inches	Unlimited	Less than 0.25 inches	Yes	2.0 Less than or equal to 2%	0.0	1.0	59	65
4550	41523	9/17/2015 Sandt DOT	Newport	Rt 10	East	Unknown	Asphalt	Good	Yes	Asphalt	Fair	No	5.0 None	None	36 inches to 60 inches	Unlimited	Less than 0.25 inches	Yes	1.0 Less than or equal to 2%	0.0	1.0	59	65
4758	41731	10/7/2015 Sandt DOT	Newington	Gosling Road	South	Unknown	Asphalt	Good	Yes	Granite	Good	No	3.0 None	None	36 inches to 60 inches	Unlimited	Less than 0.25 inches	Yes	2.0 Less than or equal to 2%	0.0	1.0	59	65
4759	41732	10/7/2015 Sandt DOT	Newington	Woodbury Ave	East	Unknown	Asphalt	Good	Yes	Granite	Good	No	3.0 None	None	36 inches to 60 inches	Unlimited	Less than 0.25 inches	Yes	2.0 Less than or equal to 2%	0.0	1.0	59	65
4828	41801	10/16/2015 Sandt DOT	Concord	202/4	South	Unknown	Concrete	Good	Yes	Granite	Good	No	8.0 None	None	36 inches to 60 inches	Unlimited	Greater than 0.50 inches	No	1.0 Less than or equal to 2%	0.0	1.0	59	65
4852	42665	10/21/2015 Sandt DOT	Portsmouth	Market Street	North	Unknown	Concrete	Good	Yes	Granite	Good	No	6.0 None	None	36 inches to 60 inches	Unlimited	Level	No	0.0 Less than or equal to 2%	0.0	1.0	59	65
4988	42803	11/2/2015 Melendy district one	Colebrook	Rte145	South-East	Unknown	Concrete	Good	Yes	Concrete	Poor	No	3.0 None	None	36 inches to 60 inches	Unlimited	Greater than 0.50 inches	No	1.0 Less than or equal to 2%	0.0	1.0	59	65
5046	42941	10/29/2015 Sandt DOT	Hampton	Ocean Blvd	W	Unknown	Asphalt	Fair	Yes	Asphalt	Poor	No	0.0 Parking Spaces	None	36 inches to 60 inches	Unlimited	Less than 0.25 inches	No	1.0 Greater than 2%	2.0	1.0	59	65
9021	0	3/7/2016 Sandt DOT	Swanzey	Rt 12	West	Unknown	Asphalt	Good	Yes	Granite	Good	No	1.0 None	None	36 inches to 60 inches	Unlimited	Less than 0.25 inches	Yes	3.0 Less than or equal to 2%	2.0	1.0	59	65
9025	0	3/7/2016 Sandt DOT	Swanzey	Rt 12	West	Unknown	Asphalt	Good	Yes	Granite	Good	No	3.0 None	None	36 inches to 60 inches	Unlimited	Less than 0.25 inches	Yes	5.0 Less than or equal to 2%	4.0	1.0	59	65
9081	0	3/16/2016 Sandt DOT	Plaistow	Rt 125	West	Unknown	Asphalt	Good	Yes	Granite	Good	No	5.0000000000 None	None	36 inches to 60 inches	Unlimited	Less than 0.25 inches	Yes	6.0 Less than or equal to 2%	1.0	1.0	59	65
9085	0	3/16/2016 Sandt DOT	Plaistow	Rt 125	East	Unknown	Asphalt	Good	Yes	Granite	Good	No	5.0000000000 None	None	36 inches to 60 inches	Unlimited	Less than 0.25 inches	Yes	3.0 Less than or equal to 2%	6.0	1.0	59	65
506	1070	6/22/2015 Sandt DOT	Allenstown	Main	West	Unknown	Asphalt	Good	Yes	Granite	Good	No	2.0 Parking Spaces	None	Greater than 60 inches	Greater than 80 inches	Greater than 0.50 inches	No	3.0 Greater than 2%	1.0	1.0	58	66
6257	0	12/3/2015 Sandt DOT	Holderness	Bridge Street	North	Unknown	Asphalt	Good	Yes	Granite	Good	No	7.0 Grass Strip	None	Greater than 60 inches	Greater than 80 inches	Level	Yes	13.0 Greater than 2%	0.0	1.0	58	66
6273	0	12/4/2015 Sandt DOT	Plymouth	Rt 3	East	Unknown	Asphalt	Good	Yes	Granite	Good	No	6.0 Parking Spaces	Utility Pole	Greater than 60 inches	Greater than 80 inches	Level	No	4.0 Greater than 2%	5.0	1.0	58	66
6274	0	12/4/2015 Sandt DOT	Plymouth	Rt 3	East	Unknown	Asphalt	Good	Yes	Granite	Good	No	6.0 Parking Spaces	Utility Pole	Greater than 60 inches	Greater than 80 inches	Level	No	4.0 Greater than 2%	1.0	1.0	58	66
6550	0	12/15/2015 Nichols district 1	Littleton	Rte 135	South	Unknown	Asphalt	Good	Yes	Granite	Good	No	6.0 Bicycle Lane	Utility Pole	Greater than 60 inches	Greater than 80 inches	Level	No	1.0 Greater than 2%	0.0	1.0	58	66
10142	0	3/31/2016 Sandt DOT	Bow	I89	South	Unknown	Asphalt	Good	Yes	None	Fair	No	0.0000000000 Grass Strip	None	Greater than 60 inches	Greater than 80 inches	Level	Yes	8.0 Greater than 2%	0.0	1.0	58	66
481	1045	6/15/2015 Sandt DOT	Pembroke	Academy Road	South	Unknown	Asphalt	Good	No	Granite	Good	No	2.0 None	Vegetation	36 inches to 60 inches	Less than 80in	Greater than 0.50 inches	No	1.0 Less than or equal to 2%	0.0	1.0	58	66
486	1050	6/17/2015 Sandt DOT	Pembroke	Broadway	West	Unknown	Asphalt	Good	No	Granite	Good	No	6.0 Grass Strip	Vegetation	36 inches to 60 inches	Less than 80in	Greater than 0.50 inches	No	4.1 Less than or equal to 2%	3.0	1.0	58	66
536	1102	6/24/2015 Sandt DOT	Hooksett / Manchester	Daniel Webster Hwy	Northwest	Unknown	Asphalt	Good	Yes	Granite	Good	No	5.0 Grass Strip	None	36 inches to 60 inches	Greater than 80 inches	Greater than 0.50 inches	No	2.0 Less than or equal to 2%	0.0	1.0	58	66
539	1105	6/24/2015 Sandt DOT	Hooksett	Daniel Webster Hwy	Northwest	Unknown	Asphalt	Good	Yes	Granite	Good	No	5.0 Grass Strip	None	36 inches to 60 inches	Greater than 80 inches	Greater than 0.50 inches	No	3.0 Less than or equal to 2%	0.0	1.0	58	66
562	2061	6/26/2015 Sandt DOT	Manchester	Front	Northeast	Unknown	Asphalt	Good	Yes	Asphalt	Poor	No	0.0 None	None	36 inches to 60

7957	0	2/1/2016	Nichols district 1	Conway	Rte 302/16	East	Unknown	Concrete	Good	Yes	Granite	Good	No	6.0 Bicycle Lane	None	36 inches to 60 inches	Greater than 80 inches	Less than 0.25 inches	No	2.5 Greater than 2%	8.0	1.0	56	67
7958	0	2/1/2016	Nichols district 1	Conway	Rte 302/16	East	Unknown	Concrete	Good	Yes	Granite	Good	No	6.0 Bicycle Lane	None	36 inches to 60 inches	Greater than 80 inches	Less than 0.25 inches	No	2.5 Greater than 2%	3.0	1.0	56	67
8988	0	2/18/2016	Nichols district 1	Conway	Rte 16	West	Unknown	Asphalt	Fair	Yes	Granite	Fair	No	0.0 Bicycle Lane	None	36 inches to 60 inches	Greater than 80 inches	0.25 inches to 0.50 inches	No	3.5 Less than or equal to 2%	1.0	1.0	56	67
636	2135	7/2/2015	Sandt DOT	Manchester	Hanover Street	North	Unknown	Asphalt	Fair	Yes	Granite	Good	No	2.0 Grass Strip	None	Greater than 60 inches	Unlimited	Greater than 0.50 inches	No	1.0 Less than or equal to 2%	0.0	1.0	55	68
4961	42776	10/29/2015	Sandt DOT	Hampton	Ocean Blvd	W	Unknown	Asphalt	Good	Yes	Asphalt	Poor	No	0.0 None	Utility Pole	Greater than 60 inches	Unlimited	Level	No	1.0 Greater than 2%	0.0	1.0	55	68
487	1051	6/17/2015	Sandt DOT	Pembroke	Broadway	West	Unknown	Asphalt	Good	No	Granite	Good	No	6.0 Grass Strip	None	36 inches to 60 inches	Unlimited	Greater than 0.50 inches	No	12.1 Less than or equal to 2%	3.0	1.0	55	68
534	1100	6/24/2015	Sandt DOT	Hooksett	Daniel Webster Hwy	Southeast	Unknown	Asphalt	Good	Yes	Granite	Good	No	5.0 Grass Strip	None	36 inches to 60 inches	Unlimited	Greater than 0.50 inches	No	1.0 Less than or equal to 2%	0.0	1.0	55	68
537	1103	6/24/2015	Sandt DOT	Hooksett	Daniel Webster Hwy	Northwest	Unknown	Asphalt	Good	Yes	Granite	Good	No	5.0 Grass Strip	None	36 inches to 60 inches	Unlimited	Greater than 0.50 inches	No	2.0 Less than or equal to 2%	0.0	1.0	55	68
540	1106	6/24/2015	Sandt DOT	Hooksett	Daniel Webster Hwy	West	Unknown	Asphalt	Good	Yes	Granite	Good	No	5.0 Grass Strip	None	36 inches to 60 inches	Unlimited	Greater than 0.50 inches	No	3.0 Less than or equal to 2%	0.0	1.0	55	68
541	2040	6/25/2015	Sandt DOT	Hooksett	W River	Northwest	Unknown	Asphalt	Good	Yes	Granite	Good	No	3.0 Grass Strip	None	36 inches to 60 inches	Unlimited	Greater than 0.50 inches	No	3.0 Less than or equal to 2%	3.0	1.0	55	68
631	2130	6/30/2015	Sandt DOT	Manchester	Hanover Street	South	Unknown	Asphalt	Good	Yes	Granite	Good	No	4.0 None	None	36 inches to 60 inches	Unlimited	Greater than 0.50 inches	No	1.0 Less than or equal to 2%	2.0	1.0	55	68
750	2249	7/14/2015	Sandt DOT	Litchfield	Charles Bancroft Hwy	Northeast	Unknown	Asphalt	Good	Yes	Granite	Good	No	5.0 None	None	36 inches to 60 inches	Unlimited	Level	Yes	0.0 Less than or equal to 2%	3.0	1.0	55	68
751	2250	7/14/2015	Sandt DOT	Litchfield	Charles Bancroft Hwy	Northeast	Unknown	Asphalt	Good	Yes	Granite	Good	No	5.0 None	None	36 inches to 60 inches	Unlimited	Level	Yes	0.0 Less than or equal to 2%	3.0	1.0	55	68
4428	41400	8/28/2015	Sandt DOT	Troy	Rt 12	West	Unknown	Asphalt	Good	Yes	Granite	Good	No	5.0 None	None	36 inches to 60 inches	Unlimited	Greater than 0.50 inches	No	5.0 Less than or equal to 2%	0.0	1.0	55	68
4599	41572	9/23/2015	Sandt DOT	Hanover	Greensboro Road	North	Unknown	Asphalt	Good	Yes	Asphalt	Good	No	3.0 Grass Strip	None	36 inches to 60 inches	Unlimited	Level	Yes	5.0 Less than or equal to 2%	0.0	1.0	55	68
4874	42687	10/22/2015	Sandt DOT	Portsmouth	Pease Blvd	North	Unknown	Asphalt	Good	Yes	Granite	Good	No	5.0 Grass Strip	None	36 inches to 60 inches	Unlimited	Level	Yes	1.0 Less than or equal to 2%	0.0	1.0	55	68
5061	42956	11/2/2015	Sandt DOT	Hampton	Ocean Blvd	East	Unknown	Asphalt	Good	Yes	None	N/A	No	0.0 Grass Strip	None	36 inches to 60 inches	Unlimited	Level	Yes	1.0 Less than or equal to 2%	0.0	1.0	55	68
5066	42961	11/2/2015	Sandt DOT	Hampton	Ocean Blvd	East	Unknown	Asphalt	Good	Yes	Granite	Good	No	2.0 Grass Strip	None	36 inches to 60 inches	Unlimited	Level	Yes	1.0 Less than or equal to 2%	2.0	1.0	55	68
5172	0	11/5/2015	Sandt DOT	Seabrook	286	South	Unknown	Asphalt	Good	Yes	Granite	Good	No	6.0 None	Utility Pole	36 inches to 60 inches	Unlimited	Level	No	1.0 Less than or equal to 2%	3.0	1.0	55	68
5279	0	11/24/2015	Sandt DOT	Moultonborough	Moultonborough Neck Road	South-West	Unknown	Asphalt	Fair	Yes	None	N/A	No	0.0 Grass Strip	None	36 inches to 60 inches	Unlimited	Level	No	3.0 Greater than 2%	0.0	1.0	55	68
6709	0	12/23/2015	NM SWRPC	Hinsdale	Depot st	North-East	Unknown	Asphalt	Fair	Yes	Granite	Good	No	8.5 None	None	36 inches to 60 inches	Unlimited	Level	No	7.0 Greater than 2%	0.0	1.0	55	68
6792	0	1/7/2016	Sandt DOT	Tilton	Rt 3	South	Unknown	Asphalt	Good	Yes	Granite	Good	No	4.0 None	None	36 inches to 60 inches	Unlimited	Level	Yes	6.0 Less than or equal to 2%	0.0	1.0	55	68
7894	0	1/26/2016	Wilkinson District 1	Conway	Rte. 16 and 302	South-West	Unknown	Concrete	Good	No	Granite	Good	No	7.0 Bicycle Lane	Fixed Object	36 inches to 60 inches	Greater than 80 inches	0.25 inches to 0.50 inches	No	Greater than 2%	1.0	1.0	55	68
7895	0	1/26/2016	Wilkinson District 1	Conway	Rte. 16 and 302	South-West	Unknown	Concrete	Good	No	Granite	Good	No	7.0 Bicycle Lane	Fixed Object	36 inches to 60 inches	Greater than 80 inches	0.25 inches to 0.50 inches	No	1.0 Greater than 2%	1.0	1.0	55	68
7896	0	1/26/2016	Wilkinson District 1	Conway	Rte. 16 and 302	South-West	Unknown	Concrete	Good	No	Granite	Good	No	6.0 Bicycle Lane	Fixed Object	36 inches to 60 inches	Greater than 80 inches	0.25 inches to 0.50 inches	No	1.0 Greater than 2%	1.0	1.0	55	68
7965	0	2/2/2016	Wilkinson District 1	Conway	Rte. 16 and 302	West	Unknown	Brick	Good	No	Granite	Good	No	6.0 Bicycle Lane	None	36 inches to 60 inches	Greater than 80 inches	Greater than 0.50 inches	No	8.0 Greater than 2%	8.0	1.0	55	68
7966	0	2/2/2016	Wilkinson District 1	Conway	Rte. 16 and 302	West	Unknown	Brick	Good	No	Granite	Good	No	6.0 Bicycle Lane	None	36 inches to 60 inches	Greater than 80 inches	Greater than 0.50 inches	No	1.0 Greater than 2%	6.0	1.0	55	68
7971	0	2/8/2016	Wilkinson District 1	Conway	Rte. 16 and 302	West	Unknown	Brick	Good	No	Granite	Good	No	6.0 Bicycle Lane	None	36 inches to 60 inches	Greater than 80 inches	Greater than 0.50 inches	No	1.0 Greater than 2%	2.0	1.0	55	68
7973	0	2/8/2016	Wilkinson District 1	Conway	Rte. 16 and 302	West	Unknown	Brick	Good	No	Granite	Good	No	6.0 Parking Spaces	None	36 inches to 60 inches	Greater than 80 inches	Greater than 0.50 inches	No	1.0 Greater than 2%	1.0	1.0	55	68
7974	0	2/9/2016	Wilkinson District 1	Conway	Rte. 16 and 302	West	Unknown	Brick	Good	No	Granite	Good	No	6.0 Parking Spaces	None	36 inches to 60 inches	Greater than 80 inches	Greater than 0.50 inches	No	1.0 Greater than 2%	1.0	1.0	55	68
8974	0	2/10/2016	Wilkinson District 1	Conway	Rte. 16 and 302	West	Unknown	Brick	Good	No	Granite	Good	No	6.0 Parking Spaces	None	36 inches to 60 inches	Greater than 80 inches	Greater than 0.50 inches	No	1.0 Greater than 2%	2.0	1.0	55	68
4943	42757	10/27/2015	Sandt DOT	Hampton	Ocean Blvd	East	Unknown	Asphalt	Good	No	Granite	Good	No	6.0 None	Utility Pole	Greater than 60 inches	Unlimited	Less than 0.25 inches	Yes	2.0 Greater than 2%	4.0	1.0	54	68
4944	42758	10/27/2015	Sandt DOT	Hampton	Ocean Blvd	East	Unknown	Asphalt	Good	No	Granite	Good	No	6.0 Parking Spaces	Utility Pole	Greater than 60 inches	Unlimited	Less than 0.25 inches	Yes	2.0 Greater than 2%	4.0	1.0	54	68
678	2177	7/9/2015	Sandt DOT	Merrimack	Bedford Road	North	Unknown	Concrete	Good	No	Granite	Good	No	6.0 None	None	36 inches to 60 inches	Unlimited	Greater than 0.50 inches	Yes	1.3 Less than or equal to 2%	0.0	1.0	54	68
720	2219	7/13/2015	Sandt DOT	Nashua	East Dunstable Road	West	Unknown	Concrete	Good	No	Granite	Good	No	6.0 None	None	36 inches to 60 inches	Unlimited	Greater than 0.50 inches	Yes	1.0 Less than or equal to 2%	0.0	1.0	54	68
727	2226	7/13/2015	Sandt DOT	Nashua	East Dunstable Road	East	Unknown	Concrete	Good	No	Granite	Good	No	6.0 None	None	36 inches to 60 inches	Unlimited	Greater than 0.50 inches	Yes	1.0 Less than or equal to 2%	0.0	1.0	54	68
4629	41602	9/25/2015	Sandt DOT	Brentwood	North Road	Northwest	Unknown	Concrete	Good	No	Granite	Good	No	5.0 None	None	36 inches to 60 inches	Unlimited	Greater than 0.50 inches	Yes	1.0 Less than or equal to 2%	0.0	1.0	54	68
4635	41608	9/25/2015	Sandt DOT	Brentwood	North Road	Southeast	Unknown	Concrete	Good	No	Granite	Good	No	5.0 None	None	36 inches to 60 inches	Unlimited	Greater than 0.50 inches	Yes	1.0 Less than or equal to 2%	0.0	1.0	54	68
5069	42964	11/2/2015	Sandt DOT	Hampton	Ocean Blvd	East	Unknown	Concrete	Good	No	Concrete	Good	No	8.0 Grass Strip	None	36 inches to 60 inches	Unlimited	Greater than 0.50 inches	Yes	2.0 Less than or equal to 2%	2.0	1.0	54	68
526	1091	6/23/2015	MC SWRPC	North Walpole	Merchant Street	North	Unknown	Concrete	Fair	No	None	N/A	No	1.0 None	None	36 inches to 60 inches	Unlimited	Less than 0.25 inches	No	10.4 Less than or equal to 2%	5.0	1.0	53	69
822	3190	7/22/2015	Sandt DOT	Londonderry	Nashua Road	South	Unknown	Asphalt	Good	Yes	Granite	Good	No	4.0 None	None	36 inches to 60 inches	Unlimited	0.25 inches to 0.50 inches	No	4.0 Greater than 2%	1.0	1.0	53	69
4351	41323	8/18/2015	Sandt DOT	Bennington	Antrim Road	West	Unknown	Concrete	Good	No	Concrete	Good	No	5.0 None	None	36 inches to 60 inches	Unlimited	Less than 0.25 inches	No	14.0 Greater than 2%	3.0	1.0	53	69
4621	41594	9/24/2015	Sandt DOT	Canaan	Parker Street	North	Unknown	Asphalt	Fair	Yes	None	N/A	No	0.0 None	None	36 inches to 60 inches	Unlimited	0.25 inches to 0.50 inches	No	1.0 Less than or equal to 2%	0.0	1.0	53	69
5139	0	11/18/2015	Sandt DOT	Ossipee	16B	South	Unknown	Asphalt	Good	No	Granite	Good	No	5.0 None	None	36 inches to 60 inches	Unlimited	0.25 inches to 0.50 inches	No	12.0 Greater than 2%	0.0	1.0	53	69
6805	0	1/7/2016	Wilkinson District 1	Woodstock	Rte 112	North	Unknown	Asphalt	Fair	Yes	None	N/A	No	0.0 Grass Strip	None	36 inches to 60 inches	Unlimited	0.25 inches to 0.50 inches	No	3.0 Less than or equal to 2%	0.0	1.0	53	69
9110	0	3/18/2016	Sandt DOT	Plaistow	Rt 125	East	Unknown	Asphalt	Fair	Yes	Granite	Good	No	5.00000000000	None	36 inches to 60 inches	Unlimited	0.25 inches to 0.50 inches	No	7.0 Less than or equal to 2%	5.0	1.0	53	69
530	1095	6/24/2015	Sandt DOT	Hooksett	Hooksett Road	Southeast	Unknown	Asphalt	Good	No	Granite	Good	No	5.0 None	Vegetation	less than 36 inches	Less than 80in	Level	No	1.0 Less than or equal to 2%	7.0	1.0	53	69
5219	0	11/19/2015	Nichols district 1	Gorham	Rte 2 and rte 16	South	Unknown	Asphalt	Fair	No	Granite	Fair	No	6.0 Parking Spaces	None	36 inches to 60 inches	Greater than 80 inches	Greater than 0.50 inches	No	1.0 Greater than 2%	6.0	1.0	53	69
5221	0	11/19/2015	Nichols district 1	Gorham	Rte 2 and rte 16	South	Unknown	Asphalt	Fair	No	Granite	Fair	No	6.0 Parking Spaces	None	36 inches to 60 inches	Greater than 80 inches	Greater than 0.50 inches	No	4.0 Greater than 2%	5.0	1.0	53	69
5260	0	11/24/2015	Nichols district 1	Gorham	Rte 2 and Rte 16	South	Unknown	Asphalt	Fair	No	Granite	Fair	No	6.0 Parking Spaces	None	36 inches to 60 inches	Greater than 80 inches	Greater than 0.50 inches	No	1.0 Greater than 2%	3.0	1.0	53	69
5265	0	11/24/2015	Nichols district 1	Gorham	Rte 2 and Rte 16	South	Unknown	Asphalt	Fair	No	Granite	Fair	No	4.0 Parking Spaces	None	36 inches to 60 inches	Greater than 80 inches	Greater than 0.50 inches	No	3.0 Greater than 2%	3.0	1.0	53	69
5266	0	11/24/2015	Nichols district 1	Gorham	Rte 2 and Rte 16	North-East	Unknown	Asphalt	Fair	No	Granite	Fair	No	6.0 Parking Spaces	None	36 inches to 60 inches	Greater than 80 inches	Greater than 0.50 inches	No	2.0 Greater than 2%	3.0	1.0	53	69
6139	0	11/25/2015	Nichols district 1	Gorham	Rte 2 and Rte 16	North-East	Unknown	Asphalt	Fair	No	Granite	Fair	No	4.0 None	None	36 inches to 60 inches	Greater than 80 inches	Greater than 0.50 inches	No	2.0 Greater than 2%	3.0	1.0	53	69
6141	0	11/25/2015	Nichols district 1	Gorham	Rte 16	North-East	Unknown	Asphalt	Fair	No	Granite	Fair	No	4.0 None	None	36 inches to 60 inches	Greater than 80 inches	Greater than 0.50 inches	No	2.0 Greater than 2%	1.0	1.0	53	69
6146	0	11/25/2015	Nichols district 1	Gorham	Rte 16	West	Unknown	Asphalt	Fair	No	Granite	Fair	No	0.3 Bicycle Lane	None	36 inches to 60 inches	Greater than 80 inches	Greater than 0.50 inches	No	2.0 Greater than 2%	6.0	1.0	53	69
6174	0	11/25/2015	Sandt DOT	Alton	Rt 11	South-West	Unknown	Asphalt	Fair	No	Granite	Good	No	5.0 Parking Spaces	None	36 inches to 60 inches	Greater than 80 inches	Greater than 0.50 inches	No	1.0 Greater than 2%	0.0	1.0	53	69
6825	0	1/11/2016	Sandt DOT	Meredith	Rt 3	West	Unknown	Asphalt	Fair	No	None	N/A	No	0.0 None	None	36 inches to 60 inches	Greater than 80 inches	Greater than 0.50 inches	No	2.0 Greater than 2%	0.0	1.0	53	69
7891	0	1/26/2016	Nichols district 1	Jackson	Rte 16 A	West	Unknown	Asphalt	Fair	No	Granite	Fair	No	5.0 None	None	36 inches to 60 inches	Greater than 80 inches	Greater than 0.50 inches	No	4.0 Greater than 2%	4.0	1.0	53	69
7892	0	1/26/2016	Nichols district 1	Jackson	Rte 16 A	South	Unknown	Asphalt	Fair	No	Granite	Fair	No	5.0 Parking Spaces	None	36 inches to 60 inches	Greater than 80 inches	Greater than 0.50 inches	No	1.0 Greater than 2%	0.0	1.0	53	69
6278	0	12/4/2015	Sandt DOT	Ashland	Rt 3	North	Unknown	Asphalt	Good	Yes	Granite	Good	No	6.0 Parking Spaces	None	Greater than 60 inches	Greater than 80 inches	Less than 0.25 inches	Yes	1.0 Less than or equal to 2%	0.0	1.0	52	69
6557	0	12/15/2015	Sandt DOT	Tilton	School Street	West	Unknown	Asphalt	Good	Yes	None	N/A	No	0.0 Grass Strip	None	Greater than 60 inches	Greater than 80 inches	Less than 0.25 inches	Yes	8.0 Less than or equal to 2%	4.0	1.0	52	69
6802	0	1/7/2016	Wilkinson District 1	Woodstock	Rte 112	North	Unknown	Concrete	Good	No	None	N/A	No	0.0	None	Greater than 60 inches	Greater than 80 inches	Level	Yes	9.0 Less than or equal to 2%	0.0	1.0	52	69
583	2082	6/26/2015	MC SWRPC	North Walpole	Spruce Street	West	Unknown	Concrete	Good	No	None	N/A	No	2.0 None	Utility Pole	less than 36 inches	Greater than 80 inches	Level	No	1.0 Less than or equal to 2%	1.0	1.0	52	69
615	2114	6/26/2015	MC SWRPC	North Walpole	Kileen Street	Northwest	Unknown	Concrete	Good	Yes	Granite	Good	No	4.0 None	None	36 inches to 60 inches	Greater than 80 inches	Level	No	6.3 Greater than 2%	4.0	1.0	52	69
4219	41188	8/4/2015	Sandt DOT	Hopkinton	Main Street	North	Unknown	Asphalt	Good	Yes	None	N/A	No	0.0 Grass Strip	None	36 inches to 60 inches	Greater than 80 inches	Less than 0.25 inches	No	4.0 Greater than 2%	0.0	1.0	52	69
4253	41222	8/7/2015	Sandt DOT	New Boston	River	Southeast	Unknown	Asphalt	Good	Yes	Granite	Good	No	2.0 None	None	36 inches to 60 inches	Greater than 80 inches	Less than 0.25 inches	No	1.0 Greater than 2%	10.0	1.0	52	69
4425	41397	8/28/2015	Sandt DOT	Troy	South Main	Southwest	Unknown	Asphalt	Good	Yes	Granite	Good	No	1.0 None	None	36 inches to 60 inches	Greater than 80 inches	Less than 0.25 inches	No	6.0 Greater than 2%	4.0	1.0	52	69
4496	41469	9/4/2015	Sandt DOT	Marlborough	Main St 101	Northeast	Unknown	Asphalt	Good	Yes	Granite	Good	No	5.0 Parking Spaces	None	36 inches to 60 inches	Greater than 80 inches	Less than 0.25 inches	No	3.0 Greater than 2%	4.0	1.0	52	69
4499	41472	9/4/2015	Sandt DOT	Marlborough	Main St 101	Southwest	Unknown	Asphalt	Good	Yes	Granite	Good	No	6.0 Parking Spaces	None	36 inches to 60 inches	Greater than 80 inches	Less than 0.25 inches	No	3.0 Greater than 2%	5.0	1.0	52	69
4500	41473	9/4/2015	Sandt DOT	Marlborough	Main St 101	South	Unknown	Asphalt	Good	Yes	Granite	Good	No	4.0 Parking Spaces	None	36 inches to 60 inches	Greater than 80 inches	Less than 0.25 inches	No	3.0 Greater than 2%	11.0	1.0	52	69
4505	41478	9/4/2015	Sandt DOT	Marlborough	Jaffrey Road	West	Unknown	Asphalt	Good	Yes	Granite	Good	No	4.0 None	None	36 inches to 60 inches	Greater than 80 inches	Less than 0.25 inches	No	8.0 Greater than 2%	1.0	1.0	52	69
4771	41744	10/8/2015	Sandt DOT	Durham	Main Street	South	Unknown	Concrete	Good	Yes	Granite	Good	No	6.0 Parking Spaces	None	36 inches to 60 inches	Greater than 80 inches	Level	No	1.0 Greater than 2%	0.0	1.0	52	69
4772	41745	10/8/2015	Sandt DOT	Durham	Main Street	South	Unknown	Concrete	Good	Yes	Granite	Good	No	6.0 None	None	36 inches to 60 inches	Greater than 80 inches	Level	No	1.0 Greater than 2%	0.0	1.0	52	69
4903	42716	10/26/2015	Wilkinson District 1	Stewartstown	Rte. 3	East	Unknown	Concrete	Fair	Yes	None	N/A	No	0.0 None	None	36 inches to 60 inches	Greater than 80 inches	Level	No	0.0 Less than or equal to 2%	13.0	1.0	52	69
5095	0	11/13/2015	Sandt DOT	Northfield	132	East	Unknown	Asphalt	Good	Yes	Granite	Good	No	6.0 None	None	36 inches to 60 inches	Greater than 80 inches	Less than 0.25 inches	No	3.0 Greater than 2%	3.0	1.0	52	69
5096	0	11/13/2015	Sandt DOT	Northfield	132	East	Unknown	Asphalt	Good	Yes	Granite	Good	No	6.0 None	None	36 inches to 60 inches	Greater than 80 inches	Less than 0.25 inches	No	3.0 Greater than 2%	3.0	1.0	52	69
5237	0	11/23/2015	Sandt DOT	Wolfeboro	Rt 28	North-East	Unknown	Asphalt	Fair	Yes	None	Fair	No	0.0 Grass Strip	None	36 inches to 60 inches	Greater than 80 inches	Less than 0.25 inches	No	2.0 Less than or equal to 2%	0.0	1.0	52	69
6280	0	12/4/2015	Sandt DOT	Ashland	Rt 3	North	Unknown	Asphalt	Good	Yes	Granite	Good	No	6.0 None	None	36 inches to 60 inches	Greater than 80 inches	Less than 0.25 inches	No	7.0 Greater than 2%	3.0	1.0	52	69
6415	0	12/9/2015	Sandt DOT	New London	Rt 114	South-West	Unknown	Asphalt	Good	Yes	Granite	Good	No	5.0 Parking Spaces	None	36 inches to 60 inches	Greater than 80 inches	Less than 0.25 inches	No	2.0 Greater than 2%	2.0	1.0	52	69
6416	0	12/9/2015	Sandt DOT	New London	Rt 114	South-West	Unknown	Asphalt	Good	Yes	Granite	Good	No	5.0 Parking Spaces	None	36 inches to 60 inches	Greater than 80 inches	Less than 0.25 inches	No	2.0 Greater than 2%	1.0	1.0	52	69
6610	0	12/16/2015	Sandt DOT	Tilton	Rt 3	North	Unknown	Asphalt	Good	Yes	None	Fair	No	0.0 None	None	36 inches to 60 inches	Greater than 80 inches	Less than 0.25 inches	No	6.0 Greater than 2%	0.0	1.0	52	69
6614	0	12/16/2015	Sandt DOT	Tilton	Rt 3	South	Unknown	Asphalt	Fair	Yes	Concrete	Poor	No	2.0 Grass Strip	None	36 inches to 60 inches	Greater than 80 inches	Less than 0.25 inches	No	5.0 Less than or equal to 2%	0.0	1.0	52	69
6637	0	12/17/2015	Nichols district 1	Lisbon	Rte 302	East	Unknown	Asphalt	Fair	Yes	Asphalt	Fair	No	5.0 Bicycle Lane	None	36 inches to 60 inches	Greater than 80 inches	Less than 0.25 inches	No	1.0 Less than or equal to 2%	2.0	1.0	52	69
6730	0	12/24/2015	Sandt DOT	New London	Rt 114	South	Unknown	Asphalt	Good	Yes	Granite	Good	No	5.0 Parking Spaces	None	36 inches to 60 inches	Greater than 80 inches	Less than 0.25 inches	No	2.0 Greater than 2%	3.0	1.0	52	69
7859	0	1/14/2016	Wilkinson District 1	Lincoln	Rte 112	North-West	Unknown	Asphalt	Good	Yes	Granite	Good	No	4.0 Parking Spaces	None	36 inches to 60 inches	Greater than 80 inches	Less than 0.25 inches	No	3.0 Greater than 2%	6.0	1.0	52	69
7860	0	1/14/2016	Wilkinson District 1	Lincoln	Rte 112	North-West	Unknown	Asphalt	Good	Yes	Granite	Good	No	4.0 Parking Spaces	None	36 inches to 60 inches	Greater than 80 inches	Less than 0.25 inches	No	3.0 Greater than 2%	6.0	1.0	52	69
7861	0	1/14/2016	Wilkinson District 1	Lincoln	Rte 112	North-West	Unknown	Asphalt	Good	Yes	Granite	Good	No	4.0 Parking Spaces	None	36 inches to 60 inches	Greater than 80 inches	Less than 0.25 inches	No	3.0 Greater than 2%	4.0	1.0	52	69
7864	0	1/14/2016	Wilkinson District 1	Lincoln	Rte 112	North-West	Unknown	Asphalt	Good	Yes	Granite	Good	No	4.0 Parking Spaces	None	36 inches to 60 inches	Greater than 80 inches	Less than 0.25 inches	No	4.0 Greater than 2%	2.0	1.0	52	69
7865	0	1/14/2016	Wilkinson District 1	Lincoln	Rte 112	South-East	Unknown	Asphalt	Good	Yes	Granite	Good	No	4.0 Parking Spaces	None	36 inches to 60 inches	Greater than 80 inches	Less than 0.25 inches	No	3.0 Greater than 2%	7.0	1.0	52	69
7867	0	1/14/2016	Wilkinson District 1	Lincoln	Rte 112	North-West	Unknown	Asphalt	Good	Yes	Granite	Good	No	4.0 Parking Spaces	None	36 inches to 60 inches	Greater than 80 inches	Less than 0.25 inches	No	5.0 Greater than 2%	13.0	1.0	52	69
7922	0	1/28/2016	Nichols district 1	Franconia	Rte 142	North-East	Unknown	Asphalt	Fair	Yes	Granite	Fair	No	3.0 Bicycle Lane	None	36 inches to 60 inches	Greater than 80 inches	Less than 0.25 inches	No	6.0 Less than or equal to 2%	0.0	1.0	52	69
10130	0	3/30/2016	Sandt DOT	Plaistow	Main Street	East	Unknown	Asphalt	Good	No	Granite	Good	No	5.00000000000	None	less than 36 inches	Greater than 80 inches	Less than 0.25 inches	No	2.0 Less than or equal to 2%	3.0	1.0	52	69
4555	41528	9/17/2015	Sandt DOT	Newport	Rt 10	East	Unknown	Concrete	Good	Yes	Granite	Good	No	4.0 None	Utility Pole	Greater than 60 inches	Unlimited	Less than 0.25 inches	No	15.0 Greater than 2%	1.0	1.0	51	70
4558	41531	9/17/2015	Sandt DOT	Newport	Rt 10	West	Unknown	Brick	Good	No	Granite	Good	No	4.0 None	None	Greater than 60 inches	Unlimited	Less than 0.25 inches	No	15.0 Greater than 2%	0.0	1.0	51	70
807	3174	7/20/2015	Sandt DOT	Chichester	US 202	North	Unknown	Asphalt	Good	No	Granite	Good	No	7.0 Grass Strip	Vegetation	less than 36 inches	Unlimited	Level	Yes	3.0 Greater than 2%	5.0	1.0	51	70
4785	41758	10/12/2015	Sandt DOT	Rye	Ocean Blvd.	Southeast	Unknown	Asphalt	Good	No	None	N/A	No	0.0 None	Vegetation	36 inches to 60 inches	Unlimited	Level	No	10.0 Less than or equal to 2%	0.0	1.0	51	70
4673	41646	9/30/2015	Sandt DOT	Conway	Main Street	Northeast	Unknown	Concrete	Good	No	Granite	Good	No	6.0 None	None	36 inches to 60 inches	Greater than 80 inches	Less than 0.25 inches	Yes	1.5 Less than or equal to 2%	14.0	1.0	51	70
4674	41647	9/30/2015	Sandt DOT	Conway	Main Street	Northeast	Unknown	Concrete	Good	No	Granite	Good	No	6.0 None	None	36 inches to 60 inches	Greater than 80 inches	Less than 0.25 inches	Yes	2.0 Greater than 2%	3.0	1.0	51	70
4675	41648	9/30/2015	Sandt DOT	Conway	Main Street	Southwest	Unknown	Concrete	Good	No	Granite	Good	No	6.0 None	None	36 inches to 60 inches	Greater than 80 inches	Less than 0.25 inches	Yes	2.0 Greater than 2%	1.0	1.0	51	70
6322	0	12/7/2015	Nichols district 1	Groveton	Rte 3	South	Unknown	Concrete	Fair	No	Granite	Fair	No	2.0 Parking Spaces	Utility Pole	36 inches to 60 inches	Greater than 80 inches	Less than 0.25 inches	Yes	2.0 Less than or equal to 2%	2.0	1.0	51	70
698	2197	7/10/2015	Sandt DOT	Nashua	Amherst Street	North	Unknown	Asphalt	Good	No	Granite	Good	No	7.0 None	None	36 inches to 60 inches	Unlimited	Greater than 0.50 inches	Yes	1.0 Less than or equal to 2%	0.0	1.0	50	71
4236	41205	8/7/2015	Sandt DOT	Goffstown	Main Street	West	Unknown	Asphalt	Good	No	Granite	Good	No	5.0 None	Utility Pole	36 inches to 60 inches	Unlimited	Level	Yes	2.0 Less than or equal to 2%	1.0	1.0	50	71
4565	41538	9/18/2015	Sandt DOT	Newport	Kunz Street	East	Unknown	Asphalt	Good	No	None	N/A	No	0.0 None	None	36 inches to 60 inches	Unlimited	Greater than 0.50 inches	Yes	4.0 Less than or equal to 2%	0.0	1.0	50	71
6624	0	12/17/2015	Wilkinson District 1	Pike	Rte. 25	North	Unknown	Asphalt	Fair	No	Granite	Good	No	4.0 Bicycle Lane	None	36 inches to 60 inches	Greater than 80 inches	Greater than 0.50 inches	No	2.0 Greater than 2%	1.0	1.0	50	71
10111	0	3/18/2016	Sandt DOT	Plaistow	Rt 125	West	Unknown	Asphalt	Good	No	Granite	Good	No	4.00000000000	Grass Strip	None	Unlimited	Greater than 0.50 inches	Yes	5.0 Less than or equal to 2%	5.0	1.0	50	71
6746	0	12/22/2015	Nichols district 1	Woodsville	Rte 302	South	Unknown	Asphalt	Fair

4651	41624	9/28/2015	Sandt DOT	Farmington	Main Street	West	Unknown	Asphalt	Good	Yes	Granite	Good	No	5.0	Parking Spaces	None	36 inches to 60 inches	Greater than 80 inches	Level	No	0.0	Greater than 2%	1.0	1.0	48	72
4727	41700	10/5/2015	Sandt DOT	Rollinsford	Main Street	South	Unknown	Asphalt	Good	No	Granite	Good	No	4.0	None	None	36 inches to 60 inches	Greater than 80 inches	Level	No	9.0	Greater than 2%	3.0	1.0	48	72
4796	41769	10/12/2015	Sandt DOT	New Castle	Wentworth Road	Northwest	Unknown	Asphalt	Good	Yes	Granite	Good	No	6.0	None	None	36 inches to 60 inches	Greater than 80 inches	Level	No	3.0	Greater than 2%	0.0	1.0	48	72
4862	42675	10/22/2015	Wilkinson dist 1	Pittsburgh	Rte 3	North	Unknown	Asphalt	Good	No	None	N/A	No	0.0	Grass Strip	None	36 inches to 60 inches	Greater than 80 inches	Level	No	15.3	Greater than 2%	1.0	1.0	48	72
4888	42701	10/23/2015	Sandt DOT	Newmarket	Main Street	South	Unknown	Asphalt	Good	Yes	Granite	Good	No	6.0	None	None	36 inches to 60 inches	Greater than 80 inches	Level	No	2.0	Greater than 2%	3.0	1.0	48	72
4889	42702	10/23/2015	Sandt DOT	Newmarket	Main Street	South	Unknown	Asphalt	Good	Yes	Granite	Good	No	6.0	None	None	36 inches to 60 inches	Greater than 80 inches	Level	No	4.0	Greater than 2%	17.0	1.0	48	72
4890	42703	10/23/2015	Sandt DOT	Newmarket	Main Street	South	Unknown	Asphalt	Good	Yes	Granite	Good	No	6.0	None	None	36 inches to 60 inches	Greater than 80 inches	Level	No	2.0	Greater than 2%	3.0	1.0	48	72
4891	42704	10/23/2015	Sandt DOT	Newmarket	Main Street	South	Unknown	Asphalt	Good	Yes	Granite	Good	No	6.0	None	None	36 inches to 60 inches	Greater than 80 inches	Level	No	6.0	Greater than 2%	0.0	1.0	48	72
5009	42904	10/27/2015	Wilkinson District 1	Colebrook	Rte. 3	Northwest	Unknown	Asphalt	Fair	Yes	None	Good	No	0.0	Grass Strip	None	36 inches to 60 inches	Greater than 80 inches	Level	No	1.0	Less than or equal to 2%	0.0	1.0	48	72
5270	0	11/24/2015	Sandt DOT	Moultonborough	Moultonborough Neck Road	South	Unknown	Asphalt	Good	Yes	None	N/A	No	0.0	Grass Strip	None	36 inches to 60 inches	Greater than 80 inches	Level	No	2.0	Greater than 2%	0.0	1.0	48	72
5271	0	11/24/2015	Sandt DOT	Moultonborough	Moultonborough Neck Road	South-West	Unknown	Asphalt	Good	Yes	None	N/A	No	0.0	Grass Strip	None	36 inches to 60 inches	Greater than 80 inches	Level	No	2.0	Greater than 2%	0.0	1.0	48	72
5272	0	11/24/2015	Sandt DOT	Moultonborough	Moultonborough Neck Road	South-West	Unknown	Asphalt	Good	Yes	None	N/A	No	0.0	Grass Strip	None	36 inches to 60 inches	Greater than 80 inches	Level	No	3.0	Greater than 2%	0.0	1.0	48	72
5273	0	11/24/2015	Sandt DOT	Moultonborough	Moultonborough Neck Road	South	Unknown	Asphalt	Good	Yes	None	N/A	No	0.0	Grass Strip	None	36 inches to 60 inches	Greater than 80 inches	Level	No	3.0	Greater than 2%	0.0	1.0	48	72
6160	0	11/25/2015	Sandt DOT	Alton	Rt 11	East	Unknown	Asphalt	Good	No	Granite	Good	No	4.0	Grass Strip	None	36 inches to 60 inches	Greater than 80 inches	Level	No	9.0	Greater than 2%	14.0	1.0	48	72
6161	0	11/25/2015	Sandt DOT	Alton	Rt 11	West	Unknown	Asphalt	Good	Yes	Granite	Good	No	4.0	None	None	36 inches to 60 inches	Greater than 80 inches	Level	No	6.0	Greater than 2%	0.0	1.0	48	72
6162	0	11/25/2015	Sandt DOT	Alton	Rt 11	West	Unknown	Asphalt	Good	Yes	None	N/A	No	0.0	None	None	36 inches to 60 inches	Greater than 80 inches	Level	No	6.0	Greater than 2%	0.0	1.0	48	72
6163	0	11/25/2015	Sandt DOT	Alton	Rt 11	East	Unknown	Asphalt	Good	Yes	Granite	Good	No	5.0	None	None	36 inches to 60 inches	Greater than 80 inches	Level	No	9.0	Greater than 2%	9.0	1.0	48	72
6263	0	12/4/2015	Sandt DOT	Plymouth	Rt 3	West	Unknown	Asphalt	Good	Yes	Granite	Good	No	6.0	Parking Spaces	None	36 inches to 60 inches	Greater than 80 inches	Level	No	5.0	Greater than 2%	3.0	1.0	48	72
6268	0	12/4/2015	Sandt DOT	Plymouth	Rt 3	West	Unknown	Asphalt	Good	Yes	Granite	Good	No	6.0	Parking Spaces	None	36 inches to 60 inches	Greater than 80 inches	Level	No	3.0	Greater than 2%	0.0	1.0	48	72
6452	0	12/10/2015	Sandt DOT	Laconia	Rt 3	South	Unknown	Asphalt	Good	No	Granite	Good	No	5.0	Grass Strip	None	36 inches to 60 inches	Greater than 80 inches	Level	No	12.0	Greater than 2%	0.0	1.0	48	72
6476	0	12/14/2015	Sandt DOT	Bristol	3A	East	Unknown	Asphalt	Good	Yes	None	N/A	No	0.0	None	None	36 inches to 60 inches	Greater than 80 inches	Level	No	2.0	Greater than 2%	0.0	1.0	48	72
6477	0	12/14/2015	Sandt DOT	Bristol	3A	East	Unknown	Asphalt	Good	Yes	None	N/A	No	0.0	None	None	36 inches to 60 inches	Greater than 80 inches	Level	No	2.0	Greater than 2%	0.0	1.0	48	72
6478	0	12/14/2015	Sandt DOT	Bristol	3A	East	Unknown	Asphalt	Good	Yes	None	N/A	No	0.0	None	None	36 inches to 60 inches	Greater than 80 inches	Level	No	2.0	Greater than 2%	0.0	1.0	48	72
6479	0	12/14/2015	Sandt DOT	Bristol	3A	North-East	Unknown	Asphalt	Good	Yes	Granite	Good	No	5.0	None	None	36 inches to 60 inches	Greater than 80 inches	Level	No	2.0	Greater than 2%	3.0	1.0	48	72
6507	0	12/14/2015	Patch district 1	Littleton	Rte 302	South	Unknown	Asphalt	Good	No	Granite	Good	No	6.0	Grass Strip	None	36 inches to 60 inches	Greater than 80 inches	Level	No	9.0	Greater than 2%	2.0	1.0	48	72
6560	0	12/15/2015	Sandt DOT	Tilton	School Street	East	Unknown	Asphalt	Good	Yes	None	N/A	No	0.0	Grass Strip	None	36 inches to 60 inches	Greater than 80 inches	Level	No	2.0	Greater than 2%	0.0	1.0	48	72
6683	0	12/22/2015	NM SWRPC	Troy	Rt 12	East	Unknown	Asphalt	Fair	Yes	Granite	Poor	No	0.5	None	None	36 inches to 60 inches	Greater than 80 inches	Level	No	4.0	Less than or equal to 2%	4.0	1.0	48	72
6703	0	12/23/2015	Sandt DOT	Andover	Rt 4	South	Unknown	Asphalt	Good	Yes	Granite	Good	No	4.0	None	None	36 inches to 60 inches	Greater than 80 inches	Level	No	3.0	Greater than 2%	0.0	1.0	48	72
6706	0	12/23/2015	Sandt DOT	Andover	Rt 4	South	Unknown	Asphalt	Good	Yes	Granite	Good	No	4.0	None	None	36 inches to 60 inches	Greater than 80 inches	Level	No	5.0	Greater than 2%	0.0	1.0	48	72
6742	0	12/28/2015	NM SWRPC	Hinsdale	School st	East	Unknown	Asphalt	Good	No	Granite	Good	No	5.0	None	None	36 inches to 60 inches	Greater than 80 inches	Level	No	16.0	Greater than 2%	1.0	1.0	48	72
9003	0	2/22/2016	Sandt DOT	Laconia	Rt 3	North	Unknown	Asphalt	Good	No	Granite	Good	No	4.0	Grass Strip	None	36 inches to 60 inches	Greater than 80 inches	Level	No	12.0	Greater than 2%	0.0	1.0	48	72
10129	0	3/30/2016	Sandt DOT	Plaistow	Main Street	East	Unknown	Asphalt	Good	No	Granite	Good	No	5.00000000000	None	Fixed Object	less than 36 inches	Greater than 80 inches	Level	No	5.0	Less than or equal to 2%	4.0	1.0	48	72
4554	41527	9/17/2015	Sandt DOT	Newport	Rt 10	East	Unknown	Asphalt	Good	No	Granite	Good	No	6.0	Parking Spaces	None	Greater than 60 inches	Unlimited	Level	No	10.0	Greater than 2%	4.0	1.0	47	72
706	2205	7/13/2015	Sandt DOT	Nashua	Main Street	West	Unknown	Asphalt	Good	Yes	Granite	Good	No	3.0	None	None	36 inches to 60 inches	Unlimited	0.25 inches to 0.50 inches	No	2.0	Less than or equal to 2%	1.0	1.0	47	72
4540	41513	9/16/2015	Sandt DOT	Goshen	Rt 10	East	Unknown	Concrete	Good	Yes	Granite	Good	No	7.0	None	None	36 inches to 60 inches	Unlimited	0.25 inches to 0.50 inches	No	0.0	Less than or equal to 2%	0.0	1.0	47	72
4541	41514	9/16/2015	Sandt DOT	Goshen	Rt 10	West	Unknown	Concrete	Good	Yes	Granite	Good	No	3.0	None	None	36 inches to 60 inches	Unlimited	0.25 inches to 0.50 inches	No	4.0	Less than or equal to 2%	0.0	1.0	47	72
4902	42715	10/26/2015	Sandt DOT	New Hampton	Ocean Blvd	East	Unknown	Concrete	Good	Yes	None	N/A	No	0.0	Grass Strip	Water	36 inches to 60 inches	Unlimited	Less than 0.25 inches	No	4.0	Less than or equal to 2%	0.0	1.0	47	72
411	855	4/30/2015	Srpc tom	Newmarket	108	East	Unknown	Concrete	Good	No	Granite	Good	No	7.0	Parking Spaces	Fixed Object	36 inches to 60 inches	Greater than 80 inches	Level	No	4.0	Greater than 2%	1.0	1.0	47	72
7948	0	1/28/2016	Wilkinson District 1	Franconia	Rte. 116	East	Unknown	Concrete	Good	No	Granite	Good	No	6.0	Bicycle Lane	None	36 inches to 60 inches	Greater than 80 inches	Level	Yes	2.0	Greater than 2%	0.0	1.0	47	72
4846	42659	10/20/2015	Sandt DOT	Newfields	College Road	Northeast	Unknown	Asphalt	Good	No	Granite	Good	No	7.0	None	Vegetation	36 inches to 60 inches	Unlimited	Greater than 0.50 inches	No	3.0	Less than or equal to 2%	Greater than 0.50	1.0	46	73
4768	41741	10/8/2015	Sandt DOT	Durham	Main Street	North	Unknown	Concrete	Good	Yes	Granite	Good	No	3.0	Parking Spaces	Moveable Objects	Greater than 60 inches	Greater than 80 inches	Level	No	3.0	Greater than 2%	2.0	1.0	46	73
4769	41742	10/8/2015	Sandt DOT	Durham	Main Street	North	Unknown	Concrete	Yes	Yes	Granite	Good	No	5.0	Parking Spaces	Moveable Objects	Greater than 60 inches	Greater than 80 inches	Level	No	4.0	Greater than 2%	0.0	1.0	46	73
6751	0	12/31/2015	Nichols district 1	Woodsville	Rte 302	South	Unknown	Asphalt	Fair	Yes	None	N/A	No	0.0	Grass Strip	None	Greater than 60 inches	Greater than 80 inches	0.25 inches to 0.50 inches	No	6.5	Less than or equal to 2%	0.0	1.0	46	73
4243	41212	8/7/2015	Sandt DOT	Goffstown	Main Street	East	Unknown	Asphalt	Good	Yes	Granite	Good	No	5.0	None	None	36 inches to 60 inches	Greater than 80 inches	0.25 inches to 0.50 inches	No	2.0	Less than or equal to 2%	0.0	1.0	46	73
4374	41346	8/20/2015	Sandt DOT	Peterborough	Grove Street	West	Unknown	Concrete	Good	Yes	Granite	Good	No	5.0	Parking Spaces	None	36 inches to 60 inches	Greater than 80 inches	Less than 0.25 inches	No	1.0	Less than or equal to 2%	1.0	1.0	46	73
4386	41358	8/24/2015	Sandt DOT	Dublin	Main Street	South	Unknown	Concrete	Good	No	Granite	Good	No	6.0	None	Moveable Objects	36 inches to 60 inches	Greater than 80 inches	Level	No	9.0	Less than or equal to 2%	15.0	1.0	46	73
4389	41361	8/24/2015	Sandt DOT	Jaffrey	Main Street	North	Unknown	Concrete	Good	Yes	Granite	Good	No	3.0	Parking Spaces	None	36 inches to 60 inches	Greater than 80 inches	Less than 0.25 inches	No	2.0	Less than or equal to 2%	2.0	1.0	46	73
4506	41479	9/4/2015	Sandt DOT	Marlborough	Jaffrey Road	West	Unknown	Asphalt	Good	Yes	None	N/A	No	0.0	None	None	36 inches to 60 inches	Greater than 80 inches	0.25 inches to 0.50 inches	No	4.0	Less than or equal to 2%	0.0	1.0	46	73
4672	41645	9/29/2015	Sandt DOT	Northwood	Rt 4	Northeast	Unknown	Asphalt	Good	No	Granite	Good	No	3.0	None	Vegetation	36 inches to 60 inches	Less than 80in	0.25 inches to 0.50 inches	No	2.0	Less than or equal to 2%	6.0	1.0	46	73
5008	42903	10/27/2015	Wilkinson District 1	Colebrook	Rte. 3	West	Unknown	Asphalt	Poor	No	Granite	Good	No	6.0	None	None	36 inches to 60 inches	Greater than 80 inches	0.25 inches to 0.50 inches	No	1.0	Less than or equal to 2%	3.0	1.0	46	73
6434	0	12/10/2015	Nichols district 1	Gilman	Bridge hill road	East	Unknown	Asphalt	Good	Yes	None	N/A	No	4.0	Bicycle Lane	None	36 inches to 60 inches	Greater than 80 inches	0.25 inches to 0.50 inches	No	1.5	Less than or equal to 2%	0.0	1.0	46	73
9005	0	2/22/2016	Wilkinson district 1	Conway	Rte 113	South	Unknown	Asphalt	Good	Yes	None	N/A	No	0.0	Grass Strip	None	36 inches to 60 inches	Greater than 80 inches	0.25 inches to 0.50 inches	No	3.0	Less than or equal to 2%	0.0	1.0	46	73
9036	0	3/11/2016	Sandt DOT	Windham	ISSN	East	Unknown	Concrete	Good	Yes	Concrete	Fair	No	6.00000000000	Grass Strip	None	36 inches to 60 inches	Greater than 80 inches	Less than 0.25 inches	No	5.0	Less than or equal to 2%	0.0	1.0	46	73
9101	0	3/17/2016	Wilkinson District 1	Woodstock	Rte. 3	West	Unknown	Asphalt	Good	Yes	Granite	Good	No	4.00000000000	None	None	36 inches to 60 inches	Greater than 80 inches	0.25 inches to 0.50 inches	No	2.0	Less than or equal to 2%	1.0	1.0	46	73
10109	0	3/21/2016	Nichols district 1	Bartlett	Rte 302	South	Unknown	Concrete	Good	Yes	Granite	Good	No	6.00000000000	Bicycle Lane	None	36 inches to 60 inches	Greater than 80 inches	Less than 0.25 inches	No	1.0	Less than or equal to 2%	0.0	1.0	46	73
6354	0	12/8/2015	Nichols district 1	Lancaster	Rte 2	North	Unknown	Asphalt	Good	No	None	N/A	Yes	0.0	Grass Strip	None	36 inches to 60 inches	Less than 80in	Less than 0.25 inches	Yes	5.0	Less than or equal to 2%	0.0	1.0	46	73
5213	0	11/23/2015	Sandt DOT	Wolfeboro	Rt 109	North	Unknown	Asphalt	Good	Yes	Granite	Good	No	3.0	Parking Spaces	None	Greater than 60 inches	Unlimited	Level	Yes	2.0	Less than or equal to 2%	2.0	1.0	45	74
556	2055	6/26/2015	Sandt DOT	Manchester	Daniel Webster Hwy	Southeast	Unknown	Asphalt	No	No	Granite	Good	No	5.0	None	Utility Pole	less than 36 inches	Unlimited	Level	No	0.0	Less than or equal to 2%	0.0	1.0	45	74
675	2174	7/9/2015	Sandt DOT	Merrimack	Daniel Webster Hwy	West	Unknown	Asphalt	Good	Yes	Granite	Good	No	6.0	None	None	36 inches to 60 inches	Unlimited	Level	No	6.0	Greater than 2%	1.0	1.0	45	74
795	2294	7/17/2015	Sandt DOT	Pittsfield	Main Street	South	Unknown	Asphalt	Good	Yes	Granite	Good	No	6.0	None	None	36 inches to 60 inches	Unlimited	Level	No	3.0	Greater than 2%	0.0	1.0	45	74
823	3191	7/22/2015	Sandt DOT	Londonderry	Nashua Road	North	Unknown	Asphalt	Good	Yes	Granite	Good	No	4.0	None	None	36 inches to 60 inches	Unlimited	Level	No	4.0	Greater than 2%	0.0	1.0	45	74
824	3192	7/22/2015	Sandt DOT	Londonderry	Nashua Road	North	Unknown	Asphalt	Good	Yes	Granite	Good	No	4.0	None	None	36 inches to 60 inches	Unlimited	Level	No	6.0	Greater than 2%	0.0	1.0	45	74
825	3193	7/22/2015	Sandt DOT	Londonderry	Nashua Road	North	Unknown	Asphalt	Good	Yes	Granite	Good	No	4.0	None	None	36 inches to 60 inches	Unlimited	Level	No	4.0	Greater than 2%	0.0	1.0	45	74
826	3194	7/22/2015	Sandt DOT	Londonderry	Nashua Road	North	Unknown	Asphalt	Good	Yes	Granite	Good	No	4.0	None	None	36 inches to 60 inches	Unlimited	Level	No	4.0	Greater than 2%	0.0	1.0	45	74
4177	6546	7/30/2015	Sandt DOT	Milford	Nashua Street	South	Unknown	Asphalt	Good	Yes	Granite	Good	No	5.0	None	None	36 inches to 60 inches	Unlimited	Level	No	3.9	Greater than 2%	0.0	1.0	45	74
4231	41200	8/6/2015	Sandt DOT	Concord	I93 slip road	South	Unknown	Asphalt	Good	No	Granite	Good	No	5.0	None	None	less than 36 inches	Unlimited	Greater than 0.50 inches	No	1.0	Less than or equal to 2%	0.0	1.0	45	74
4244	41213	8/7/2015	Sandt DOT	Goffstown	Main Street	East	Unknown	Asphalt	Good	Yes	Granite	Good	No	5.0	None	None	36 inches to 60 inches	Unlimited	Level	No	3.0	Greater than 2%	0.0	1.0	45	74
4318	41290	8/14/2015	Sandt DOT	Wilton	Maple Street	North	Unknown	Asphalt	Good	No	Granite	Good	No	6.0	None	None	36 inches to 60 inches	Unlimited	Level	No	10.0	Greater than 2%	3.0	1.0	45	74
4340	41312	8/17/2015	Sandt DOT	Antrim	Main Street	West	Unknown	Asphalt	Good	Yes	Granite	Good	No	4.0	Parking Spaces	None	36 inches to 60 inches	Unlimited	Level	No	0.0	Greater than 2%	5.0	1.0	45	74
4381	41353	8/20/2015	Sandt DOT	Greenville	Dunster Avenue	South	Unknown	Asphalt	Good	No	Granite	Good	No	4.0	None	None	36 inches to 60 inches	Unlimited	Level	No	11.0	Greater than 2%	3.0	1.0	45	74
4573	41546	9/18/2015	Sandt DOT	Plainfield	Main Street	North	Unknown	Asphalt	Good	Yes	Granite	Good	No	7.0	Grass Strip	None	36 inches to 60 inches	Unlimited	Level	No	3.0	Greater than 2%	0.0	1.0	45	74
4647	41620	9/28/2015	Sandt DOT	Farmington	Main Street	East	Unknown	Asphalt	Good	Yes	Granite	Good	No	2.0	Parking Spaces	None	36 inches to 60 inches	Unlimited	Level	No	2.0	Greater than 2%	1.0	1.0	45	74
4648	41621	9/28/2015	Sandt DOT	Farmington	Main Street	East	Unknown	Asphalt	Good	Yes	Granite	Good	No	4.0	Parking Spaces	None	36 inches to 60 inches	Unlimited	Level	No	3.0	Greater than 2%	1.0	1.0	45	74
4682	41655	10/1/2015	Sandt DOT	Rochester	N Main	Northeast	Unknown	Asphalt	Good	Yes	Granite	Good	No	5.0	None	None	36 inches to 60 inches	Unlimited	Level	No	1.0	Greater than 2%	1.0	1.0	45	74
4822	41795	10/15/2015	Sandt DOT	Stratham	Rt 108	Northwest	Unknown	Asphalt	Good	Yes	Granite	Good	No	5.0	None	None	36 inches to 60 inches	Unlimited	Level	No	3.0	Greater than 2%	0.0	1.0	45	74
4823	41796	10/15/2015	Sandt DOT	Stratham	Rt 108	West	Unknown	Asphalt	Good	Yes	Granite	Good	No	5.0	None	None	36 inches to 60 inches	Unlimited	Level	No	3.0	Greater than 2%	0.0	1.0	45	74
4824	41797	10/15/2015	Sandt DOT	Stratham	Rt 108	West	Unknown	Asphalt	Good	Yes	Granite	Good	No	5.0	None	None	36 inches to 60 inches	Unlimited	Level	No	3.0	Greater than 2%	4.0	1.0	45	74
4913	42726	10/26/2015	Sandt DOT	Hampton	Ocean Blvd	East	Unknown	Asphalt	Good	Yes	Granite	Good	No	2.0	None	None	36 inches to 60 inches	Unlimited	Level	No	1.0	Greater than 2%	4.0	1.0	45	74
5278	0	11/24/2015	Sandt DOT	Moultonborough	Moultonborough Neck Road	North-East	Unknown	Asphalt	Good	Yes	None	N/A	No	0.0	Grass Strip	None	36 inches to 60 inches	Unlimited	Level	No	3.0	Greater than 2%	1.0	1.0	45	74
6794	0	1/7/2016	Sandt DOT	Tilton	Rt 3	South	Unknown	Asphalt	Good	Yes	Granite	Good	No	6.0	None	None	36 inches to 60 inches	Unlimited	Level	No	1.0	Greater than 2%	0.0	1.0	45	74
6248	0	12/3/2015	Sandt DOT	Holderness	Bridge Street	South	Unknown	Concrete	Good	No	Granite	Good	No	6.0	None	None	Greater than 60 inches	Greater than 80 inches	0.25 inches to 0.50 inches	Yes	2.0	Greater than 2%	0.0	1.0	45	74
6249	0	12/3/2015	Sandt DOT	Plymouth	Bridge Street	South	Unknown	Brick	Brick	No	Granite	Good	No	6.0	None	None	Greater than 60 inches	Greater than 80 inches	Level	Yes	2.0	Greater than 2%	1.0	1.0	45	74
6250	0	12/3/2015	Sandt DOT	Plymouth	Bridge Street	North	Unknown	Brick	Brick	No	Granite	Good	No	6.0	None	None	Greater than 60 inches	Greater than 80 inches	Level	Yes	2.0	Greater than 2%	1.0	1.0	45	74
6264	0	12/4/2015	Sandt DOT	Plymouth	Bridge Street	South	Unknown	Brick	Brick	No	Granite	Good	No	6.0	None	None	Greater than 60 inches	Greater than 80 inches	Level	Yes	2.0	Greater than 2%	1.0	1.0	45	74
6265	0	12/4/2015	Sandt DOT	Plymouth	Bridge Street	North	Unknown	Brick	Good	No	Granite	Good	No	6.0	None	None	Greater than 60 inches	Greater than 80 inches	Level	Yes	2.0	Greater than 2%	1.0	1.0	45	74
6266	0	12/4/2015	Sandt DOT	Plymouth	High Street	South	Unknown	Brick	Good	No	Granite	Good	No	6.0	None	None	Greater than 60 inches	Greater than 80 inches	Level	Yes	2.0	Greater than 2%	1.0	1.0	45	74
6267	0	12/4/2015	Sandt DOT	Plymouth	High Street	North	Unknown	Brick	Brick	No	Granite	Good	No	6.0	None	None	Greater than 60 inches	Greater than 80 inches	Level	Yes	2.0	Greater than 2%	1.0	1.0	45	74
7975	0	2/9/2016	Wilkinson District 1	Conway	Rte. 16 and 302	West	Unknown	Brick	Good	No	Granite	Good	No	6.0	Parking Spaces	None	Greater than 60 inches	Greater than 80 inches	Greater than 0.50 inches	No	1.0	Less than or equal to 2%	4.0	1.0	45	74
5017	42912	10/27/2015	Wilkinson District 1	Colebrook	Rt. 3	Northwest	Unknown	Concrete	Good	No	Granite	Good	No	3.0	Parking Spaces	Utility Pole	36 inches to 60 inches	Greater than 80 inches	0.25 inches to 0.50 inches	No	4.0	Less than or equal to 2%	1.0	1.0	45	74
5148	0	11/18/2015	Sandt DOT	Ossipee	Rt 171	South	Unknown	Concrete	Fair	No	Granite	Good	No	5.0	Parking Spaces	None	36 inches to 60 inches	Greater than 80 inches	0.25 inches to 0.50 inches	No	1.0	Greater than 2%	0.0	1.0	45	74
7972	0	2/8/2016	Wilkinson District 1	Conway	Rte. 16 and 302	West	Unknown	Brick	Good	No	Granite	Good	No	6.0	Parking Spaces	None	36 inches to 60 inches	Greater than 80 inches	Greater than 0.50 inches	No	2.0	Less than or equal to 2%	1.0	1.0	45	74
4277	41248	8/12/2015	Sandt DOT	Amherst	Amherst Street/Milford Road	North	Unknown	Asphalt	Good	No	Granite	Good	No	4.0	None	Utility Pole	36 inches to 60 inches	Unlimited	Less than 0.25 inches	No	5.0	2.0 Greater than 2%	5.0	1.0	44	74
4702	41675	10/2/2015	Sandt DOT	Rochester	N Main St	Northeast	Unknown	Concrete	Good	No	Granite	Good	No	6.0	Parking Spaces	Utility Pole	36 inches to 60 inches	Unlimited	Level	No	2.0	Greater than 2%	4.0	1.0	44	74
9083	0	3/16/2016	Sandt DOT	Plaistow	Rt 125	West	Unknown	Asphalt	Good	No	Granite	Good	No	5.00000000000	None	None	36 inches to 60 inches	Unlimited	Less than 0.25 inches	Yes	4.0	Greater than 2%	3.0	1.0	44	74
4282	41253	8/13/2015	Sandt DOT	Nashua	Amherst Street	South	Unknown	Asphalt	Good	No	None	N/A	No	5.0	None	Vegetation	less than 36 inches	Greater than 80 inches	Level	No	1.0	Less than or equal to 2%	1.0	0.0	44	74
569	2068	6/26/2015	MC SWRPC	North Walpole	Kinny Street	South	Unknown	Concrete	Poor	No	None	N/A	No	1.8	None	None	36 inches to 60 inches	Unlimited	Less than 0.25 inches	No	1.0	Less than or equal to 2%	1.0	1.0	43	75
679	2178	7/9/2015	Sandt DOT	Merrimack	Bedford Road	North	Unknown	Asphalt	Good	Yes	Granite	Good	No	4.0	None	None	36 inches to 60 inches	Unlimited	0.25 inches to 0.50 inches	Yes	4.7	Less than or equal to 2%	0.0	1.0	43	75
682	2181	7/9/2015	Sandt DOT	Merrimack	Greeley Street	North	Unknown	Concrete	Good	Yes	Granite	Good	No	2.0	None	None	36 inches to 60 inches	Unlimited	Less than 0.25 inches	No	0.0	Less than or equal to 2%	0.0	1.0	43	75
736	2235	7/13/2015	Sandt DOT	Nashua	Daniel Webster Hwy	Southwest	Unknown	Asphalt	Good	Yes	Granite	Good	No	5.0	None	None	36 inches to 60 inches	Unlimited	0.25 inches to 0.50 inches	No	2.0	Less than or equal to 2%	0.0	1.0	43	75
4210	41179	7/31/2015	Sandt DOT	Hennikor	Bridge Street	East	Unknown	Concrete	Good	Yes	Granite	Good	No	5.0	None	None	36 inches to 60 inches	Unlimited	Less than 0.25 inches	No	3.0	Less than or equal to 2%	0.0	1.0	43	75
4521	41494	9/14/2015	Sandt DOT	Charlestown	School Street	North	Unknown	Concrete	Good	Yes	None	N/A	No	0.0	Parking Spaces	None	36 inches to 60 inches	Unlimited	Less than 0.25 inches	No	2.0	Less than or equal to 2%	0.0	1.0	43	75
4525	41498	9/14/2015	Sandt DOT	Charlestown	School Street	South	Unknown	Concrete	Good	Yes	None	N/A	No	0.0	Parking Spaces	None	36 inches to 60 inches	Unlimited	Less than 0.25 inches	No	2.0	Less than or equal to 2%	0.0	1.0	43	75
7942	0	1/28/2016	Wilkinson District 1	Franconia	Rte. 117	North	Unknown	Concrete	Good	No	Concrete	Good	No	8.0	None	None	36 inches to 60 inches	Unlimited	Less than 0.25 inches	No	4.0	Less than or equal to 2%	0.0	1.0	43	75
6208	0	12/1/2015	Wilkinson District 1	Errol	Rte. 26	South-West	Unknown	Asphalt	Good	No	Granite	Good	No	6.0	Bicycle Lane	None	Greater than 60 inches	Greater than 80 inches	Greater than 0.50 inches	Yes	4.0	Less than or equal to 2%	1.0	1.0	43	75
507	1071	6/22/2015	Sandt DOT	Allenstown	Main	West	Unknown	Asphalt	Good	No	Granite	Good	No	5.0	Parking Spaces	None	36 inches to 60 inches	Greater than 80 inches	Greater than 0.50 inches	No	4.0	Greater than 2%	5.0	1.0	43	75
548	2047	6/25/2015	Sandt DOT	Hooksett	Mammoth	East	Unknown	Asphalt	Good	No	Granite	Good	No	4.0	Grass Strip	None	36 inches to 60 inches	Greater than 80 inches	Greater than 0.50 inches	No	3.0	Greater than 2%	7.0	1.0	43	75
5027	42922	11/2/2015	Wilkinson District 1	Colebrook	Rte 145	North	Unknown	Asphalt	Fair	No	None	N/A	No	0.0	Grass Strip	None	36 inches to 60 inches	Greater than 80 inches	Greater than 0.50 inches	No	3.6	Less than or equal to 2%	0.0	1.0	43	75
5261	0	11/24/2015	Nichols district 1	Gorham	Rte 2 and Rte 16	South	Unknown	Asphalt	Good	No	Granite	Fair	No	4.0	Parking Spaces	None	36 inches to 60 inches	Greater than 80 inches	Greater than 0.50 inches	No	1.0	Greater than 2%	4.0	1.0	43	75
6212	0	12/1/2015	Wilkinson District 1	Errol	Rte. 26	North-East	Unknown	Asphalt

6498	0	12/14/2015	Sandt DOT	Tilton	Rt 3	East	Unknown		Asphalt	Good	Yes	None	N/A	No		0.0	Grass Strip	None	36 inches to 60 inches	Greater than 80 inches	Less than 0.25 inches	No	3.0	Less than or equal to 2%	0.0	1.0	42	75
8976	0	2/10/2016	Wilkinson District 1	Conway	Rte. 16 and River Street	South	Unknown		Asphalt	Good	No	None	N/A	No		0.0	None	None	36 inches to 60 inches	Greater than 80 inches	Less than 0.25 inches	No	26.0	Less than or equal to 2%	0.0	1.0	42	75
10124	0	3/30/2016	Sandt DOT	Plaistow	Elm Street	North-West	Unknown		Asphalt	Good	No	Granite	Good	No	5.00000000000	None	Moveable Objects	less than 36 inches	Greater than 80 inches	Level	No	2.0	Greater than 2%	2.0	1.0	42	75
10134	0	3/30/2016	Sandt DOT	Plaistow	Main Street	West	Unknown		Asphalt	Good	Yes	None	N/A	No	0.00000000000	Grass Strip	None	36 inches to 60 inches	Greater than 80 inches	Less than 0.25 inches	No	3.0	Less than or equal to 2%	0.0	1.0	42	75
577	2076	6/26/2015	MC SWRPC	North Walpole	Ash Street	South	Unknown		Concrete	Fair	No	None	N/A	No		2.0	None	None	36 inches to 60 inches	Greater than 80 inches	Less than 0.25 inches	No	4.0	Greater than 2%	5.0	1.0	41	76
4185	34713	7/30/2015	Sandt DOT	Brookline	Bond Street	Northwest	Unknown		Concrete	Good	No	Granite	Good	No		6.0	Grass Strip	Utility Pole	36 inches to 60 inches	Greater than 80 inches	Less than 0.25 inches	No	4.0	Less than or equal to 2%	4.0	1.0	41	76
4513	41486	9/14/2015	Sandt DOT	Charlestown	Rt 12	East	Unknown		Concrete	Good	No	None	N/A	No		0.0	Grass Strip	Vegetation	36 inches to 60 inches	Greater than 80 inches	0.25 inches to 0.50 inches	No	3.0	Less than or equal to 2%	0.0	1.0	41	76
5029	42924	11/2/2015	Nichols district 1	Colebrook	Rte 26	South	Unknown		Asphalt	Fair	No	Granite	Fair	No		4.0	Parking Spaces	None	36 inches to 60 inches	Greater than 80 inches	0.25 inches to 0.50 inches	No	7.5	Greater than 2%	2.0	1.0	41	76
7852	0	1/14/2016	Nichols district 1	North haverhill	Rte 10	West	Unknown		Asphalt	Fair	No	None	N/A	No		0.0	Grass Strip	None	36 inches to 60 inches	Greater than 80 inches	0.25 inches to 0.50 inches	No	3.0	Greater than 2%	0.0	1.0	41	76
7853	0	1/14/2016	Nichols district 1	North haverhill	Rte 10	West	Unknown		Asphalt	Fair	No	None	N/A	No		0.0	Grass Strip	None	36 inches to 60 inches	Greater than 80 inches	0.25 inches to 0.50 inches	No	3.0	Greater than 2%	0.0	1.0	41	76
838	3206	7/22/2015	Sandt DOT	Derry	E Broadway	Southeast	Unknown		Asphalt	Good	No	Granite	Good	No		6.0	Grass Strip	Utility Pole	Greater than 60 inches	Unlimited	Level	Yes	1.0	Less than or equal to 2%	0.0	1.0	40	76
488	1052	6/17/2015	Sandt DOT	Pembroke	Broadway	West	Unknown		Asphalt	Good	No	Granite	Good	No		6.0	Grass Strip	None	36 inches to 60 inches	Unlimited	Greater than 0.50 inches	No	0.0	Greater than 2%	2.0	1.0	40	76
648	2147	7/6/2015	Sandt DOT	Manchester	S Willow Street	West	Unknown		Asphalt	Good	No	Granite	Good	No		4.0	None	None	36 inches to 60 inches	Unlimited	Greater than 0.50 inches	No	2.0	Greater than 2%	1.0	1.0	40	76
654	2153	7/6/2015	Sandt DOT	Manchester	S Willow Street	South	Unknown		Asphalt	Good	No	Granite	Good	No		6.0	None	None	36 inches to 60 inches	Unlimited	Greater than 0.50 inches	No	3.5	Greater than 2%	0.0	1.0	40	76
4711	41684	10/5/2015	Sandt DOT	Rochester	Washington Street	Southeast	Unknown		Asphalt	Good	No	Granite	Good	No		6.0	None	Utility Pole	36 inches to 60 inches	Unlimited	Level	No	6.0	Greater than 2%	1.0	1.0	40	76
4745	41718	10/6/2015	Sandt DOT	Dover	Knox Marsh Road	Southeast	Unknown		Asphalt	Good	No	Granite	Good	No		6.0	None	Fixed Object	36 inches to 60 inches	Unlimited	Level	No	3.0	Greater than 2%	1.0	1.0	40	76
5018	42913	10/27/2015	Wilkinson District 1	Colebrook	Rte. 3	Northwest	Unknown		Asphalt	Fair	No	Granite	Fair	No		4.0	Parking Spaces	None	36 inches to 60 inches	Unlimited	Greater than 0.50 inches	No	4.0	Less than or equal to 2%	1.0	1.0	40	76
6473	0	12/14/2015	Sandt DOT	Bristol	Bristol	East	Unknown		Asphalt	Good	No	Concrete	Good	No		6.0	None	None	36 inches to 60 inches	Unlimited	Greater than 0.50 inches	No	1.0	Greater than 2%	2.0	1.0	40	76
9079	0	3/16/2016	Sandt DOT	Plaistow	Rt 125	West	Unknown		Asphalt	Good	No	Granite	Good	No	5.00000000000	None	Fixed Object	36 inches to 60 inches	Unlimited	Level	No	1.0	Greater than 2%	3.0	1.0	40	76
9090	0	3/17/2016	Wilkinson District 1	Lincoln	Rte. 112	South-East	Unknown		Asphalt	Good	No	Granite	Good	No	2.00000000000	Bicycle Lane	None	36 inches to 60 inches	Unlimited	Greater than 0.50 inches	No	1.0	Greater than 2%	0.0	1.0	40	76
5209	0	11/20/2015	Sandt DOT	Wolfeboro	Rt 109	South	Unknown		Concrete	Good	Yes	Granite	Good	No		3.0	Parking Spaces	None	Greater than 60 inches	Unlimited	Level	No	4.0	Greater than 2%	2.0	1.0	39	77
5210	0	11/20/2015	Sandt DOT	Wolfeboro	Rt 109	South	Unknown		Concrete	Good	Yes	Granite	Good	No		3.0	Parking Spaces	None	Greater than 60 inches	Unlimited	Level	No	2.0	Greater than 2%	2.0	1.0	39	77
610	2109	6/26/2015	MC SWRPC	North Walpole	East Street	North	Unknown		Concrete	Fair	No	None	N/A	No		1.0	None	None	less than 36 inches	Unlimited	Level	No	5.2	Less than or equal to 2%	0.0	1.0	39	77
625	2124	6/30/2015	MM SWRPC	North Walpole	Spruce st	Northwest	Unknown		Concrete	Good	No	None	N/A	No		2.5	None	None	less than 36 inches	Unlimited	Level	No	4.0	Greater than 2%	1.0	1.0	39	77
796	2295	7/17/2015	Sandt DOT	Pittsfield	Main Street	South	Unknown		Concrete	Good	No	Granite	Good	No		4.0	None	None	36 inches to 60 inches	Unlimited	Level	No	18.0	Less than or equal to 2%	0.0	1.0	39	77
4623	41596	9/24/2015	Sandt DOT	Canaan	U.S. 4	South	Unknown		Asphalt	Good	Yes	Granite	Good	No		3.0	None	None	36 inches to 60 inches	Unlimited	Less than 0.25 inches	No	3.0	Less than or equal to 2%	5.0	1.0	39	77
4626	41599	9/24/2015	Sandt DOT	Canaan	U.S. 4	Southwest	Unknown		Asphalt	Good	Yes	Granite	Good	No		1.0	None	None	36 inches to 60 inches	Unlimited	Less than 0.25 inches	No	5.0	Less than or equal to 2%	0.0	1.0	39	77
4840	42653	10/20/2015	Sandt DOT	Exeter	Portsmouth Ave	Southeast	Unknown		Asphalt	Good	Yes	Granite	Good	No		2.0	Grass Strip	None	36 inches to 60 inches	Unlimited	Less than 0.25 inches	No	3.0	Less than or equal to 2%	4.0	1.0	39	77
5173	0	11/5/2015	Sandt DOT	Seabrook	286	South	Unknown		Concrete	Good	Yes	Granite	Good	No		6.0	None	None	36 inches to 60 inches	Unlimited	Level	No	1.0	Less than or equal to 2%	2.0	1.0	39	77
5190	0	11/5/2015	Sandt DOT	Hampton Falls	Rt 88	North	Unknown		Concrete	Good	Yes	Granite	Good	No		8.0	None	None	36 inches to 60 inches	Unlimited	Level	No	1.0	Less than or equal to 2%	0.0	1.0	39	77
5191	0	11/5/2015	Sandt DOT	Hampton Falls	Rt 88	South	Unknown		Concrete	Good	Yes	Granite	Good	No		8.0	None	None	36 inches to 60 inches	Unlimited	Level	No	1.0	Less than or equal to 2%	0.0	1.0	39	77
6401	0	12/9/2015	Wilkinson District 1	Carroll	Rte. 3	West	Unknown		Concrete	Good	Yes	Granite	Good	No		6.0	None	None	36 inches to 60 inches	Unlimited	Level	No	1.0	Less than or equal to 2%	0.0	1.0	39	77
6793	0	1/7/2016	Sandt DOT	Tilton	Rt 3	South	Unknown		Concrete	Good	Yes	Granite	Good	No		6.0	None	None	36 inches to 60 inches	Unlimited	Level	No	2.0	Less than or equal to 2%	0.0	1.0	39	77
10114	0	3/18/2016	Sandt DOT	Plaistow	Rt 125	West	Unknown		Asphalt	Good	No	Granite	Good	No	6.00000000000	None	None	36 inches to 60 inches	Unlimited	Less than 0.25 inches	No	10.0	Less than or equal to 2%	0.0	1.0	39	77
5131	0	11/16/2015	Sandt DOT	Moultonborough	109	West	Unknown		Asphalt	Good	No	Granite	Good	No		4.0	None	Vegetation	36 inches to 60 inches	Greater than 80 inches	Level	No	5.0	Greater than 2%	0.0	1.0	39	77
6279	0	12/4/2015	Sandt DOT	Ashland	Rt 3	North	Unknown		Brick	Good	No	Granite	Good	No		6.0	Parking Spaces	None	36 inches to 60 inches	Greater than 80 inches	Less than 0.25 inches	No	1.0	Greater than 2%	0.0	1.0	39	77
6797	0	1/7/2016	Nichols district 1	Woodsville	Rte 10	West	Unknown		Asphalt	Good	No	Granite	Good	No		6.0	Bicycle Lane	Drain	36 inches to 60 inches	Greater than 80 inches	Level	No	4.0	Greater than 2%	1.0	1.0	39	77
635	2134	7/2/2015	Sandt DOT	Manchester	Hanover Street	South	Unknown		Asphalt	Good	No	Granite	Good	No		5.0	None	Utility Pole	36 inches to 60 inches	Unlimited	0.25 inches to 0.50 inches	No	1.0	Less than or equal to 2%	0.0	1.0	38	78
4872	42685	10/22/2015	Sandt DOT	Portsmouth	New Hampshire Ave	South	Unknown		Concrete	Good	No	Granite	Good	No		4.0	Grass Strip	None	36 inches to 60 inches	Unlimited	Less than 0.25 inches	Yes	2.0	Less than or equal to 2%	1.0	1.0	38	78
6626	0	12/17/2015	Wilkinson District 1	Pike	Rte. 25	North	Unknown		Asphalt	Fair	No	Granite	Good	No		4.0	Bicycle Lane	None	36 inches to 60 inches	Unlimited	0.25 inches to 0.50 inches	No	3.0	Greater than 2%	1.0	1.0	38	78
864	3232	7/23/2015	Sandt DOT	Derry	S Main St.	Northeast	Unknown		Asphalt	Good	Yes	Granite	Good	No		4.0	Grass Strip	None	Greater than 60 inches	Greater than 80 inches	Level	No	1.0	Greater than 2%	7.0	1.0	38	78
865	3233	7/23/2015	Sandt DOT	Derry	S Main St.	Northeast	Unknown		Asphalt	Good	Yes	Granite	Good	No		4.0	None	None	Greater than 60 inches	Greater than 80 inches	Level	No	1.0	Greater than 2%	0.0	1.0	38	78
866	3234	7/23/2015	Sandt DOT	Derry	S Main St.	Northeast	Unknown		Asphalt	Good	Yes	Granite	Good	No		4.0	None	None	Greater than 60 inches	Greater than 80 inches	Level	No	1.0	Greater than 2%	0.0	1.0	38	78
867	3235	7/23/2015	Sandt DOT	Derry	S Main St.	Northeast	Unknown		Asphalt	Good	Yes	Granite	Good	No		4.0	None	None	Greater than 60 inches	Greater than 80 inches	Level	No	1.0	Greater than 2%	0.0	1.0	38	78
868	3236	7/23/2015	Sandt DOT	Derry	S Main St.	Northeast	Unknown		Asphalt	Good	Yes	Granite	Good	No		4.0	None	None	Greater than 60 inches	Greater than 80 inches	Level	No	1.0	Greater than 2%	0.0	1.0	38	78
4333	41305	8/17/2015	Sandt DOT	Antrim	Main Street	East	Unknown		Asphalt	Good	No	Granite	Good	No		3.0	Grass Strip	None	Greater than 60 inches	Greater than 80 inches	Less than 0.25 inches	No	11.0	Greater than 2%	4.0	1.0	38	78
6269	0	12/4/2015	Sandt DOT	Plymouth	Rt 3	West	Unknown		Asphalt	Good	Yes	Granite	Good	No		6.0	Parking Spaces	None	Greater than 60 inches	Greater than 80 inches	Level	No	3.0	Greater than 2%	1.0	1.0	38	78
6270	0	12/4/2015	Sandt DOT	Plymouth	Rt 3	West	Unknown		Asphalt	Good	Yes	None	Good	No		0.0	None	None	Greater than 60 inches	Greater than 80 inches	Level	No	3.0	Greater than 2%	0.0	1.0	38	78
6652	0	12/17/2015	Sandt DOT	Tilton	Rt 132	South-East	Unknown	12/17/2015	Asphalt	Good	No	Granite	Good	No		5.0	None	None	Greater than 60 inches	Greater than 80 inches	Level	No	9.0	Greater than 2%	1.0	1.0	38	78
6741	0	12/28/2015	MM SWRPC	Hinsdale	School st	East	Unknown		Asphalt	Fair	Yes	None	N/A	No		0.0	Grass Strip	None	Greater than 60 inches	Greater than 80 inches	Level	No	1.0	Less than or equal to 2%	0.0	1.0	38	78
575	2074	6/26/2015	MC SWRPC	North Walpole	Church Street	West	Unknown		Asphalt	Good	No	Granite	Good	No		3.0	None	None	less than 36 inches	Greater than 80 inches	Level	No	2.0	Greater than 2%	6.0	1.0	38	78
588	2087	6/26/2015	MC SWRPC	North Walpole	Church Street	East	Unknown		Asphalt	Good	No	Granite	Good	No		3.0	None	None	less than 36 inches	Greater than 80 inches	Level	No	2.0	Greater than 2%	3.0	1.0	38	78
638	2137	7/2/2015	Sandt DOT	Manchester	Hanover Street	North	Unknown		Asphalt	Good	Yes	Granite	Good	No		5.0	None	None	36 inches to 60 inches	Greater than 80 inches	Level	No	0.0	Less than or equal to 2%	0.0	1.0	38	78
4187	34715	7/30/2015	Sandt DOT	Brookline	Main Street	Northeast	Unknown		Asphalt	Good	Yes	None	Good	No		0.0	Grass Strip	None	Greater than 60 inches	Greater than 80 inches	Level	No	2.0	Less than or equal to 2%	0.0	1.0	38	78
4205	41174	7/31/2015	Sandt DOT	Henniker	Maple Street	East	Unknown		Asphalt	Good	Yes	Granite	Good	No		2.0	Grass Strip	None	36 inches to 60 inches	Greater than 80 inches	Level	No	2.0	Less than or equal to 2%	2.0	1.0	38	78
4279	41250	8/12/2015	Sandt DOT	Nashua	Milford Road	South	Unknown		Asphalt	Good	No	Granite	Good	No		5.0	None	Vegetation	36 inches to 60 inches	Less than 80in	Level	No	1.0	Less than or equal to 2%	3.0	1.0	38	78
4280	41251	8/12/2015	Sandt DOT	Nashua	Amherst Street	South	Unknown		Asphalt	Good	No	Granite	Good	No		5.0	Grass Strip	Vegetation	36 inches to 60 inches	Less than 80in	Level	No	1.0	Less than or equal to 2%	0.0	1.0	38	78
4328	41300	8/17/2015	Sandt DOT	Antrim	Main Street	West	Unknown		Asphalt	Good	No	Granite	Good	No		4.0	None	None	36 inches to 60 inches	Greater than 80 inches	Level	No	9.0	Less than or equal to 2%	5.0	1.0	38	78
4332	41304	8/17/2015	Sandt DOT	Antrim	Main Street	East	Unknown		Asphalt	Good	No	Granite	Good	No		3.0	Grass Strip	None	36 inches to 60 inches	Greater than 80 inches	Level	No	14.0	Less than or equal to 2%	4.0	1.0	38	78
4394	41366	8/26/2015	Sandt DOT	Concord	South Street	Northeast	Unknown		Asphalt	Good	Yes	None	N/A	No		0.0	Grass Strip	None	36 inches to 60 inches	Greater than 80 inches	Level	No	1.0	Less than or equal to 2%	0.0	1.0	38	78
4395	41367	8/26/2015	Sandt DOT	Concord	South Street	Northeast	Unknown		Asphalt	Good	Yes	None	N/A	No		0.0	Grass Strip	None	36 inches to 60 inches	Greater than 80 inches	Level	No	1.0	Less than or equal to 2%	0.0	1.0	38	78
4429	41401	8/28/2015	Sandt DOT	Troy	Rt 12	West	Unknown		Asphalt	Good	Yes	Granite	Good	No		2.0	None	None	36 inches to 60 inches	Greater than 80 inches	Level	No	5.0	Less than or equal to 2%	0.0	1.0	38	78
4450	41423	8/31/2015	Sandt DOT	Winchester	Ashuelot Main Street	Southwest	Unknown		Asphalt	Good	Yes	None	N/A	No		0.0	Grass Strip	None	36 inches to 60 inches	Greater than 80 inches	Level	No	2.0	Less than or equal to 2%	0.0	1.0	38	78
4533	41506	9/14/2015	Sandt DOT	Charlestown	Rt 12	East	Unknown		Asphalt	Good	Yes	Granite	Good	No		3.0	Grass Strip	None	36 inches to 60 inches	Greater than 80 inches	Level	No	1.0	Less than or equal to 2%	1.0	1.0	38	78
4598	41571	9/23/2015	Sandt DOT	Hanover	S Main	West	Unknown		Asphalt	Good	Yes	Granite	Good	No		5.0	None	None	36 inches to 60 inches	Greater than 80 inches	Level	No	11.0	Less than or equal to 2%	1.0	1.0	38	78
4652	41625	9/28/2015	Sandt DOT	Farmington	Main Street	Southeast	Unknown		Asphalt	Good	Yes	Granite	Good	No		5.0	Parking Spaces	None	36 inches to 60 inches	Greater than 80 inches	Level	No	3.0	Less than or equal to 2%	5.0	1.0	38	78
4653	41626	9/28/2015	Sandt DOT	Farmington	Main Street	South	Unknown		Asphalt	Good	Yes	Granite	Good	No		5.0	None	None	36 inches to 60 inches	Greater than 80 inches	Level	No	0.0	Less than or equal to 2%	5.0	1.0	38	78
4791	41764	10/12/2015	Sandt DOT	New Castle	Wentworth Road	South	Unknown		Asphalt	Good	No	None	N/A	No		0.0	Grass Strip	None	36 inches to 60 inches	Greater than 80 inches	Level	No	11.0	Less than or equal to 2%	0.0	1.0	38	78
5274	0	11/24/2015	Sandt DOT	Moultonborough	Moultonborough Neck Road	North-East	Unknown		Asphalt	Good	Yes	None	N/A	No		0.0	Grass Strip	None	36 inches to 60 inches	Greater than 80 inches	Level	No	2.0	Less than or equal to 2%	0.0	1.0	38	78
6176	0	11/25/2015	Sandt DOT	Alton	Rt 11	South-West	Unknown		Asphalt	Good	No	None	N/A	No		0.0	Grass Strip	None	36 inches to 60 inches	Greater than 80 inches	Level	No	10.0	Less than or equal to 2%	0.0	1.0	38	78
6199	42649	11/30/2015	Sandt DOT	Concord	Rt 13	South	Unknown		Asphalt	Good	Yes	Granite	Good	No		6.0	Grass Strip	None	36 inches to 60 inches	Greater than 80 inches	Level	No	2.0	Less than or equal to 2%	2.0	1.0	38	78
6200	42649	11/30/2015	Sandt DOT	Concord	Rt 13	North	Unknown		Asphalt	Good	Yes	Granite	Good	No		6.0	Grass Strip	None	36 inches to 60 inches	Greater than 80 inches	Level	No	2.0	Less than or equal to 2%	2.0	1.0	38	78
6203	42649	11/30/2015	Sandt DOT	Concord	Rt 13	North	Unknown		Asphalt	Good	Yes	Granite	Good	No		5.0	Grass Strip	None	36 inches to 60 inches	Greater than 80 inches	Level	No	2.0	Less than or equal to 2%	2.0	1.0	38	78
6283	0	12/4/2015	Sandt DOT	Ashland	Rt 3	North	Unknown		Asphalt	Good	Yes	None	N/A	No		0.0	Grass Strip	None	36 inches to 60 inches	Greater than 80 inches	Level	No	8.0	Less than or equal to 2%	0.0	1.0	38	78
6571	0	12/15/2015	Sandt DOT	Tilton	Rt 3	North-West	Unknown		Asphalt	Good	Yes	Granite	Good	No		5.0	None	None	36 inches to 60 inches	Greater than 80 inches	Level	No	7.0	Less than or equal to 2%	0.0	1.0	38	78
6572	0	12/15/2015	Sandt DOT	Tilton	Rt 3	North-West	Unknown		Asphalt	Good	Yes	Granite	Good	No		5.0	None	None	36 inches to 60 inches	Greater than 80 inches	Level	No	3.0	Less than or equal to 2%	1.0	1.0	38	78
6573	0	12/15/2015	Sandt DOT	Tilton	Rt 3	North-West	Unknown		Asphalt	Good	Yes	Granite	Good	No		5.0	None	None	36 inches to 60 inches	Greater than 80 inches	Level	No	3.0	Less than or equal to 2%	0.0	1.0	38	78
6684	0	12/22/2015	MM SWRPC	Troy	S main st	North-East	Unknown		Asphalt	Good	Yes	None	N/A	No		0.0	None	None	36 inches to 60 inches	Greater than 80 inches	Level	No	5.0	Less than or equal to 2%	1.0	1.0	38	78
6713	0	12/23/2015	MM SWRPC	Hinsdale	Highland ave	South-West	Unknown		Asphalt	Good	No	None	N/A	No		0.0	None	None	36 inches to 60 inches	Greater than 80 inches	Level	No	19.0	Less than or equal to 2%	2.0	1.0	38	78
6743	0	12/28/2015	MM SWRPC	Troy	Depot st	North-East	Unknown		Asphalt	Good	Yes	Asphalt	Fair	No		3.0	None	None	36 inches to 60 inches	Greater than 80 inches	Level	No	6.0	Less than or equal to 2%	0.0	1.0	38	78
6593	0	12/16/2015	Nichols district 1	Littleton	Rte 302	North	Unknown		Concrete	Good	No	Granite	Good	No		7.0	Parking Spaces	Fixed Object	Greater than 60 inches	Greater than 80 inches	Level	No	0.0	Greater than 2%	4.0	1.0	37	78
6594	0	12/16/2015	Nichols district 1	Littleton	Rte 302	North	Unknown		Concrete	Good	No	Granite	Good	No		6.0	Parking Spaces	Fixed Object	Greater than 60 inches	Greater than 80 inches	Level	No	1.0	Greater than 2%	3.0	1.0	37	78
6595	0	12/16/2015	Nichols district 1	Littleton	Rte 302	North	Unknown		Concrete	Good	No	Granite	Good	No		5.0	Parking Spaces	Fixed Object	Greater than 60 inches	Greater than 80 inches	Level	No	3.0	Greater than 2%	0.0	1.0	37	78
6596	0	12/16/2015	Nichols district 1	Littleton	Rte 302	North	Unknown		Concrete	Good	No	Granite	Good	No		7.0	Parking Spaces	Fixed Object	Greater than 60 inches	Greater than 80 inches	Level	No	1.0	Greater than 2%	0.0	1.0	37	78
6597	0	12/16/2015	Nichols district 1	Littleton	Rte 302	South	Unknown		Concrete	Good	No	Granite	Good	No		6.0	Parking Spaces	Fixed Object	Greater than 60 inches	Greater than 80 inches	Level	No	1.0	Greater than 2%	0.0	1.0	37	78
6598	0	12/16/2015	Nichols district 1	Littleton	Rte 302	South	Unknown		Concrete	Good	No	Granite	Good	No		7.0	Parking Spaces	Fixed Object	Greater than 60 inches	Greater than 80 inches	Level	No	1.0	Greater than 2%	0.0	1.0	37	78
6599	0	12/16/2015	Nichols district 1	Littleton	Rte 302	South	Unknown		Concrete	Good	No	Granite	Good	No		7.0	Parking Spaces	Fixed Object	Greater than 60 inches	Greater than 80 inches	Level	No	0.0	Greater than 2%	0.0	1.0	37	78
6600	0	12/16/2015	Nichols district 1	Littleton	Rte 302	South	Unknown		Concrete	Good	No	Granite	Good	No		6.0	Parking Spaces	Fixed Object	Greater than 60 inches	Greater than 80 inches	Level	No	1.0	Greater than 2%	0.0	1.0	37	78
6601	0	12/16/2015	Nichols district 1	Littleton	Rte 302	South	Unknown		Concrete	Good	No	Granite	Good	No		5.0	Parking Spaces	Fixed Object	Greater than 60 inches	Greater than 80 inches	Level	No	1.0	Greater than 2%	0.0	1.0	37	78
6602	0	12/16/2015	Nichols district 1	Littleton	Rte 302	South	Unknown		Concrete	Good	No	Granite	Good	No		6.0	Parking Spaces	Fixed Object	Greater than 60 inches	Greater than 80 inches	Level	No	1.0	Greater than 2%	0.0	1.0	37	78
4339	41311	8/17/2015	Sandt DOT	Antrim	Main Street	West	Unknown		Concrete	Good	No	Granite	Good	No		4.0	Parking Spaces	Utility Pole	36 inches to 60 inches	Greater than 80 inches	Level	No	0.0	Less than or equal to 2%	0.0	1.0	37	78
4349	41321	8/17/2015	Sandt DOT	Bennington	Greenfield Road	South	Unknown		Concrete	Good	No	Concrete	Good	No		6.0	None	None	36 inches to 60 inches	Greater than 80 inches	Level	Yes	2.0	Less than or equal to 2%	0.0	1.0	37	78
4379	41351	8/20/2015	Sandt DOT	Peterborough	Grove Street	West	Unknown		Concrete	Good	No	Granite	Good	No		5.0	None	None	36 inches to 60 inches	Greater than 80 inches	Level	Yes	1.0	Less than or equal to 2%	5.0	1.0	37	78
4380	41352	8/20/2015	Sandt DOT	Peterborough	Grove Street	West	Unknown		Concrete	Good	No	Granite	Good	No		5.0	None	None	36 inches to 60 inches	Greater than 80 inches	Level	Yes	1.0	Less than or equal to 2%	1.0	1.0	37	78
4518	41491	9/14/2015	Sandt DOT	Charlestown	Rt 12	West	Unknown		Concrete	Good	No	None	N/A	No		0.0	Grass Strip	None	36 inches to 60 inches	Greater than 80 inches	Level	Yes	1.0	Less than or equal to 2%	0.0	1.0	37	78
4519	41492	9/14/2015	Sandt DOT	Charlestown	Rt 12	West	Unknown		Concrete	Good	No	None	N/A	No		0.0	Grass Strip	None	36 inches to 60 inches	Greater than 80 inches	Level	Yes	5.0	Less than or equal to 2%	0.0	1.0	37	78
4520	41493	9/14/2015	Sandt DOT	Charlestown	Rt 12	West	Unknown		Concrete	Good	No	None	N/A	No		0.0	Grass Strip	None	36 inches to 60 inches	Greater than 80 inches	Level	Yes	5.0	Less than or equal to 2%	0.0	1.0	37	78
4526	41499	9/14/2015	Sandt DOT	Charlestown	Rt 12	West	Unknown		Concrete	Good	No	None	N/A	No		0.0	Grass Strip	None	36 inches to 60 inches	Greater than 80 inches	Level	Yes	5.0	Less than or equal to 2%	0.0	1.0	37	78
4527	41500	9/14/2015	Sandt DOT	Charlestown	Rt 12	West	Unknown		Concrete	Good	No	None	N/A	No		0.0	Grass Strip	None	36 inches to 60 inches	Greater than 80 inches	Level	Yes	5.0	Less than or equal to 2%	0.0	1.0	37	78
4528	41501	9/14/2015	Sandt DOT	Charlestown	Rt 12	West	Unknown		Concrete	Good	No	None	N/A	No		0.0	Grass Strip	None	36 inches to 60 inches	Greater than 80 inches	Level	Yes	5.0	Less than or equal to 2%	0.0	1.0	37	78
4530	41503	9/14/2015	Sandt DOT	Charlestown	Rt 12	West	Unknown		Concrete	Good	No	None	N/A	No		0.0	Grass Strip	None	36 inches to 60 inches	Greater than 80 inches	Level	Yes	5.0	Less than or equal to 2%	0.0	1.0	37	78
4866	42679	10/22/2015	Sandt DOT	Portsmouth	Woodbury Ave	Northeast	Unknown		Concrete	Good	No	Granite	Good	No		4.0	Grass Strip	None	36 inches to 60 inches	Greater than 80 inches	Greater than 0.50 inches	No	1.0	Less than or equal to 2%	5.0	1.0	37	78
5113	0	11/10/2015	MM SWRPC	Hinsdale	Main St	South	Unknown		Concrete	Fair	No	Concrete	Poor	No		1.0	None	None	36 inches to 60 inches	Greater than 80 inches	Level	No	0.0	Greater than 2%	2.0	1.0	37	78
5150	0	11/18/2015	Sandt DOT	Tuftonboro	Rt 109	West	Unknown		Concrete	Good	No	Granite	Good	No		6.0	None	None	36 inches to 60 inches	Greater than 80 inches	Greater than 0.50 inches	No	2.0	Less than or equal to 2%	0.0	1.0	37	78
5231	0	11/23/2015	Sandt DOT	Wolfeboro	Rt 109	East	Unknown		Concrete	Good	No	Granite	Good	No		6.0	None	None	36 inches to 60 inches	Greater than 80 inches	Greater than 0.50 inches	No	2.0	Less than or equal to 2%	1.0	1.0	37	78
6148	0	11/25/2015	Nichols district 1	Gorham	Rte 16	West	Unknown		Concrete	Fair	No	Concrete	Fair	No		6.0	None	None	36 inches to 60 inches	Greater than 80 inches	Level	No	2.0	Greater than 2%	0.0	1.0	37	78
6233	0	12/3/2015	Sandt DOT	Thornton	Rt 49	South	Unknown		Concrete	Good	No	Granite	Good	No		8.0	None	None	36 inches to 60 inches	Greater than 80 inches	Level	Yes	1.0	Less than or equal to 2%	0.0	1

9103	0	3/18/2016 Sandt DOT	Plaistow	Rt 125	East	Unknown	Asphalt	Good	No	Granite	Good	No	6.00000000000	Grass Strip	None	36 inches to 60 inches	Unlimited	Level	No	9.0 Less than or equal to 2%	0.0	1.0	35	79
602	2101	6/26/2015 MC SWRPC	North Walpole	Brady Street	South	Unknown	Concrete	Fair	No	None	N/A	No	0.5	None	None	36 inches to 60 inches	Greater than 80 inches	0.25 inches to 0.50 inches	No	3.0 Less than or equal to 2%	2.0	1.0	35	79
4200	34728	7/31/2015 Sandt DOT	Warner	E Main Street	North	Unknown	Brick	Good	No	Granite	Good	No	6.0	Parking Spaces	None	36 inches to 60 inches	Greater than 80 inches	Level	No	2.0 Greater than 2%	0.0	1.0	35	79
4202	34730	7/31/2015 Sandt DOT	Warner	E Main Street	South	Unknown	Brick	Good	No	Granite	Good	No	6.0	Parking Spaces	None	36 inches to 60 inches	Greater than 80 inches	Level	No	1.0 Greater than 2%	1.0	1.0	35	79
4203	34731	7/31/2015 Sandt DOT	Warner	E Main Street	South	Unknown	Brick	Good	No	Granite	Good	No	6.0	Parking Spaces	None	36 inches to 60 inches	Greater than 80 inches	Level	No	3.0 Greater than 2%	3.0	1.0	35	79
4204	34732	7/31/2015 Sandt DOT	Warner	E Main Street	South	Unknown	Brick	Good	No	Granite	Good	No	6.0	Parking Spaces	None	36 inches to 60 inches	Greater than 80 inches	Level	No	2.0 Greater than 2%	0.0	1.0	35	79
4273	41243	8/10/2015 Sandt DOT	Hillsborough	Center	West	Unknown	Brick	Good	No	Granite	Good	No	4.0	Parking Spaces	None	36 inches to 60 inches	Greater than 80 inches	Level	No	2.0 Greater than 2%	0.0	1.0	35	79
4511	41484	9/14/2015 Sandt DOT	Charlestown	Rt 12	East	Unknown	Concrete	Good	No	None	N/A	No	0.0	Grass Strip	None	36 inches to 60 inches	Greater than 80 inches	0.25 inches to 0.50 inches	No	6.0 Greater than 2%	0.0	1.0	35	79
7887	0	1/25/2016 Nichols district 1	Jackson	Rte 16 A	South	Unknown	Concrete	Fair	No	Granite	Fair	No	3.0	None	None	36 inches to 60 inches	Greater than 80 inches	0.25 inches to 0.50 inches	No	3.0 Less than or equal to 2%	0.0	1.0	35	79
4859	42672	10/21/2015 Wilkinson dist 1	Clarksville	Rte 145	West	Unknown	Concrete	Fair	No	None	N/A	No	0.0	None	None	Greater than 60 inches	Unlimited	Greater than 0.50 inches	No	3.0 Less than or equal to 2%	0.0	1.0	34	80
412	856	4/30/2015 Srpc tom	Newmarket	108	East	Unknown	Concrete	Good	No	Granite	Good	No	5.0	None	Fixed Object	36 inches to 60 inches	Unlimited	Level	No	7.0 Less than or equal to 2%	2.0	1.0	34	80
512	1076	6/22/2015 Sandt DOT	Hooksett	Main	West	Unknown	Concrete	Good	No	Granite	Good	No	5.0	None	None	36 inches to 60 inches	Unlimited	Greater than 0.50 inches	No	2.0 Less than or equal to 2%	0.0	1.0	34	80
551	2050	6/26/2015 Sandt DOT	Manchester	Daniel Webster Hwy	Southeast	Unknown	Concrete	Good	No	Granite	Good	No	4.0	None	Utility Pole	36 inches to 60 inches	Unlimited	Level	No	0.0 Less than or equal to 2%	0.0	1.0	34	80
558	2057	6/26/2015 Sandt DOT	Manchester	Amoskeag	South	Unknown	Concrete	Good	No	Granite	Good	No	6.0	None	None	36 inches to 60 inches	Unlimited	Greater than 0.50 inches	No	1.0 Less than or equal to 2%	0.0	1.0	34	80
624	2123	6/30/2015 NM SWRPC	North Walpole	Spruce st	Southeast	Unknown	Concrete	Fair	No	None	N/A	No	1.5	None	None	36 inches to 60 inches	Unlimited	Level	No	5.2 Greater 2%	1.0	1.0	34	80
662	2161	7/7/2015 Sandt DOT	Concord	W Portsmouth Street	South	Unknown	Concrete	Good	No	Granite	Good	No	5.0	None	None	36 inches to 60 inches	Unlimited	Greater than 0.50 inches	No	4.0 Less than or equal to 2%	0.0	1.0	34	80
665	2164	7/7/2015 Sandt DOT	Concord	Foundry Street	East	Unknown	Concrete	Good	No	Granite	Good	No	6.0	None	Utility Pole	36 inches to 60 inches	Unlimited	Level	No	0.0 Less than or equal to 2%	0.0	1.0	34	80
759	2258	7/15/2015 Sandt DOT	Plaistow	Atkinson Depot Road	South	Unknown	Concrete	Good	No	Granite	Good	No	6.0	None	None	36 inches to 60 inches	Unlimited	Level	Yes	4.3 Less than or equal to 2%	0.0	1.0	34	80
4222	41191	8/4/2015 Sandt DOT	Hopkinton	Maple Street	Southeast	Unknown	Concrete	Good	No	Granite	Good	No	5.0	None	None	36 inches to 60 inches	Unlimited	Greater than 0.50 inches	No	1.0 Less than or equal to 2%	0.0	1.0	34	80
4232	41201	8/6/2015 Sandt DOT	Concord	I93 slip road	South	Unknown	Concrete	Good	No	Granite	Good	No	5.0	None	None	36 inches to 60 inches	Unlimited	Greater than 0.50 inches	No	1.0 Less than or equal to 2%	0.0	1.0	34	80
4237	41206	8/7/2015 Sandt DOT	Goffstown	Main Street	Southwest	Unknown	Concrete	Good	No	Granite	Good	No	7.0	None	Utility Pole	36 inches to 60 inches	Unlimited	Level	No	2.0 Less than or equal to 2%	0.0	1.0	34	80
4240	41209	8/7/2015 Sandt DOT	Goffstown	Mansion	Northeast	Unknown	Concrete	Good	No	Granite	Good	No	7.0	None	Utility Pole	36 inches to 60 inches	Unlimited	Level	No	2.0 Less than or equal to 2%	0.0	1.0	34	80
4642	41615	9/25/2015 Sandt DOT	Exeter	Rt 27	North	Unknown	Concrete	Good	No	Granite	Good	No	7.0	None	None	36 inches to 60 inches	Unlimited	Greater than 0.50 inches	No	5.0 Less than or equal to 2%	0.0	1.0	34	80
4671	41644	9/29/2015 Sandt DOT	Northwood	Rt 4	Southwest	Unknown	Asphalt	Good	No	Granite	Good	No	3.0	None	Vegetation	36 inches to 60 inches	Unlimited	0.25 inches to 0.50 inches	No	2.0 Less than or equal to 2%	3.0	1.0	34	80
4803	41776	10/14/2015 Sandt DOT	Portsmouth	Rt 1	West	Unknown	Concrete	Good	No	Granite	Good	No	6.0	None	None	36 inches to 60 inches	Unlimited	Greater than 0.50 inches	No	1.0 Less than or equal to 2%	0.0	1.0	34	80
4805	41778	10/14/2015 Sandt DOT	Portsmouth	Rt 1	West	Unknown	Concrete	Good	No	Granite	Good	No	4.0	None	None	36 inches to 60 inches	Unlimited	Greater than 0.50 inches	No	1.0 Less than or equal to 2%	0.0	1.0	34	80
4810	41783	10/14/2015 Sandt DOT	Portsmouth	Rt 1	West	Unknown	Concrete	Good	No	Granite	Good	No	6.0	None	None	36 inches to 60 inches	Unlimited	Greater than 0.50 inches	No	1.0 Less than or equal to 2%	0.0	1.0	34	80
4847	42660	10/20/2015 Sandt DOT	Newfields	College Road	Northeast	Unknown	Concrete	Good	No	Granite	Good	No	7.0	None	None	36 inches to 60 inches	Unlimited	Greater than 0.50 inches	No	2.0 Less than or equal to 2%	0.0	1.0	34	80
4850	42663	10/20/2015 Sandt DOT	Newfields	College Road	Southwest	Unknown	Concrete	Good	No	Granite	Good	No	7.0	None	None	36 inches to 60 inches	Unlimited	Greater than 0.50 inches	No	2.0 Less than or equal to 2%	0.0	1.0	34	80
4871	42684	10/22/2015 Sandt DOT	Portsmouth	Manchester Square	South	Unknown	Concrete	Good	No	Granite	Good	No	4.0	Grass Strip	None	36 inches to 60 inches	Unlimited	Level	Yes	2.0 Less than or equal to 2%	1.0	1.0	34	80
9082	0	3/16/2016 Sandt DOT	Plaistow	Rt 125	West	Unknown	Concrete	Good	No	Granite	Good	No	6.00000000000	None	None	36 inches to 60 inches	Unlimited	Greater than 0.50 inches	No	6.0 Less than or equal to 2%	1.0	1.0	34	80
10121	0	3/30/2016 Sandt DOT	Plaistow	Kingston Road	West	Unknown	Concrete	Good	No	Concrete	Good	No	6.00000000000	None	None	36 inches to 60 inches	Unlimited	Greater than 0.50 inches	No	1.0 Less than or equal to 2%	0.0	1.0	34	80
784	2283	7/17/2015 Sandt DOT	Pittsfield	Drake's Park	East	Unknown	Asphalt	Good	No	None	N/A	No	0.0	None	None	Greater than 60 inches	Greater than 80 inches	Greater than 0.50 inches	No	6.0 Greater than 2%	0.0	1.0	33	81
843	3211	7/22/2015 Sandt DOT	Derry	W Broadway	Southeast	Unknown	Asphalt	Good	No	Granite	Good	No	1.0	Parking Spaces	Utility Pole	Greater than 60 inches	Greater than 80 inches	Level	No	8.0 Greater than 2%	3.0	1.0	33	81
6206	0	12/1/2015 Wilkinson District 1	Errol	Rte. 26	South-West	Unknown	Asphalt	Good	No	Granite	Good	No	6.0	Bicycle Lane	None	Greater than 60 inches	Greater than 80 inches	Greater than 0.50 inches	No	4.0 Greater than 2%	1.0	1.0	33	81
6272	0	12/4/2015 Sandt DOT	Plymouth	Rt 3	East	Unknown	Asphalt	Good	No	Granite	Good	No	6.0	Parking Spaces	Utility Pole	Greater than 60 inches	Greater than 80 inches	Level	No	4.0 Greater than 2%	5.0	1.0	33	81
546	2045	6/25/2015 Sandt DOT	Hooksett	Mammoth	East	Unknown	Asphalt	Good	No	Granite	Good	No	6.0	Grass Strip	None	36 inches to 60 inches	Greater than 80 inches	Greater than 0.50 inches	No	3.0 Less than or equal to 2%	3.0	1.0	33	81
567	2066	6/26/2015 Sandt DOT	Manchester	2nd	Southeast	Unknown	Asphalt	Good	No	Granite	Good	No	6.0	None	Utility Pole	36 inches to 60 inches	Greater than 80 inches	Level	No	0.0 Less than or equal to 2%	0.0	1.0	33	81
618	2117	6/29/2015 Sandt DOT	Portsmouth	International Drive	East	Unknown	Asphalt	Good	No	Granite	Good	No	5.0	Grass Strip	None	36 inches to 60 inches	Greater than 80 inches	Greater than 0.50 inches	No	3.0 Less than or equal to 2%	3.0	1.0	33	81
633	2132	7/2/2015 Sandt DOT	Manchester	Hanover Street	South	Unknown	Asphalt	Good	No	Granite	Good	No	6.0	None	Utility Pole	36 inches to 60 inches	Greater than 80 inches	Level	No	0.0 Less than or equal to 2%	1.0	1.0	33	81
4400	41372	8/26/2015 Sandt DOT	Concord	South Street	West	Unknown	Asphalt	Good	No	None	N/A	No	0.0	Grass Strip	None	36 inches to 60 inches	Greater than 80 inches	Level	Yes	3.0 Less than or equal to 2%	0.0	1.0	33	81
4401	41373	8/26/2015 Sandt DOT	Concord	South Street	West	Unknown	Asphalt	Good	No	None	N/A	No	0.0	Grass Strip	None	36 inches to 60 inches	Greater than 80 inches	Level	Yes	8.0 Less than or equal to 2%	0.0	1.0	33	81
4402	41374	8/26/2015 Sandt DOT	Concord	South Street	West	Unknown	Asphalt	Good	No	None	N/A	No	0.0	Grass Strip	None	36 inches to 60 inches	Greater than 80 inches	Level	Yes	8.0 Less than or equal to 2%	0.0	1.0	33	81
4403	41375	8/26/2015 Sandt DOT	Concord	South Street	West	Unknown	Asphalt	Good	No	None	N/A	No	0.0	Grass Strip	None	36 inches to 60 inches	Greater than 80 inches	Level	Yes	3.0 Less than or equal to 2%	0.0	1.0	33	81
4531	41504	9/14/2015 Sandt DOT	Charlestown	Rt 12	West	Unknown	Asphalt	Good	No	None	N/A	No	0.0	Grass Strip	None	36 inches to 60 inches	Greater than 80 inches	Level	Yes	2.0 Less than or equal to 2%	0.0	1.0	33	81
4583	41556	9/21/2015 Sandt DOT	Hanover	Rt 10	West	Unknown	Asphalt	Good	No	Asphalt	Good	No	6.0	Grass Strip	None	36 inches to 60 inches	Greater than 80 inches	Level	Yes	2.0 Less than or equal to 2%	6.0	1.0	33	81
4584	41557	9/21/2015 Sandt DOT	Hanover	Rt 10	West	Unknown	Asphalt	Good	No	Asphalt	Good	No	6.0	Grass Strip	None	36 inches to 60 inches	Greater than 80 inches	Level	Yes	2.0 Less than or equal to 2%	6.0	1.0	33	81
4644	41617	9/28/2015 Sandt DOT	Farmington	Central Street	South	Unknown	Asphalt	Good	No	Granite	Good	No	2.0	Parking Spaces	Utility Pole	36 inches to 60 inches	Greater than 80 inches	Level	No	2.0 Less than or equal to 2%	6.0	1.0	33	81
4645	41618	9/28/2015 Sandt DOT	Farmington	Central Street	South	Unknown	Asphalt	Good	No	Granite	Good	No	5.0	None	Utility Pole	36 inches to 60 inches	Greater than 80 inches	Level	No	2.0 Less than or equal to 2%	6.0	1.0	33	81
4646	41619	9/28/2015 Sandt DOT	Farmington	Central Street	South	Unknown	Asphalt	Good	No	None	N/A	No	0.0	Grass Strip	Utility Pole	36 inches to 60 inches	Greater than 80 inches	Level	No	6.0 Less than or equal to 2%	0.0	1.0	33	81
4750	41723	10/6/2015 Sandt DOT	Dover	Durham Road	Southeast	Unknown	Asphalt	Good	No	Granite	Good	No	4.0	None	Utility Pole	36 inches to 60 inches	Greater than 80 inches	Level	No	1.0 Less than or equal to 2%	4.0	1.0	33	81
4843	42656	10/20/2015 Sandt DOT	Exeter	Portsmouth Ave	Southeast	Unknown	Asphalt	Good	No	Granite	Good	No	3.0	None	None	36 inches to 60 inches	Greater than 0.50 inches	No	4.0 Less than or equal to 2%	8.0	1.0	33	81
5111	0	11/10/2015 NM SWRPC	Hinsdale	Main St	North	Unknown	Asphalt	Fair	No	Concrete	Poor	No	2.5	None	None	36 inches to 60 inches	Greater than 80 inches	Level	No	2.0 Greater than 2%	3.0	1.0	33	81
5149	0	11/18/2015 Sandt DOT	Tuftonboro	Rt 109	West	Unknown	Asphalt	Good	No	None	N/A	No	6.0	None	None	36 inches to 60 inches	Greater than 80 inches	Greater than 0.50 inches	No	2.0 Less than or equal to 2%	0.0	1.0	33	81
5230	0	11/23/2015 Sandt DOT	Wolfeboro	Rt 109	East	Unknown	Asphalt	Good	No	Granite	Good	No	6.0	None	None	36 inches to 60 inches	Greater than 80 inches	Greater than 0.50 inches	No	2.0 Less than or equal to 2%	1.0	1.0	33	81
6404	0	12/9/2015 Wilkinson District 1	Carroll	Rte. 3	North	Unknown	Asphalt	Good	No	Granite	Good	No	6.0	Bicycle Lane	None	36 inches to 60 inches	Greater than 80 inches	Greater than 0.50 inches	No	6.0 Less than or equal to 2%	10.0	1.0	33	81
6405	0	12/9/2015 Wilkinson District 1	Carroll	Rte. 3	North	Unknown	Asphalt	Good	No	Granite	Good	No	6.0	Bicycle Lane	None	36 inches to 60 inches	Greater than 80 inches	Greater than 0.50 inches	No	6.0 Less than or equal to 2%	10.0	1.0	33	81
6629	0	12/17/2015 Wilkinson District 1	Warren	Rte.118	East	Unknown	Asphalt	Good	No	Granite	Good	No	4.0	Parking Spaces	Fixed Object	36 inches to 60 inches	Greater than 80 inches	Level	No	2.0 Less than or equal to 2%	5.0	1.0	33	81
6676	0	12/22/2015	Troy	Rt 12	East	Unknown	Asphalt	Good	No	Granite	Good	No	3.0	None	None	36 inches to 60 inches	Greater than 80 inches	Greater than 0.50 inches	No	2.0 Less than or equal to 2%	0.0	1.0	33	81
6813	0	1/8/2016 Sandt DOT	New London	Newport Road	North	Unknown	Asphalt	Good	No	Granite	Good	No	6.0	None	None	36 inches to 60 inches	Greater than 80 inches	Level	Yes	1.0 Less than or equal to 2%	0.0	1.0	33	81
7935	0	1/28/2016 Wilkinson District 1	Franconia	Rte. 18 and 116	South-East	Unknown	Asphalt	Good	No	Asphalt	N/A	No	4.0	Grass Strip	Fixed Object	36 inches to 60 inches	Greater than 80 inches	Level	No	5.0 Less than or equal to 2%	0.0	1.0	33	81
7955	0	1/29/2016 Sandt DOT	Piermont	Rt 25	North	Unknown	Asphalt	Good	No	None	Good	No	0.0	None	None	36 inches to 60 inches	Greater than 80 inches	Level	Yes	1.0 Less than or equal to 2%	0.0	1.0	33	81
10131	0	3/30/2016 Sandt DOT	Plaistow	Main Street	East	Unknown	Asphalt	Good	No	None	N/A	No	0.00000000000	Grass Strip	None	36 inches to 60 inches	Greater than 80 inches	Greater than 0.50 inches	No	2.0 Less than or equal to 2%	0.0	1.0	33	81
4543	41516	9/16/2015 Sandt DOT	Newport	Rt 10	West	Unknown	Brick	Good	No	Granite	Good	No	6.0	Parking Spaces	None	Greater than 60 inches	Unlimited	Greater than 0.50 inches	No	2.0 Less than or equal to 2%	2.0	1.0	32	81
5136	0	11/16/2015 Wilkinson District 1	North Stratford	Rte. 105	South	Unknown	Concrete	Good	No	Concrete	Good	No	5.0	None	None	36 inches to 60 inches	Unlimited	0.25 inches to 0.50 inches	No	3.0 Greater than 2%	0.0	1.0	32	81
6462	0	11/10/2015 Sandt DOT	Hampton	Rt 1	East	Unknown	Concrete	Good	No	Granite	Good	No	3.0	Grass Strip	None	36 inches to 60 inches	Unlimited	0.25 inches to 0.50 inches	No	3.0 Greater than 2%	3.0	1.0	32	81
6463	0	11/10/2015 Sandt DOT	Hampton	Rt 1	East	Unknown	Concrete	Good	No	Granite	Good	No	3.0	Grass Strip	None	36 inches to 60 inches	Unlimited	0.25 inches to 0.50 inches	No	3.0 Greater than 2%	6.0	1.0	32	81
4483	41456	9/3/2015 Sandt DOT	Swanzey	Sawyer's Crossing	Northeast	Unknown	Asphalt	Good	Yes	None	N/A	No	0.0	Grass Strip	None	Greater than 60 inches	Greater than 80 inches	Less than 0.25 inches	No	1.0 Less than or equal to 2%	0.0	1.0	32	81
5152	0	11/18/2015 Sandt DOT	Wolfeboro	N Main	South	Unknown	Concrete	Good	No	Granite	Good	No	5.0	None	None	Greater than 60 inches	Greater than 80 inches	Level	No	9.0 Less than or equal to 2%	0.0	1.0	32	81
8992	0	2/18/2016 Wilkinson District 1	Conway	Rte. 153	East	Unknown	Asphalt	Good	No	Granite	Good	No	6.0	None	None	36 inches to 60 inches	Less than 80in	Level	No	3.0 Greater than 2%	8.0	1.0	32	81
6315	0	12/1/2015 Nichols district 1	Groveton	Rte 3	West	Unknown	Concrete	Fair	No	Granite	Poor	No	3.0	Parking Spaces	None	Greater than 60 inches	Greater than 80 inches	Less than 0.25 inches	No	1.0 Greater than 2%	1.0	1.0	31	82
6762	0	1/4/2016 Nichols district 1	Woodsville	Rte 302	South	Unknown	Concrete	Good	No	None	N/A	No	0.0	None	None	Greater than 60 inches	Greater than 80 inches	Less than 0.25 inches	Yes	3.0 Less than or equal to 2%	0.0	1.0	31	82
574	2073	6/26/2015 MC SWRPC	North Walpole	Church Street	West	Unknown	Concrete	Fair	No	Granite	Fair	No	4.0	None	None	36 inches to 60 inches	Greater than 80 inches	Less than 0.25 inches	No	2.0 Less than or equal to 2%	2.0	1.0	31	82
579	2078	6/26/2015 MC SWRPC	North Walpole	Ash Street	South	Unknown	Concrete	Fair	No	None	N/A	No	1.5	None	None	36 inches to 60 inches	Greater than 80 inches	Less than 0.25 inches	No	2.0 Less than or equal to 2%	2.0	1.0	31	82
601	2100	6/26/2015 MC SWRPC	North Walpole	Brady Street	North	Unknown	Concrete	Fair	No	None	N/A	No	0.5	None	None	36 inches to 60 inches	Greater than 80 inches	Less than 0.25 inches	No	3.1 Less than or equal to 2%	2.0	1.0	31	82
616	2115	6/26/2015 MC SWRPC	North Walpole	Kilean Street	Northwest	Unknown	Concrete	Good	No	Granite	Good	No	5.0	Other	None	36 inches to 60 inches	Greater than 80 inches	Less than 0.25 inches	No	6.0 Greater than 2%	8.0	1.0	31	82
4983	42798	11/2/2015 Melendy district one	Colebrook	Rte26	North	Unknown	Asphalt	Fair	No	Granite	Good	No	0.0	Grass Strip	None	36 inches to 60 inches	Greater than 80 inches	0.25 inches to 0.50 inches	No	3.0 Less than or equal to 2%	1.0	1.0	31	82
6150	0	11/25/2015 Nichols district 1	Gorham	Rte 16	South-West	Unknown	Asphalt	Good	No	Granite	Good	No	1.0	None	None	36 inches to 60 inches	Greater than 80 inches	0.25 inches to 0.50 inches	No	2.0 Greater than 2%	7.0	1.0	31	82
6301	0	12/7/2015 Wilkinson District 1	Jefferson	Rte. 2	South-West	Unknown	Asphalt	Good	No	Asphalt	Good	No	1.0	Bicycle Lane	None	36 inches to 60 inches	Greater than 80 inches	0.25 inches to 0.50 inches	No	2.0 Greater than 2%	1.0	1.0	31	82
6313	0	12/1/2015 Nichols district 1	Groveton	Rte 3	East	Unknown	Concrete	Good	No	Granite	Good	No	4.0	None	None	36 inches to 60 inches	Greater than 80 inches	Less than 0.25 inches	No	0.4 Greater than 2%	1.0	1.0	31	82
6318	0	12/7/2015 Nichols district 1	Groveton	Rte 3	East	Unknown	Concrete	Fair	No	Granite	Fair	No	5.0	Parking Spaces	None	36 inches to 60 inches	Greater than 80 inches	Less than 0.25 inches	No	0.0 Less than or equal to 2%	0.0	1.0	31	82
6399	0	12/9/2015 Wilkinson District 1	Carroll	Rte. 302	South	Unknown	Asphalt	Good	No	Granite	Good	No	6.0	None	None	36 inches to 60 inches	Greater than 80 inches	0.25 inches to 0.50 inches	No	4.0 Greater than 2%	3.0	1.0	31	82
6400	0	12/9/2015 Wilkinson District 1	Carroll	Rte. 3	West	Unknown	Asphalt	Good	No	Granite	Good	No	4.0	None	None	36 inches to 60 inches	Greater than 80 inches	0.25 inches to 0.50 inches	No	4.0 Greater than 2%	0.0	1.0	31	82
6634	0	12/17/2015 Wilkinson District 1	Warren	Rte.118	East	Unknown	Asphalt	Good	No	Granite	Good	No	5.0	Bicycle Lane	None	36 inches to 60 inches	Greater than 80 inches	0.25 inches to 0.50 inches	No	2.0 Greater than 2%	5.0	1.0	31	82
6635	0	12/17/2015 Wilkinson District 1	Warren	Rte.118	East	Unknown	Asphalt	Good	No	Granite	Good	No	5.0	Bicycle Lane	None	36 inches to 60 inches	Greater than 80 inches	0.25 inches to 0.50 inches	No	1.0 Greater than 2%	0.0	1.0	31	82
6699	0	12/22/2015 Wilkinson District 1	Warren	Rte.118	West	Unknown	Asphalt	Good	No	Granite	Good	No	4.0	Bicycle Lane	None	36 inches to 60 inches	Greater than 80 inches	0.25 inches to 0.50 inches	No	2.0 Greater than 2%	10.0	1.0	31	82
6780	0	1/6/2016 Melendy dist1	Woodstock	Rte 3	West	Unknown	Asphalt	Good	No	Granite	Good	No	6.0	Parking Spaces	None	36 inches to 60 inches	Greater than 80 inches	0.25 inches to 0.50 inches	No	2.0 Greater than 2%	7.0	1.0	31	82
6781	0	1/6/2016 Melendy dist1	Woodstock	Rte 3	West	Unknown	Asphalt	Good	No	Granite	Good	No	6.0	Parking Spaces	None	36 inches to 60 inches	Greater than 80 inches	0.25 inches to 0.50 inches	No	2.0 Greater than 2%	3.0	1.0	31	82
7885	0	1/25/2016 Nichols district 1	Jackson	Rte 16	East	Unknown	Asphalt	Good	No	Granite	Fair	No	1.0	Bicycle Lane	None	36 inches to 60 inches	Greater than 80 inches	0.25 inches to 0.50 inches	No	3.0 Greater than 2%	0.0	1.0	31	82
8989	0	2/18/2016 Wilkinson District 1	Conway	Rte. 153	West	Unknown	Asphalt	Good	No	Granite	Good	No	6.0	None	None	36 inches to 60 inches	Greater than 80 inches	0.25 inches to 0.50 inches	No	1.0 Greater than 2%	2.0	1.0	31	82
495	1059	6/17/2015 Sandt DOT	Allenstown	Main	Northwest	Unknown	Asphalt	Good	No	Granite	Good	No	7.0	Parking Spaces	None	36 inches to 60 inches	Unlimited	Greater than 0.50 inches	No	5.9 Less than or equal to 2%	1.0	1.0	30	82
496	1060	6/17/2015 Sandt DOT	Allenstown	Main	East	Unknown	Asphalt	Good	No	Granite	Good	No	6.0	None	None	36 inches to 60 inches	Unlimited	Greater than 0.50 inches	No	5.1 Less than or equal to 2%	0.0	1.0	30	82
511	1075	6/22/2015 Sandt DOT	Hooksett	Main	North	Unknown	Asphalt	Good	No	Granite	Fair	No	0.0		None	36 inches to 60 inches	Unlimited	Greater than 0.50 inches	No	1.0 Less than or equal to 2%	0.0	1.0	30	82
513	1077	6/22/2015 Sandt DOT	Hooksett	College Park	South	Unknown	Asphalt	Good	No	Granite	Good	No	4.0	None	None	36 inches to 60 inches	Unlimited	Greater than 0.50 inches	No	1.0 Less than or equal to 2%	0.0	1.0	30	82
515	1080	6/22/2015 Sandt DOT	Hooksett	Northbound rest area, Hooksett	West	Unknown	Asphalt	Good	No	Granite	Good	No	8.0	None	Fixed Sign	36 inches to 60 inches	Unlimited	Level	No	0.0 Less than or equal to 2%	1.0	1.0	30	82
516	1081	6/22/2015 Sandt DOT	Hooksett	Hooksett rest area south bound		Unknown	Asphalt	Good	No	Granite	Good	No	6.0	None	Fixed Object	36 inches to 60 inches	Unlimited	Level	No	0.0 Less than or equal to 2%	4.0	1.0	30	82
532	1098	6/24/2015 Sandt DOT	Hooksett	Daniel Webster Hwy	Southeast	Unknown	Asphalt	Good	No	Granite	Good	No	5.0	Grass Strip	None	36 inches to 60 inches	Unlimited	Greater than 0.50 inches	No	2.0 Less than or equal to 2%	0.0	1.0	30	82
533	1099	6/24/2015 Sandt DOT	Hooksett	Daniel Webster Hwy	East	Unknown	Asphalt	Good	No	Granite	Good	No	5.0	Grass Strip	None	36 inches to 60 inches	Unlimited	Greater than 0.50 inches	No	2.0 Less than or equal to 2%	0.0	1.0	30	82
554	2053	6/26/2015 Sandt DOT	Manchester	Daniel Webster Hwy	Northwest	Unknown	Asphalt	Good	No	Granite	Good	No	3.0	None	Fixed Sign	36 inches to 60 inches	Unlimited	Level	No	0.0 Less than or equal to 2%	0.0	1.0	30	82
555	2054	6/26/2015 Sandt DOT	Manchester	Daniel Webster Hwy	Southeast	Unknown	Asphalt	Good	No	Granite	Good	No	6.0	None	Utility Pole	36 inches to 60 inches	Unlimited	Level	No	0.0 Less than or equal to 2%	0.0	1.0	30	82
645	2144	7/2/2015 Sandt DOT	Manchester	Londonderry Tpke	West	Unknown	Asphalt	Good	No	Granite	Good	No	4.0	None	None	36 inches to 60 inches	Unlimited	Greater than 0.50 inches	No	2.0 Less than or equal to 2%	1.0	1.0	30	82
646	2145	7/2/2015 Sandt DOT	Manchester	Londonderry Tpke	West	Unknown	Asphalt	Good	No	Granite	Good	No	6.0	None	Utility Pole	36 inches to 60 inches	Unlimited	Level	No	0.0 Less than or equal to 2%	1.0	1.0	30	82
647	2146	7/2/2015 Sandt DOT	Manch	Londonderry Tpke	West	Unknown	Asphalt	Good	No	Granite	Good	No	6.0	None	None	36 inches to 60 inches	Unlimited	Level	Yes	0.0 Less than or equal to 2%	3.0	1.0	30	82
649	2148	7/6/2015 Sandt DOT	Manchester	S Willow Street	East	Unknown	Asphalt	Good	No	Granite	Good	No	5.0	None	None	36 inches to 60 inches	Unlimited	Greater than 0.50 inches	No	3.0 Less than or equal to 2%	1.0	1.0	30	82
650	2149	7/6/2015 Sandt DOT	Manchester	S Willow Street	East	Unknown	Asphalt	Good	No	Granite	Good	No	6.0	None	None	36 inches to 60 inches	Unlimited	Greater than 0.50 inches	No	2.0 Less than or equal to 2%	2.0	1.0	30	82
651	2150	7/6/2015 Sandt DOT	Manchester	S Willow Street	East	Unknown	Asphalt	Good	No	Granite	Good	No	5.0	None	None	36 inches to 60 inches	Unlimited	Greater than 0.50 inches	No	2.0 Less than or equal to 2%	0.0	1.0	30	82
652	2151	7/6/2015 Sandt DOT	Manchester	S Willow Street	East	Unknown	Asphalt	Good	No	Granite	Good	No	5.0	None	None	36 inches to 60 inches	Unlimited	Greater than 0.50 inches	No	2.0 Less than or equal to 2%	3.0	1.0	30	82
655	2154	7/6/2015 Sandt DOT	Manchester	S Willow Street	South	Unknown	Asphalt	Good	No	Granite	Good	No	5.0	None	None	36 inches to 60 inches	Unlimited	Greater than 0.50 inches	No	3.0 Less than or equal to 2%	0.0	1.0	30

6429	0	12/10/2015	Nichols district 1	Lancaster	Middle street	North	Unknown	Asphalt	Good	No	None	N/A	No	0.0 Grass Strip	None	36 inches to 60 inches	Greater than 80 inches	Less than 0.25 inches	No	5.5 Greater than 2%	0.0	1.0	27	84
6485	0	12/14/2015	Sandt DOT	Bristol	Rt 104	South	Unknown	Concrete	Good	No	Granite	Good	No	5.0 None	None	36 inches to 60 inches	Greater than 80 inches	Level	No	2.0 Greater than 2%	3.0	1.0	27	84
6515	0	12/14/2015	Patch district 1	Littleton	Rte 302	North	Unknown	Asphalt	Good	No	Granite	Good	No	6.0 Bicycle Lane	None	36 inches to 60 inches	Greater than 80 inches	Less than 0.25 inches	No	4.0 Greater than 2%	0.0	1.0	27	84
6517	0	12/14/2015	Patch district 1	Littleton	Rte 302	North	Unknown	Asphalt	Good	No	Granite	Good	No	9.0 Bicycle Lane	None	36 inches to 60 inches	Greater than 80 inches	Less than 0.25 inches	No	2.0 Greater than 2%	1.0	1.0	27	84
6737	0	12/28/2015	NM SWRPC	Hinsdale	School st	West	Unknown	Concrete	Good	No	Granite	Good	No	0.0 None	None	36 inches to 60 inches	Greater than 80 inches	Level	No	7.0 Greater than 2%	2.0	1.0	27	84
6740	0	12/28/2015	NM SWRPC	Hinsdale	School st	East	Unknown	Asphalt	Good	No	Granite	Good	No	5.0 None	None	36 inches to 60 inches	Greater than 80 inches	Less than 0.25 inches	No	2.0 Greater than 2%	1.0	1.0	27	84
6798	0	1/7/2016	Nichols district 1	Woodsville	Rte 10	West	Unknown	Concrete	Good	No	None	N/A	No	0.0 None	None	36 inches to 60 inches	Greater than 80 inches	Level	No	2.0 Greater than 2%	0.0	1.0	27	84
7858	0	1/14/2016	Wilkinson District 1	Lincoln	Rte 112	North-West	Unknown	Concrete	Good	No	Granite	Good	No	4.0 None	None	36 inches to 60 inches	Greater than 80 inches	Level	No	2.0 Greater than 2%	1.0	1.0	27	84
7863	0	1/14/2016	Wilkinson District 1	Lincoln	Rte 112	North-West	Unknown	Concrete	Good	No	Granite	Good	No	4.0 None	None	36 inches to 60 inches	Greater than 80 inches	Level	No	1.0 Greater than 2%	1.0	1.0	27	84
7878	0	1/25/2016	Wilkinson District 1	Conway	Rte. 302	South	Unknown	Concrete	Good	No	Granite	Good	No	6.0 Bicycle Lane	None	36 inches to 60 inches	Greater than 80 inches	Level	No	1.0 Greater than 2%	2.0	1.0	27	84
7881	0	1/25/2016	Nichols district 1	Jackson	Rte 16	East	Unknown	Asphalt	Fair	No	Granite	Fair	No	0.0 None	None	36 inches to 60 inches	Greater than 80 inches	Less than 0.25 inches	No	2.0 Less than or equal to 2%	0.0	1.0	27	84
7882	0	1/25/2016	Nichols district 1	Jackson	Rte 16	East	Unknown	Asphalt	Fair	No	None	N/A	No	0.0 None	None	36 inches to 60 inches	Greater than 80 inches	Less than 0.25 inches	No	2.0 Less than or equal to 2%	0.0	1.0	27	84
7883	0	1/25/2016	Nichols district 1	Jackson	Rte 16	East	Unknown	Asphalt	Fair	No	Granite	Fair	No	1.0 None	None	36 inches to 60 inches	Greater than 80 inches	Less than 0.25 inches	No	2.0 Less than or equal to 2%	0.0	1.0	27	84
8985	0	2/11/2016	Wilkinson District 1	Conway	Rest Area - Intervale Vista - Rtes. 16 & 302	West	Unknown	Concrete	Good	No	Granite	Good	No	0.0 Parking Spaces	None	36 inches to 60 inches	Greater than 80 inches	Level	No	1.0 Greater than 2%	0.0	1.0	27	84
8994	0	2/22/2016	Sandt DOT	Meredith	Rt 3	South-West	Unknown	Concrete	Good	No	Granite	Good	No	5.0 Grass Strip	None	36 inches to 60 inches	Greater than 80 inches	Level	No	6.0 Greater than 2%	2.0	1.0	27	84
9093	0	3/17/2016	Wilkinson District 1	Lincoln	Rte 112	South-East	Unknown	Concrete	Good	No	Granite	Good	No	3.00000000000	Bicycle Lane	None	36 inches to 60 inches	Greater than 80 inches	Level	3.0 Greater than 2%	1.0	1.0	27	84
9094	0	3/17/2016	Wilkinson District 1	Lincoln	Rte 112	South-East	Unknown	Concrete	Good	No	Granite	Good	No	4.00000000000	Bicycle Lane	None	36 inches to 60 inches	Greater than 80 inches	Level	5.0 Greater than 2%	1.0	1.0	27	84
4561	41534	9/17/2015	Sandt DOT	Newport	Rt 10	West	Unknown	Brick	Good	No	Granite	Good	No	4.0 None	None	Greater than 60 inches	Unlimited	Less than 0.25 inches	No	3.0 Greater than 2%	0.0	1.0	26	85
4281	41252	8/11/2015	Sandt DOT	Nashua	Amherst Street	South	Unknown	Asphalt	Good	No	Granite	Good	No	5.0 None	Vegetation	36 inches to 60 inches	Unlimited	Level	No	1.0 Less than or equal to 2%	0.0	1.0	26	85
4589	41562	9/22/2015	Sandt DOT	Epping	Rt 125	West	Unknown	Asphalt	Good	No	Granite	Good	No	6.0 None	Vegetation	36 inches to 60 inches	Unlimited	Level	No	1.0 Less than or equal to 2%	0.0	1.0	26	85
4590	41563	9/22/2015	Sandt DOT	Epping	Rt 125	West	Unknown	Asphalt	Good	No	Granite	Good	No	6.0 None	Vegetation	36 inches to 60 inches	Unlimited	Level	No	1.0 Less than or equal to 2%	0.0	1.0	26	85
4709	41682	10/5/2015	Sandt DOT	Rochester	Gonic Road	West	Unknown	Asphalt	Good	No	Granite	Good	No	6.0 None	Vegetation	36 inches to 60 inches	Unlimited	Level	No	2.0 Less than or equal to 2%	2.0	1.0	26	85
4786	41759	10/12/2015	Sandt DOT	Rye	Ocean Blvd.	Southeast	Unknown	Asphalt	Good	No	None	N/A	No	0.0 None	Vegetation	36 inches to 60 inches	Unlimited	Level	No	3.0 Less than or equal to 2%	0.0	1.0	26	85
596	2095	6/26/2015	MC SWRPC	North Walpole	Down Up Road	West	Unknown	Concrete	Good	No	None	N/A	No	2.7 None	None	36 inches to 60 inches	Less than 80in	Level	No	8.1 Less than or equal to 2%	0.0	1.0	26	85
667	2166	7/7/2015	Sandt DOT	Concord	Foundry Street	East	Unknown	Concrete	Good	No	None	N/A	No	0.0 None	None	36 inches to 60 inches	Less than 80in	Level	No	0.0 Less than or equal to 2%	0.0	1.0	26	85
4876	42689	10/22/2015	Sandt DOT	Portsmouth	Pease Blvd	North	Unknown	Asphalt	Good	Yes	Granite	Good	No	4.0 Grass Strip	None	Greater than 60 inches	Unlimited	Level	No	1.0 Less than or equal to 2%	0.0	1.0	25	85
4877	42690	10/22/2015	Sandt DOT	Portsmouth	Pease Blvd	North	Unknown	Asphalt	Good	Yes	Granite	Good	No	4.0 Grass Strip	None	Greater than 60 inches	Unlimited	Level	No	1.0 Less than or equal to 2%	0.0	1.0	25	85
4199	34727	7/31/2015	Sandt DOT	Warner	W Main Street	North	Unknown	Brick	Good	No	Granite	Good	No	8.0 Parking Spaces	None	36 inches to 60 inches	Greater than 80 inches	Level	No	1.0 Less than or equal to 2%	0.0	1.0	25	85
738	2237	7/14/2015	Sandt DOT	Nashua	Connector WB	North	Unknown	Concrete	Good	No	None	N/A	No	0.0 None	None	Greater than 60 inches	Unlimited	Greater than 0.50 inches	No	0.0 Less than or equal to 2%	0.0	1.0	24	86
4668	41641	9/29/2015	Sandt DOT	Durham	Main Street	North	Unknown	Concrete	Good	No	Granite	Good	No	5.0 Bicycle Lane	None	Greater than 60 inches	Unlimited	Level	Yes	2.0 Less than or equal to 2%	0.0	1.0	24	86
4669	41642	9/29/2015	Sandt DOT	Durham	Main Street	South	Unknown	Concrete	Good	No	Granite	Good	No	5.0 Bicycle Lane	None	Greater than 60 inches	Unlimited	Level	Yes	2.0 Less than or equal to 2%	0.0	1.0	24	86
4670	41643	9/29/2015	Sandt DOT	Durham	Main Street	South	Unknown	Concrete	Good	No	Granite	Good	No	5.0 Bicycle Lane	None	Greater than 60 inches	Unlimited	Level	Yes	7.0 Less than or equal to 2%	0.0	1.0	24	86
4770	41743	10/8/2015	Sandt DOT	Durham	Main Street	South	Unknown	Concrete	Good	No	Granite	Good	No	5.0 Grass Strip	None	Greater than 60 inches	Unlimited	Level	Yes	4.0 Less than or equal to 2%	0.0	1.0	24	86
5202	0	11/20/2015	Sandt DOT	Wolfeboro	Rt 109	North	Unknown	Concrete	Good	No	Granite	Good	No	5.0 Parking Spaces	Utility Pole	Greater than 60 inches	Unlimited	Level	No	2.0 Less than or equal to 2%	0.0	1.0	24	86
5203	0	11/20/2015	Sandt DOT	Wolfeboro	Rt 109	North	Unknown	Concrete	Good	No	Granite	Good	No	2.0 Parking Spaces	Utility Pole	Greater than 60 inches	Unlimited	Level	No	2.0 Less than or equal to 2%	0.0	1.0	24	86
611	2110	6/26/2015	MC SWRPC	North Walpole	East Street	Southeast	Unknown	Concrete	Fair	No	None	N/A	No	0.5 None	None	36 inches to 60 inches	Unlimited	Level	No	4.0 Less than or equal to 2%	0.0	1.0	24	86
4354	41326	8/18/2015	Sandt DOT	Bennington	Rt 31	South	Unknown	Concrete	Good	No	Granite	Good	No	6.0 None	None	36 inches to 60 inches	Unlimited	Level	No	5.0 Greater than 2%	0.0	1.0	24	86
4355	41327	8/18/2015	Sandt DOT	Bennington	Rt 31	South	Unknown	Concrete	Good	No	Granite	Good	No	5.0 None	None	36 inches to 60 inches	Unlimited	Level	No	5.0 Greater than 2%	0.0	1.0	24	86
4358	41330	8/18/2015	Sandt DOT	Greenfield	Forest	North	Unknown	Asphalt	Good	No	Granite	Good	No	6.0 Parking Spaces	None	36 inches to 60 inches	Unlimited	Less than 0.25 inches	No	6.0 Greater than 2%	0.0	1.0	24	86
4364	41336	8/19/2015	Sandt DOT	Peterborough	Main	North	Unknown	Concrete	Good	No	Granite	Good	No	4.0 Parking Spaces	None	36 inches to 60 inches	Unlimited	Level	No	1.0 Greater than 2%	0.0	1.0	24	86
4433	41405	8/28/2015	Sandt DOT	Troy	School Stret	North	Unknown	Concrete	Good	No	Granite	Good	No	6.0 None	None	36 inches to 60 inches	Unlimited	Level	No	3.0 Greater than 2%	0.0	1.0	24	86
4440	41412	8/31/2015	Sandt DOT	Hinsdale	Brattleboro Road	North	Unknown	Concrete	Good	No	Granite	Good	No	4.0 None	None	36 inches to 60 inches	Unlimited	Level	No	7.0 Greater than 2%	0.0	1.0	24	86
4638	41611	9/25/2015	Sandt DOT	Exeter	Rt 27	Northeast	Unknown	Concrete	Good	No	Granite	Good	No	5.0 None	None	36 inches to 60 inches	Unlimited	Level	No	0.0 Greater than 2%	0.0	1.0	24	86
4806	41779	10/14/2015	Sandt DOT	Portsmouth	Rt 1	West	Unknown	Concrete	Good	No	Granite	Good	No	6.0 None	None	36 inches to 60 inches	Unlimited	Level	No	3.0 Greater than 2%	3.0	1.0	24	86
4807	41780	10/14/2015	Sandt DOT	Portsmouth	Rt 1	East	Unknown	Concrete	Good	No	Granite	Good	No	6.0 None	None	36 inches to 60 inches	Unlimited	Level	No	3.0 Greater than 2%	0.0	1.0	24	86
4808	41781	10/14/2015	Sandt DOT	Portsmouth	Rt 1	East	Unknown	Concrete	Good	No	Granite	Good	No	6.0 None	None	36 inches to 60 inches	Unlimited	Level	No	4.0 Greater than 2%	4.0	1.0	24	86
4809	41782	10/14/2015	Sandt DOT	Portsmouth	Rt 1	East	Unknown	Asphalt	Good	No	Granite	Good	No	6.0 None	None	36 inches to 60 inches	Unlimited	Less than 0.25 inches	No	3.0 Greater than 2%	3.0	1.0	24	86
4811	41784	10/14/2015	Sandt DOT	Portsmouth	Rt 1	East	Unknown	Asphalt	Good	No	Granite	Good	No	6.0 None	None	36 inches to 60 inches	Unlimited	Less than 0.25 inches	No	4.0 Greater than 2%	3.0	1.0	24	86
4881	42694	10/23/2015	Sandt DOT	Newmarket	Exeter Road	West	Unknown	Concrete	Good	No	Granite	Good	No	5.0 None	None	36 inches to 60 inches	Unlimited	Level	No	1.0 Greater than 2%	1.0	1.0	24	86
4882	42695	10/23/2015	Sandt DOT	Newmarket	Exeter Road	West	Unknown	Concrete	Good	No	Granite	Good	No	5.0 None	None	36 inches to 60 inches	Unlimited	Level	No	1.0 Greater than 2%	2.0	1.0	24	86
4883	42696	10/23/2015	Sandt DOT	Newmarket	Exeter Road	West	Unknown	Concrete	Good	No	Granite	Good	No	5.0 None	None	36 inches to 60 inches	Unlimited	Level	No	1.0 Greater than 2%	3.0	1.0	24	86
4884	42697	10/23/2015	Sandt DOT	Newmarket	Exeter Road	West	Unknown	Concrete	Good	No	Granite	Good	No	6.0 None	None	36 inches to 60 inches	Unlimited	Level	No	2.0 Greater than 2%	3.0	1.0	24	86
4906	42719	10/26/2015	Wilkinson district 1	Stewartstown	Route 3	West	Unknown	Concrete	Fair	No	None	N/A	No	0.0 Parking Spaces	None	36 inches to 60 inches	Unlimited	Level	No	4.0 Less than or equal to 2%	0.0	1.0	24	86
5049	42944	10/29/2015	Sandt DOT	Hampton	Ocean Blvd	W	Unknown	Concrete	Good	No	None	N/A	No	0.0 Parking Spaces	None	36 inches to 60 inches	Unlimited	Level	No	1.0 Greater than 2%	0.0	1.0	24	86
6459	0	11/10/2015	Sandt DOT	Hampton	Rt 1	East	Unknown	Concrete	Good	No	Granite	Good	No	3.0 Grass Strip	None	36 inches to 60 inches	Unlimited	Level	No	4.0 Greater than 2%	0.0	1.0	24	86
6460	0	11/10/2015	Sandt DOT	Hampton	Rt 1	East	Unknown	Concrete	Good	No	Granite	Good	No	3.0 Grass Strip	None	36 inches to 60 inches	Unlimited	Level	No	3.0 Greater than 2%	0.0	1.0	24	86
6461	0	11/10/2015	Sandt DOT	Hampton	Rt 1	East	Unknown	Concrete	Good	No	Granite	Good	No	3.0 Grass Strip	None	36 inches to 60 inches	Unlimited	Level	No	3.0 Greater than 2%	24.0	1.0	24	86
6464	0	11/10/2015	Sandt DOT	Hampton	Rt 1	East	Unknown	Concrete	Good	No	Granite	Good	No	3.0 None	None	36 inches to 60 inches	Unlimited	Level	No	4.0 Greater than 2%	6.0	1.0	24	86
630	2129	6/30/2015	Sandt DOT	Manchester	Hanover Street	South	Unknown	Asphalt	Good	No	Granite	Good	No	5.0 Parking Spaces	None	Greater than 60 inches	Greater than 80 inches	Greater than 0.50 inches	No	4.0 Less than or equal to 2%	0.0	1.0	23	86
839	3207	7/22/2015	Sandt DOT	Derry	E Broadway	Southeast	Unknown	Asphalt	Good	No	Granite	Good	No	6.0 Grass Strip	Utility Pole	Greater than 60 inches	Greater than 80 inches	Level	No	1.0 Less than or equal to 2%	1.0	1.0	23	86
840	3208	7/22/2015	Sandt DOT	Derry	E Broadway	Southeast	Unknown	Asphalt	Good	No	Granite	Good	No	6.0 Parking Spaces	Utility Pole	Greater than 60 inches	Greater than 80 inches	Level	No	1.0 Less than or equal to 2%	1.0	1.0	23	86
841	3209	7/22/2015	Sandt DOT	Derry	W Broadway	Southeast	Unknown	Asphalt	Good	No	Granite	Good	No	6.0 Parking Spaces	Utility Pole	Greater than 60 inches	Greater than 80 inches	Level	No	1.0 Less than or equal to 2%	0.0	1.0	23	86
842	3210	7/22/2015	Sandt DOT	Derry	W Broadway	Southeast	Unknown	Asphalt	Good	No	Granite	Good	No	6.0 Parking Spaces	Utility Pole	Greater than 60 inches	Greater than 80 inches	Level	No	1.0 Less than or equal to 2%	1.0	1.0	23	86
6256	0	12/3/2015	Sandt DOT	Holderness	Bridge Street	North	Unknown	Asphalt	Good	No	Granite	Good	No	2.0 Grass Strip	None	Greater than 60 inches	Greater than 80 inches	Level	Yes	7.0 Less than or equal to 2%	0.0	1.0	23	86
587	2086	6/26/2015	MC SWRPC	North Walpole	Church Street	West	Unknown	Asphalt	Good	No	Granite	Good	No	2.3 None	None	36 inches to 60 inches	Greater than 80 inches	Level	No	2.0 Greater than 2%	1.0	1.0	23	86
589	2088	6/26/2015	MC SWRPC	North Walpole	Church Street	West	Unknown	Asphalt	Good	No	Granite	Good	No	4.0 None	None	36 inches to 60 inches	Greater than 80 inches	Level	No	2.0 Greater than 2%	3.0	1.0	23	86
592	2091	6/26/2015	MC SWRPC	North Walpole	Church Street	East	Unknown	Asphalt	Good	No	Granite	Good	No	3.0 None	None	36 inches to 60 inches	Greater than 80 inches	Level	No	2.0 Greater than 2%	2.0	1.0	23	86
599	2098	6/26/2015	MC SWRPC	North Walpole	Church Street	East	Unknown	Asphalt	Good	No	Granite	Good	No	2.8 None	None	36 inches to 60 inches	Greater than 80 inches	Level	No	1.0 Greater than 2%	3.0	1.0	23	86
600	2099	6/26/2015	MC SWRPC	North Walpole	Church Street	West	Unknown	Asphalt	Good	No	Granite	Good	No	3.5 None	None	36 inches to 60 inches	Greater than 80 inches	Level	No	1.0 Greater than 2%	2.0	1.0	23	86
606	2105	6/26/2015	MC SWRPC	North Walpole	Church Street	West	Unknown	Asphalt	Good	No	Granite	Good	No	1.0 None	None	36 inches to 60 inches	Greater than 80 inches	Level	No	3.0 Greater than 2%	3.0	1.0	23	86
654	2113	6/26/2015	MC SWRPC	North Walpole	Silver Street	Southwest	Unknown	Asphalt	Good	No	Granite	Good	No	4.0 None	None	36 inches to 60 inches	Greater than 80 inches	Level	No	6.3 Greater than 2%	3.0	1.0	23	86
853	3221	7/23/2015	Sandt DOT	Derry	E Broadway	Northwest	Unknown	Asphalt	Good	No	Granite	Good	No	0.0 None	None	36 inches to 60 inches	Greater than 80 inches	Level	No	2.0 Greater than 2%	3.0	1.0	23	86
854	3222	7/23/2015	Sandt DOT	Derry	E Broadway	Northwest	Unknown	Asphalt	Good	No	Granite	Good	No	4.0 None	None	36 inches to 60 inches	Greater than 80 inches	Level	No	2.0 Greater than 2%	3.0	1.0	23	86
880	3248	7/24/2015	Sandt DOT	Londonderry	Rockingham Road	North	Unknown	Asphalt	Good	No	Granite	Good	No	6.0 Grass Strip	None	36 inches to 60 inches	Greater than 80 inches	Level	No	5.0 Greater than 2%	1.0	1.0	23	86
4190	34718	7/30/2015	Sandt DOT	Brookline	Milford Street	East	Unknown	Asphalt	Good	No	None	N/A	No	0.0 Grass Strip	None	36 inches to 60 inches	Greater than 80 inches	Level	No	6.0 Greater than 2%	0.0	1.0	23	86
4191	34719	7/30/2015	Sandt DOT	Brookline	Milford Street	East	Unknown	Asphalt	Good	No	Granite	Good	No	3.0 Grass Strip	None	36 inches to 60 inches	Greater than 80 inches	Level	No	4.0 Greater than 2%	7.0	1.0	23	86
4272	41242	8/10/2015	Sandt DOT	Hillsborough	Center	East	Unknown	Asphalt	Good	No	Granite	Good	No	4.0 Grass Strip	None	36 inches to 60 inches	Greater than 80 inches	Level	No	8.0 Greater than 2%	0.0	1.0	23	86
4320	41292	8/14/2015	Sandt DOT	Francestown	Main Street	Northeast	Unknown	Asphalt	Good	No	Granite	Good	No	5.0 Parking Spaces	None	36 inches to 60 inches	Greater than 80 inches	Level	No	5.0 Greater than 2%	4.0	1.0	23	86
4321	41293	8/14/2015	Sandt DOT	Francestown	Main Street	Northeast	Unknown	Asphalt	Good	No	Granite	Good	No	5.0 None	None	36 inches to 60 inches	Greater than 80 inches	Level	No	5.0 Greater than 2%	12.0	1.0	23	86
4338	41310	8/17/2015	Sandt DOT	Antrim	Main Street	West	Unknown	Asphalt	Good	No	Granite	Good	No	4.0 Parking Spaces	None	36 inches to 60 inches	Greater than 80 inches	Level	No	0.0 Greater than 2%	0.0	1.0	23	86
4510	41483	9/14/2015	Sandt DOT	Charlestown	Rt 12	East	Unknown	Asphalt	Good	No	None	N/A	No	0.0 Parking Spaces	None	36 inches to 60 inches	Greater than 80 inches	Level	No	2.0 Greater than 2%	0.0	1.0	23	86
4515	41488	9/14/2015	Sandt DOT	Charlestown	Rt 12	East	Unknown	Asphalt	Good	No	None	N/A	No	0.0 Parking Spaces	None	36 inches to 60 inches	Greater than 80 inches	Level	No	2.0 Greater than 2%	0.0	1.0	23	86
4607	41580	9/24/2015	Sandt DOT	Lebanon	S Main Street	Northwest	Unknown	Asphalt	Good	No	Granite	Good	No	7.0 None	None	36 inches to 60 inches	Greater than 80 inches	Level	No	0.0 Greater than 2%	0.0	1.0	23	86
4608	41581	9/24/2015	Sandt DOT	Lebanon	S Main Street	Northwest	Unknown	Asphalt	Good	No	Granite	Good	No	7.0 None	None	36 inches to 60 inches	Greater than 80 inches	Level	No	0.0 Greater than 2%	0.0	1.0	23	86
4609	41582	9/24/2015	Sandt DOT	Lebanon	S Main Street	Northwest	Unknown	Asphalt	Good	No	Granite	Good	No	7.0 None	None	36 inches to 60 inches	Greater than 80 inches	Level	No	0.0 Greater than 2%	0.0	1.0	23	86
4610	41583	9/24/2015	Sandt DOT	Lebanon	S Main Street	Northwest	Unknown	Asphalt	Good	No	Granite	Good	No	7.0 None	None	36 inches to 60 inches	Greater than 80 inches	Level	No	0.0 Greater than 2%	0.0	1.0	23	86
4656	41629	9/28/2015	Sandt DOT	Farmington	Main Street	South	Unknown	Asphalt	Good	No	None	N/A	No	0.0 Grass Strip	None	36 inches to 60 inches	Greater than 80 inches	Level	No	6.0 Greater than 2%	0.0	1.0	23	86
4657	41630	9/28/2015	Sandt DOT	Farmington	Main Street	South	Unknown	Asphalt	Good	No	None	N/A	No	0.0 Grass Strip	None	36 inches to 60 inches	Greater than 80 inches	Level	No	6.0 Greater than 2%	0.0	1.0	23	86
4662	41635	9/28/2015	Sandt DOT	Milton	Dawson Street	West	Unknown	Asphalt	Good	No	None	N/A	No	0.0 Grass Strip	None	36 inches to 60 inches	Greater than 80 inches	Level	No	2.0 Greater than 2%	0.0	1.0	23	86
4728	41701	10/5/2015	Sandt DOT	Rollinsford	Main Street	South	Unknown	Asphalt	Good	No	Granite	Good	No	4.0 None	None	36 inches to 60 inches	Greater than 80 inches	Level	No	3.0 Greater than 2%	2.0	1.0	23	86
4729	41702	10/5/2015	Sandt DOT	Rollinsford	Main Street	South	Unknown	Asphalt	Good	No	Granite	Good	No	4.0 None	None	36 inches to 60 inches	Greater than 80 inches	Level	No	3.0 Greater than 2%	2.0	1.0	23	86
4751	41724	10/6/2015	Sandt DOT	Dover	Durham Road	West	Unknown	Asphalt	Good	No	Granite	Good	No	3.0 None	None	36 inches to 60 inches	Greater than 80 inches	Level	No	3.0 Greater than 2%	2.0	1.0	23	86
4794	41767	10/12/2015	Sandt DOT	New Castle	Wentworth Road	South	Unknown	Asphalt	Good	No	Granite	Good	No	6.0 None	None	36 inches to 60 inches	Greater than 80 inches	Level	No	1.0 Greater than 2%	0.0	1.0	23	86
4795	41768	10/12/2015	Sandt DOT	New Castle	Wentworth Road	Southeast	Unknown	Asphalt	Good	No	Granite	Good	No	6.0 None	None	36 inches to 60 inches	Greater than 80 inches	Level	No	1.0 Greater than 2%	0.0	1.0	23	86
4982	42797	11/2/2015	Melendy district one	Colebrook	Rte26	North	Unknown	Asphalt	Good	No	Granite	Good	No	4.0 Parking Spaces	None	36 inches to 60 inches	Greater than 80 inches	Level	No	2.0 Greater than 2%	6.0	1.0	23	86
5092	0	11/13/2015	Sandt DOT	Canterbury	Canterbury Rest Area	East	Unknown	Asphalt	Good	No	Granite	Fair	No	5.0 None	None	36 inches to 60 inches	Greater than 80 inches	Level	No	0.0 Greater than 2%	1.0	1.0	23	86
5099	0	11/9/2015	NM SWRPC	Hinsdale	Main Street	North	Unknown	Asphalt	Good	No	Granite	Good	No	0.0 None	None	36 inches to 60 inches	Greater than 80 inches	Level	No	0.0 Greater than 2%	0.0	1.0	23	86
5100	0	11/9/2015	NM SWRPC	Hinsdale	Main Street	North	Unknown	Asphalt	Good	No	Granite	Good	Yes	6.0 None	None	36 inches to 60 inches	Greater than 80 inches	Level	No	0.0 Greater than 2%	4.0	1.0	23	86
5105	0	11/9/2015	NM SWRPC	Hinsdale	Depot St	East	Unknown	Asphalt	Good	No	Granite	Good	Yes	6.0 None	None	36 inches to 60 inches	Greater than 80 inches	Level	No	4.0 Greater than 2%	2.0	1.0	23	86
5114	0	11/10/2015	NM SWRPC	Hinsdale	Main St	North	Unknown	Asphalt	Good	No	Granite	Good	No	1.5 None	None	36 inches to 60 inches	Greater than 80 inches	Level	No	1.0 Greater than 2%	5.0	1.0	23	86
5137	0	11/18/2015	Sandt DOT	Ossipee	16B	South	Unknown	Asphalt	Good	No	Granite	Good	No	5.0 None	None	36 inches to 60 inches	Greater than 80 inches	Level	No	8.0 Greater than 2%	0.0	1.0	23	86
5140	0	11/18/2015	Sandt DOT	Ossipee	Main	North	Unknown	Asphalt	Good	No	Granite	Good	No	3.0 None	None	36 inches to 60 inches	Greater than 80 inches	Level	No	6.0 Greater than 2%	0.0	1.0	23	86
5141	0	11/18/2015	Sandt DOT	Ossipee	Main	South	Unknown	Asphalt	Good	No	Granite	Good	No	5.0 Parking Spaces	None	36 inches to 60 inches	Greater than 80 inches	Level	No	1.0 Greater than 2%	0.0	1.0	23	86
5142	0	11/18/2015	Sandt DOT	Ossipee	Main	South	Unknown	Asphalt	Good	No	Granite	Good	No	5.0 Parking Spaces	None	36 inches to 60 inches	Greater than 80 inches	Level	No	4.0 Greater than 2%	0.0	1.0	23	86
5143	0	11/18/2015	Sandt DOT	Ossipee	Main	South	Unknown	Asphalt	Good	No	Granite	Good	No	5.0 Parking Spaces	None	36 inches to 60 inches	Greater than 80 inches	Level	No	4.0 Greater than 2%	1.0	1.0	23	86
5144	0	11/18/2015	Sandt DOT	Ossipee	Main	North	Unknown	Asphalt	Good	No	Granite	Good	No	5.0 Parking Spaces	None	36 inches to 60 inches	Greater than 80 inches	Level	No	4.0 Greater than 2%	0.0	1.0	23	86
5147	0	11/18/2015	Sandt DOT	Ossipee	Rt 171	South	Unknown	Asphalt	Good	No	Asphalt	Good	No	4.0 Parking Spaces	None	36 inches to 60 inches	Greater than 80 inches	Level	No	2.0 Greater than 2%	0.0	1.0	23	86
6142	0	11/25/2015	Nichols district 1	Gorham	Rte 16	North-East	Unknown	Asphalt	Good	No	Granite	Fair	No	4.0 None	None	36 inches to 60 inches	Greater than 80 inches	Level	No	2.0 Greater than 2%	1.0	1.0	23	86
6143	0	11/25/2015	Nichols district 1	Gorham	Rte 16	North-East	Unknown	Asphalt	Good	No	Granite	Good	No	4.0 None	None	36 inches to 60 inches	Greater than 80 inches	Level	No	2.0 Greater than 2%	3.0	1.0	23	86
6149	0	11/25/2015	Nichols district 1	Gorham	Rte 16	West	Unknown	Asphalt	Good	No	Granite	Good	No	4.0 None	None	36 inches to 60 inches	Greater than 80 inches	Level	No	2.0 Greater than 2%	0.0	1.0	23	86
6164	0	11/25/2015	Sandt DOT	Alton	Rt 11	East	Unknown	Asphalt	Good	No	Granite	Good	No	5.0 None	None	36 inches to 60 inches	Greater than 80 inches	Level	No	3.0 Greater than 2%	9.0	1.0	23	86
6175	0	11/25/2015	Sandt DOT	Alton	Rt 11	South-West	Unknown	Asphalt	Good	No	None	N/A	No	0.0 Grass Strip	None	36 inches to 60 inches	Greater than 80 inches	Level	No	1.0 Greater than 2%	0.0	1.0	23	86
6235	0	12/3/2015	Sandt DOT	Campton	Livermore Rd	West	Unknown	Asphalt	Good	No	None	N/A	No	0.0 Grass Strip	None	36 inches to 60 inches	Greater than 80 inches	Level	No	3.0 Greater than 2%	0.0	1.0	23	86
6254	0	12/3/2015	Sandt DOT	Holderness	Bridge Street	North	Unknown	Asphalt	Good	No	Granite	Good	No	7.0 Grass Strip	None	36 inches to 60 inches

5138	0	11/18/2015 Sandt DOT	Ossipee	16B	Cottage Street-Rtes. 302,18,116	South	Unknown	Concrete	Good	No	Concrete	Good	No	5.0 None	None	36 inches to 60 inches	Unlimited	0.25 inches to 0.50 inches	No	3.0 Less than or equal to 2%	0.0	1.0	22	87
6590	0	12/16/2015 Wilkinson District 1	Littleton	Bridge St	North-East	Unknown	Brick	Good	No	Granite	Good	No	5.0 Parking Spaces	None	36 inches to 60 inches	Unlimited	Level	No	6.0 Less than or equal to 2%	1.0	1.0	22	87
7956	0	1/29/2016 Sandt DOT	Orford	Bridge St	North-East	Unknown	Concrete	Good	No	None	Good	No	0.0 None	None	36 inches to 60 inches	Unlimited	0.25 inches to 0.50 inches	No	2.0 Less than or equal to 2%	0.0	1.0	22	87
470	1034	6/12/2015 Sandt DOT	Concord	Noble Drive	South	NH_DOT	Asphalt	Good	No	Granite	Good	No	6.0 None	None	36 inches to 60 inches	Less than 80in	Level	No	0.0 Less than or equal to 2%	0.0	1.0	22	87
724	2223	7/13/2015 Sandt DOT	Nashua	East Dunstable Road	Southeast	Unknown	Asphalt	Good	No	Granite	Good	No	6.0 None	None	36 inches to 60 inches	Less than 80in	Level	No	2.0 Less than or equal to 2%	4.0	1.0	22	87
711	2210	7/13/2015 Sandt DOT	Nashua	East Dunstable Road	Southeast	Unknown	Concrete	Good	No	Granite	Good	No	6.0 None	None	Greater than 60 inches	Greater than 80 inches	Less than 0.25 inches	No	2.0 Greater than 2%	1.0	1.0	21	88
6784	0	1/6/2016 Melendy dist1	Woodstock	Rte 3	East	Unknown	Asphalt	Good	No	Granite	Good	No	8.0 Parking Spaces	None	Greater than 60 inches	Greater than 80 inches	0.25 inches to 0.50 inches	No	3.0 Greater than 2%	2.0	1.0	21	88
570	2069	6/26/2015 MC SWRPC	North Walpole	West Street	Southwest	Unknown	Concrete	Good	No	None	N/A	No	2.0 None	None	36 inches to 60 inches	Greater than 80 inches	Less than 0.25 inches	No	1.0 Less than or equal to 2%	6.0	1.0	21	88
4300	41271	8/13/2015 Sandt DOT	Hollis	Broad	Northwest	Unknown	Concrete	Good	No	Granite	Good	No	5.0 None	None	36 inches to 60 inches	Greater than 80 inches	Less than 0.25 inches	No	4.0 Less than or equal to 2%	6.0	1.0	21	88
4303	41274	8/13/2015 Sandt DOT	Wilton	Main Street	West	Unknown	Concrete	Good	No	Granite	Good	No	5.0 Parking Spaces	Moveable Objects	36 inches to 60 inches	Greater than 80 inches	Level	No	0.0 Less than or equal to 2%	1.0	1.0	21	88
4512	41485	9/14/2015 Sandt DOT	Charlestown	Rt 12	East	Unknown	Concrete	Good	No	None	N/A	No	0.0 Grass Strip	None	36 inches to 60 inches	Greater than 80 inches	Less than 0.25 inches	No	3.0 Less than or equal to 2%	3.0	1.0	21	88
5283	0	11/24/2015 Sandt DOT	Sanbornton	Sanbornton Rest Area	North-East	Unknown	Concrete	Good	No	Granite	Good	No	5.0 None	None	36 inches to 60 inches	Greater than 80 inches	Less than 0.25 inches	No	3.0 Less than or equal to 2%	0.0	1.0	21	88
6196	42649	11/30/2015 Sandt DOT	Concord	Rt 13	South	Unknown	Asphalt	Good	No	Granite	Good	No	6.0 Grass Strip	None	36 inches to 60 inches	Greater than 80 inches	0.25 inches to 0.50 inches	No	2.0 Less than or equal to 2%	1.0	1.0	21	88
6217	0	12/1/2015 Wilkinson District 1	Errol	Rte. 26 and 16	North	Unknown	Asphalt	Good	No	Asphalt	Good	No	3.0 None	None	36 inches to 60 inches	Greater than 80 inches	0.25 inches to 0.50 inches	No	1.0 Less than or equal to 2%	2.0	1.0	21	88
6325	0	12/7/2015 Nichols district 1	Groveton	Rte 3	North	Unknown	Concrete	Good	No	Granite	Good	No	6.0 Parking Spaces	None	36 inches to 60 inches	Greater than 80 inches	Less than 0.25 inches	No	1.0 Less than or equal to 2%	0.0	1.0	21	88
6407	0	12/10/2015 Wilkinson District 1	Carroll	Rte. 3	North	Unknown	Asphalt	Good	No	Granite	Good	No	6.0 Bicycle Lane	None	36 inches to 60 inches	Greater than 80 inches	0.25 inches to 0.50 inches	No	2.0 Less than or equal to 2%	13.0	1.0	21	88
6574	0	12/15/2015 Sandt DOT	Tilton	Rt 3	South-East	Unknown	Concrete	Good	No	Granite	Good	No	4.0 None	None	36 inches to 60 inches	Greater than 80 inches	Less than 0.25 inches	No	3.0 Less than or equal to 2%	0.0	1.0	21	88
6696	0	12/23/2015 NM SWRPC	Hinsdale	High St	North-East	Unknown	Concrete	Good	No	Concrete	Good	No	5.5 None	None	36 inches to 60 inches	Greater than 80 inches	Less than 0.25 inches	No	8.0 Less than or equal to 2%	0.0	1.0	21	88
6698	0	12/22/2015 Wilkinson District 1	Warren	Rte.118	West	Unknown	Asphalt	Good	No	Granite	Good	No	4.0 Bicycle Lane	None	36 inches to 60 inches	Greater than 80 inches	0.25 inches to 0.50 inches	No	2.0 Less than or equal to 2%	10.0	1.0	21	88
6700	0	12/22/2015 Wilkinson District 1	Warren	Rte.118	West	Unknown	Asphalt	Good	No	Granite	Good	No	4.0 Bicycle Lane	None	36 inches to 60 inches	Greater than 80 inches	0.25 inches to 0.50 inches	No	2.0 Less than or equal to 2%	3.0	1.0	21	88
6786	0	1/6/2016 Nichols district 1	Woodsville	Rte 135	East	Unknown	Concrete	Good	No	Granite	Good	No	5.0 Bicycle Lane	None	36 inches to 60 inches	Greater than 80 inches	Less than 0.25 inches	No	1.0 Less than or equal to 2%	0.0	1.0	21	88
7854	0	1/14/2016 Nichols district 1	North haverhill	Rte 10	West	Unknown	Asphalt	Good	No	None	N/A	No	0.0 Grass Strip	None	36 inches to 60 inches	Greater than 80 inches	0.25 inches to 0.50 inches	No	1.5 Less than or equal to 2%	0.0	1.0	21	88
7874	0	1/19/2016 Nichols district 1	North haverhill	Rte 116	South	Unknown	Concrete	Good	No	None	N/A	No	0.0 Bicycle Lane	None	36 inches to 60 inches	Greater than 80 inches	Less than 0.25 inches	No	1.0 Less than or equal to 2%	0.0	1.0	21	88
7951	0	1/29/2016 Sandt DOT	Concord	Stickney Ave	East	Unknown	Concrete	Good	No	Granite	Good	No	3.0 Grass Strip	Water	36 inches to 60 inches	Greater than 80 inches	Level	No	6.0 Less than or equal to 2%	0.0	1.0	21	88
8975	0	2/10/2016 Wilkinson District 1	Conway	Rte. 16 and River Street	South	Unknown	Concrete	Good	No	Granite	Good	No	6.0 None	None	36 inches to 60 inches	Greater than 80 inches	Less than 0.25 inches	No	7.0 Less than or equal to 2%	0.0	1.0	21	88
634	2133	7/2/2015 Sandt DOT	Manchester	Hanover Street	South	Unknown	Asphalt	Good	No	Granite	Good	No	6.0 Parking Spaces	None	Greater than 60 inches	Unlimited	Greater than 0.50 inches	No	2.0 Less than or equal to 2%	1.0	1.0	20	88
4723	41696	10/5/2015 Sandt DOT	Rollinsford	Front Street	West	Unknown	Asphalt	Good	No	Granite	Good	No	5.0 Parking Spaces	Utility Pole	Greater than 60 inches	Unlimited	Level	No	1.0 Less than or equal to 2%	0.0	1.0	20	88
4724	41697	10/5/2015 Sandt DOT	Rollinsford	Front Street	West	Unknown	Asphalt	Good	No	Granite	Good	No	5.0 Parking Spaces	Utility Pole	Greater than 60 inches	Unlimited	Level	No	1.0 Less than or equal to 2%	0.0	1.0	20	88
4782	41755	10/12/2015 Sandt DOT	Rye	Ocean Blvd.	Northwest	Unknown	Asphalt	Good	No	None	N/A	No	0.0 None	None	Greater than 60 inches	Unlimited	Greater than 0.50 inches	No	3.0 Less than or equal to 2%	0.0	1.0	20	88
4783	41756	10/12/2015 Sandt DOT	Rye	Ocean Blvd.	Northwest	Unknown	Asphalt	Good	No	None	N/A	No	0.0 None	None	Greater than 60 inches	Unlimited	Greater than 0.50 inches	No	3.0 Less than or equal to 2%	0.0	1.0	20	88
809	3176	7/20/2015 Sandt DOT	Chichester	US 202	South	Unknown	Asphalt	Good	No	None	N/A	No	0.0 Grass Strip	None	36 inches to 60 inches	Unlimited	Level	No	3.0 Greater than 2%	0.0	1.0	20	88
851	3219	7/23/2015 Sandt DOT	Derry	E Broadway		Unknown	Asphalt	Good	No	Granite	Good	No	0.0 Grass Strip	None	36 inches to 60 inches	Unlimited	Level	No	1.0 Greater than 2%	0.0	1.0	20	88
884	3252	7/24/2015 Sandt DOT	Londonderry	Rockingham Road	North	Unknown	Asphalt	Good	No	Granite	Good	No	6.0 None	None	36 inches to 60 inches	Unlimited	Level	No	2.0 Greater than 2%	0.0	1.0	20	88
4178	6547	7/30/2015 Sandt DOT	Milford	Nashua Street	South	Unknown	Asphalt	Good	No	Granite	Good	No	5.0 None	None	36 inches to 60 inches	Unlimited	Level	No	3.6 Greater than 2%	0.0	1.0	20	88
4184	26055	7/30/2015 Sandt DOT	Milford	Nashua Street	South	Unknown	Asphalt	Good	No	Granite	Good	No	5.0 None	None	36 inches to 60 inches	Unlimited	Level	No	2.0 Greater than 2%	0.0	1.0	20	88
4247	41216	8/7/2015 Sandt DOT	Goffstown	N Mast Street	South	Unknown	Asphalt	Good	No	None	N/A	No	0.0 Grass Strip	None	36 inches to 60 inches	Unlimited	Level	No	1.0 Greater than 2%	0.0	1.0	20	88
4287	41258	8/12/2015 Sandt DOT	Merrimack	Milford Road	North	Unknown	Asphalt	Good	No	Granite	Good	No	4.0 None	None	36 inches to 60 inches	Unlimited	Level	No	1.0 Greater than 2%	1.0	1.0	20	88
4335	41307	8/17/2015 Sandt DOT	Antrim	Main Street	West	Unknown	Asphalt	Good	No	Granite	Good	No	4.0 Parking Spaces	None	36 inches to 60 inches	Unlimited	Level	No	8.0 Greater than 2%	0.0	1.0	20	88
4336	41308	8/17/2015 Sandt DOT	Antrim	Main Street	West	Unknown	Asphalt	Good	No	Granite	Good	No	4.0 None	None	36 inches to 60 inches	Unlimited	Level	No	8.0 Greater than 2%	2.0	1.0	20	88
4337	41309	8/17/2015 Sandt DOT	Antrim	Main Street	West	Unknown	Asphalt	Good	No	Granite	Good	No	4.0 Parking Spaces	None	36 inches to 60 inches	Unlimited	Level	No	5.0 Greater than 2%	3.0	1.0	20	88
4343	41315	8/17/2015 Sandt DOT	Bennington	Francestown Road	North	Unknown	Asphalt	Good	No	Granite	Good	No	6.0 Parking Spaces	None	36 inches to 60 inches	Unlimited	Level	No	1.7 Greater than 2%	0.0	1.0	20	88
4359	41331	8/18/2015 Sandt DOT	Greenfield	Forest	South	Unknown	Asphalt	Good	No	Granite	Gone	No	5.0 None	None	36 inches to 60 inches	Unlimited	Level	No	6.0 Greater than 2%	0.0	1.0	20	88
4451	41424	9/1/2015 Sandt DOT	Boscawen	Harris Hill Road	East	Unknown	Asphalt	Good	No	Granite	Good	No	2.0 None	None	36 inches to 60 inches	Unlimited	Level	No	2.0 Greater than 2%	0.0	1.0	20	88
4461	41434	9/2/2015 Sandt DOT	Winchester	Elm St	South	Unknown	Asphalt	Good	No	Asphalt	Good	No	7.0 None	None	36 inches to 60 inches	Unlimited	Level	No	1.0 Greater than 2%	1.0	1.0	20	88
4463	41436	9/2/2015 Sandt DOT	Winchester	Rt 10	East	Unknown	Asphalt	Good	No	Granite	Good	No	4.0 None	None	36 inches to 60 inches	Unlimited	Level	No	0.0 Greater than 2%	0.0	1.0	20	88
4480	41453	9/3/2015 Sandt DOT	Swanzey	Rt 10	East	Unknown	Asphalt	Good	No	None	N/A	No	0.0 Grass Strip	None	36 inches to 60 inches	Unlimited	Level	No	6.0 Greater than 2%	0.0	1.0	20	88
4481	41454	9/3/2015 Sandt DOT	Swanzey	Rt 10	East	Unknown	Asphalt	Good	No	None	N/A	No	0.0 Grass Strip	None	36 inches to 60 inches	Unlimited	Level	No	3.0 Greater than 2%	0.0	1.0	20	88
4482	41455	9/3/2015 Sandt DOT	Swanzey	Rt 10	East	Unknown	Asphalt	Good	No	None	N/A	No	0.0 Grass Strip	None	36 inches to 60 inches	Unlimited	Level	No	1.0 Greater than 2%	0.0	1.0	20	88
4600	41573	9/23/2015 Sandt DOT	Lebanon	Rt 120	Southwest	Unknown	Asphalt	Good	No	None	N/A	No	0.0 Grass Strip	None	36 inches to 60 inches	Unlimited	Level	No	3.0 Greater than 2%	0.0	1.0	20	88
4637	41610	9/25/2015 Sandt DOT	Exeter	Rt 27	Northeast	Unknown	Asphalt	Good	No	Granite	Good	No	5.0 None	None	36 inches to 60 inches	Unlimited	Level	No	2.0 Greater than 2%	0.0	1.0	20	88
4643	41616	9/25/2015 Sandt DOT	Exeter	Rt 27	North	Unknown	Asphalt	Good	No	Granite	Good	No	6.0 None	None	36 inches to 60 inches	Unlimited	Level	No	4.0 Greater than 2%	0.0	1.0	20	88
4679	41652	10/1/2015 Sandt DOT	Rochester	N Main	Southwest	Unknown	Asphalt	Good	No	Granite	Good	No	5.0 Grass Strip	None	36 inches to 60 inches	Unlimited	Level	No	2.0 Greater than 2%	0.0	1.0	20	88
4696	41669	10/1/2015 Sandt DOT	Rochester	N Main	Southwest	Unknown	Asphalt	Good	No	Granite	Good	No	5.0 None	None	36 inches to 60 inches	Unlimited	Level	No	2.0 Greater than 2%	0.0	1.0	20	88
4697	41670	10/1/2015 Sandt DOT	Rochester	N Main	Southwest	Unknown	Asphalt	Good	No	Granite	Good	No	6.0 None	None	36 inches to 60 inches	Unlimited	Level	No	2.0 Greater than 2%	0.0	1.0	20	88
4708	41681	10/5/2015 Sandt DOT	Rochester	Gonic Road	West	Unknown	Asphalt	Good	No	Granite	Good	No	8.0 None	None	36 inches to 60 inches	Unlimited	Level	No	1.0 Greater than 2%	2.0	1.0	20	88
4712	41685	10/5/2015 Sandt DOT	Rochester	202	Southeast	Unknown	Asphalt	Good	No	Granite	Good	No	6.0 None	None	36 inches to 60 inches	Unlimited	Level	No	1.0 Greater than 2%	0.0	1.0	20	88
4713	41686	10/5/2015 Sandt DOT	Rochester	202	Southeast	Unknown	Asphalt	Good	No	Granite	Good	No	6.0 None	None	36 inches to 60 inches	Unlimited	Level	No	4.0 Greater than 2%	0.0	1.0	20	88
4714	41687	10/5/2015 Sandt DOT	Rochester	202	Southeast	Unknown	Asphalt	Good	No	Granite	Good	No	6.0 None	None	36 inches to 60 inches	Unlimited	Level	No	8.0 Greater than 2%	0.0	1.0	20	88
4730	41703	10/5/2015 Sandt DOT	Rollinsford	Main Street	South	Unknown	Asphalt	Good	No	Granite	Good	No	4.0 None	None	36 inches to 60 inches	Unlimited	Level	No	2.0 Greater than 2%	1.0	1.0	20	88
4731	41704	10/5/2015 Sandt DOT	Rollinsford	Main Street	South	Unknown	Asphalt	Good	No	Granite	Good	No	4.0 None	None	36 inches to 60 inches	Unlimited	Level	No	2.0 Greater than 2%	1.0	1.0	20	88
4732	41705	10/5/2015 Sandt DOT	Rollinsford	Main Street	South	Unknown	Asphalt	Good	No	Granite	Good	No	4.0 None	None	36 inches to 60 inches	Unlimited	Level	No	2.0 Greater than 2%	1.0	1.0	20	88
4742	41715	10/6/2015 Sandt DOT	Dover	Hartswood Road	East	Unknown	Asphalt	Good	No	Granite	Good	No	5.0 Grass Strip	None	36 inches to 60 inches	Unlimited	Level	No	5.0 Greater than 2%	2.0	1.0	20	88
4744	41717	10/6/2015 Sandt DOT	Dover	Knox Marsh Road	Southeast	Unknown	Asphalt	Good	No	Granite	Good	No	6.0 None	None	36 inches to 60 inches	Unlimited	Level	No	1.0 Greater than 2%	1.0	1.0	20	88
4746	41719	10/6/2015 Sandt DOT	Dover	Knox Marsh Road	Southeast	Unknown	Asphalt	Good	No	Granite	Good	No	6.0 None	None	36 inches to 60 inches	Unlimited	Level	No	2.0 Greater than 2%	1.0	1.0	20	88
4747	41720	10/6/2015 Sandt DOT	Dover	Knox Marsh Road	Southeast	Unknown	Asphalt	Good	No	Granite	Good	No	6.0 None	None	36 inches to 60 inches	Unlimited	Level	No	2.0 Greater than 2%	0.0	1.0	20	88
4802	41775	10/14/2015 Sandt DOT	Portsmouth	Rt 1	West	Unknown	Asphalt	Good	No	Granite	Good	No	6.0 None	None	36 inches to 60 inches	Unlimited	Level	No	4.0 Greater than 2%	3.0	1.0	20	88
4844	42657	10/20/2015 Sandt DOT	Exeter	Portsmouth Ave	Southeast	Unknown	Asphalt	Good	No	Granite	Good	No	5.0 None	None	36 inches to 60 inches	Unlimited	Level	No	5.0 Greater than 2%	8.0	1.0	20	88
4845	42658	10/20/2015 Sandt DOT	Exeter	Portsmouth Ave	Southeast	Unknown	Asphalt	Good	No	Granite	Good	No	5.0 None	None	36 inches to 60 inches	Unlimited	Level	No	3.0 Greater than 2%	2.0	1.0	20	88
4912	42725	10/28/2015 Sandt DOT	Hampton	Ocean Blvd	West	Unknown	Asphalt	Good	No	Granite	Good	No	3.0 None	None	36 inches to 60 inches	Unlimited	Level	No	1.0 Greater than 2%	0.0	1.0	20	88
5174	0	11/6/2015 Sandt DOT	Seabrook	Rt 1	East	Unknown	Asphalt	Good	No	Granite	Good	No	5.0 None	None	36 inches to 60 inches	Unlimited	Level	No	3.0 Greater than 2%	2.0	1.0	20	88
5175	0	11/6/2015 Sandt DOT	Seabrook	Rt 1	West	Unknown	Asphalt	Good	No	Granite	Good	No	5.0 None	None	36 inches to 60 inches	Unlimited	Level	No	3.0 Greater than 2%	4.0	1.0	20	88
5176	0	11/6/2015 Sandt DOT	Seabrook	Rt 1	West	Unknown	Asphalt	Good	No	Granite	Good	No	5.0 None	None	36 inches to 60 inches	Unlimited	Level	No	1.0 Greater than 2%	1.0	1.0	20	88
5177	0	11/6/2015 Sandt DOT	Seabrook	Rt 1	West	Unknown	Asphalt	Good	No	Granite	Good	No	6.0 None	None	36 inches to 60 inches	Unlimited	Level	No	3.0 Greater than 2%	4.0	1.0	20	88
5178	0	11/6/2015 Sandt DOT	Seabrook	Rt 1	West	Unknown	Asphalt	Good	No	Granite	Good	No	6.0 None	None	36 inches to 60 inches	Unlimited	Level	No	3.0 Greater than 2%	1.0	1.0	20	88
6228	0	11/10/2015 Sandt DOT	Hampton	Rt 1	East	Unknown	Asphalt	Good	No	Granite	Fair	No	1.0 None	None	36 inches to 60 inches	Unlimited	Level	No	4.0 Greater than 2%	0.0	1.0	20	88
6229	0	11/10/2015 Sandt DOT	Hampton	Rt 1	West	Unknown	Asphalt	Good	No	Granite	Fair	No	1.0 None	None	36 inches to 60 inches	Unlimited	Level	No	4.0 Greater than 2%	0.0	1.0	20	88
6336	0	12/7/2015 Nichols district 1	Northumberland	Guildhall rd	North	Unknown	Asphalt	Good	No	Granite	Good	No	6.0 None	None	36 inches to 60 inches	Unlimited	Level	No	3.0 Greater than 2%	0.0	1.0	20	88
6409	0	12/9/2015 Wilkinson District 1	Carroll	Rte. 3	South-West	Unknown	Asphalt	Good	No	None	N/A	No	0.0 Grass Strip	None	36 inches to 60 inches	Unlimited	Level	No	3.0 Greater than 2%	0.0	1.0	20	88
6410	0	12/9/2015 Wilkinson District 1	Carroll	Rte. 3	South-West	Unknown	Asphalt	Good	No	None	N/A	No	0.0 Grass Strip	None	36 inches to 60 inches	Unlimited	Level	No	4.0 Greater than 2%	0.0	1.0	20	88
6680	0	12/22/2015 NM SWRPC	Troy	Rt 12	West	Unknown	Asphalt	Good	No	Granite	Good	No	4.0 None	None	36 inches to 60 inches	Unlimited	Level	No	5.2 Greater than 2%	5.0	1.0	20	88
6766	0	1/4/2016 Sandt DOT	Belmont	Daniel Webster Hwy	North-West	Unknown	Asphalt	Good	No	Granite	Good	No	5.0 Grass Strip	None	36 inches to 60 inches	Unlimited	Level	No	6.0 Greater than 2%	0.0	1.0	20	88
6767	0	1/4/2016 Sandt DOT	Belmont	Daniel Webster Hwy	North-West	Unknown	Asphalt	Good	No	Granite	Good	No	5.0 Grass Strip	None	36 inches to 60 inches	Unlimited	Level	No	8.0 Greater than 2%	0.0	1.0	20	88
6837	0	1/11/2016 Sandt DOT	Laconia	Rt 3	East	Unknown	Asphalt	Good	No	Granite	Good	No	5.0 None	None	36 inches to 60 inches	Unlimited	Level	No	1.0 Greater than 2%	0.0	1.0	20	88
6838	0	1/11/2016 Sandt DOT	Laconia	Rt 3	West	Unknown	Asphalt	Good	No	Granite	Good	No	5.0 None	None	36 inches to 60 inches	Unlimited	Level	No	3.0 Greater than 2%	0.0	1.0	20	88
6839	0	1/11/2016 Sandt DOT	Laconia	Rt 3	West	Unknown	Asphalt	Good	No	Granite	Good	No	5.0 None	None	36 inches to 60 inches	Unlimited	Level	No	4.0 Greater than 2%	0.0	1.0	20	88
9011	0	11/6/2015 Sandt DOT	Seabrook	Rt 1	West	Unknown	Asphalt	Good	No	Granite	Good	No	6.0 None	None	36 inches to 60 inches	Unlimited	Level	No	3.0 Greater than 2%	4.0	1.0	20	88
9024	0	3/7/2016 Sandt DOT	Swanzey	Rt 12	West	Unknown	Asphalt	Good	No	Granite	Good	No	5.0 Grass Strip	None	36 inches to 60 inches	Unlimited	Level	No	1.0 Greater than 2%	2.0	1.0	20	88
9069	0	3/15/2016 Sandt DOT	Salem	Salem Park n Ride	North-East	Unknown	Asphalt	Good	No	Granite	Good	No	5.00000000000 None	None	36 inches to 60 inches	Unlimited	Level	No	2.0 Greater than 2%	0.0	1.0	20	88
9070	0	3/15/2016 Sandt DOT	Salem	Salem Park n Ride	West	Unknown	Asphalt	Good	No	Granite	Good	No	6.00000000000 None	None	36 inches to 60 inches	Unlimited	Level	No	1.0 Greater than 2%	0.0	1.0	20	88
9077	0	3/16/2016 Sandt DOT	Plaistow	Rt 125	West	Unknown	Asphalt	Good	No	Granite	Good	No	5.00000000000 None	None	36 inches to 60 inches	Unlimited	Level	No	1.0 Greater than 2%	1.0	1.0	20	88
9078	0	3/16/2016 Sandt DOT	Plaistow	Rt 125	West	Unknown	Asphalt	Good	No	Granite	Good	No	5.00000000000 None	None	36 inches to 60 inches	Unlimited	Level	No	1.0 Greater than 2%	2.0	1.0	20	88
9105	0	3/18/2016 Sandt DOT	Plaistow	Rt 125	East	Unknown	Asphalt	Good	No	Granite	Good	No	5.00000000000 None	None	36 inches to 60 inches	Unlimited	Level	No	3.0 Greater than 2%	4.0	1.0	20	88
9107	0	3/18/2016 Sandt DOT	Plaistow	Rt 125	West	Unknown	Asphalt	Good	No	Granite	Good	No	4.00000000000 Grass Strip	None	36 inches to 60 inches	Unlimited	Level	No	4.0 Greater than 2%	1.0	1.0	20	88
803	3170	7/20/2015 Sandt DOT	Chichester	US 202	South	Unknown	Asphalt	Good	No	Granite	Good	No	6.0 None	None	Greater than 60 inches	Unlimited	0.25 inches to 0.50 inches	No	0.0 Greater than 2%	1.0	1.0	18	89
806	3173	7/20/2015 Sandt DOT	Chichester	US 202	North	Unknown	Asphalt	Good	No	Granite	Good	No	6.0 None	None	Greater than 60 inches	Unlimited	0.25 inches to 0.50 inches	No	0.0 Greater than 2%	1.0	1.0	18	89
502	1066	6/17/2015 Sandt DOT	Allenstown	Main	West	Unknown	Asphalt	Good	No	Granite	Good	No	7.5 None	None	36 inches to 60 inches	Unlimited	0.25 inches to 0.50 inches	No	2.0 Less than or equal to 2%	0.0	1.0	18	89
787	2286	7/17/2015 Sandt DOT	Pittsfield	Barnstead Road	Northwest	Unknown	Concrete	Good	No	Granite	Good	No	7.0 None	None	36 inches to 60 inches	Unlimited	0.50 inches to 1.00 inches	No	0.0 Less than or equal to 2%	0.0	1.0	18	89
4352	41324	8/18/2015 Sandt DOT	Bennington	Cross Street	West	Unknown	Concrete	Good	No	Granite	Good	No	5.0 Parking Spaces	None	36 inches to 60 inches	Unlimited	Less than 0.25 inches	No	4.0 Less than or equal to 2%	3.0	1.0	18	89
4508	41481	9/14/2015 Sandt DOT	Charlestown	Rt 12	East	Unknown	Concrete	Good	No	Granite	Good	No	5.0 Parking Spaces	None	36 inches to 60 inches	Unlimited	Less than 0.25 inches	No	0.0 Less than or equal to 2%	0.0	1.0	18	89
4509	41482	9/14/2015 Sandt DOT	Charlestown	Rt 12	East	Unknown	Concrete	Good	No	None	N/A	No	0.0 Parking Spaces	None	36 inches to 60 inches	Unlimited	Less than 0.25 inches	No	3.0 Less than or equal to 2%	0.0	1.0	18	89
4800	41773	10/14/2015 Sandt DOT	Portsmouth	Ocean Road	West	Unknown	Concrete	Good	No	Granite	Good	No	6.0 Grass Strip	None	36 inches to 60 inches	Unlimited	Less than 0.25 inches	No	8.0 Less than or equal to 2%	10.0	1.0	18	89
4857	42670	10/21/2015 Wilkinson dist.1	Pittsburg	Rte 3	North	Unknown	Asphalt	Good	No	None	Good	No	0.0 None	None	36 inches to 60 inches	Unlimited	0.25 inches to 0.50 inches	No	0.0 Less than or equal to 2%	0.0	1.0	18	89
6519	0	12/14/2015 Patch district 1	Littleton	Rte 302	North	Unknown	Asphalt	Good	No	Granite	Good	No	4.0 None	None	36 inches to 60 inches	Unlimited	0.25 inches to 0.50 inches	No	2.0 Less than or equal to 2%	0.0	1.0	18	89
417	862	4/30/2015 Srpc tom	Newmarket	108	West	Unknown	Concrete	Good	No	Granite	Good	No	8.0 Parking Spaces	None	Greater than 60 inches	Greater than 80 inches	Level	No	1.0 Greater than 2%	1.0	1.0	17	90
4766	41739	10/8/2015 Sandt DOT	Durham	Main Street	North	Unknown	Concrete	Good	No	Granite	Good	No	6.0 Bicycle Lane	None	Greater than 60 inches	Greater than 80 inches	Level	No	7.0 Greater than 2%	3.0	1.0	17	90
5004	42899	10/27/2015 Nichols district 1	Colebrook	Rte 3	East	Unknown	Concrete	Fair	No	Granite	Good	No	8.0 None	None	Greater than 60 inches	Greater than 80 inches	Level	No	1.7 Less than or equal to 2%	0.0	1.0	17	90
6225	0	12/1/2015 Sandt DOT	Concord	Rt 3	North	Unknown	Concrete	Good	No	None	N/A	No	0.0 Grass Strip	None	Greater than 60 inches	Greater than 80 inches	Level	No	7.0 Greater than 2%	0.0	1.0	17	90
6607	0	12/16/2015 Sandt DOT	Tilton	Rt 3	South	Unknown	Concrete	Good	No	Granite	Good	No	3.0 None	None	Greater than 60 inches	Greater than 80 inches	Level	No	1.0 Greater than 2%	0.0	1.0	17	90
504	1068	6/22/2015 Sandt DOT	Allenstown	Main	West	Unknown	Concrete	Good	No	Granite	Good	No	6.0 None	None	36 inches to 60 inches	Greater than 80 inches	Level	No	0.8 Less than or equal to 2%	2.0	1.0	17	90
528	1093	6/23/2015 MC SWRPC	North Walpole	Main Street	East	Unknown	Concrete	Good	No	None	N/A	No	1.5 None	None	36 inches to 60 inches	Greater than 80 inches	Level	No	1.0 Less than or equal to 2%	3.0	1.0	17	90
584	2083	6/26/2015 MC SWRPC	North Walpole	Spruce Street	East	Unknown	Concrete	Good	No	None	N/A	No	1.7 None	None	36 inches to 60 inches	Greater than 80 inches	Level	No	1.0 Less than or equal to 2%	1.0	1.0	17	90
585	2084	6/26/2015 MC SWRPC	North Walpole	Pine Street	North	Unknown	Concrete	Good	No	None	N/A	No	1.3 None	None	36 inches to 60 inches	Greater than 80 inches	Level	No	4.0 Less than or equal to 2%	5.0	1.0	17	90
586	2085	6/26/2015 MC SWRPC	North Walpole	Pine Street	South	Unknown	Concrete	Good	No	None	N/A	No	1.5 None	None	36 inches to 60 inches	Greater than 80 inches	Level	No	4.0 Less than or equal to 2%	3.0	1.0	17	90
595	2094	6/26/2015 MC SWRPC	North Walpole	Main Street	East	Unknown	Concrete	Good	No	None	N/A	No	2.0 None	None	36 inches to 60 inches	Greater than 80 inches

6221	0	12/1/2015	Sandt DOT	Concord	Rt 3	South	Unknown	Concrete	Good	No	Granite	Good	No	6.0	Other	None	36 inches to 60 inches	Greater than 80 inches	Level	No	1.0	Less than or equal to 2%	2.0	1.0	17	90
6222	0	12/1/2015	Sandt DOT	Concord	Rt 3	North	Unknown	Concrete	Good	No	Granite	Good	No	6.0	Grass Strip	None	36 inches to 60 inches	Greater than 80 inches	Level	No	2.0	Less than or equal to 2%	0.0	1.0	17	90
6223	0	12/1/2015	Sandt DOT	Concord	Rt 3	North	Unknown	Concrete	Good	No	Granite	Good	No	6.0	Grass Strip	None	36 inches to 60 inches	Greater than 80 inches	Level	No	2.0	Less than or equal to 2%	0.0	1.0	17	90
6224	0	12/1/2015	Sandt DOT	Concord	Rt 3	North	Unknown	Concrete	Good	No	Granite	Good	No	6.0	Grass Strip	None	36 inches to 60 inches	Greater than 80 inches	Level	No	2.0	Less than or equal to 2%	0.0	1.0	17	90
6292	0	12/4/2015	Sandt DOT	Ashland	Rt 132	North-West	Unknown	Concrete	Good	No	None	N/A	No	0.0	None	None	36 inches to 60 inches	Greater than 80 inches	Level	No	1.0	Less than or equal to 2%	0.0	1.0	17	90
6335	0	12/7/2015	Nichols district 1	Northumberland	Guildhall rd	North	Unknown	Concrete	Good	No	None	N/A	No	0.0	None	None	36 inches to 60 inches	Greater than 80 inches	Level	No	1.0	Less than or equal to 2%	0.0	1.0	17	90
6345	0	12/7/2015	Sandt DOT	Bristol	N Main	North-East	Unknown	Concrete	Good	No	Granite	Good	No	5.0	Parking Spaces	None	36 inches to 60 inches	Greater than 80 inches	Level	No	4.0	Less than or equal to 2%	0.0	1.0	17	90
6346	0	12/7/2015	Sandt DOT	Bristol	Rt 104	North	Unknown	Concrete	Good	No	Granite	Good	No	5.0	None	None	36 inches to 60 inches	Greater than 80 inches	Level	No	8.0	Less than or equal to 2%	0.0	1.0	17	90
6350	0	12/7/2015	Sandt DOT	Bristol	Rt 104	South-East	Unknown	Concrete	Good	No	Granite	Good	No	5.0	None	None	36 inches to 60 inches	Greater than 80 inches	Level	No	8.0	Less than or equal to 2%	0.0	1.0	17	90
6351	0	12/7/2015	Sandt DOT	Bristol	S Main	South-East	Unknown	Concrete	Good	No	Granite	Good	No	5.0	None	None	36 inches to 60 inches	Greater than 80 inches	Level	No	2.0	Less than or equal to 2%	0.0	1.0	17	90
6432	0	12/10/2015	Nichols district 1	Gilman	Bridge hill road	East	Unknown	Asphalt	Good	No	Asphalt	Good	No	4.0	Bicycle Lane	None	36 inches to 60 inches	Greater than 80 inches	Level	No	1.5	Less than or equal to 2%	0.0	1.0	17	90
6433	0	12/10/2015	Nichols district 1	Gilman	Bridge hill road	East	Unknown	Concrete	Good	No	Granite	Good	No	6.0	Bicycle Lane	None	36 inches to 60 inches	Greater than 80 inches	Level	No	0.5	Less than or equal to 2%	0.0	1.0	17	90
6491	0	12/14/2015	Sandt DOT	Bristol	S Main	South-East	Unknown	Concrete	Good	No	Granite	Good	No	5.0	None	None	36 inches to 60 inches	Greater than 80 inches	Level	No	2.0	Less than or equal to 2%	0.0	1.0	17	90
6516	0	12/14/2015	Patch district 1	Littleton	Rte 302	North	Unknown	Asphalt	Good	No	Asphalt	Good	No	9.0	Bicycle Lane	None	36 inches to 60 inches	Less than 0.25 inches	No	No	5.0	Less than or equal to 2%	0.0	1.0	17	90
6554	0	12/15/2015	Nichols district 1	Littleton	Rte 135	North-East	Unknown	Concrete	Good	No	Granite	Good	No	7.0	Bicycle Lane	None	36 inches to 60 inches	Greater than 80 inches	Level	No	1.0	Less than or equal to 2%	0.0	1.0	17	90
6575	0	12/15/2015	Sandt DOT	Tilton	Rt 3	South-East	Unknown	Asphalt	Good	No	Asphalt	Good	No	4.0	None	None	36 inches to 60 inches	Greater than 80 inches	Less than 0.25 inches	No	3.0	Less than or equal to 2%	0.0	1.0	17	90
6613	0	12/16/2015	Sandt DOT	Tilton	Rt 3	South	Unknown	Concrete	Good	No	Granite	Good	No	6.0	Grass Strip	None	36 inches to 60 inches	Greater than 80 inches	Level	No	7.0	Less than or equal to 2%	0.0	1.0	17	90
6628	0	12/17/2015	Wilkinson District 1	Warren	Rte.118	East	Unknown	Concrete	Good	No	Granite	Good	No	4.0	Parking Spaces	None	36 inches to 60 inches	Greater than 80 inches	Level	No	1.0	Less than or equal to 2%	0.0	1.0	17	90
6686	0	12/22/2015	NM SWRPC	Troy	Granite st	North	Unknown	Concrete	Good	No	None	N/A	No	0.0	None	None	36 inches to 60 inches	Greater than 80 inches	Level	No	8.0	Less than or equal to 2%	2.0	1.0	17	90
6687	0	12/22/2015	NM SWRPC	Troy	Granite st	North	Unknown	Concrete	Good	No	None	N/A	No	0.0	None	None	36 inches to 60 inches	Greater than 80 inches	Level	No	3.0	Less than or equal to 2%	3.0	1.0	17	90
6710	0	12/23/2015	NM SWRPC	Hinsdale	Depot st	North-East	Unknown	Concrete	Good	No	Granite	Good	No	8.5	None	None	36 inches to 60 inches	Greater than 80 inches	Level	No	7.0	Less than or equal to 2%	0.0	1.0	17	90
6711	0	12/23/2015	NM SWRPC	Hinsdale	River rd	North-West	Unknown	Concrete	Good	No	None	N/A	No	1.5	None	None	36 inches to 60 inches	Greater than 80 inches	Level	No	7.0	Less than or equal to 2%	8.0	1.0	17	90
6787	0	1/6/2016	Nichols district 1	Bath	Rte 135	East	Unknown	Asphalt	Good	No	Asphalt	Good	No	5.0	Bicycle Lane	None	36 inches to 60 inches	Greater than 80 inches	Less than 0.25 inches	No	1.0	Less than or equal to 2%	0.0	1.0	17	90
7857	0	1/14/2016	Wilkinson District 1	Lincoln	Rte 112	North-West	Unknown	Concrete	Good	No	Granite	Good	No	4.0	None	None	36 inches to 60 inches	Greater than 80 inches	Level	No	2.0	Less than or equal to 2%	2.0	1.0	17	90
7862	0	1/14/2016	Wilkinson District 1	Lincoln	Rte 112	North-West	Unknown	Concrete	Good	No	Granite	Good	No	4.0	None	None	36 inches to 60 inches	Greater than 80 inches	Level	No	1.0	Less than or equal to 2%	2.0	1.0	17	90
7870	0	1/15/2016	Sandt DOT	Durham	Rt 108	East	Unknown	Asphalt	Good	No	None	N/A	No	0.0	None	None	36 inches to 60 inches	Greater than 80 inches	Less than 0.25 inches	No	4.0	Less than or equal to 2%	0.0	1.0	17	90
7875	0	1/19/2016	Nichols district 1	North haverhill	Rte 116	South	Unknown	Asphalt	Good	No	Asphalt	Good	No	6.0	Bicycle Lane	None	36 inches to 60 inches	Greater than 80 inches	Less than 0.25 inches	No	3.0	Less than or equal to 2%	18.0	1.0	17	90
7876	0	1/25/2016	Wilkinson District 1	Conway	Rte. 302	South	Unknown	Concrete	Good	No	Granite	Good	No	6.0	Bicycle Lane	None	36 inches to 60 inches	Greater than 80 inches	Level	No	0.0	Less than or equal to 2%	2.0	1.0	17	90
7877	0	1/25/2016	Wilkinson District 1	Conway	Rte. 302	South	Unknown	Concrete	Good	No	Granite	Good	No	6.0	Bicycle Lane	None	36 inches to 60 inches	Greater than 80 inches	Level	No	0.0	Less than or equal to 2%	2.0	1.0	17	90
7879	0	1/25/2016	Nichols district 1	Jackson	Rte 16A	East	Unknown	Asphalt	Good	No	Granite	Good	No	0.0	None	None	36 inches to 60 inches	Greater than 80 inches	Less than 0.25 inches	No	2.0	Less than or equal to 2%	0.0	1.0	17	90
7880	0	1/25/2016	Nichols district 1	Jackson	Rte 16A	East	Unknown	Asphalt	Good	No	Granite	Good	No	2.0	None	None	36 inches to 60 inches	Greater than 80 inches	Less than 0.25 inches	No	2.0	Less than or equal to 2%	0.0	1.0	17	90
7889	0	1/25/2016	Nichols district 1	Jackson	Rte 16 A	West	Unknown	Asphalt	Good	No	Granite	Good	No	4.0	Parking Spaces	None	36 inches to 60 inches	Greater than 80 inches	Less than 0.25 inches	No	1.5	Less than or equal to 2%	0.0	1.0	17	90
7890	0	1/25/2016	Nichols district 1	Jackson	Rte 16 A	West	Unknown	Asphalt	Good	No	Granite	Fair	No	2.0	None	None	36 inches to 60 inches	Greater than 80 inches	Less than 0.25 inches	No	5.0	Less than or equal to 2%	2.0	1.0	17	90
7950	0	1/29/2016	Sandt DOT	Concord	Stickney Ave	East	Unknown	Concrete	Good	No	Granite	Good	No	5.0	None	None	36 inches to 60 inches	Greater than 80 inches	Level	No	2.0	Less than or equal to 2%	0.0	1.0	17	90
7952	0	1/29/2016	Sandt DOT	Concord	Stickney Ave	East	Unknown	Concrete	Good	No	Granite	Good	No	4.0	None	None	36 inches to 60 inches	Greater than 80 inches	Level	No	1.0	Less than or equal to 2%	0.0	1.0	17	90
7953	0	1/29/2016	Sandt DOT	Concord	Stickney Ave	East	Unknown	Concrete	Good	No	Granite	Good	No	4.0	None	None	36 inches to 60 inches	Greater than 80 inches	Level	No	1.0	Less than or equal to 2%	1.0	1.0	17	90
8984	0	2/11/2016	Wilkinson District 1	Conway	Rest Area - Intervale Vista - Rtes. 16 & 302	West	Unknown	Concrete	Good	No	Granite	Good	No	6.0	Parking Spaces	None	36 inches to 60 inches	Greater than 80 inches	Level	No	1.0	Less than or equal to 2%	2.0	1.0	17	90
8986	0	2/11/2016	Wilkinson District 1	Conway	Rest Area - Intervale Vista - Rtes. 16 & 302	West	Unknown	Concrete	Good	No	Granite	Good	No	6.0	Parking Spaces	None	36 inches to 60 inches	Greater than 80 inches	Level	No	1.0	Less than or equal to 2%	1.0	1.0	17	90
8993	0	2/22/2016	Sandt DOT	Meredith	Rt 3	South-West	Unknown	Concrete	Good	No	Granite	Good	No	5.0	Grass Strip	None	36 inches to 60 inches	Greater than 80 inches	Level	No	1.0	Less than or equal to 2%	2.0	1.0	17	90
8995	0	2/22/2016	Sandt DOT	Meredith	Rt 3	North-East	Unknown	Concrete	Good	No	Granite	Good	No	5.0	Grass Strip	None	36 inches to 60 inches	Greater than 80 inches	Level	No	4.0	Less than or equal to 2%	2.0	1.0	17	90
8996	0	2/22/2016	Sandt DOT	Meredith	Rt 3	North-East	Unknown	Concrete	Good	No	Granite	Good	No	5.0	Grass Strip	None	36 inches to 60 inches	Greater than 80 inches	Level	No	7.0	Less than or equal to 2%	2.0	1.0	17	90
4735	41708	10/6/2015	Sandt DOT	Dover	Littleworth Road	Northeast	Unknown	Asphalt	Good	No	Granite	Good	No	6.0	None	Vegetation	Greater than 60 inches	Unlimited	Level	No	3.0	Less than or equal to 2%	0.0	1.0	36	91
6690	0	12/22/2015	NM SWRPC	Troy	South st	West	Unknown	Concrete	Good	No	Granite	Good	No	0.0	None	None	Greater than 60 inches	Less than 80in	Level	No	8.0	Less than or equal to 2%	13.0	1.0	36	91
4753	41726	10/7/2015	Sandt DOT	Dover	US4	South	Unknown	Concrete	Good	No	None	N/A	No	0.0	Other	None	Greater than 60 inches	Unlimited	Level	No	1.0	Greater than 2%	0.0	1.0	14	92
4754	41727	10/7/2015	Sandt DOT	Dover	US4	South	Unknown	Concrete	Good	No	None	N/A	No	0.0	Other	None	Greater than 60 inches	Unlimited	Level	No	1.0	Greater than 2%	0.0	1.0	14	92
4942	42756	10/27/2015	Sandt DOT	Hampton	Ocean Blvd	East	Unknown	Asphalt	Good	No	Granite	Good	No	6.0	Parking Spaces	None	Greater than 60 inches	Unlimited	Less than 0.25 inches	No	2.0	Greater than 2%	4.0	1.0	14	92
5050	42945	10/29/2015	Sandt DOT	Hampton	Ocean Blvd	W	Unknown	Concrete	Good	No	Granite	Good	No	8.0	Parking Spaces	None	Greater than 60 inches	Unlimited	Level	No	1.0	Greater than 2%	1.0	1.0	14	92
467	1031	6/11/2015	Sandt DOT	Concord	Noble Drive	North	NH_DOT	Concrete	Good	No	Granite	Good	No	5.0	None	None	36 inches to 60 inches	Unlimited	Level	No	0.0	Less than or equal to 2%	0.0	1.0	14	92
505	1069	6/22/2015	Sandt DOT	Allens	Main	West	Unknown	Concrete	Good	No	Granite	Good	No	6.0	None	None	36 inches to 60 inches	Unlimited	Level	No	0.0	Less than or equal to 2%	0.0	1.0	14	92
571	2070	6/26/2015	MC SWRPC	North Walpole	West Street	South	Unknown	Concrete	Good	No	Granite	Good	No	1.5	None	None	36 inches to 60 inches	Unlimited	Level	No	0.0	Less than or equal to 2%	1.0	1.0	14	92
573	2072	6/26/2015	MC SWRPC	North Walpole	Church Street	West	Unknown	Concrete	Good	No	Granite	Good	No	2.0	None	None	36 inches to 60 inches	Unlimited	Level	No	1.0	Less than or equal to 2%	1.0	1.0	14	92
582	2081	6/26/2015	MC SWRPC	North Walpole	Spruce Street	South	Unknown	Concrete	Good	No	None	N/A	No	2.0	None	None	36 inches to 60 inches	Unlimited	Level	No	4.0	Less than or equal to 2%	0.0	1.0	14	92
626	2125	6/30/2015	NM SWRPC	North Walpole	Kilven st	North	Unknown	Concrete	Good	No	Granite	Good	No	6.5	None	None	36 inches to 60 inches	Unlimited	Level	No	1.0	Less than or equal to 2%	2.0	1.0	14	92
660	2159	7/7/2015	Sandt DOT	Concord	Foundry Street	East	Unknown	Concrete	Good	No	Concrete	Good	No	5.0	None	None	36 inches to 60 inches	Unlimited	Level	No	0.0	Less than or equal to 2%	0.0	1.0	14	92
668	2167	7/7/2015	Sandt DOT	Concord	Foundry Street	East	Unknown	Concrete	Good	No	Concrete	Good	No	6.0	None	None	36 inches to 60 inches	Unlimited	Level	No	0.0	Less than or equal to 2%	7.0	1.0	14	92
718	2217	7/13/2015	Sandt DOT	Nashua	East Dunstable Road	Northwest	Unknown	Asphalt	Good	No	Granite	Good	No	6.0	Bicycle Lane	None	36 inches to 60 inches	Unlimited	Less than 0.25 inches	No	2.0	Less than or equal to 2%	0.0	1.0	14	92
719	2218	7/13/2015	Sandt DOT	Nashua	East Dunstable Road	West	Unknown	Asphalt	Good	No	Granite	Good	No	6.0	Bicycle Lane	None	36 inches to 60 inches	Unlimited	Less than 0.25 inches	No	3.0	Less than or equal to 2%	0.0	1.0	14	92
721	2220	7/13/2015	Sandt DOT	Nashua	East Dunstable Road	West	Unknown	Asphalt	Good	No	Granite	Good	No	6.0	Bicycle Lane	None	36 inches to 60 inches	Unlimited	Less than 0.25 inches	No	3.0	Less than or equal to 2%	0.0	1.0	14	92
726	2225	7/13/2015	Sandt DOT	Nashua	East Dunstable Road	East	Unknown	Asphalt	Good	No	Granite	Good	No	6.0	None	None	36 inches to 60 inches	Unlimited	Less than 0.25 inches	No	3.0	Less than or equal to 2%	0.0	1.0	14	92
728	2227	7/13/2015	Sandt DOT	Nashua	East Dunstable Road	East	Unknown	Asphalt	Good	No	Granite	Good	No	6.0	None	None	36 inches to 60 inches	Unlimited	Less than 0.25 inches	No	3.0	Less than or equal to 2%	0.0	1.0	14	92
730	2229	7/13/2015	Sandt DOT	Nashua	East Dunstable Road	Southeast	Unknown	Asphalt	Good	No	Granite	Good	No	6.0	None	None	36 inches to 60 inches	Unlimited	Less than 0.25 inches	No	3.0	Less than or equal to 2%	0.0	1.0	14	92
731	2230	7/13/2015	Sandt DOT	Nashua	East Dunstable Road	Southeast	Unknown	Asphalt	Good	No	Granite	Good	No	6.0	Bicycle Lane	None	36 inches to 60 inches	Unlimited	Less than 0.25 inches	No	0.0	Less than or equal to 2%	3.0	1.0	14	92
4179	16331	7/30/2015	Sandt DOT	Milford	Nashua Street	South	Unknown	Concrete	Good	No	Granite	Good	No	5.0	None	None	36 inches to 60 inches	Unlimited	Level	No	2.0	Less than or equal to 2%	0.0	1.0	14	92
4180	19614	7/30/2015	Sandt DOT	Milford	Nashua Street	South	Unknown	Concrete	Good	No	Granite	Good	No	5.0	None	None	36 inches to 60 inches	Unlimited	Level	No	2.0	Less than or equal to 2%	0.0	1.0	14	92
4181	22897	7/30/2015	Sandt DOT	Milford	Nashua Street	South	Unknown	Concrete	Good	No	Granite	Good	No	5.0	None	None	36 inches to 60 inches	Unlimited	Level	No	2.0	Less than or equal to 2%	0.0	1.0	14	92
4183	26054	7/30/2015	Sandt DOT	Milford	Nashua Street	South	Unknown	Concrete	Good	No	Granite	Good	No	5.0	None	None	36 inches to 60 inches	Unlimited	Level	No	0.0	Less than or equal to 2%	0.0	1.0	14	92
4245	41214	8/7/2015	Sandt DOT	Goffstown	Main Street	Northeast	Unknown	Concrete	Good	No	Granite	Good	No	7.0	None	None	36 inches to 60 inches	Unlimited	Level	No	2.0	Less than or equal to 2%	0.0	1.0	14	92
4246	41215	8/7/2015	Sandt DOT	Goffstown	Main Street	Southwest	Unknown	Concrete	Good	No	Granite	Good	No	7.0	None	None	36 inches to 60 inches	Unlimited	Level	No	2.0	Less than or equal to 2%	0.0	1.0	14	92
4292	41263	8/12/2015	Sandt DOT	Amherst	101A	South	Unknown	Concrete	Good	No	Granite	Good	No	4.0	Grass Strip	None	36 inches to 60 inches	Unlimited	Level	No	0.0	Less than or equal to 2%	0.0	1.0	14	92
4342	41314	8/17/2015	Sandt DOT	Bennington	Main Street	West	Unknown	Concrete	Good	No	Granite	Good	No	5.0	None	None	36 inches to 60 inches	Unlimited	Level	No	1.0	Less than or equal to 2%	1.0	1.0	14	92
4344	41316	8/17/2015	Sandt DOT	Bennington	Francestown Road	South	Unknown	Concrete	Good	No	Granite	Good	No	6.0	None	None	36 inches to 60 inches	Unlimited	Level	No	1.7	Less than or equal to 2%	0.0	1.0	14	92
4346	41318	8/17/2015	Sandt DOT	Bennington	Main Street	East	Unknown	Concrete	Good	No	Granite	Good	No	6.0	Parking Spaces	None	36 inches to 60 inches	Unlimited	Level	No	3.0	Less than or equal to 2%	4.0	1.0	14	92
4347	41319	8/17/2015	Sandt DOT	Bennington	Main Street	Southwest	Unknown	Concrete	Good	No	Granite	Good	No	6.0	Parking Spaces	None	36 inches to 60 inches	Unlimited	Level	No	3.0	Less than or equal to 2%	4.0	1.0	14	92
4348	41320	8/17/2015	Sandt DOT	Bennington	Main Street	Southwest	Unknown	Concrete	Good	No	Granite	Good	No	6.0	None	None	36 inches to 60 inches	Unlimited	Level	No	1.0	Less than or equal to 2%	0.0	1.0	14	92
4353	41325	8/18/2015	Sandt DOT	Bennington	Rt 31	Southwest	Unknown	Concrete	Good	No	Granite	Good	No	5.0	None	None	36 inches to 60 inches	Unlimited	Level	No	2.0	Less than or equal to 2%	0.0	1.0	14	92
4363	41335	8/18/2015	Sandt DOT	Peterborough	202	East	Unknown	Asphalt	Good	No	Asphalt	Good	No	3.0	Grass Strip	Moveable Objects	36 inches to 60 inches	Unlimited	Level	No	0.0	Less than or equal to 2%	0.0	1.0	14	92
4427	41399	8/28/2015	Sandt DOT	Troy	Central Square	West	Unknown	Concrete	Good	No	Granite	Good	No	4.0	Parking Spaces	None	36 inches to 60 inches	Unlimited	Level	No	3.0	Less than or equal to 2%	8.0	1.0	14	92
4442	41414	8/31/2015	Sandt DOT	Hinsdale	Brattleboro Road	North	Unknown	Asphalt	Good	No	Granite	Good	No	0.0	None	None	36 inches to 60 inches	Unlimited	Less than 0.25 inches	No	7.0	Less than or equal to 2%	0.0	1.0	14	92
4486	41459	9/9/2015	Sandt DOT	Swanzey	Old Homestead Hwy	South	Unknown	Concrete	Good	No	Concrete	Good	No	5.0	None	None	36 inches to 60 inches	Unlimited	Level	No	2.0	Less than or equal to 2%	0.0	1.0	14	92
4522	41495	9/14/2015	Sandt DOT	Charlestown	East Street	West	Unknown	Asphalt	Good	No	None	N/A	No	0.0	Grass Strip	None	36 inches to 60 inches	Unlimited	Less than 0.25 inches	No	2.0	Less than or equal to 2%	0.0	1.0	14	92
4523	41496	9/14/2015	Sandt DOT	Charlestown	East Street	West	Unknown	Asphalt	Good	No	None	N/A	No	0.0	Grass Strip	None	36 inches to 60 inches	Unlimited	Less than 0.25 inches	No	0.0	Less than or equal to 2%	0.0	1.0	14	92
4524	41497	9/14/2015	Sandt DOT	Charlestown	School Street	South	Unknown	Asphalt	Good	No	None	N/A	No	0.0	Grass Strip	None	36 inches to 60 inches	Unlimited	Less than 0.25 inches	No	2.0	Less than or equal to 2%	0.0	1.0	14	92
4738	41711	10/6/2015	Sandt DOT	Dover	Knox Marsh Road	Northwest	Unknown	Concrete	Good	No	Granite	Fair	No	4.0	None	None	36 inches to 60 inches	Unlimited	Level	No	2.0	Less than or equal to 2%	0.0	1.0	14	92
4739	41712	10/6/2015	Sandt DOT	Dover	Knox Marsh Road	Northwest	Unknown	Concrete	Good	No	Granite	Fair	No	4.0	None	None	36 inches to 60 inches	Unlimited	Level	No	2.0	Less than or equal to 2%	0.0	1.0	14	92
4867	42680	10/22/2015	Sandt DOT	Portsmouth	Woodbury Ave	East	Unknown	Concrete	Good	No	Granite	Good	No	5.0	Grass Strip	None	36 inches to 60 inches	Unlimited	Level	No	5.0	Less than or equal to 2%	1.0	1.0	14	92
4878	42691	10/23/2015	Sandt DOT	Newmarket	Exeter Road	East	Unknown	Concrete	Good	No	Granite	Good	No	5.0	None	None	36 inches to 60 inches	Unlimited	Level	No	8.0	Less than or equal to 2%	1.0	1.0	14	92
4879	42692	10/23/2015	Sandt DOT	Newmarket	Exeter Road	East	Unknown	Concrete	Good	No	Granite	Good	No	5.0	None	None	36 inches to 60 inches	Unlimited	Level	No	7.0	Less than or equal to 2%	10.0	1.0	14	92
5007	42902	10/27/2015	Wilkinson District 1	Colebrook	Rte.3	West	Unknown	Concrete	Good	No	Granite	Good	No	7.0	Parking Spaces	None	36 inches to 60 inches	Unlimited	Level	No	0.0	Less than or equal to 2%	0.0	1.0	14	92
5065	42960	11/2/2015	Sandt DOT	Hampton	Ocean Blvd	East	Unknown	Concrete	Good	No	Granite	Good	No	3.0	Grass Strip	None	36 inches to 60 inches	Unlimited	Level	No	1.0	Less than or equal to 2%	0.0	1.0	14	92
5074	42969	11/2/2015	Sandt DOT	Seabrook	286	North	Unknown	Concrete	Good	No	Granite	Good	No	6.0	None	None	36 inches to 60 inches	Unlimited	Level	No	1.0	Less than or equal to 2%	9.0	1.0	14	92
5121	0	11/16/2015	Sandt DOT	Ossipee	25	North	Unknown	Concrete	Good	No	Granite	Good	No	4.0	None	None	36 inches to 60 inches	Unlimited	Level	No	1.0	Less than or equal to 2%	0.0	1.0	14	92
5125	0	11/16/2015	Sandt DOT	Ossipee	25	South	Unknown	Concrete	Good	No	Granite	Good	No	4.0	None	None	36 inches to 60 inches	Unlimited	Level	No	1.0	Less than or equal to 2%	0.0	1.0	14	92
5157	0	11/19/2015	Nichols district 1	Gorham	Rte 2	North-East	Unknown	Concrete	Good	No	Granite	Good	No	7.0	Bicycle Lane	None	36 inches to 60 inches	Unlimited	Level	No	0.5	Less than or equal to 2%	0.0	1.0	14	92
5184	0	11/6/2015	Sandt DOT	Seabrook	107	North	Unknown	Concrete	Good	No	Granite	Good	No	5.0	None	None	36 inches to 60 inches	Unlimited	Level	No	0.0	Less than or equal to 2%	0.0	1.0	14	92
6305	0	12/7/2015	Wilkinson District 1	Jefferson	Rte. 2	South	Unknown	Concrete	Good	No	Granite	Good	No	3.0	None	None	36 inches to 60 inches	Unlimited	Level	No	8.0	Less than or equal to 2%	0.0	1.0	14	92
6625	0	12/17/2015	Wilkinson District 1	Pike	Rte. 25	North	Unknown	Concrete	Good	No	Granite	Good	No	7.0	Bicycle Lane	None	36 inches to 60 inches	Unlimited	Level	No	1.0	Less than or equal to 2%	0.0	1.0	14	92
9007	0	2/29/2016	Sandt DOT	Seabrook	Rt 1	East	Unknown	Concrete	Good	No	Granite	Good	No	6.0	None	None	36 inches to 60 inches	Unlimited	Level	No	1.0	Less than or equal to 2%	0.0	1.0	14	92
9008	0	2/29/2016	Sandt DOT	Seabrook	Rt 1	East	Unknown	Concrete	Good	No	Granite	Good	No	5.0	None	None	36 inches to 60 inches	Unlimited	Level	No	1.0	Less than or equal to 2%	0.0	1.0	14	92
9009	0	2/29/2016	Sandt DOT	Seabrook	Rt 1	East	Unknown	Concrete	Good	No	Granite	Good	No	5.0	None	None	36 inches to 60 inches	Unlimited	Level	No	1.0	Less than or equal to 2%	0.0	1.0	14	92
9012	0	2/29/2016	Sandt DOT	Seabrook	Rt 1	East	Unknown	Concrete	Good	No	Granite	Good	No	6.0	Grass Strip	None	36 inches to 60 inches	Unlimited	Level	No	4.0	Less than or equal to 2%	0.0	1.0	14	92
9013	0	2/29/2016	Sandt DOT	Seabrook	Rt 1	East	Unknown	Concrete	Good	No	Granite	Good	No	5.0	None	None	36 inches to 60 inches	Unlimited	Level	No	1.0	Less than or equal to 2%	0.0	1.0	14	92
9014	0	2/29/2016	Sandt DOT	Seabrook	Rt 1	East	Unknown	Concrete	Good	No	Granite	Good	No	6.0	Grass Strip	None	36 inches to 60 inches	Unlimited	Level	No	4.0	Less than or equal to 2%	0.0	1.0	14	92
4516	41489	9/14/2015	Sandt DOT	Charlestown	Rt 12	East	Unknown	Asphalt	Good	No	None	N/A	No	0.0	Grass Strip	None	Greater than 60 inches	Greater than 80 inches	Level	No	2.0	Greater than 2%	0.0	1.0	13	92
5098	0	11/9/2015	NM SWRPC	Hinsdale	Main Street	North	Unknown	Asphalt	Good	No	Granite	Good	No	6.0	None	None	Greater than 60 inches	Greater than 80 inches	Level	No	5.0	Greater than 2%	3.0	1.0	13	92
6242	0	12/3/2015	Sandt DOT	Rumney	Mann St	East	Unknown	Asphalt	Good	No	Asphalt	Good	No	5.0	None	None	Greater than 60 inches	Greater than 80 inches	Level	No	3.0	Greater than 2%	0.0	1.0	13	92
10141	0	3/31/2016	Sandt DOT	Bow	I89	South	Unknown	Asphalt	Good	No	None	Fair	No	0.00000000000	Grass Strip	None	Greater than 60 inches	Greater than 80 inches	Level	No	2.0	Greater than 2%	0.0	1.0	13	92
464	1028	6/12/2015	Sandt DOT	Concord	Noble Drive	Northwest	NH_DOT	Asphalt	Good	No	Granite	Good	No	6.0	None	None	36 inches to 60 inches	Greater than 80 inches	Level	No	0.0	Less than or equal to 2%	0.0	1.0	13	92
465	1029	6/12/2015	Sandt DOT	Concord	Noble Drive	Northwest	NH_DOT	Asphalt	Good	No	Asphalt	Good	No	4.0	None	None	36 inches to 60 inches	Greater than 80 inches	Level	No	0.0	Less than or equal to 2%	0.0	1.0	13	92
466	1030	6/12/2015	Sandt DOT	Cocnord	DOT Car park	West	NH_DOT	Asphalt	Good	No	Granite	Good	No	4.0	None	None	36 inches to 60 inches	Greater than 80 inches	Level	No	0.0	Less than or equal to 2%	0.0	1.0	13	92
468	1032	6/12/2015	Sandt DOT	Concord	Noble Drive	South	NH_DOT	Asphalt	Good	No	Asphalt	Good	Yes	8.0	None	None	36 inches to 60 inches	Greater than 80 inches	Level	No	0.0	Less than or equal to 2%	0.0	1.0	13	92
501	1065	6/17/2015	Sandt DOT	Allenstown	Main	West	Unknown	Asphalt	Good	No	Granite	Good	No	6.0	None	None	36 inches to 60 inches	Greater than 80 inches	Level	No	0.0	Less than or equal to 2%	0.0	1.0	13	92

4875	42688	10/22/2015	Sandt DOT	Portsmouth	Pease Blvd	South	Unknown	Asphalt	Good	No	Granite	Good	No	6.0 Grass Strip	None	36 inches to 60 inches	Greater than 80 inches	Level	No	1.0 Less than or equal to 2%	3.0	1.0	13	92
5110	0	11/10/2015	NM SWRPC	Hinsdale	Main St	South	Unknown	Asphalt	Good	No	Granite	Good	No	0.0 None	None	36 inches to 60 inches	Greater than 80 inches	Level	No	8.0 Less than or equal to 2%	1.0	1.0	13	92
5145	0	11/18/2015	Sandt DOT	Ossipee	Main	North	Unknown	Asphalt	Good	No	Granite	Good	No	5.0 Parking Spaces	None	36 inches to 60 inches	Greater than 80 inches	Level	No	5.0 Less than or equal to 2%	0.0	1.0	13	92
6145	0	11/25/2015	Nichols district 1	Gorham	Rte 16	North-East	Unknown	Asphalt	Good	No	Granite	Fair	No	4.0 None	None	36 inches to 60 inches	Greater than 80 inches	Level	No	2.0 Less than or equal to 2%	0.0	1.0	13	92
6159	0	11/25/2015	Sandt DOT	Alton	Rt 11	East	Unknown	Asphalt	Good	No	Granite	Good	No	4.0 None	None	36 inches to 60 inches	Greater than 80 inches	Level	No	6.0 Less than or equal to 2%	11.0	1.0	13	92
6165	0	11/25/2015	Sandt DOT	Alton	Rt 11	South	Unknown	Asphalt	Good	No	Granite	Good	No	5.0 None	None	36 inches to 60 inches	Greater than 80 inches	Level	No	3.0 Less than or equal to 2%	11.0	1.0	13	92
6166	0	11/25/2015	Sandt DOT	Alton	Rt 11	South	Unknown	Asphalt	Good	No	Granite	Good	No	5.0 None	None	36 inches to 60 inches	Greater than 80 inches	Level	No	3.0 Less than or equal to 2%	0.0	1.0	13	92
6167	0	11/25/2015	Sandt DOT	Alton	Rt 11	South	Unknown	Asphalt	Good	No	Granite	Good	No	5.0 None	None	36 inches to 60 inches	Greater than 80 inches	Level	No	3.0 Less than or equal to 2%	2.0	1.0	13	92
6168	0	11/25/2015	Sandt DOT	Alton	Rt 11	North	Unknown	Asphalt	Good	No	Granite	Good	No	5.0 None	None	36 inches to 60 inches	Greater than 80 inches	Level	No	3.0 Less than or equal to 2%	1.0	1.0	13	92
6169	0	11/25/2015	Sandt DOT	Alton	Rt 28	North	Unknown	Asphalt	Good	No	Granite	Good	No	5.0 None	None	36 inches to 60 inches	Greater than 80 inches	Level	No	1.0 Less than or equal to 2%	0.0	1.0	13	92
6170	0	11/25/2015	Sandt DOT	Alton	Rt 28	South	Unknown	Asphalt	Good	No	Granite	Good	No	5.0 None	None	36 inches to 60 inches	Greater than 80 inches	Level	No	1.0 Less than or equal to 2%	0.0	1.0	13	92
6171	0	11/25/2015	Sandt DOT	Alton	Rt 28	South	Unknown	Asphalt	Good	No	Granite	Good	No	5.0 None	None	36 inches to 60 inches	Greater than 80 inches	Level	No	1.0 Less than or equal to 2%	0.0	1.0	13	92
6194	42649	11/30/2015	Sandt DOT	Concord	Rt 13	South	Unknown	Asphalt	Good	No	Granite	Good	No	6.0 Grass Strip	None	36 inches to 60 inches	Greater than 80 inches	Level	No	2.0 Less than or equal to 2%	5.0	1.0	13	92
6195	42649	11/30/2015	Sandt DOT	Concord	Rt 13	South	Unknown	Asphalt	Good	No	Granite	Good	No	6.0 Grass Strip	None	36 inches to 60 inches	Greater than 80 inches	Level	No	2.0 Less than or equal to 2%	1.0	1.0	13	92
6197	42649	11/30/2015	Sandt DOT	Concord	Rt 13	South	Unknown	Asphalt	Good	No	Granite	Good	No	6.0 Grass Strip	None	36 inches to 60 inches	Greater than 80 inches	Level	No	2.0 Less than or equal to 2%	1.0	1.0	13	92
6198	42649	11/30/2015	Sandt DOT	Concord	Rt 13	South	Unknown	Asphalt	Good	No	Granite	Good	No	6.0 Grass Strip	None	36 inches to 60 inches	Greater than 80 inches	Level	No	2.0 Less than or equal to 2%	1.0	1.0	13	92
6201	42649	11/30/2015	Sandt DOT	Concord	Rt 13	North	Unknown	Asphalt	Good	No	Granite	Good	No	7.0 Grass Strip	None	36 inches to 60 inches	Greater than 80 inches	Level	No	2.0 Less than or equal to 2%	2.0	1.0	13	92
6202	42649	11/30/2015	Sandt DOT	Concord	Rt 13	North	Unknown	Asphalt	Good	No	Granite	Good	No	5.0 Grass Strip	None	36 inches to 60 inches	Greater than 80 inches	Level	No	2.0 Less than or equal to 2%	5.0	1.0	13	92
6234	0	12/3/2015	Sandt DOT	Thornton	Rt 49	North	Unknown	Asphalt	Good	No	Granite	Good	No	6.0 None	None	36 inches to 60 inches	Greater than 80 inches	Level	No	3.0 Less than or equal to 2%	0.0	1.0	13	92
6397	0	12/9/2015	Wilkinson District 1	Carroll	Rte. 302	North	Unknown	Asphalt	Good	No	Granite	Good	No	6.0 None	None	36 inches to 60 inches	Greater than 80 inches	Level	No	2.0 Less than or equal to 2%	17.0	1.0	13	92
6408	0	12/9/2015	Wilkinson District 1	Carroll	Rte. 3	West	Unknown	Asphalt	Good	No	Granite	Good	No	6.0 Bicycle Lane	None	36 inches to 60 inches	Greater than 80 inches	Level	No	3.0 Less than or equal to 2%	2.0	1.0	13	92
6436	0	12/10/2015	Wilkinson District 1	Bethlehem	Rte. 302	South	Unknown	Asphalt	Good	No	None	Good	No	0.0 Grass Strip	None	36 inches to 60 inches	Greater than 80 inches	Level	No	3.0 Less than or equal to 2%	0.0	1.0	13	92
6447	0	12/10/2015	Sandt DOT	Laconia	Rt 3	North	Unknown	Asphalt	Good	No	Granite	Good	No	5.0 None	None	36 inches to 60 inches	Greater than 80 inches	Level	No	6.0 Less than or equal to 2%	1.0	1.0	13	92
6448	0	12/10/2015	Sandt DOT	Laconia	Rt 3	North	Unknown	Asphalt	Good	No	Granite	Good	No	5.0 None	None	36 inches to 60 inches	Greater than 80 inches	Level	No	7.0 Less than or equal to 2%	1.0	1.0	13	92
6449	0	12/10/2015	Sandt DOT	Laconia	Rt 3	North	Unknown	Asphalt	Good	No	Granite	Good	No	5.0 None	None	36 inches to 60 inches	Greater than 80 inches	Level	No	3.0 Less than or equal to 2%	1.0	1.0	13	92
6450	0	12/10/2015	Sandt DOT	Laconia	Rt 3	North	Unknown	Asphalt	Good	No	Granite	Good	No	5.0 None	None	36 inches to 60 inches	Greater than 80 inches	Level	No	3.0 Less than or equal to 2%	1.0	1.0	13	92
6451	0	12/10/2015	Sandt DOT	Laconia	Rt 3	South	Unknown	Asphalt	Good	No	Granite	Good	No	5.0 None	None	36 inches to 60 inches	Greater than 80 inches	Level	No	2.0 Less than or equal to 2%	0.0	1.0	13	92
6486	0	12/14/2015	Sandt DOT	Bristol	Rt 104	South	Unknown	Asphalt	Good	No	Granite	Good	No	3.0 None	None	36 inches to 60 inches	Greater than 80 inches	Level	No	1.0 Less than or equal to 2%	5.0	1.0	13	92
6501	0	12/14/2015	Sandt DOT	Tilton	Silver Lake Rd	North	Unknown	Asphalt	Good	No	Granite	Good	No	5.0 None	None	36 inches to 60 inches	Greater than 80 inches	Level	No	3.0 Less than or equal to 2%	6.0	1.0	13	92
6502	0	12/14/2015	Sandt DOT	Tilton	Silver Lake Rd	North	Unknown	Asphalt	Good	No	Granite	Good	No	5.0 None	None	36 inches to 60 inches	Greater than 80 inches	Level	No	3.0 Less than or equal to 2%	6.0	1.0	13	92
6558	0	12/15/2015	Sandt DOT	Tilton	School Street	West	Unknown	Asphalt	Good	No	Granite	Good	No	6.0 Grass Strip	None	36 inches to 60 inches	Greater than 80 inches	Level	No	6.0 Less than or equal to 2%	2.0	1.0	13	92
6630	0	12/17/2015	Wilkinson District 1	Warren	Rte.11B	East	Unknown	Asphalt	Good	No	Granite	Good	No	5.0 Grass Strip	None	36 inches to 60 inches	Greater than 80 inches	Level	No	1.0 Less than or equal to 2%	12.0	1.0	13	92
6633	0	12/17/2015	Wilkinson District 1	Warren	Rte.11B	East	Unknown	Asphalt	Good	No	Granite	Good	No	5.0 Grass Strip	None	36 inches to 60 inches	Greater than 80 inches	Level	No	2.0 Less than or equal to 2%	3.0	1.0	13	92
6678	0	12/22/2015	NM SWRPC	Troy	Rt 12	South-West	Unknown	Asphalt	Good	No	Granite	Good	No	3.0 None	None	36 inches to 60 inches	Greater than 80 inches	Level	No	3.0 Less than or equal to 2%	1.0	1.0	13	92
6722	0	12/16/2015	Sandt DOT	Tilton	Rt 3	South	Unknown	Asphalt	Good	No	None	Good	No	0.0 Grass Strip	None	36 inches to 60 inches	Greater than 80 inches	Level	No	2.0 Less than or equal to 2%	0.0	1.0	13	92
6739	0	12/28/2015	NM SWRPC	Hinsdale	School st	West	Unknown	Asphalt	Good	No	Asphalt	Poor	No	5.0 Grass Strip	None	36 inches to 60 inches	Greater than 80 inches	Level	No	1.0 Less than or equal to 2%	1.0	1.0	13	92
6788	0	1/7/2016	Sandt DOT	Tilton	Rt 3	South	Unknown	Asphalt	Good	No	Granite	Good	No	5.0 None	None	36 inches to 60 inches	Greater than 80 inches	Level	No	2.0 Less than or equal to 2%	0.0	1.0	13	92
6795	0	1/7/2016	Nichols district 1	Woodsville	Rte 10	West	Unknown	Asphalt	Good	No	Granite	Good	No	6.0 Bicycle Lane	None	36 inches to 60 inches	Greater than 80 inches	Level	No	1.0 Less than or equal to 2%	0.0	1.0	13	92
6796	0	1/7/2016	Nichols district 1	Woodsville	Rte 10	West	Unknown	Asphalt	Good	No	Granite	Good	No	6.0 Bicycle Lane	None	36 inches to 60 inches	Greater than 80 inches	Level	No	1.0 Less than or equal to 2%	2.0	1.0	13	92
7851	0	1/11/2016	Nichols district 1	Woodsville	Rte 302	North	Unknown	Asphalt	Good	No	Granite	Good	No	6.0 None	None	36 inches to 60 inches	Greater than 80 inches	Level	No	1.0 Less than or equal to 2%	3.0	1.0	13	92
9030	0	3/8/2016	Sandt DOT	Boscawen	Rt 4	South	Unknown	Asphalt	Good	No	Granite	Good	No	6.0 None	None	36 inches to 60 inches	Greater than 80 inches	Level	No	2.0 Less than or equal to 2%	1.0	1.0	13	92
9033	0	3/8/2016	Sandt DOT	Boscawen	Rt 4	South	Unknown	Asphalt	Good	No	Granite	Good	No	6.0 None	None	36 inches to 60 inches	Greater than 80 inches	Level	No	1.0 Less than or equal to 2%	0.0	1.0	13	92
9071	0	3/16/2016	Sandt DOT	Plaistow	Rt 125	East	Unknown	Asphalt	Good	No	Granite	Good	No	6.0000000000 None	None	36 inches to 60 inches	Greater than 80 inches	Level	No	1.0 Less than or equal to 2%	0.0	1.0	13	92
9072	0	3/16/2016	Sandt DOT	Plaistow	Rt 121A	East	Unknown	Asphalt	Good	No	Granite	Good	No	6.0000000000 None	None	36 inches to 60 inches	Greater than 80 inches	Level	No	2.0 Less than or equal to 2%	1.0	1.0	13	92
9073	0	3/16/2016	Sandt DOT	Plaistow	Rt 121A	West	Unknown	Asphalt	Good	No	Granite	Good	No	4.0000000000 None	None	36 inches to 60 inches	Greater than 80 inches	Level	No	2.0 Less than or equal to 2%	4.0	1.0	13	92
10115	0	3/28/2016	Sandt DOT	Portsmouth	Portsmouth Transportation Center	North	Unknown	Asphalt	Good	No	Granite	Good	No	2.0000000000 None	None	36 inches to 60 inches	Greater than 80 inches	Level	No	1.0 Less than or equal to 2%	0.0	1.0	13	92
10123	0	3/30/2016	Sandt DOT	Plaistow	Elm Street	North-West	Unknown	Asphalt	Good	No	Granite	Good	No	5.0000000000 Parking Spaces	None	36 inches to 60 inches	Greater than 80 inches	Level	No	0.0 Less than or equal to 2%	1.0	1.0	13	92
10127	0	3/30/2016	Sandt DOT	Plaistow	Main Street	West	Unknown	Asphalt	Good	No	Granite	Good	No	4.0000000000 None	None	36 inches to 60 inches	Greater than 80 inches	Level	No	5.0 Less than or equal to 2%	3.0	1.0	13	92
10132	0	3/30/2016	Sandt DOT	Plaistow	Main Street	East	Unknown	Asphalt	Good	No	Granite	Good	No	4.0000000000 Parking Spaces	None	36 inches to 60 inches	Greater than 80 inches	Level	No	7.0 Less than or equal to 2%	2.0	1.0	13	92
10135	0	3/30/2016	Sandt DOT	Plaistow	Main Street	West	Unknown	Asphalt	Good	No	Asphalt	Fair	No	2.0000000000 None	None	36 inches to 60 inches	Greater than 80 inches	Level	No	2.0 Less than or equal to 2%	2.0	1.0	13	92
10136	0	3/30/2016	Sandt DOT	Plaistow	Main Street	West	Unknown	Asphalt	Good	No	None	N/A	No	0.0000000000 Grass Strip	None	36 inches to 60 inches	Greater than 80 inches	Level	No	3.0 Less than or equal to 2%	0.0	1.0	13	92
10137	0	3/30/2016	Sandt DOT	Plaistow	Main Street	West	Unknown	Asphalt	Good	No	None	N/A	No	0.0000000000 Grass Strip	None	36 inches to 60 inches	Greater than 80 inches	Level	No	2.0 Less than or equal to 2%	0.0	1.0	13	92
752	2251	7/15/2015	Sandt DOT	Salem	Salem Rest Area	Northeast	Unknown	Asphalt	Good	No	Granite	Good	No	5.0 None	None	36 inches to 60 inches	Greater than 80 inches	0.25 inches to 0.50 inches	No	0.0 Less than or equal to 2%	3.0	1.0	12	93
4542	41515	9/16/2015	Sandt DOT	Newport	Rt 10	West	Unknown	Asphalt	Brick	No	Granite	Good	No	6.0 Parking Spaces	None	Greater than 60 inches	Unlimited	Level	No	4.0 Less than or equal to 2%	1.0	1.0	12	93
4733	41706	10/6/2015	Sandt DOT	Dover	Littleworth Road	Northeast	Unknown	Asphalt	Asphalt	No	Granite	Good	No	6.0 None	None	Greater than 60 inches	Less than 80in	Level	No	3.0 Less than or equal to 2%	1.0	1.0	12	93
4665	41638	9/29/2015	Sandt DOT	Durham	Mast Road	South	Unknown	Asphalt	Good	No	None	N/A	No	0.0 Grass Strip	None	Greater than 60 inches	Unlimited	Level	No	2.0 Greater than 2%	0.0	1.0	10	94
4757	41730	10/7/2015	Sandt DOT	Dover	Rt 4/16	Northeast	Unknown	Asphalt	Good	No	None	N/A	No	0.0 Grass Strip	None	Greater than 60 inches	Unlimited	Level	No	2.0 Greater than 2%	0.0	1.0	10	94
4909	42722	10/26/2015	Sandt DOT	North Hampton	Ocean Blvd	East	Unknown	Asphalt	Fair	No	Granite	Good	No	3.0 Parking Spaces	None	Greater than 60 inches	Unlimited	Level	No	0.0 Less than or equal to 2%	0.0	1.0	10	94
4941	42755	10/27/2015	Sandt DOT	Hampton	Ocean Blvd	East	Unknown	Asphalt	Good	No	Granite	Good	No	6.0 Parking Spaces	None	Greater than 60 inches	Unlimited	Level	No	2.0 Greater than 2%	3.0	1.0	10	94
4960	42775	10/29/2015	Sandt DOT	Hampton	Ocean Blvd	W	Unknown	Asphalt	Good	No	Asphalt	Poor	No	0.0 None	None	Greater than 60 inches	Unlimited	Level	No	1.0 Greater than 2%	0.0	1.0	10	94
4978	42793	10/29/2015	Sandt DOT	Hampton	Ocean Blvd	W	Unknown	Asphalt	Good	No	Granite	Good	No	8.0 Parking Spaces	None	Greater than 60 inches	Unlimited	Level	No	4.0 Greater than 2%	1.0	1.0	10	94
469	1033	6/12/2015	Sandt DOT	Concord	Noble Drive	South	NH_DOT	Asphalt	Good	No	Granite	Good	Yes	6.0 None	None	36 inches to 60 inches	Unlimited	Level	No	0.0 Less than or equal to 2%	0.0	1.0	10	94
471	1035	6/12/2015	Sandt DOT	Concord	Noble Drive	South	NH_DOT	Asphalt	Good	No	Granite	Good	No	6.0 None	None	36 inches to 60 inches	Unlimited	Level	No	0.0 Less than or equal to 2%	0.0	1.0	10	94
472	1036	6/12/2015	Sandt DOT	Concord	Noble Drive	North	NH_DOT	Asphalt	Good	No	Granite	Good	No	6.0 None	None	36 inches to 60 inches	Unlimited	Level	No	0.0 Less than or equal to 2%	0.0	1.0	10	94
499	1063	6/17/2015	Sandt DOT	Allenstown	Main	East	Unknown	Asphalt	Good	No	None	N/A	No	0.0 Grass Strip	None	36 inches to 60 inches	Unlimited	Level	No	0.0 Less than or equal to 2%	0.0	1.0	10	94
517	1082	6/23/2015	Sandt DOT	Hooksett	Londonderry Tpke	Southwest	Unknown	Asphalt	Good	No	Granite	Good	No	5.0 None	None	36 inches to 60 inches	Unlimited	Level	No	0.0 Less than or equal to 2%	4.0	1.0	10	94
518	1083	6/23/2015	Sandt DOT	Hooksett	Hooksett Road	East	Unknown	Asphalt	Good	No	Granite	Good	No	5.0 None	None	36 inches to 60 inches	Unlimited	Level	No	0.0 Less than or equal to 2%	3.0	1.0	10	94
519	1084	6/23/2015	Sandt DOT	Hooksett	Hooksett Road	East	Unknown	Asphalt	Good	No	Granite	Good	No	7.0 None	None	36 inches to 60 inches	Unlimited	Level	No	0.0 Less than or equal to 2%	7.0	1.0	10	94
520	1085	6/23/2015	Sandt DOT	Hooksett	Hooksett Road	East	Unknown	Asphalt	Good	No	Granite	Good	No	7.0 None	None	36 inches to 60 inches	Unlimited	Level	No	0.0 Less than or equal to 2%	3.0	1.0	10	94
581	2080	6/26/2015	MC SWRPC	North Walpole	Church Street	West	Unknown	Asphalt	Good	No	Granite	Good	No	2.5 None	None	36 inches to 60 inches	Unlimited	Level	No	2.0 Less than or equal to 2%	1.0	1.0	10	94
612	2111	6/26/2015	MC SWRPC	North Walpole	Main Street	Northeast	Unknown	Asphalt	Good	No	Granite	Good	No	5.0 Other	None	36 inches to 60 inches	Unlimited	Level	No	5.0 Less than or equal to 2%	4.0	1.0	10	94
653	2152	7/6/2015	Sandt DOT	Manchester	S Willow Street	South	Unknown	Asphalt	Good	No	Granite	Good	No	6.0 None	None	36 inches to 60 inches	Unlimited	Level	No	0.0 Less than or equal to 2%	0.0	1.0	10	94
658	2157	7/6/2015	Sandt DOT	Bedford	S River Road	North	Unknown	Asphalt	Good	No	Granite	Good	No	7.0 None	None	36 inches to 60 inches	Unlimited	Level	No	0.0 Less than or equal to 2%	0.0	1.0	10	94
661	2160	7/7/2015	Sandt DOT	Concord	W Portsmouth Street	South	Unknown	Asphalt	Good	No	Granite	Good	No	6.0 None	None	36 inches to 60 inches	Unlimited	Level	No	3.0 Less than or equal to 2%	0.0	1.0	10	94
663	2162	7/7/2015	Sandt DOT	Concord	W Portsmouth Street	West	Unknown	Asphalt	Good	No	Granite	Good	No	7.0 None	None	36 inches to 60 inches	Unlimited	Level	No	3.0 Less than or equal to 2%	0.0	1.0	10	94
670	2169	7/9/2015	Sandt DOT	Bedford	S River Road	East	Unknown	Asphalt	Good	No	Granite	Good	No	6.0 None	None	36 inches to 60 inches	Unlimited	Level	No	0.0 Less than or equal to 2%	0.0	1.0	10	94
671	2170	7/9/2015	Sandt DOT	Bedford	S River Road	East	Unknown	Asphalt	Good	No	Granite	Good	No	6.0 None	None	36 inches to 60 inches	Unlimited	Level	No	0.0 Less than or equal to 2%	0.0	1.0	10	94
672	2171	7/9/2015	Sandt DOT	Bedford	S River Road	East	Unknown	Asphalt	Good	No	Granite	Good	No	6.0 None	None	36 inches to 60 inches	Unlimited	Level	No	1.0 Less than or equal to 2%	0.0	1.0	10	94
673	2172	7/9/2015	Sandt DOT	Bedford	S River Road	East	Unknown	Asphalt	Good	No	Granite	Good	No	6.0 None	None	36 inches to 60 inches	Unlimited	Level	No	0.0 Less than or equal to 2%	0.0	1.0	10	94
687	2186	7/9/2015	Sandt DOT	Merrimack	Daniel Webster Hwy	West	Unknown	Asphalt	Good	No	Granite	Good	No	5.0 None	None	36 inches to 60 inches	Unlimited	Level	No	0.0 Less than or equal to 2%	1.0	1.0	10	94
688	2187	7/9/2015	Sandt DOT	Merrimack	Daniel Webster Hwy	West	Unknown	Asphalt	Good	No	Granite	Good	No	5.0 None	None	36 inches to 60 inches	Unlimited	Level	No	0.0 Less than or equal to 2%	2.0	1.0	10	94
689	2188	7/9/2015	Sandt DOT	Merrimack	Daniel Webster Hwy	West	Unknown	Asphalt	Good	No	None	N/A	No	0.0 Grass Strip	None	36 inches to 60 inches	Unlimited	Level	No	0.0 Less than or equal to 2%	0.0	1.0	10	94
690	2189	7/9/2015	Sandt DOT	Merrimack	Daniel Webster Hwy	West	Unknown	Asphalt	Good	No	None	N/A	No	0.0 Grass Strip	None	36 inches to 60 inches	Unlimited	Level	No	0.0 Less than or equal to 2%	0.0	1.0	10	94
691	2190	7/9/2015	Sandt DOT	Merrimack	Daniel Webster Hwy	West	Unknown	Asphalt	Good	No	None	N/A	No	0.0 Grass Strip	None	36 inches to 60 inches	Unlimited	Level	No	0.0 Less than or equal to 2%	0.0	1.0	10	94
692	2191	7/9/2015	Sandt DOT	Merrimack	Daniel Webster Hwy	West	Unknown	Asphalt	Good	No	None	N/A	No	0.0 Grass Strip	None	36 inches to 60 inches	Unlimited	Level	No	0.0 Less than or equal to 2%	0.0	1.0	10	94
693	2192	7/9/2015	Sandt DOT	Merrimack	Daniel Webster Hwy	West	Unknown	Asphalt	Good	No	Granite	Good	No	3.0 None	None	36 inches to 60 inches	Unlimited	Level	No	0.0 Less than or equal to 2%	0.0	1.0	10	94
694	2193	7/9/2015	Sandt DOT	Merrimack	Daniel Webster Hwy	West	Unknown	Asphalt	Good	No	None	N/A	No	0.0 Grass Strip	None	36 inches to 60 inches	Unlimited	Level	No	7.0 Less than or equal to 2%	0.0	1.0	10	94
695	2194	7/9/2015	Sandt DOT	Merrimack	Daniel Webster Hwy	West	Unknown	Asphalt	Good	No	None	N/A	No	0.0 Grass Strip	None	36 inches to 60 inches	Unlimited	Level	No	0.0 Less than or equal to 2%	0.0	1.0	10	94
703	2202	7/10/2015	Sandt DOT	Nashua	111	South	Unknown	Asphalt	Good	No	Granite	Good	No	6.0 None	None	36 inches to 60 inches	Unlimited	Level	No	1.0 Less than or equal to 2%	0.0	1.0	10	94
704	2203	7/10/2015	Sandt DOT	Nashua	111	Northwest	Unknown	Asphalt	Good	No	Granite	Good	No	6.0 None	None	36 inches to 60 inches	Unlimited	Level	No	1.0 Less than or equal to 2%	0.0	1.0	10	94
705	2204	7/10/2015	Sandt DOT	Nashua	111	West	Unknown	Asphalt	Good	No	Granite	Good	No	6.0 None	None	36 inches to 60 inches	Unlimited	Level	No	1.0 Less than or equal to 2%	0.0	1.0	10	94
722	2221	7/13/2015	Sandt DOT	Nashua	East Dunstable Road	West	Unknown	Asphalt	Good	No	Granite	Good	No	6.0 None	None	36 inches to 60 inches	Unlimited	Level	No	6.0 Less than or equal to 2%	0.0	1.0	10	94
725	2224	7/13/2015	Sandt DOT	Nashua	East Dunstable Road	East	Unknown	Asphalt	Good	No	Granite	Good	No	6.0 None	None	36 inches to 60 inches	Unlimited	Level	No	2.0 Less than or equal to 2%	0.0	1.0	10	94
729	2228	7/13/2015	Sandt DOT	Nashua	East Dunstable Road	East	Unknown	Asphalt	Good	No	None	N/A	No	6.0 Grass Strip	None	36 inches to 60 inches	Unlimited	Level	No	6.0 Less than or equal to 2%	0.0	1.0	10	94
735	2234	7/13/2015	Sandt DOT	Nashua	Daniel Webster Hwy	Southwest	Unknown	Asphalt	Good	No	Granite	Good	No	5.0 None	None	36 inches to 60 inches	Unlimited	Level	No	2.0 Less than or equal to 2%	0.0	1.0	10	94
740	2239	7/14/2015	Sandt DOT	Hudson	Lowell	East	Unknown	Asphalt	Good	No	Granite	Good	No	6.0 None	None	36 inches to 60 inches	Unlimited	Level	No	2.0 Less than or equal to 2%	3.0	1.0	10	94
741	2240	7/14/2015	Sandt DOT	Hudson	Derry Street	West	Unknown	Asphalt	Good	No	None	N/A	No	0.0 Grass Strip	None	36 inches to 60 inches	Unlimited	Level	No	1.0 Less than or equal to 2%	0.0	1.0	10	94
742	2241	7/14/2015	Sandt DOT	Hudson	Derry Street/Megan Drive	Northwest	Unknown	Asphalt	Good	No	Granite	Good	No	6.0 Grass Strip	None	36 inches to 60 inches	Unlimited	Level	No	0.0 Less than or equal to 2%	4.0	1.0	10	94
743	2242	7/14/2015	Sandt DOT	Hudson	Derry Street	East	Unknown	Asphalt	Good	No	Granite	Good	No	7.0 Bicycle Lane	None	36 inches to 60 inches	Unlimited	Level	No	0.0 Less than or equal to 2%	0.0	1.0	10	94
744	2243	7/14/2015	Sandt DOT	Hudson	Derry Street	East	Unknown	Asphalt	Good	No	Granite	Good	No	7.0 Bicycle Lane	None	36 inches to 60 inches	Unlimited	Level	No	0.0 Less than or equal to 2%	0.0	1.0	10	94
745	2244	7/14/2015	Sandt DOT	Hudson	Derry Street	East	Unknown	Asphalt	Good	No	Granite	Good	No	7.0 Bicycle Lane	None	36 inches to 60 inches	Unlimited	Level	No	2.0 Less than or equal to 2%	0.0	1.0	10	94
746	2245	7/14/2015	Sandt DOT	Hudson	Derry Street	East	Unknown	Asphalt	Good	No	Granite	Good	No	7.0 Bicycle Lane	None	36 inches to 60 inches	Unlimited	Level	No	0.0 Less than or equal to 2%	0.0	1.0	10	94
747	2246	7/14/2015	Sandt DOT	Hudson	Derry Street	East	Unknown	Asphalt	Good	No	Granite	Good	No	5.0 Bicycle Lane	None	36 inches to 60 inches	Unlimited	Level	No	2.0 Less than or equal to 2%	0.0	1.0	10	94
748	2247	7/14/2015	Sandt DOT	Hudson	Derry Street	West	Unknown	Asphalt	Good	No	Granite	Good	No	5.0 Bicycle Lane	None	36 inches to 60 inches	Unlimited	Level	No	2.0 Less than or equal to 2%	0.0	1.0	10	94
749	2248	7/14/2015	Sandt DOT	Hudson	Derry Street	West	Unknown	Asphalt	Good	No	Granite	Good	No	5.0 Bicycle Lane	None	36 inches to 60 inches	Unlimited	Level	No	2.0 Less than or equal to 2%	0.0	1.0	10	94
757	2256	7/15/2015	Sandt DOT	Atkinson	Atkinson Depot Road	South	Unknown	Asphalt	Good	No	Granite	Good	No	5.0 None	None	36 inches to 60 inches	Unlimited	Level	No	6.0 Less than or equal to 2%	6.0	1.0	10	94
758	2257	7/15/2015	Sandt DOT	Atkinson	Atkinson Depot Road	South	Unknown	Asphalt	Good	No	Granite	Good	No	5.0 None	None	36 inches to 60 inches	Unlimited	Level	No	2.0 Less than or equal to 2%	0.0	1.0	10	94
761	2260	7/15/2015	Sandt DOT	Salem	N Broadway	East	Unknown	Asphalt	Good	No	Granite	Good	No	5.0 None	None	36 inches to 60 inches	Unlimited	Level	No	0.0 Less than or equal to 2%	0.0	1.0	10	94
762	2261	7/15/2015	Sandt DOT	Salem	N Broadway	East	Unknown	Asphalt	Good	No	Granite	Good	No	5.0 None	None	36 inches to 60 inches	Unlimited	Level	No	0.0 Less than or equal to 2%	0.0	1.0	10	94
763	2262	7/15/2015	Sandt DOT	Salem	N Broadway	East	Unknown	Asphalt	Good	No	Granite	Good	No	5.0 None	None	36 inches to 60 inches	Unlimited	Level	No	0.0 Less than or equal to 2%	0.0	1.0	10	94
764	2263	7/15/2015	Sandt DOT	Windham	111	North	Unknown	Asphalt	Good	No	Granite	Good	No	5.0 Grass Strip	None	36 inches to 60 inches	Unlimited	Level	No	3.0 Less than or equal to 2%	0.0	1.0	10	94
765	2264	7/15/2015	Sandt DOT	Windham	111	East	Unknown	Asphalt	Good	No	Granite	Good	No	5.0 None	None	36 inches to 60 inches	Unlimited	Level	No	2.0 Less than or equal to 2%	2.0	1.0	10	94
766	2265	7/15/2015	Sandt DOT	Windham	111	South	Unknown	Asphalt	Good	No	Granite	Good	No	5.0 Grass Strip	None	36 inches to 60 inches	Unlimited	Level	No	3.0 Less than or equal to 2%	0.0	1.0	10	94
767	2266	7/16/2015	Sandt DOT	Windham	111	North	Unknown	Asph

4479	41452	9/3/2015	Sandt DOT	Swanzey	Rt 10	East	Unknown	Asphalt	Good	No	None	N/A	No	0.0	Grass Strip	None	36 inches to 60 inches	Unlimited	Level	No	0.0	Less than or equal to 2%	0.0	1.0	10	94
4485	41458	9/3/2015	Sandt DOT	Swanzey	Old Homestead Hwy	South	Unknown	Asphalt	Good	No	Granite	Good	No	5.0	None	None	36 inches to 60 inches	Unlimited	Level	No	2.0	Less than or equal to 2%	1.0	1.0	10	94
4487	41460	9/3/2015	Sandt DOT	Swanzey	Old Homestead Hwy	South	Unknown	Asphalt	Good	No	Concrete	Good	No	5.0	None	None	36 inches to 60 inches	Unlimited	Level	No	4.0	Less than or equal to 2%	1.0	1.0	10	94
4538	41511	9/14/2015	Sandt DOT	N Charlestown	River Road	East	Unknown	Asphalt	Good	No	Granite	Good	No	6.0	None	None	36 inches to 60 inches	Unlimited	Level	No	5.0	Less than or equal to 2%	0.0	1.0	10	94
4588	41561	9/22/2015	Sandt DOT	Epping	Rt 125	East	Unknown	Asphalt	Good	No	Granite	Good	No	6.0	None	None	36 inches to 60 inches	Unlimited	Level	No	1.0	Less than or equal to 2%	0.0	1.0	10	94
4591	41564	9/22/2015	Sandt DOT	Epping	Rt 125	West	Unknown	Asphalt	Good	No	Granite	Good	No	6.0	None	None	36 inches to 60 inches	Unlimited	Level	No	1.0	Less than or equal to 2%	0.0	1.0	10	94
4592	41565	9/22/2015	Sandt DOT	Epping	Rt 125	West	Unknown	Asphalt	Good	No	Granite	Good	No	6.0	None	None	36 inches to 60 inches	Unlimited	Level	No	1.0	Less than or equal to 2%	0.0	1.0	10	94
4601	41574	9/23/2015	Sandt DOT	Lebanon	Rt 4A	South	Unknown	Asphalt	Good	No	Granite	Good	No	6.0	None	None	36 inches to 60 inches	Unlimited	Level	No	2.0	Less than or equal to 2%	2.0	1.0	10	94
4602	41575	9/23/2015	Sandt DOT	Lebanon	Rt 4A	South	Unknown	Asphalt	Good	No	Granite	Good	No	6.0	None	None	36 inches to 60 inches	Unlimited	Level	No	3.0	Less than or equal to 2%	2.0	1.0	10	94
4603	41576	9/23/2015	Sandt DOT	Lebanon	Rt 4A	South	Unknown	Asphalt	Good	No	Granite	Good	No	6.0	None	None	36 inches to 60 inches	Unlimited	Level	No	1.0	Less than or equal to 2%	2.0	1.0	10	94
4604	41577	9/23/2015	Sandt DOT	Lebanon	Rt 4A	South	Unknown	Asphalt	Good	No	Granite	Good	No	6.0	None	None	36 inches to 60 inches	Unlimited	Level	No	3.0	Less than or equal to 2%	0.0	1.0	10	94
4620	41593	9/24/2015	Sandt DOT	Canaan	U.S. 4	North	Unknown	Asphalt	Good	No	Granite	Good	No	4.0	Grass Strip	None	36 inches to 60 inches	Unlimited	Level	No	3.0	Less than or equal to 2%	1.0	1.0	10	94
4640	41613	9/25/2015	Sandt DOT	Exeter	Rt 27	Northeast	Unknown	Asphalt	Good	No	Granite	Good	No	6.0	None	None	36 inches to 60 inches	Unlimited	Level	No	6.0	Less than or equal to 2%	0.0	1.0	10	94
4680	41653	10/1/2015	Sandt DOT	Rochester	N Main	Southwest	Unknown	Asphalt	Good	No	Granite	Good	No	5.0	None	None	36 inches to 60 inches	Unlimited	Level	No	2.0	Less than or equal to 2%	2.0	1.0	10	94
4681	41654	10/1/2015	Sandt DOT	Rochester	N Main	Southwest	Unknown	Asphalt	Good	No	Granite	Good	No	5.0	None	None	36 inches to 60 inches	Unlimited	Level	No	2.0	Less than or equal to 2%	0.0	1.0	10	94
4715	41688	10/5/2015	Sandt DOT	Rochester	Washington Street	Northwest	Unknown	Asphalt	Good	No	Granite	Good	No	6.0	None	None	36 inches to 60 inches	Unlimited	Level	No	2.0	Less than or equal to 2%	2.0	1.0	10	94
4716	41689	10/5/2015	Sandt DOT	Rochester	Gonic Road	West	Unknown	Asphalt	Good	No	Granite	Good	No	6.0	None	None	36 inches to 60 inches	Unlimited	Level	No	1.0	Less than or equal to 2%	0.0	1.0	10	94
4737	41710	10/6/2015	Sandt DOT	Dover	Knox Marsh Road	Northwest	Unknown	Asphalt	Good	No	Granite	Good	No	5.0	None	None	36 inches to 60 inches	Unlimited	Level	No	2.0	Less than or equal to 2%	1.0	1.0	10	94
4741	41714	10/6/2015	Sandt DOT	Dover	Hartwood Road	North	Unknown	Asphalt	Good	No	None	N/A	No	0.0	Grass Strip	None	36 inches to 60 inches	Unlimited	Level	No	1.0	Less than or equal to 2%	0.0	1.0	10	94
4748	41721	10/6/2015	Sandt DOT	Dover	Knox Marsh Road	South	Unknown	Asphalt	Good	No	Granite	Good	No	6.0	None	None	36 inches to 60 inches	Unlimited	Level	No	2.0	Less than or equal to 2%	0.0	1.0	10	94
4752	41725	10/6/2015	Sandt DOT	Dover	Knox Marsh Road	South	Unknown	Asphalt	Good	No	Granite	Good	No	6.0	None	None	36 inches to 60 inches	Unlimited	Level	No	2.0	Less than or equal to 2%	2.0	1.0	10	94
4755	41728	10/7/2015	Sandt DOT	Dover	U54	North	Unknown	Asphalt	Good	No	Granite	Good	No	6.0	Grass Strip	None	36 inches to 60 inches	Unlimited	Level	No	1.0	Less than or equal to 2%	0.0	1.0	10	94
4756	41729	10/7/2015	Sandt DOT	Dover	U54	South	Unknown	Asphalt	Good	No	Granite	Good	No	6.0	Grass Strip	None	36 inches to 60 inches	Unlimited	Level	No	1.0	Less than or equal to 2%	0.0	1.0	10	94
4797	41770	10/12/2015	Sandt DOT	New Castle	Wentworth Road	Northwest	Unknown	Asphalt	Good	No	None	N/A	No	0.0	None	None	36 inches to 60 inches	Unlimited	Level	No	2.0	Less than or equal to 2%	0.0	1.0	10	94
4826	41799	10/16/2015	Sandt DOT	Concord	Commercial Street	North	Unknown	Asphalt	Good	No	Granite	Good	No	6.0	None	None	36 inches to 60 inches	Unlimited	Level	No	6.0	Less than or equal to 2%	0.0	1.0	10	94
4829	41802	10/16/2015	Sandt DOT	Concord	S Commercial Street	South	Unknown	Asphalt	Good	No	Granite	Good	No	6.0	None	None	36 inches to 60 inches	Unlimited	Level	No	4.0	Less than or equal to 2%	0.0	1.0	10	94
4832	42645	10/19/2015	Sandt DOT	Concord	South Street	West	Unknown	Asphalt	Good	No	Granite	Good	No	6.0	Grass Strip	None	36 inches to 60 inches	Unlimited	Level	No	1.0	Less than or equal to 2%	1.0	1.0	10	94
4833	42646	10/19/2015	Sandt DOT	Concord	South Street	East	Unknown	Asphalt	Good	No	Granite	Good	No	6.0	Grass Strip	None	36 inches to 60 inches	Unlimited	Level	No	1.0	Less than or equal to 2%	0.0	1.0	10	94
4834	42647	10/19/2015	Sandt DOT	Concord	South Street	East	Unknown	Asphalt	Good	No	Granite	Good	No	6.0	Grass Strip	None	36 inches to 60 inches	Unlimited	Level	No	1.0	Less than or equal to 2%	0.0	1.0	10	94
4842	42655	10/20/2015	Sandt DOT	Exeter	Portsmouth Ave	Northwest	Unknown	Asphalt	Good	No	Granite	Good	No	4.0	None	None	36 inches to 60 inches	Unlimited	Level	No	3.0	Less than or equal to 2%	6.0	1.0	10	94
4854	42667	10/21/2015	Sandt DOT	Portsmouth	Market Street	North	Unknown	Asphalt	Good	No	Granite	Good	No	6.0	None	None	36 inches to 60 inches	Unlimited	Level	No	3.0	Less than or equal to 2%	0.0	1.0	10	94
4855	42668	10/21/2015	Sandt DOT	Portsmouth	Market Street	North	Unknown	Asphalt	Good	No	Granite	Good	No	6.0	None	None	36 inches to 60 inches	Unlimited	Level	No	3.0	Less than or equal to 2%	0.0	1.0	10	94
5119	0	11/16/2015	Sandt DOT	Ossipee	25	North	Unknown	Asphalt	Good	No	Granite	Good	No	4.0	None	None	36 inches to 60 inches	Unlimited	Level	No	1.0	Less than or equal to 2%	0.0	1.0	10	94
5120	0	11/16/2015	Sandt DOT	Ossipee	25	North	Unknown	Asphalt	Good	No	Granite	Good	No	4.0	None	None	36 inches to 60 inches	Unlimited	Level	No	1.0	Less than or equal to 2%	0.0	1.0	10	94
5122	0	11/16/2015	Sandt DOT	Ossipee	25	North	Unknown	Asphalt	Good	No	Granite	Good	No	4.0	None	None	36 inches to 60 inches	Unlimited	Level	No	1.0	Less than or equal to 2%	0.0	1.0	10	94
5126	0	11/16/2015	Sandt DOT	Ossipee	25	South	Unknown	Asphalt	Good	No	Granite	Good	No	4.0	None	None	36 inches to 60 inches	Unlimited	Level	No	1.0	Less than or equal to 2%	0.0	1.0	10	94
5127	0	11/16/2015	Sandt DOT	Ossipee	25	South	Unknown	Asphalt	Good	No	Granite	Good	No	4.0	None	None	36 inches to 60 inches	Unlimited	Level	No	1.0	Less than or equal to 2%	0.0	1.0	10	94
5179	0	11/6/2015	Sandt DOT	Seabrook	107	North	Unknown	Asphalt	Good	No	Granite	Good	No	6.0	None	None	36 inches to 60 inches	Unlimited	Level	No	1.0	Less than or equal to 2%	0.0	1.0	10	94
5180	0	11/6/2015	Sandt DOT	Seabrook	107	North	Unknown	Asphalt	Good	No	Granite	Good	No	6.0	None	None	36 inches to 60 inches	Unlimited	Level	No	2.0	Less than or equal to 2%	0.0	1.0	10	94
5181	0	11/6/2015	Sandt DOT	Seabrook	107	North	Unknown	Asphalt	Good	No	Granite	Good	No	5.0	None	None	36 inches to 60 inches	Unlimited	Level	No	1.0	Less than or equal to 2%	0.0	1.0	10	94
5182	0	11/6/2015	Sandt DOT	Seabrook	107	North	Unknown	Asphalt	Good	No	Granite	Good	No	5.0	None	None	36 inches to 60 inches	Unlimited	Level	No	1.0	Less than or equal to 2%	0.0	1.0	10	94
5183	0	11/6/2015	Sandt DOT	Seabrook	107	North	Unknown	Asphalt	Good	No	Granite	Good	No	5.0	None	None	36 inches to 60 inches	Unlimited	Level	No	1.0	Less than or equal to 2%	0.0	1.0	10	94
5280	0	11/24/2015	Sandt DOT	Moultonborough	Moultonborough Neck Road	South-West	Unknown	Asphalt	Good	No	None	N/A	No	0.0	Grass Strip	None	36 inches to 60 inches	Unlimited	Level	No	1.0	Less than or equal to 2%	0.0	1.0	10	94
5281	0	11/24/2015	Sandt DOT	Moultonborough	Moultonborough Neck Road	South-West	Unknown	Asphalt	Good	No	None	N/A	No	0.0	Grass Strip	None	36 inches to 60 inches	Unlimited	Level	No	1.0	Less than or equal to 2%	0.0	1.0	10	94
6407	0	12/9/2015	Wilkinson District 1	Carroll	Rte. 3	West	Unknown	Asphalt	Good	No	None	N/A	No	0.0	Grass Strip	None	36 inches to 60 inches	Unlimited	Level	No	3.0	Less than or equal to 2%	0.0	1.0	10	94
6664	0	12/18/2015	Sandt DOT	Meredith	Rt 25	South	Unknown	Asphalt	Good	No	Granite	Good	No	5.0	None	None	36 inches to 60 inches	Unlimited	Level	No	2.0	Less than or equal to 2%	0.0	1.0	10	94
6670	0	12/18/2015	Sandt DOT	Meredith	Rt 25	South	Unknown	Asphalt	Good	No	None	N/A	No	0.0	Grass Strip	None	36 inches to 60 inches	Unlimited	Level	No	1.0	Less than or equal to 2%	0.0	1.0	10	94
6843	0	1/11/2016	Wilkinson District 1	Woodstock	Rte 112	North-West	Unknown	Asphalt	Good	No	None	N/A	No	0.0	Grass Strip	None	36 inches to 60 inches	Unlimited	Level	No	5.0	Less than or equal to 2%	0.0	1.0	10	94
9006	0	2/29/2016	Sandt DOT	Seabrook	Rt 1	East	Unknown	Asphalt	Good	No	Granite	Good	No	6.0	None	None	36 inches to 60 inches	Unlimited	Level	No	1.0	Less than or equal to 2%	0.0	1.0	10	94
9010	0	2/29/2016	Sandt DOT	Seabrook	Rt 1	East	Unknown	Asphalt	Good	No	Granite	Good	No	6.0	None	None	36 inches to 60 inches	Unlimited	Level	No	1.0	Less than or equal to 2%	0.0	1.0	10	94
9017	0	2/29/2016	Sandt DOT	Seabrook	Rt 1	East	Unknown	Asphalt	Good	No	Granite	Good	No	6.0	None	None	36 inches to 60 inches	Unlimited	Level	No	6.0	Less than or equal to 2%	0.0	1.0	10	94
9018	0	2/29/2016	Sandt DOT	Seabrook	Rt 1	East	Unknown	Asphalt	Good	No	Granite	Good	No	6.0	None	None	36 inches to 60 inches	Unlimited	Level	No	6.0	Less than or equal to 2%	0.0	1.0	10	94
9019	0	2/29/2016	Sandt DOT	Seabrook	Rt 1	East	Unknown	Asphalt	Good	No	Granite	Good	No	6.0	None	None	36 inches to 60 inches	Unlimited	Level	No	2.0	Less than or equal to 2%	2.0	1.0	10	94
9020	0	2/29/2016	Sandt DOT	Seabrook	Rt 1	West	Unknown	Asphalt	Good	No	Granite	Good	No	6.0	None	None	36 inches to 60 inches	Unlimited	Level	No	2.0	Less than or equal to 2%	4.0	1.0	10	94
9023	0	3/7/2016	Sandt DOT	Swanzey	Rt 12	West	Unknown	Asphalt	Good	No	Granite	Good	No	5.0	None	None	36 inches to 60 inches	Unlimited	Level	No	4.0	Less than or equal to 2%	3.0	1.0	10	94
9068	0	3/15/2016	Sandt DOT	Salem	Salem Park n Ride	North-East	Unknown	Asphalt	Good	No	Granite	Good	No	5.0000000000	None	None	36 inches to 60 inches	Unlimited	Level	No	1.0	Less than or equal to 2%	0.0	1.0	10	94
9074	0	3/16/2016	Sandt DOT	Plaistow	Rt 125	East	Unknown	Asphalt	Good	No	Granite	Good	No	5.0000000000	None	None	36 inches to 60 inches	Unlimited	Level	No	1.0	Less than or equal to 2%	4.0	1.0	10	94
9075	0	3/16/2016	Sandt DOT	Plaistow	Rt 125	East	Unknown	Asphalt	Good	No	Granite	Good	No	5.0000000000	None	None	36 inches to 60 inches	Unlimited	Level	No	1.0	Less than or equal to 2%	4.0	1.0	10	94
9076	0	3/16/2016	Sandt DOT	Plaistow	Rt 125	East	Unknown	Asphalt	Good	No	Granite	Good	No	5.0000000000	None	None	36 inches to 60 inches	Unlimited	Level	No	1.0	Less than or equal to 2%	0.0	1.0	10	94
9080	0	3/16/2016	Sandt DOT	Plaistow	Rt 125	West	Unknown	Asphalt	Good	No	Granite	Good	No	5.0000000000	None	None	36 inches to 60 inches	Unlimited	Level	No	2.0	Less than or equal to 2%	3.0	1.0	10	94
9084	0	3/16/2016	Sandt DOT	Plaistow	East Rd	South	Unknown	Asphalt	Good	No	Granite	Good	No	4.0000000000	None	None	36 inches to 60 inches	Unlimited	Level	No	6.0	Less than or equal to 2%	0.0	1.0	10	94
9091	0	3/17/2016	Wilkinson District 1	Lincoln	Rte. 112	South-East	Unknown	Asphalt	Good	No	Granite	Good	No	3.0000000000	Grass Strip	None	36 inches to 60 inches	Unlimited	Level	No	2.0	Less than or equal to 2%	0.0	1.0	10	94
9102	0	3/18/2016	Sandt DOT	Plaistow	Rt 125	East	Unknown	Asphalt	Good	No	Granite	Good	No	6.0000000000	Grass Strip	None	36 inches to 60 inches	Unlimited	Level	No	7.0	Less than or equal to 2%	0.0	1.0	10	94
9104	0	3/18/2016	Sandt DOT	Plaistow	Rt 125	East	Unknown	Asphalt	Good	No	Granite	Good	No	2.0000000000	Grass Strip	None	36 inches to 60 inches	Unlimited	Level	No	5.0	Less than or equal to 2%	1.0	1.0	10	94
9106	0	3/18/2016	Sandt DOT	Plaistow	Rt 125	West	Unknown	Asphalt	Good	No	Granite	Good	No	1.0000000000	None	None	36 inches to 60 inches	Unlimited	Level	No	2.0	Less than or equal to 2%	4.0	1.0	10	94
9108	0	3/18/2016	Sandt DOT	Plaistow	Rt 125	East	Unknown	Asphalt	Good	No	Granite	Good	No	5.0000000000	None	None	36 inches to 60 inches	Unlimited	Level	No	4.0	Less than or equal to 2%	0.0	1.0	10	94
9109	0	3/18/2016	Sandt DOT	Plaistow	Rt 125	East	Unknown	Asphalt	Good	No	Granite	Good	No	5.0000000000	None	None	36 inches to 60 inches	Unlimited	Level	No	7.0	Less than or equal to 2%	5.0	1.0	10	94
9112	0	3/18/2016	Sandt DOT	Plaistow	Rt 125	East	Unknown	Asphalt	Good	No	Granite	Good	No	5.0000000000	Grass Strip	None	36 inches to 60 inches	Unlimited	Level	No	1.0	Less than or equal to 2%	0.0	1.0	10	94
9113	0	3/18/2016	Sandt DOT	Plaistow	Rt 125	East	Unknown	Asphalt	Good	No	Granite	Good	No	5.0000000000	None	None	36 inches to 60 inches	Unlimited	Level	No	3.0	Less than or equal to 2%	0.0	1.0	10	94
10112	0	3/18/2016	Sandt DOT	Plaistow	Rt 125	West	Unknown	Asphalt	Good	No	Granite	Good	No	6.0000000000	None	None	36 inches to 60 inches	Unlimited	Level	No	3.0	Less than or equal to 2%	0.0	1.0	10	94
10120	0	3/30/2016	Sandt DOT	Plaistow	Kingston Road	West	Unknown	Asphalt	Good	No	Granite	Good	No	6.0000000000	None	None	36 inches to 60 inches	Unlimited	Level	No	5.0	Less than or equal to 2%	1.0	1.0	10	94
10122	0	3/30/2016	Sandt DOT	Plaistow	Kingston Road	West	Unknown	Asphalt	Good	No	Granite	Good	No	4.0000000000	None	None	36 inches to 60 inches	Unlimited	Level	No	5.0	Less than or equal to 2%	0.0	1.0	10	94
414	859	4/30/2015	Srpc tom	Newmarket	108	West		Concrete	Good	No	Granite	Good	No	7.0	Grass Strip	None	Greater than 60 inches	Unlimited	Less than 0.25 inches	No	5.0	Less than or equal to 2%	0.0	1.0	8	95
4830	41803	10/16/2015	Sandt DOT	Concord	Manchester Street slip road	South	Unknown	Concrete	Good	No	None	N/A	No	0.0	None	None	Greater than 60 inches	Unlimited	Less than 0.25 inches	No	6.0	Less than or equal to 2%	0.0	1.0	8	95
4967	42782	10/29/2015	Sandt DOT	Hampton	Ocean Blvd	East	Unknown	Concrete	Good	No	Granite	Good	No	3.0	Parking spaces.	Moveable Objects	Greater than 60 inches	Unlimited	Level	No	1.0	Less than or equal to 2%	3.0	1.0	8	95
572	2071	6/26/2015	MC SWRPC	North Walpole	Church Street	West	Unknown	Concrete	Good	No	Granite	Fair	No	4.5	None	None	Greater than 60 inches	Greater than 80 inches	Level	No	4.0	Less than or equal to 2%	0.0	1.0	7	96
627	2126	6/30/2015	NM SWRPC	North Walpole	Arch bridge	Southeast		Concrete	Good	No	Granite	Good	Yes	7.0	None	None	Greater than 60 inches	Greater than 80 inches	Level	No	4.0	Less than or equal to 2%	0.0	1.0	7	96
4765	41738	10/8/2015	Sandt DOT	Durham	Main Street	North	Unknown	Concrete	Good	No	Granite	Good	No	6.0	Bicycle Lane	None	Greater than 60 inches	Greater than 80 inches	Level	No	8.0	Less than or equal to 2%	3.0	1.0	7	96
4993	42808	11/2/2015	Milefendy district one	Colebrook	Rte26	North	Unknown	Concrete	Good	No	None	N/A	No	0.0	Parking Spaces	None	Greater than 60 inches	Greater than 80 inches	Level	No	1.0	Less than or equal to 2%	0.0	1.0	7	96
5107	0	11/10/2015	NM SWRPC	Hinsdale	Main St	North	Town/City	Concrete	Good	No	Granite	Good	No	0.0	None	None	Greater than 60 inches	Greater than 80 inches	Level	No	0.0	Less than or equal to 2%	0.0	1.0	7	96
5109	0	11/10/2015	NM SWRPC	Hinsdale	Main St	North	Town/City	Concrete	Good	No	Granite	Good	No	4.0	None	None	Greater than 60 inches	Greater than 80 inches	Level	No	6.3	Less than or equal to 2%	5.0	1.0	7	96
6207	0	12/1/2015	Wilkinson District 1	Errol	Rte. 26	South-West	Unknown	Concrete	Good	No	Granite	Good	No	6.0	Bicycle Lane	None	Greater than 60 inches	Greater than 80 inches	Level	No	3.0	Less than or equal to 2%	0.0	1.0	7	96
6307	0	12/7/2015	Wilkinson District 1	Jefferson	Rte. 2	North	Unknown	Concrete	Good	No	Granite	Good	No	1.0	Bicycle Lane	None	Greater than 60 inches	Greater than 80 inches	Level	No	2.0	Less than or equal to 2%	1.0	1.0	7	96
6651	0	12/17/2015	Sandt DOT	Tilton	Rt 132	South-East	Unknown	Concrete	Good	No	Granite	Good	No	5.0	None	None	Greater than 60 inches	Greater than 80 inches	Level	No	1.0	Less than or equal to 2%	0.0	1.0	7	96
6695	0	12/23/2015	NM SWRPC	Hinsdale	High St	West	Unknown	Concrete	Good	No	Concrete	Good	Yes	0.0	Grass Strip	None	Greater than 60 inches	Greater than 80 inches	Level	No	5.0	Less than or equal to 2%	9.0	1.0	7	96
1	1	10/24/2014	Unh t2	Durham	McDaniel drive	Southeast	Other	Concrete	Good	No	Granite	Good	No	0.0	Other	None	Greater than 60 inches	Unlimited	Level	No	0.0	Less than or equal to 2%	0.0	1.0	4	98
2	2	10/24/2014	Unh t2	Durham	McDaniel dr	Southeast	Other	Concrete	Good	No	Granite	Good	No	0.0	Grass Strip	None	Greater than 60 inches	Unlimited	Level	No	0.0	Less than or equal to 2%	0.0	1.0	4	98
3	3	10/24/2014	Unh t2	Durham	McDaniel	Southwest	Other	Concrete	Good	No	Granite	Good	No	0.0	Grass Strip	None	Greater than 60 inches	Unlimited	Level	No	0.0	Less than or equal to 2%	0.0	1.0	4	98
418	863	4/30/2015	Srpc tom	Newmarket	108	East		Concrete	Good	No	None	N/A	No	5.0	None	None	Greater than 60 inches	Unlimited	Level	No	0.0	Less than or equal to 2%	0.0	1.0	4	98
4490	41463	9/3/2015	Sandt DOT	Keene	Rt 10-Rt 101	South	Unknown	Concrete	Good	No	Granite	Good	No	5.0	Grass Strip	None	Greater than 60 inches	Unlimited	Level	No	1.0	Less than or equal to 2%	0.0	1.0	4	98
4492	41465	9/3/2015	Sandt DOT	Keene	Rt 10-Rt 101	Northwest	Unknown	Concrete	Good	No	Granite	Good	No	5.0	Grass Strip	None	Greater than 60 inches	Unlimited	Level	No	1.0	Less than or equal to 2%	0.0	1.0	4	98
4493	41466	9/3/2015	Sandt DOT	Keene	Rt 10-Rt 101	Northeast	Unknown	Concrete	Good	No	Granite	Good	No	5.0	Grass Strip	None	Greater than 60 inches	Unlimited	Level	No	1.0	Less than or equal to 2%	0.0	1.0	4	98
4507	41480	9/14/2015	Sandt DOT	Charlestown	Church Street	North	Unknown	Concrete	Good	No	Concrete	Good	No	6.0	None	None	Greater than 60 inches	Unlimited	Level	No	4.0	Less than or equal to 2%	1.0	1.0	4	98
4666	41639	9/29/2015	Sandt DOT	Durham	Main Street	North	Town/City	Concrete	Good	No	Granite	Good	No	7.0	Bicycle Lane	None	Greater than 60 inches	Unlimited	Level	No	6.0	Less than or equal to 2%	0.0	1.0	4	98
4667	41640	9/29/2015	Sandt DOT	Durham	Main Street	North	Unknown	Concrete	Good	No	Granite	Good	No	7.0	Bicycle Lane	None	Greater than 60 inches	Unlimited	Level	No	5.0	Less than or equal to 2%	0.0	1.0	4	98
4734	41707	10/6/2015	Sandt DOT	Dover	Littleworth Road	Northeast	Unknown	Concrete	Good	No	Granite	Good	No	6.0	None	None	Greater than 60 inches	Unlimited	Level	No	1.0	Less than or equal to 2%	0.0	1.0	4	98
4787	41760	10/12/2015	Sandt DOT	Rye	Elwyn	South	Unknown	Concrete	Good	No	Granite	Good	No	3.0	None	None	Greater than 60 inches	Unlimited	Level	No	7.0	Less than or equal to 2%	2.0	1.0	4	98
4788	41761	10/12/2015	Sandt DOT	Rye	Sagamore Road	East	Unknown	Concrete	Good	No	Granite	Good	No	3.0	None	None	Greater than 60 inches	Unlimited	Level	No	7.0	Less than or equal to 2%	2.0	1.0	4	98
4789	41762	10/12/2015	Sandt DOT	Rye	Pioneer Road	North	Unknown	Concrete	Good	No	Granite	Good	No	3.0	None	None	Greater than 60 inches	Unlimited	Level	No	7.0	Less than or equal to 2%	2.0	1.0	4	98
4790	41763	10/12/2015	Sandt DOT	Rye	Rt 1A	West	Unknown	Concrete	Good	No	Granite	Good	No	3.0	None	None	Greater than 60 inches	Unlimited	Level	No	7.0	Less than or equal to 2%	2.0	1.0	4	98
4798	41771	10/14/2015	Sandt DOT	Portsmouth	Rt 1	Southeast	Unknown	Concrete	Good	No	Granite	Good	No	8.0	Grass Strip	None	Greater than 60 inches	Unlimited	Level	No	1.0	Less than or equal to 2%	0.0	1.0	4	98
4831	41804	10/16/2015	Sandt DOT	Concord	Manchester Street slip road	South	Unknown	Asphalt	Good	No	None	N/A	No	0.0	None	None	Greater than 60 inches	Unlimited	Less than 0.25 inches	No	3.0	Less than or equal to 2%	0.0	1.0	4	98
4908	42721	10/28/2015	Sandt DOT	North Hampton	Ocean Blvd	East	Unknown	Concrete	Good	No	Granite	Good	No	3.0	None	None	Greater than 60 inches	Unlimited	Level	No	8.0	Less than or equal to 2%	1.0	1.0	4	98
5045	42940	10/29/2015	Sandt DOT	Hampton	Ocean Blvd	East	Unknown	Concrete	Good	No	Granite	Good	No	3.0	Parking spaces	None	Greater than 60 inches	Unlimited	Level	No	1.0	Less than or equal to 2%	0.0	1.0	4	98
5058	42953	11/2/2015	Sandt DOT	Hampton	Ocean Blvd	East	Unknown	Concrete	Good	No	Granite	Good	No	3.0	Parking spaces.	None	Greater than 60 inches	Unlimited	Level	No	1.0	Less than or equal to 2%	0.0	1.0	4	98
5201	0	11/20/2015	Sandt DOT	Wolfeboro	Rt 109	North	Unknown	Concrete	Good	No	Granite	Good	No	5.0	Grass Strip	None	Greater than 60 inches	Unlimited	Level	No	7.0	Less than or equal to 2%	3.0	1.0	4	98
7917	42939	10/29/2015	Sandt DOT	Hampton	Ocean Blvd	East	Unknown	Concrete	Good	No	Granite	Good	No	3.0	Parking spaces.	None	Greater than 60 inches	Unlimited	Level	No	1.0	Less than or equal to 2%	0.0	1.0	4	98
565	2064	6/26/2015	Sandt DOT	Manchester	2nd	Southeast	Unknown	Asphalt	Good	No	Asphalt	Good	No	3.0	None	None	Greater than 60 inches	Greater than 80 inches	Level	No	0.0	Less than or equal to 2%	1.0	1.0	3	98
4736	41709	10/6/2015	Sandt DOT	Dover	Littleworth Road	Northeast	Unknown	Asphalt	Good	No	Granite	Good	No	6.0	None	None	Greater than 60 inches	Greater than 80 inches	Level	No	2.0	Less than or equal to 2%	1.0	1.0	3	98
5108	0	11/10/2015	NM SWRPC	Hinsdale	Main St	South	Unknown	Asphalt	Good	No	Granite	Good	No	0.0	None	None	Greater than 60 inches	Greater than 80 inches	Level	No	4.0	Less than or equal to 2%	1.0	1.0	3	98
6455	0	12/10/2015	Sandt DOT	Laconia	Rt 3	South	Unknown	Asphalt	Good	No	Granite	Good	No	5.0	None	None	Greater than 60 inches	Greater than 80 inches	Level	No	2.0	Less than or equal to 2%	0.0	1.0	3	98
6456	0	12/10/2015	Sandt DOT	Laconia	Rt 3	North	Unknown	Asphalt	Good	No	Granite	Good	No	5.0	None	None	Greater than 60 inches	Greater than 80 inches	Level	No	5.0	Less than or equal to 2%	0.0	1.0	3	98
9034	0	3/11/2016	Sandt DOT	Londonderry	Exit 5 Park n Ride	North	Unknown	Asphalt	Good	No	None	Good	No	0.0000000000	Grass Strip	None	Greater than 60 inches	Unlimited	Level	No	5.0	Less than or equal to 2%	0.0	1.0	3	98
9035	0	3/11/2016	Sandt DOT	Londonderry	Exit 5 Park n Ride	North	Unkn

OBJECTID	Asse_Date	Collectors	Line Type	Surface Material	Paint Type	Crosswalk Faded	Median Present	Speed Humps Present	Lighting Present	Ped Utilities Present	Width	Cross Slope	Running Slope	Importance	Ranking	Normalized Ranking percentage	OBJECTID	POINT_X	POINT_Y
1	10/24/2014	Unh t2	Hatched	Asphalt	Flat	No	No	No	No	No	0	0	0	1	32	58	1	-70.93615913450	43.13432763310
2	10/24/2014	Unh t2	Hatched	Asphalt	Flat	No	No	No	Yes	No	0	0	0	1	31	59	2	-70.93647478880	43.13469061020
3	10/24/2014	Unh t2	Hatched	Asphalt	Flat	No	No	No	Yes	No	0	0	0	1	31	59	3	-70.93651961780	43.13463492960
4	10/30/2014	Srpc Tom brown	Hatched	Asphalt	Flat	No	No	No	No	No	84	2	1	1	7	92	4	-70.98134212210	43.31651782680
5	10/30/2014	Srpc Tom brown	Hatched	Asphalt	Flat	Yes	No	No	No	No	78	3	1	1	37	51	5	-70.97854961150	43.31592727020
81	6/12/2015	Sandt DOT	Parallel	Asphalt	Flat	Yes	No	No	Yes	No	70	0	0	1	53	29	81	-71.51784549520	43.21464770460
83	6/12/2015	Sandt DOT	Parallel	Asphalt	Flat	Yes	No	No	Yes	No	70	1	2	1	53	29	83	-71.52062154560	43.21302290830
84	6/12/2015	Sandt DOT	Parallel	Asphalt	Flat	Yes	No	No	Yes	No	66	0	0	1	53	29	84	-71.52096442900	43.21266847570
85	6/12/2015	Sandt DOT	Parallel	Asphalt	Flat	Yes	No	No	Yes	No	0	0	0	1	53	29	85	-71.51942219290	43.21219243010
86	6/12/2015	Sandt DOT	Parallel	Asphalt	Flat	Yes	No	No	Yes	No	71	2	2	1	53	29	86	-71.51940011090	43.21206039140
87	6/12/2015	Sandt DOT	Parallel	Asphalt	Flat	Yes	No	No	Yes	No	60	0	6	1	63	15	87	-71.52078578840	43.21135539500
88	6/12/2015	Sandt DOT	Parallel	Asphalt	Flat	Yes	No	No	No	No	69	0	2	1	54	27	88	-71.51833182180	43.21294104610
89			Parallel	Asphalt	Flat	Yes	Yes	No	Yes	No	76	0	0	1	27	64	89	-70.92502258840	43.13496397710
91	6/15/2015	Sandt DOT	Parallel	Asphalt	Flat	Yes	No	No	Yes	Yes	72	1	0	1	51	32	91	-71.45757404250	43.14681594240
92	6/16/2015	Sandt DOT	Parallel	Asphalt	Flat	Yes	No	No	Yes	Yes	84	0	4	1	26	66	92	-71.45322486200	43.14203120070
93	6/16/2015	Sandt DOT	Parallel	Asphalt	None	No	No	No	Yes	No	96	4	0	1	18	77	93	-71.45263496800	43.13430240480
94	6/17/2015	Sandt DOT	Parallel	Asphalt	Retroreflective	Yes	No	No	Yes	No	96	1	0	1	26	66	94	-71.45227680870	43.13281018720
95	6/17/2015	Sandt DOT	Parallel	Asphalt	Retroreflective	Yes	No	No	Yes	No	96	4	0	1	36	52	95	-71.45244645940	43.13359865100
96	6/17/2015	Sandt DOT	Parallel	Concrete	Flat	Yes	No	No	Yes	No	108	5	1	1	40	47	96	-71.45201185710	43.13209678220
97	6/17/2015	Sandt DOT	Parallel Filled	Asphalt	Flat	Yes	No	No	Yes	No	66	0	9	1	63	15	97	-71.45156317380	43.13212234620
98	6/17/2015	Sandt DOT	Parallel Filled	Asphalt	Flat	Yes	No	No	No	No	84	0	9	1	39	48	98	-71.45269640730	43.13158145250
99	6/17/2015	Sandt DOT	Parallel Filled	Asphalt	Flat	Yes	No	No	Yes	No	96	10	3	1	38	49	99	-71.45262197540	43.13152321850
100	6/17/2015	Sandt DOT	Parallel Filled	Asphalt	Flat	Yes	No	No	Yes	No	96	0	5	1	28	63	100	-71.45250119320	43.13156229250
101	6/17/2015	Sandt DOT	Parallel Filled	Asphalt	Flat	Yes	No	No	No	No	84	3	2	1	39	48	101	-71.45257495330	43.13163373880
102	6/17/2015	Sandt DOT	Parallel Filled	Asphalt	Flat	Yes	No	No	Yes	No	86	8	2	1	38	49	102	-71.45281668720	43.13084571640
103	6/17/2015	Sandt DOT	Parallel Filled	Asphalt	Flat	Yes	No	No	Yes	No	88	3	10	1	48	36	103	-71.45294802270	43.13083241530
104	6/17/2015		Parallel Filled	Asphalt	Flat	Yes	No	No	Yes	No	88	10	1	1	38	49	104	-71.45287519310	43.13073001320
105	6/17/2015	Sandt DOT	Parallel Filled	Asphalt	Flat	Yes	No	No	Yes	No	100	2	5	1	28	63	105	-71.45274426830	43.13074843100
106	6/17/2015	Sandt DOT	Hatched	Asphalt	Flat	Yes	No	No	Yes	Yes	84	1	2	1	24	68	106	-71.45449056140	43.12694391440
107	6/17/2015	Sandt DOT	Hatched	Asphalt	Flat	Yes	No	No	Yes	No	84	6	3	1	36	52	107	-71.45466223270	43.12534736500
108	6/17/2015	Sandt DOT	Hatched	Asphalt	Flat	Yes	No	No	Yes	Yes	72	0	7	1	59	21	108	-71.45483289360	43.12444814640
109	6/17/2015	Sandt DOT	Hatched	Asphalt	Flat	Yes	No	No	No	No	54	6	0	1	62	16	109	-71.45490193770	43.12467649100
110	6/17/2015	Sandt DOT	Hatched	Asphalt	Flat	Yes	No	No	No	No	60	3	1	1	62	16	110	-71.45488509000	43.12502847150
111	6/22/2015	Sandt DOT	Hatched	Asphalt	Flat	Yes	No	No	No	No	72	1	1	1	52	30	111	-71.45478431160	43.12595824350
112	6/22/2015	Sandt DOT	Hatched	Asphalt	Flat	Yes	No	No	No	No	78	1	1	1	27	64	112	-71.45472333130	43.12662377810
113	6/22/2015	Sandt DOT	Hatched	Asphalt	Flat	Yes	No	No	Yes	Yes	72	4	5	1	59	21	113	-71.45457722260	43.12699305130
114	6/22/2015	Sandt DOT	Hatched	Asphalt	Flat	Yes	No	No	Yes	Yes	72	2	7	1	59	21	114	-71.45468316960	43.12704884230
115	6/22/2015	Sandt DOT	Parallel	Asphalt	Flat	Yes	No	No	No	Yes	72	1	3	1	52	30	115	-71.46677021660	43.09843186150
116	6/22/2015	Sandt DOT	Parallel	Asphalt	Flat	Yes	No	No	Yes	No	72	0	1	1	53	29	116	-71.46624929630	43.09835644570
117	6/22/2015	Sandt DOT	Parallel	Asphalt	Flat	Yes	No	No	No	Yes	64	0	1	1	52	30	117	-71.46261210600	43.09379156920
118			Parallel	Asphalt	Flat	Yes	No	No	Yes	Yes	54	0	1	1	51	32	118	-71.46136246120	43.09364705830
119	6/22/2015	Sandt DOT	Hatched	Asphalt	Flat	No	No	No	Yes	Yes	108	0	0	1	4	96	119	-71.47714845520	43.10911940840
120	6/22/2015	Sandt DOT	Hatched	Asphalt	Flat	No	No	No	Yes	Yes	96	0	0	1	4	96	120	-71.47720584280	43.10827915800
121	6/23/2015	Sandt DOT	Parallel	Asphalt	Flat	Yes	Yes	No	Yes	Yes	72	1	2	1	50	33	121	-71.43875814590	43.05308537270
122	6/23/2015	Sandt DOT	Parallel	Asphalt	Retroreflective	No	No	No	Yes	Yes	80	0	0	1	4	96	122	-71.43723677500	43.05071295410
123	6/23/2015	MC SWRPC	Hatched	Asphalt	Flat	No	No	No	No	No	72	1	5	1	32	58	123	-72.44620324150	43.14062212540
124	6/23/2015	MC SWRPC	Hatched	Asphalt	Flat	No	No	No	Yes	No	72	10	2	1	41	45	124	-72.44781084880	43.14227812940
125	6/23/2015	MC SWRPC	Hatched	Asphalt	Flat	No	No	No	No	No	72	0	1	1	32	58	125	-72.44828645650	43.14198808550
126	6/23/2015	MC SWRPC	Hatched	Asphalt	Flat	No	No	No	Yes	No	72	0	4	1	31	59	126	-72.44787245750	43.14228965510
127	6/24/2015	Sandt DOT	Parallel	Asphalt	Flat	Yes	No	No	No	Yes	84	1	0	1	27	64	127	-71.43924199180	43.02821331070
128	6/24/2015	Sandt DOT	Hatched	Asphalt	None	Yes	Yes	No	Yes	Yes	0	3	4	1	58	22	128	-71.44885729000	43.01827751260
129	6/24/2015	Sandt DOT	Parallel	Asphalt	Flat	Yes	Yes	No	No	Yes	84	0	1	1	26	66	129	-71.43951008070	43.02826502520
1092	6/25/2015	Sandt DOT	Parallel	Asphalt	Flat	No	Yes	No	Yes	Yes	64	0	1	1	30	60	1092	-71.46677741810	43.04261553620
1093	6/25/2015	Sandt DOT	Parallel	Asphalt	Flat	No	Yes	No	Yes	Yes	64	0	0	1	30	60	1093	-71.46660550530	43.04272820970
1094	6/26/2015	Sandt DOT	Hatched	Asphalt	Flat	Yes	No	No	Yes	Yes	96	4	6	1	44	41	1094	-71.45318976620	43.01222899300
1095	6/26/2015	Sandt DOT	Hatched	Asphalt	Flat	Yes	No	No	Yes	Yes	96	1	1	1	24	68	1095	-71.45326805250	43.01233452310
1096	6/26/2015	Sandt DOT	Hatched	Asphalt	Flat	Yes	No	No	Yes	Yes	96	0	2	1	24	68	1096	-71.45342228030	43.01230755590
1097	6/26/2015	Sandt DOT	Hatched	Asphalt	Flat	Yes	No	No	Yes	Yes	96	1	4	1	24	68	1097	-71.45332566710	43.01217680070
1098	6/26/2015	Sandt DOT	Hatched	Asphalt	Flat	Yes	No	No	Yes	Yes	96	0	2	1	24	68	1098	-71.44908465130	43.01829208140
1099	6/26/2015	Sandt DOT	Hatched	Asphalt	Flat	Yes	No	No	Yes	No	72	0	0	1	51	32	1099	-71.47486541300	43.00543241460
1100	6/26/2015	MC SWRPC	Hatched	Asphalt	Flat	No	No	No	No	No	72	2	2	1	32	58	1100	-72.44962100530	43.14424192430
1101	6/26/2015	MC SWRPC	Hatched	Asphalt	Flat	Yes	No	No	No	No	72	3	0	1	62	16	1101	-72.45029471290	43.14409958180
1102	6/29/2015	Sandt DOT	Parallel	Asphalt	Flat	No	Yes	No	Yes	Yes	132	0	0	1	5	95	1102	-70.80864529130	43.08800761930
1103	6/29/2015	Sandt DOT	Parallel	Concrete	Flat	Yes	Yes	No	Yes	Yes	132	0	2	1	27	64	1103	-70.80831020990	43.08799700390
1104	6/30/2015	Sandt DOT	Hatched	Asphalt	Flat	Yes	No	No	Yes	No	96	5	2	1	36	52	1104	-71.47473504860	42.97605920540
1105	6/30/2015	Sandt DOT	Hatched	Asphalt	Flat	Yes	No	No	Yes	No	96	0	0	1	26	66	1105	-71.47434510260	42.97670207550
1106	6/30/2015	Sandt DOT	Hatched	Brick	Flat	Yes	No	No	Yes	Yes	96	5	2	1	40	47	1106	-71.47411627700	42.97714352330
1107	6/30/2015	Sandt DOT	Hatched	Asphalt	Flat	Yes	No	No	Yes	Yes	96	0	4	1	24	68	1107	-71.47395869740	42.97713812610
1108	6/30/2015	Sandt DOT	Hatched	Asphalt	Flat	Yes	No	No	Yes	Yes	96	0	0	1	24	68	1108	-71.47392248760	42.97693354830
1109	6/30/2015	Sandt DOT	Hatched	Asphalt	Flat	Yes	No	No	Yes	Yes	96	1	1	1	24	68	1109	-71.47406598550	42.97694237930
1110	6/30/2015	Sandt DOT	Hatched	Asphalt	Flat	Yes	No	No	Yes	No	96	0	0	1	26	66	1110	-71.47456789390	42.97592647980
1111	6/30/2015	Sandt DOT	Hatched	Asphalt	Flat	Yes	No	No	Yes	No	96	0	3	1	26	66	1111	-71.47460385210	42.97579976020
1112	6/30/2015	Sandt DOT	Hatched	Asphalt	Flat	Yes	Yes	No	Yes	Yes	96	0	3	1	23	70	1112	-71.47501037430	42.97544674860
1113	6/30/2015	Sandt DOT	Hatched	Asphalt	Flat	Yes	No	No	No	Yes	96	0	2	1	25	67	1113	-71.42736620060	42.98766398480
1114	7/2/2015	Sandt DOT	Hatched	Asphalt	Flat	No	No	No	Yes	Yes	96	0	4	1	4	96	1114	-71.42966222600	42.98790982120
1115	7/2/2015	Sandt DOT	Hatched	Asphalt	Flat	Yes	No	No	Yes	Yes	84	0	3	1	24	68	1115	-71.42047050390	42.98715522060
1116	7/2/2015	Sandt DOT	Hatched	Asphalt	Flat	Yes	No	No	Yes	Yes	84	0	3	1	24	68	1116	-71.42047720790	42.98731700460
1117	7/2/2015	Sandt DOT	Hatched	Asphalt	Flat	Yes	No	No	Yes	Yes	96	3	0	1	34	55	1117	-71.42040998700	42.98723255000
1118	7/2/2015	Sandt DOT	Hatched	Asphalt	Flat	Yes	No	No	Yes	Yes	96	3	0	1	34	55	1118	-71.42056957840	42.98723500240
1119	7/2/2015	Sandt DOT	Hatched	Asphalt	Flat	Yes	No	No	Yes	Yes	96	0	0	1	24	68	1119	-71.41935210010	42.98712638970
1120	7/2/2015	Sandt DOT	Hatched	Asphalt	Flat	Yes	No	No	Yes	Yes	96	0	3	1	24	68	1120	-71.41918781470	42.98720830530
1121	7/2/2015	Sandt DOT	Hatched	Asphalt	Flat	Yes	No	No	Yes	Yes	96	0	3	1	24	68	1121	-71.41926437420	42.98725882780
1122	7/2/2015	Sandt DOT	Parallel Filled	Asphalt	Flat	Yes	No	No	No	Yes	84	0	0	1	27	64	1122	-71.41667913330	42.98764879640
1124	7/2/2015	Sandt DOT	Parallel Filled	Asphalt	Flat	Yes	No	No	Yes	Yes	84	0	0	1	26	66	1124	-71.41507716870	42.98793220140
1125	7/2/2015	Sandt DOT	Parallel Filled	Asphalt	Flat	Yes	No	No	Yes	Yes	84	0	0	1	26	66	1125	-71.41506786460	42.98778681040
1126	7/2/2015	Sandt DOT	Hatched	Asphalt	Flat	Yes	Yes	No	Yes	Yes	104	0	1	1	23	70	1126	-71.41494113070	42.98789472220
1127	7/2/2015	Sandt DOT	Parallel Filled	Asphalt	Flat	Yes	No	No	No	Yes	84	0	0	1	27	64	1127	-71.41666702520	42.98745293300
1128	7/2/2015	Sandt DOT	Parallel	Asphalt	Flat	Yes	No	No	Yes	Yes	80	0	0	1	26	66	1128	-71.39466164570	43.00630073260

1129	7/2/2015 Sandt DOT	Parallel	Asphalt	Flat	Yes	No	No	No	Yes	80	0	0	1	27	64	1129	-71.39518087740	43.00702505250
1130	7/2/2015 Sandt DOT	Parallel	Asphalt	Flat	Yes	No	No	Yes	No	76	0	2	1	28	63	1130	-71.39414856160	43.00561087190
1131	7/6/2015 Sandt DOT	Parallel	Asphalt	Flat	Yes	No	No	Yes	No	96	0	3	1	28	63	1131	-71.43462917740	42.95041614130
1132	7/6/2015 Sandt DOT	Hatched	Asphalt	Flat	Yes	Yes	No	Yes	Yes	96	0	2	1	23	70	1132	-71.43415823570	42.94970590680
1133	7/6/2015 Sandt DOT	Hatched	Asphalt	Flat	Yes	Yes	No	Yes	No	96	0	1	1	25	67	1133	-71.43362573370	42.94844229930
1134	7/6/2015 Sandt DOT	Hatched	Asphalt	Flat	Yes	Yes	No	Yes	Yes	96	0	5	1	23	70	1134	-71.43273431930	42.94624210080
1135	7/6/2015 Sandt DOT	Hatched	Asphalt	Flat	Yes	No	No	Yes	Yes	96	0	4	1	24	68	1135	-71.43292006120	42.94611457760
1136	7/6/2015 Sandt DOT	Hatched	Asphalt	Flat	Yes	No	No	Yes	Yes	96	0	4	1	24	68	1136	-71.43279533830	42.94586572090
1137	7/6/2015 Sandt DOT	Hatched	Asphalt	Flat	Yes	No	No	Yes	Yes	96	0	4	1	24	68	1137	-71.43261014030	42.94588860680
1138	7/6/2015 Sandt DOT	Hatched	Asphalt	Flat	Yes	No	No	No	No	96	0	0	1	27	64	1138	-71.43224682640	42.94576662120
1139	7/6/2015 Sandt DOT	Parallel	Asphalt	Flat	Yes	No	No	No	No	96	1	2	1	29	62	1139	-71.43129862380	42.94559335380
1140	7/6/2015 Sandt DOT	Parallel	Asphalt	Flat	Yes	Yes	No	Yes	Yes	68	1	2	1	50	33	1140	-71.46701954360	42.93976144800
1141	7/7/2015 Sandt DOT	Parallel	Asphalt	Flat	Yes	No	No	Yes	No	84	3	6	1	48	36	1141	-71.53804119680	43.23688332730
1142	7/7/2015 Sandt DOT	Hatched	Asphalt	Flat	Yes	No	No	Yes	No	60	0	0	1	51	32	1142	-71.54025984430	43.23494375450
1143	7/8/2015 Sandt DOT	Parallel Filled	Asphalt	Flat	Yes	No	No	Yes	No	96	0	0	1	28	63	1143	-71.87249786710	44.32671903860
1144	7/9/2015 Sandt DOT	Parallel	Asphalt	Flat	Yes	No	No	No	No	80	0	0	1	29	62	1144	-71.45959664150	42.91855021150
1145	7/9/2015 Sandt DOT	Parallel	Asphalt	Flat	Yes	No	No	Yes	Yes	84	1	3	1	26	66	1145	-71.46004859390	42.91620895760
1146	7/9/2015 Sandt DOT	Parallel	Asphalt	Flat	Yes	No	No	Yes	Yes	84	2	0	1	26	66	1146	-71.45991967990	42.91601971520
1147	7/9/2015 Sandt DOT	Parallel	Asphalt	Flat	Yes	No	No	No	No	84	0	0	1	29	62	1147	-71.45943872640	42.91340353430
1148	7/9/2015 Sandt DOT	Parallel	Asphalt	Flat	Yes	No	No	No	No	84	0	0	1	29	62	1148	-71.45888589800	42.91221259140
1149	7/9/2015 Sandt DOT	Parallel	Asphalt	Flat	Yes	No	No	No	No	84	0	0	1	29	62	1149	-71.45878060860	42.91212740640
1150	7/9/2015 Sandt DOT	Parallel	Asphalt	Flat	Yes	No	No	No	Yes	78	0	6	1	37	51	1150	-71.46025189700	42.90170285820
1151		Parallel	Asphalt	Flat	Yes	No	No	Yes	No	70	0	3	1	53	29	1151	-71.49245282160	42.83949388160
1152	7/9/2015 Sandt DOT	Parallel	Asphalt	Flat	Yes	Yes	No	Yes	No	72	0	0	1	52	30	1152	-71.49082945680	42.82677830440
1153	7/9/2015 Sandt DOT	Parallel	Asphalt	Flat	Yes	Yes	No	Yes	Yes	72	0	0	1	50	33	1153	-71.49069861540	42.82660712460
1154	7/9/2015 Sandt DOT	Parallel	Asphalt	Flat	Yes	Yes	No	Yes	No	72	0	0	1	52	30	1154	-71.49066022630	42.82643303280
1155	7/10/2015 Sandt DOT	Parallel	Asphalt	Flat	Yes	No	No	Yes	No	74	2	4	1	28	63	1155	-71.48842280240	42.82150369920
1156	7/10/2015 Sandt DOT	Parallel	Asphalt	Flat	Yes	No	No	Yes	Yes	84	0	0	1	26	66	1156	-71.48820914820	42.82129911710
1157	7/10/2015 Sandt DOT	Parallel	Asphalt	Flat	Yes	No	No	Yes	Yes	74	2	4	1	26	66	1157	-71.48818559890	42.82097568560
1158	7/10/2015 Sandt DOT	Parallel	Asphalt	Flat	Yes	No	No	No	No	74	2	4	1	29	62	1158	-71.48685827890	42.81892291020
1159	7/10/2015 Sandt DOT	Parallel	Asphalt	Flat	Yes	No	No	No	No	74	0	2	1	29	62	1159	-71.48660244190	42.81873558740
1160	7/10/2015 Sandt DOT	Parallel	Asphalt	Flat	Yes	No	No	No	No	74	2	4	1	29	62	1160	-71.48652928900	42.81852861280
1161	7/10/2015 Sandt DOT	Parallel Filled	Asphalt	Flat	Yes	Yes	No	Yes	Yes	96	2	2	1	25	67	1161	-71.49548334120	42.74635951720
1162	7/10/2015 Sandt DOT	Hatched	Asphalt	Flat	Yes	No	No	Yes	No	60	2	2	1	51	32	1162	-71.49566929320	42.74658341870
1163	7/10/2015 Sandt DOT	Parallel Filled	Asphalt	Flat	Yes	No	No	Yes	No	96	4	2	1	38	49	1163	-71.49010949340	42.74749853430
1164	7/13/2015 Sandt DOT	Parallel Filled	Asphalt	Flat	Yes	No	No	No	Yes	96	2	0	1	27	64	1164	-71.46154455370	42.74064142490
1165	7/13/2015 Sandt DOT	Parallel Filled	Asphalt	Flat	Yes	No	No	No	Yes	96	2	2	1	27	64	1165	-71.46213728020	42.74015472980
1166	7/13/2015 Sandt DOT	Parallel	Asphalt	Flat	Yes	Yes	No	No	Yes	76	0	3	1	26	66	1166	-71.46951101380	42.73457352430
1167	7/13/2015 Sandt DOT	Hatched	Asphalt	Flat	Yes	Yes	No	No	Yes	72	0	2	1	49	34	1167	-71.47043477740	42.73388255850
1168	7/13/2015 Sandt DOT	Hatched	Asphalt	Flat	Yes	Yes	No	No	Yes	72	0	2	1	49	34	1168	-71.47089347720	42.73228682580
1169	7/13/2015 Sandt DOT	Parallel	Asphalt	Flat	Yes	Yes	No	No	Yes	72	2	0	1	51	32	1169	-71.47112196760	42.73160386830
1170	7/13/2015 Sandt DOT	Parallel	Asphalt	Flat	Yes	Yes	No	No	Yes	72	0	2	1	51	32	1170	-71.47097470610	42.73144968580
1171	7/13/2015 Sandt DOT	Parallel	Asphalt	Flat	Yes	Yes	No	No	No	72	0	2	1	53	29	1171	-71.47134589080	42.73071255760
1172	7/13/2015 Sandt DOT	Parallel	Asphalt	Flat	Yes	No	No	Yes	No	72	0	2	1	53	29	1172	-71.47048640990	42.73199159460
1173	7/13/2015 Sandt DOT	Hatched	Asphalt	Flat	Yes	Yes	No	No	Yes	72	2	3	1	49	34	1173	-71.46997394030	42.73390233260
1174	7/13/2015 Sandt DOT	Parallel	Asphalt	Flat	Yes	Yes	No	Yes	Yes	88	3	3	1	35	53	1174	-71.47009966860	42.73398007050
1175	7/13/2015 Sandt DOT	Hatched	Asphalt	Flat	Yes	Yes	No	No	Yes	72	2	3	1	49	34	1175	-71.46977353850	42.73399130730
1176	7/13/2015 Sandt DOT	Parallel Filled	Asphalt	Flat	Yes	No	No	No	Yes	108	0	1	1	27	64	1176	-71.46771769960	42.73535833910
1177	7/13/2015 Sandt DOT	Parallel	Asphalt	Flat	Yes	Yes	No	Yes	Yes	108	2	2	1	25	67	1177	-71.45974446850	42.74210365000
1178	7/13/2015 Sandt DOT	Parallel	Stamped Asphalt	Flat	Yes	Yes	No	No	Yes	108	2	0	1	30	60	1178	-71.45971308670	42.74196031210
1179	7/13/2015 Sandt DOT	Parallel	Stamped Asphalt	Flat	Yes	Yes	No	Yes	No	108	1	1	1	31	59	1179	-71.45903578800	42.73956912970
1180	7/13/2015 Sandt DOT	Parallel	Stamped Asphalt	Flat	Yes	Yes	No	Yes	No	108	1	1	1	31	59	1180	-71.45772831460	42.73763568640
1181	7/13/2015 Sandt DOT	Parallel	Stamped Asphalt	Flat	Yes	Yes	No	Yes	Yes	108	0	1	1	29	62	1181	-71.45845224850	42.73902824190
1182	7/13/2015 Sandt DOT	Parallel	Stamped Asphalt	Flat	Yes	Yes	No	Yes	No	108	1	1	1	31	59	1182	-71.45825399570	42.73859951710
1183	7/14/2015 Sandt DOT	Parallel	Asphalt	Flat	Yes	No	No	Yes	Yes	66	2	3	1	51	32	1183	-71.42517514060	42.73168471200
1184	7/14/2015 Sandt DOT	Parallel	Asphalt	Flat	Yes	No	No	Yes	Yes	96	1	3	1	26	66	1184	-71.42490127450	42.73184612350
1185	7/14/2015 Sandt DOT	Parallel Filled	Asphalt	Flat	No	No	No	Yes	No	78	0	0	1	8	90	1185	-71.42383893950	42.73168668190
1186	7/14/2015 Sandt DOT	Parallel	Asphalt	Flat	Yes	No	No	Yes	No	88	4	0	1	38	49	1186	-71.44096685530	42.78622435190
1187	7/14/2015 Sandt DOT	Parallel	Asphalt	Flat	Yes	No	No	Yes	No	88	4	0	1	38	49	1187	-71.44053904380	42.78741845850
1188	7/14/2015 Sandt DOT	Parallel	Asphalt	Flat	Yes	No	No	No	No	88	4	0	1	39	48	1188	-71.43880973090	42.79080235880
1189	7/14/2015 Sandt DOT	Parallel	Asphalt	Flat	Yes	No	No	Yes	Yes	88	0	4	1	26	66	1189	-71.43889078420	42.79081677580
1190	7/14/2015 Sandt DOT	Parallel	Asphalt	Flat	Yes	No	No	Yes	Yes	88	0	4	1	26	66	1190	-71.43765968380	42.79303071510
1191	7/14/2015 Sandt DOT	Parallel	Asphalt	Flat	Yes	No	No	Yes	No	88	0	4	1	28	63	1191	-71.43691910880	42.79439268410
1192	7/14/2015 Sandt DOT	Parallel	Asphalt	Flat	Yes	No	No	Yes	Yes	88	0	4	1	26	66	1192	-71.43778990500	42.79307555160
1193	7/14/2015 Sandt DOT	Parallel	Asphalt	Flat	Yes	No	No	Yes	No	88	0	4	1	28	63	1193	-71.43902678020	42.79077817690
1194	7/15/2015 Sandt DOT	Parallel	Asphalt	Flat	Yes	No	No	No	No	76	0	2	1	29	62	1194	-71.22058181090	42.75491130070
1195	7/15/2015 Sandt DOT	Parallel	Asphalt	Flat	Yes	No	No	No	No	76	0	2	1	29	62	1195	-71.22055830000	42.75468188820
1196	7/15/2015 Sandt DOT	Parallel	Asphalt	Flat	Yes	Yes	No	No	No	96	2	2	1	28	63	1196	-71.23560691700	42.79212684620
1197	7/15/2015 Sandt DOT	Parallel	Asphalt	Flat	Yes	Yes	No	No	Yes	96	8	0	1	36	52	1197	-71.23552330740	42.79149144820
1198	7/15/2015 Sandt DOT	Parallel	Asphalt	Flat	Yes	Yes	No	Yes	Yes	96	0	0	1	25	67	1198	-71.24905401150	42.81218953390
1199	7/15/2015 Sandt DOT	Parallel	Asphalt	Flat	Yes	No	No	No	Yes	96	0	0	1	27	64	1199	-71.24895385460	42.81198833060
1200	7/15/2015 Sandt DOT	Parallel	Asphalt	Flat	Yes	Yes	No	Yes	Yes	96	0	1	1	25	67	1200	-71.24877199580	42.81213354830
1201	7/15/2015 Sandt DOT	Parallel	Asphalt	Flat	Yes	Yes	No	Yes	Yes	96	0	0	1	25	67	1201	-71.24866788510	42.81242257490
1202	7/15/2015 Sandt DOT	Parallel	Asphalt	Flat	Yes	No	No	Yes	No	96	0	0	1	28	63	1202	-71.24871758290	42.81262770860
1203	7/15/2015 Sandt DOT	Parallel	Asphalt	Flat	Yes	Yes	No	Yes	Yes	96	0	1	1	25	67	1203	-71.24891235750	42.81250647470
1204	7/16/2015 Sandt DOT	Parallel	Asphalt	Flat	Yes	Yes	No	Yes	Yes	80	3	0	1	35	53	1204	-71.25544943870	42.80984390530
1205	7/16/2015 Sandt DOT	Parallel	Asphalt	Flat	Yes	Yes	No	Yes	Yes	80	3	2	1	35	53	1205	-71.25782074410	42.80922781270
1206	7/16/2015 Sandt DOT	Parallel	Asphalt	Flat	Yes	Yes	No	Yes	Yes	80	3	2	1	35	53	1206	-71.25806786170	42.80930937040
1207	7/16/2015 Sandt DOT	Parallel	Asphalt	Flat	Yes	Yes	No	Yes	Yes	80	3	2	1	35	53	1207	-71.25823223090	42.80925078120
1208	7/16/2015 Sandt DOT	Parallel	Asphalt	Flat	Yes	Yes	No	Yes	Yes	80	2	0	1	25	67	1208	-71.26133810270	42.80731638390
1209	7/16/2015 Sandt DOT	Parallel	Asphalt	Flat	Yes	Yes	No	Yes	Yes	96	0	4	1	25	67	1209	-71.26195886650	42.80694183310
1210	7/16/2015 Sandt DOT	Parallel	Asphalt	Flat	Yes	Yes	No	Yes	Yes	93	4	0	1	35	53	1210	-71.25971452810	42.80810107720
1211	7/16/2015 Sandt DOT	Parallel	Asphalt	Flat	Yes	Yes	No	Yes	Yes	80	3	0	1	35	53	1211	-71.25532007310	42.80963169350
1212	7/16/2015 Sandt DOT	Parallel	Asphalt	Flat	Yes	Yes	No	Yes	Yes	80	3	3	1	35	53	1212	-71.25556062450	42.80973697330
1213	7/16/2015 Sandt DOT	Parallel	Asphalt	Flat	Yes	No	No	Yes	Yes	84	2	3	1	26	66	1213	-71.30431308170	42.80105593260
1214	7/16/2015 Sandt DOT	Parallel	Asphalt	Flat	Yes	No	No	Yes	Yes	84	0	3	1	26	66	1214	-71.30432787780	42.80092176770
1215	7/16/2015 Sandt DOT	Parallel	Asphalt	Flat	Yes	No	No	Yes	Yes	72	4	4	1	61	18	1215	-71.32971951300	42.89597250730
1216	7/16/2015 Sandt DOT	Parallel	Asphalt	Flat	Yes	No	No	No	No	76	0	0	1	29	62	1216	-71.33067257750	42.89663381890
1217	7/16/2015 Sandt DOT	Parallel	Asphalt	Flat	Yes	No	No	No	No	76	0	0	1	29	62	1217	-71.33084210140	42.89681455360

1218	7/16/2015	Sandt DOT	Parallel	Asphalt	Flat	Yes	No	No	No	No	76	0	0	1	29	62	1218	-71.33101921100	42.89700515840
1219	7/16/2015	Sandt DOT	Parallel	Asphalt	Flat	Yes	No	No	No	No	76	0	0	1	29	62	1219	-71.33176683440	42.89754910130
1220	7/16/2015	Sandt DOT	Parallel	Asphalt	Flat	Yes	Yes	No	Yes	Yes	72	1	1	1	50	33	1220	-71.33261839320	42.89807399780
1221	7/17/2015	Sandt DOT	Parallel Filled	Asphalt	Flat	No	No	No	Yes	No	84	2	0	1	8	90	1221	-71.32424302890	43.30590201310
1222	7/17/2015	Sandt DOT	Parallel Filled	Asphalt	Flat	No	No	No	Yes	No	72	1	3	1	33	56	1222	-71.32281743420	43.30553142820
1223	7/17/2015	Sandt DOT	Parallel Filled	Asphalt	Flat	No	No	No	No	No	82	6	0	1	19	75	1223	-71.32791937290	43.30518288780
1224	7/17/2015	Sandt DOT	Parallel Filled	Asphalt	Flat	No	No	No	No	No	82	8	6	1	29	62	1224	-71.32898760510	43.30565399280
1225	7/17/2015	Sandt DOT	Parallel Filled	Asphalt	Flat	No	No	No	No	No	82	0	0	1	9	89	1225	-71.32241506180	43.30144807970
1226	7/17/2015	Sandt DOT	Parallel Filled	Asphalt	Flat	No	No	No	Yes	No	84	1	4	1	8	90	1226	-71.32490322920	43.30316718660
1227	7/17/2015	Sandt DOT	Parallel Filled	Asphalt	Flat	No	No	No	No	No	84	1	4	1	9	89	1227	-71.32627547270	43.30412634880
1228	7/17/2015	Sandt DOT	Parallel Filled	Asphalt	Flat	No	No	No	No	No	96	0	0	1	9	89	1228	-71.32630799420	43.30399747720
1229	7/17/2015	Sandt DOT	Parallel Filled	Asphalt	Retroreflective	No	No	No	Yes	No	88	2	2	1	6	93	1229	-71.32548878900	43.30349732910
2145	7/20/2015	Sandt DOT	Parallel	Asphalt	Flat	Yes	Yes	No	Yes	Yes	75	0	4	1	25	67	2145	-71.40423480290	43.24380275020
2146	7/20/2015	Sandt DOT	Parallel	Asphalt	Flat	Yes	Yes	No	Yes	Yes	80	3	0	1	35	53	2146	-71.40433379000	43.24405685270
2147	7/20/2015	Sandt DOT	Parallel	Asphalt	Flat	Yes	Yes	No	Yes	Yes	75	0	4	1	25	67	2147	-71.40458384710	43.24398678110
2148	7/20/2015	Sandt DOT	Parallel	Asphalt	Flat	Yes	Yes	No	Yes	Yes	0	4	1	1	60	19	2148	-71.35085482830	43.22648174530
2149	7/20/2015	Sandt DOT	Parallel	Asphalt	Flat	Yes	No	No	Yes	Yes	0	3	1	1	61	18	2149	-71.34592420590	43.22527292580
2150	7/20/2015	Sandt DOT	Parallel	Asphalt	Flat	Yes	No	No	Yes	Yes	78	0	3	1	26	66	2150	-71.35061807960	43.22630375170
2151	7/21/2015	Sandt DOT	Hatched	Asphalt	Flat	Yes	No	No	No	Yes	84	3	9	1	45	40	2151	-71.37910434540	42.87463978840
2152	7/21/2015	Sandt DOT	Parallel	Asphalt	Flat	Yes	No	No	Yes	No	84	3	4	1	38	49	2152	-71.37714893140	42.87049039040
2153	7/21/2015	Sandt DOT	Parallel	Asphalt	Flat	Yes	No	No	Yes	Yes	84	1	5	1	26	66	2153	-71.37573264110	42.86815259390
2154	7/21/2015	Sandt DOT	Parallel	Asphalt	Flat	Yes	No	No	Yes	Yes	84	1	5	1	26	66	2154	-71.37557367610	42.86793595210
2155	7/21/2015	Sandt DOT	Parallel	Asphalt	Flat	Yes	No	No	Yes	Yes	84	1	1	1	26	66	2155	-71.37555100530	42.86808528700
2156	7/21/2015	Sandt DOT	Parallel	Asphalt	Flat	Yes	No	No	Yes	Yes	84	5	1	1	36	52	2156	-71.37574618280	42.86799278530
2157	7/21/2015	Sandt DOT	Parallel	Asphalt	Flat	Yes	No	No	Yes	Yes	84	4	2	1	36	52	2157	-71.37410169020	42.86480410650
2158	7/21/2015	Sandt DOT	Parallel	Asphalt	Flat	Yes	No	No	Yes	Yes	84	2	5	1	26	66	2158	-71.37393216660	42.86473674610
2159	7/21/2015	Sandt DOT	Parallel	Asphalt	Flat	Yes	No	No	Yes	Yes	84	4	2	1	36	52	2159	-71.37389515950	42.86491389260
2160	7/21/2015	Sandt DOT	Parallel	Asphalt	Flat	Yes	No	No	Yes	Yes	84	2	5	1	26	66	2160	-71.37406091270	42.86498914680
2161	7/22/2015	Sandt DOT	Parallel	Asphalt	Retroreflective	Yes	No	No	Yes	Yes	80	4	2	1	34	55	2161	-71.33963869900	42.87045449260
2162	7/22/2015	Sandt DOT	Parallel	Asphalt	Flat	Yes	Yes	No	Yes	Yes	84	2	1	1	25	67	2162	-71.34332795120	42.86882549320
2163	7/22/2015	Sandt DOT	Parallel	Asphalt	Flat	Yes	Yes	No	Yes	Yes	0	3	2	1	60	19	2163	-71.34325557370	42.86898261150
2164	7/22/2015	Sandt DOT	Parallel	Asphalt	Flat	Yes	Yes	No	Yes	No	84	7	7	1	47	37	2164	-71.34234877800	42.86948908810
2165	7/22/2015	Sandt DOT	Parallel	Asphalt	Flat	Yes	Yes	No	Yes	Yes	84	5	1	1	35	53	2165	-71.33988298950	42.87066169560
2166	7/22/2015	Sandt DOT	Parallel	Asphalt	Flat	Yes	Yes	No	Yes	Yes	84	5	1	1	35	53	2166	-71.33967163960	42.87061316740
2167	7/22/2015	Sandt DOT	Parallel	Asphalt	Flat	Yes	Yes	No	Yes	No	84	5	1	1	37	51	2167	-71.33962746770	42.87086133170
2168	7/22/2015	Sandt DOT	Parallel Filled	Asphalt	Flat	No	No	No	Yes	No	74	0	4	1	8	90	2168	-71.32864444970	42.87953848710
2169	7/22/2015	Sandt DOT	Parallel Filled	Asphalt	Flat	No	No	No	Yes	No	68	4	4	1	43	42	2169	-71.33114498110	42.87821953170
2170	7/22/2015	Sandt DOT	Parallel Filled	Asphalt	Flat	No	No	No	Yes	No	68	4	4	1	43	42	2170	-71.33150749830	42.87796597950
2171	7/22/2015	Sandt DOT	Parallel Filled	Asphalt	Flat	No	No	No	Yes	Yes	96	2	2	1	6	93	2171	-71.33200936520	42.87746669030
2172	7/22/2015	Sandt DOT	Parallel Filled	Asphalt	Flat	No	No	No	Yes	Yes	96	2	5	1	6	93	2172	-71.33196410260	42.87765672870
2173	7/22/2015	Sandt DOT	Parallel Filled	Asphalt	Flat	No	No	No	No	No	80	9	7	1	29	62	2173	-71.33150636680	42.87818589970
2174	7/22/2015	Sandt DOT	Parallel Filled	Asphalt	Flat	Yes	No	No	Yes	No	105	0	0	1	28	63	2174	-71.32330220200	42.88238466710
2175	7/22/2015	Sandt DOT	Parallel Filled	Asphalt	Flat	Yes	No	No	Yes	Yes	105	0	0	1	26	66	2175	-71.32410544030	42.88187521530
2176	7/22/2015	Sandt DOT	Parallel Filled	Asphalt	Flat	Yes	No	No	Yes	No	105	0	0	1	28	63	2176	-71.32500255470	42.88145551210
2177	7/22/2015	Sandt DOT	Parallel Filled	Asphalt	Flat	Yes	No	No	No	No	105	0	0	1	29	62	2177	-71.32585893410	42.88097123450
2178	7/22/2015	Sandt DOT	Parallel Filled	Asphalt	Flat	Yes	No	No	Yes	No	105	0	0	1	28	63	2178	-71.32649227000	42.88063638600
2179	7/22/2015	Sandt DOT	Parallel Filled	Asphalt	Flat	Yes	No	No	Yes	No	105	0	0	1	28	63	2179	-71.32672520330	42.88048818670
2180	7/22/2015	Sandt DOT	Parallel Filled	Asphalt	Flat	Yes	No	No	Yes	No	105	0	0	1	28	63	2180	-71.32768665300	42.87997852560
2181	7/22/2015	Sandt DOT	Parallel Filled	Asphalt	Flat	No	No	No	Yes	No	96	3	3	1	18	77	2181	-71.32845338460	42.87986462630
2182	7/22/2015	Sandt DOT	Parallel Filled	Asphalt	Flat	No	No	No	Yes	No	180	0	3	1	8	90	2182	-71.32802808650	42.87994797960
2183	7/22/2015	Sandt DOT	Parallel Filled	Asphalt	Flat	No	No	No	Yes	No	108	0	3	1	8	90	2183	-71.32733532200	42.88028094790
2184	7/22/2015	Sandt DOT	Parallel Filled	Asphalt	Flat	Yes	No	No	Yes	No	105	5	0	1	38	49	2184	-71.32682704340	42.88066093250
2185	7/23/2015	Sandt DOT	Parallel Filled	Asphalt	Flat	Yes	No	No	Yes	Yes	340	1	1	1	26	66	2185	-71.32643429460	42.88075671810
2186	7/23/2015	Sandt DOT	Parallel Filled	Asphalt	Flat	No	No	No	Yes	No	72	0	3	1	33	56	2186	-71.32629257170	42.88088547060
2187	7/23/2015	Sandt DOT	Parallel Filled	Asphalt	Flat	Yes	No	No	Yes	No	106	0	2	1	28	63	2187	-71.32529416160	42.88134238820
2188	7/23/2015	Sandt DOT	Parallel Filled	Asphalt	Flat	Yes	No	No	Yes	No	106	8	2	1	38	49	2188	-71.32532109080	42.88145111230
2189	7/23/2015	Sandt DOT	Parallel Filled	Asphalt	Flat	Yes	No	No	Yes	No	106	8	2	1	38	49	2189	-71.32473802230	42.88176308370
2190	7/23/2015	Sandt DOT	Parallel Filled	Asphalt	Flat	Yes	No	No	Yes	Yes	105	3	3	1	36	52	2190	-71.32415165110	42.88207390400
2191	7/23/2015	Sandt DOT	Parallel Filled	Asphalt	Flat	Yes	No	No	Yes	Yes	105	0	6	1	36	52	2191	-71.32391896930	42.88209454050
2192	7/23/2015	Sandt DOT	Parallel Filled	Asphalt	Flat	Yes	No	No	Yes	Yes	105	0	6	1	36	52	2192	-71.32432800640	42.88191618010
2193	7/23/2015	Sandt DOT	Parallel Filled	Asphalt	Flat	Yes	No	No	Yes	No	105	0	0	1	28	63	2193	-71.32338576990	42.88245991580
2194	7/23/2015	Sandt DOT	Parallel Filled	Asphalt	Flat	No	No	No	No	No	80	4	4	1	19	75	2194	-71.32239117260	42.88301597910
2195	7/23/2015	Sandt DOT	Parallel Filled	Asphalt	Retroreflective	No	No	No	Yes	No	108	2	2	1	6	93	2195	-71.32243006530	42.88289707390
2196	7/23/2015	Sandt DOT	Parallel Filled	Asphalt	Retroreflective	No	No	No	Yes	No	108	2	2	1	6	93	2196	-71.32222810310	42.88295594790
2197	7/23/2015	Sandt DOT	Parallel Filled	Asphalt	Flat	No	No	No	No	No	82	3	3	1	19	75	2197	-71.31218637370	42.89231559030
2198	7/23/2015	Sandt DOT	Parallel Filled	Asphalt	Flat	No	No	No	No	No	82	3	3	1	19	75	2198	-71.31204599900	42.89236288790
2199	7/23/2015	Sandt DOT	Parallel Filled	Asphalt	Flat	No	No	No	No	No	82	2	4	1	9	89	2199	-71.31186865730	42.89211795990
2200	7/23/2015	Sandt DOT	Parallel Filled	Asphalt	Flat	No	No	No	No	No	72	4	0	1	44	41	2200	-71.31309148280	42.89157026780
2201	7/23/2015	Sandt DOT	Parallel Filled	Asphalt	Flat	No	No	No	No	No	72	0	6	1	44	41	2201	-71.31307270820	42.89151377080
2202	7/23/2015	Sandt DOT	Parallel Filled	Asphalt	Flat	No	No	No	No	No	72	4	0	1	44	41	2202	-71.31457156960	42.89018691900
2203	7/23/2015	Sandt DOT	Parallel Filled	Asphalt	Flat	No	No	No	No	No	72	4	0	1	44	41	2203	-71.31820464440	42.88722420850
2204	7/23/2015	Sandt DOT	Parallel Filled	Asphalt	Flat	No	No	No	No	No	96	0	1	1	9	89	2204	-71.31870263320	42.88682515940
2205	7/23/2015	Sandt DOT	Parallel Filled	Asphalt	Flat	No	No	No	No	No	72	3	3	1	44	41	2205	-71.32141434590	42.88396130340
2206	7/23/2015	Sandt DOT	Parallel Filled	Asphalt	Flat	No	No	No	No	No	72	3	3	1	44	41	2206	-71.32121626500	42.88392696430
2207	7/23/2015	Sandt DOT	Parallel Filled	Asphalt	Flat	No	No	No	No	No	72	3	3	1	44	41	2207	-71.32055919880	42.88502620860
2208	7/23/2015	Sandt DOT	Parallel Filled	Asphalt	Flat	No	No	No	No	No	72	6	6	1	54	27	2208	-71.31999252370	42.88570941850
2209	7/23/2015	Sandt DOT	Parallel Filled	Asphalt	Flat	No	No	No	Yes	No	72	12	0	1	43	42	2209	-71.31964391270	42.88624457430
2210	7/23/2015	Sandt DOT	Parallel Filled	Asphalt	Flat	No	No	No	No	No	120	0	1	1	9	89	2210	-71.30795051340	42.88716124240
2211	7/23/2015	Sandt DOT	Parallel Filled	Asphalt	Flat	No	No	No	No	No	82	0	1	1	9	89	2211	-71.31058798620	42.89050916240
2212	7/23/2015	Sandt DOT	Parallel Filled	Asphalt	Flat	No	No	No	No	No	80	3	3	1	19	75	2212	-71.31174766490	42.89196200470
2213	7/23/2015	Sandt DOT	Parallel Filled	Asphalt	Flat	No	No	No	No	No	80	3	3	1	19	75	2213	-71.31162583380	42.89180735110
2214	7/23/2015	Sandt DOT	Parallel Filled	Asphalt	Flat	No	No	No	No	No	80	3	3	1	19	75	2214	-71.31148547880	42.89164611570
2215	7/23/2015	Sandt DOT	Parallel Filled	Asphalt	Flat	No	No	No	No	Yes	94	2	0	1	7	92	2215	-71.31156481370	42.89160046500
2216	7/23/2015	Sandt DOT	Parallel Filled	Asphalt	Flat	No	No	No	No	No	80	3	3	1	19	75	2216	-71.31121072000	42.89129136810
2217	7/23/2015	Sandt DOT	Parallel	Asphalt	Flat	Yes	No	No	Yes	Yes	108	4	8	1	46	38	2217	-71.30640726040	42.88644995340
2218	7/24/2015	Sandt DOT	Parallel	Asphalt	Flat	Yes	No	No	No	Yes	74	1	0	1	27	64	2218	-71.37006525880	42.91630480440
2219	7/24/2015	Sandt DOT	Parallel	Asphalt	Flat	Yes	No	No	No	Yes	74	1	0	1	27	64	2219	-71.37032840890	42.91631295570
2220	7/24/2015	Sandt DOT	Hatched	Asphalt	Flat	Yes	No	No	No	Yes	74	0	6	1	35	53	2220	-71.37341416500	42.91642414410
2221	7/24/2015	Sandt DOT	Parallel	Asphalt	Flat	Yes	No	No	Yes	Yes	74	0	6	1	36	52	2221	-71.37297295530	42.91643514590

2222	7/24/2015 Sandt DOT	Parallel	Asphalt	Flat	Yes	No	No	Yes	Yes	74	0	2	1	26	66	2222	-71.37527000150	42.91667859830
2223	7/24/2015 Sandt DOT	Parallel	Asphalt	Flat	Yes	No	No	Yes	Yes	74	0	2	1	26	66	2223	-71.37915575040	42.91746554230
2224	7/24/2015 Sandt DOT	Parallel	Asphalt	Flat	Yes	No	No	Yes	Yes	74	2	2	1	26	66	2224	-71.37897333610	42.91757807830
2225	7/24/2015 Sandt DOT	Parallel Filled	Asphalt	Flat	Yes	No	No	Yes	Yes	80	3	1	1	36	52	2225	-71.37806332770	42.91761232610
2226	7/24/2015 Sandt DOT	Parallel	Asphalt	Flat	Yes	No	No	No	Yes	74	0	3	1	27	64	2226	-71.37308207320	42.91676192780
2227	7/24/2015 Sandt DOT	Parallel	Asphalt	Flat	Yes	No	No	No	Yes	74	0	3	1	27	64	2227	-71.37351354860	42.91677657560
2228	7/24/2015 Sandt DOT	Hatched	Asphalt	Flat	Yes	No	No	Yes	No	74	2	5	1	26	66	2228	-71.37013308480	42.91666900490
2229	7/24/2015 Sandt DOT	Parallel	Asphalt	Flat	Yes	No	No	No	Yes	74	1	0	1	27	64	2229	-71.37065157310	42.91665494130
2230	7/24/2015 Sandt DOT	Parallel	Asphalt	Flat	Yes	No	No	No	Yes	74	0	0	1	27	64	2230	-71.36834694010	42.91644136320
2231	7/30/2015 Sandt DOT	Parallel	Asphalt	Flat	Yes	Yes	No	No	Yes	96	0	1	1	26	66	2231	-71.62403724760	42.82356642350
2232	7/30/2015 Sandt DOT	Parallel Filled	Asphalt	Flat	Yes	Yes	No	No	No	60	2	2	1	53	29	2232	-71.62326893290	42.82370753090
2233	7/30/2015 Sandt DOT	Parallel Filled	Asphalt	Flat	Yes	Yes	No	No	No	60	2	2	1	53	29	2233	-71.62366958830	42.82363825490
2234	7/30/2015 Sandt DOT	Hatched	Asphalt	Flat	Yes	No	No	No	No	74	3	5	1	37	51	2234	-71.66260931180	42.73358019540
2235	7/30/2015 Sandt DOT	Hatched	Asphalt	Flat	Yes	No	No	Yes	Yes	64	1	5	1	49	34	2235	-71.65845783950	42.73203786230
2236	7/30/2015 Sandt DOT	Parallel	Asphalt	Flat	Yes	No	No	Yes	No	69	3	4	1	63	15	2236	-71.65849945510	42.73210565100
2237	7/30/2015 Sandt DOT	Parallel	Asphalt	Flat	Yes	No	No	Yes	No	69	3	4	1	63	15	2237	-71.66053693170	42.73343737470
2238	7/30/2015 Sandt DOT	Hatched	Asphalt	Flat	Yes	No	No	No	Yes	75	2	4	1	25	67	2238	-71.66409496280	42.73934449320
2239	7/30/2015 Sandt DOT	Parallel	Asphalt	Flat	Yes	No	No	Yes	No	84	4	0	1	38	49	2239	-71.66462084290	42.74288127920
2240	7/31/2015 Sandt DOT	Parallel Filled	Asphalt	Flat	No	No	No	No	No	87	2	0	1	9	89	2240	-71.81846468230	43.28113428970
2241	7/31/2015 Sandt DOT	Parallel Filled	Asphalt	Retroreflective	No	No	No	Yes	Yes	80	4	5	1	14	82	2241	-71.82056962980	43.28247677310
2242	7/31/2015 Sandt DOT	Parallel Filled	Asphalt	Flat	No	No	No	No	No	70	2	1	1	34	55	2242	-71.81653407840	43.28094143870
2243	7/31/2015 Sandt DOT	Parallel Filled	Asphalt	Flat	No	No	No	No	No	84	15	3	1	19	75	2243	-71.81417826090	43.27985642240
2244	7/31/2015 Sandt DOT	Parallel Filled	Asphalt	Retroreflective	No	No	No	No	Yes	87	3	6	1	25	67	2244	-71.81317368990	43.27927090440
2245	7/31/2015 Sandt DOT	Parallel Filled	Asphalt	Retroreflective	No	No	No	No	Yes	87	3	6	1	25	67	2245	-71.81317368990	43.27927090440
2246	7/31/2015 Sandt DOT	Parallel Filled	Asphalt	Flat	No	No	No	Yes	No	75	6	4	1	18	77	2246	-71.81502973650	43.28011633990
2247	7/31/2015 Sandt DOT	Parallel Filled	Asphalt	Flat	No	No	No	Yes	No	70	2	4	1	33	56	2247	-71.81679203160	43.28084282600
2248	7/31/2015 Sandt DOT	Parallel Filled	Asphalt	Flat	No	No	No	Yes	No	70	2	4	1	33	56	2248	-71.81664002570	43.28077009200
2249	7/31/2015 Sandt DOT	Parallel Filled	Asphalt	Retroreflective	No	No	No	Yes	Yes	80	0	5	1	4	96	2249	-71.81671252970	43.28089525470
2250	7/31/2015 Sandt DOT	Parallel Filled	Asphalt	Retroreflective	No	No	No	Yes	Yes	80	0	5	1	4	96	2250	-71.81621946390	43.28072271320
2251	7/31/2015 Sandt DOT	Parallel Filled	Asphalt	Retroreflective	No	No	No	No	Yes	80	4	6	1	25	67	2251	-71.81509464810	43.28023682070
2252	7/31/2015 Sandt DOT	Parallel Filled	Asphalt	Flat	No	No	No	No	No	75	3	0	1	19	75	2252	-71.82626514180	43.18609307430
2253	7/31/2015 Sandt DOT	Parallel Filled	Asphalt	Flat	No	No	No	Yes	No	72	6	3	1	43	42	2253	-71.82506274890	43.18417058550
2254	7/31/2015 Sandt DOT	Parallel Filled	Asphalt	Flat	No	No	No	Yes	No	72	4	2	1	43	42	2254	-71.82406930020	43.18252418230
2255	7/31/2015 Sandt DOT	Parallel Filled	Asphalt	Flat	No	No	No	Yes	Yes	56	7	5	1	41	45	2255	-71.82249235480	43.17970338750
2256	7/31/2015 Sandt DOT	Parallel Filled	Asphalt	Flat	No	No	No	Yes	Yes	76	5	2	1	16	79	2256	-71.82205209550	43.17704779430
2257	7/31/2015 Sandt DOT	Parallel Filled	Asphalt	Flat	No	No	No	Yes	Yes	76	5	2	1	16	79	2257	-71.82192619900	43.17801430860
2258	7/31/2015 Sandt DOT	Parallel Filled	Asphalt	Flat	No	No	No	Yes	Yes	84	3	3	1	16	79	2258	-71.82185566490	43.17852719720
2259	7/31/2015 Sandt DOT	Parallel Filled	Asphalt	Flat	No	No	No	Yes	Yes	76	1	1	1	6	93	2259	-71.82211219330	43.17908610170
2260	7/31/2015 Sandt DOT	Parallel Filled	Asphalt	Flat	No	No	No	Yes	Yes	58	1	1	1	31	59	2260	-71.82224846920	43.17957287240
2261	7/31/2015 Sandt DOT	Parallel Filled	Asphalt	Flat	No	No	No	Yes	Yes	58	4	3	1	41	45	2261	-71.82203080520	43.17975414010
2262	7/31/2015 Sandt DOT	Parallel Filled	Asphalt	Flat	No	No	No	Yes	Yes	58	1	5	1	31	59	2262	-71.82239625660	43.17975926690
2263	7/31/2015 Sandt DOT	Parallel Filled	Asphalt	Flat	No	No	No	Yes	No	58	3	2	1	43	42	2263	-71.82210515250	43.18101165580
2264	7/31/2015 Sandt DOT	Parallel Filled	Asphalt	Flat	No	No	No	No	No	58	2	1	1	34	55	2264	-71.82117111520	43.18570244120
2265	7/31/2015 Sandt DOT	Parallel Filled	Asphalt	Flat	No	No	No	No	Yes	58	0	2	1	32	58	2265	-71.82092548340	43.18603113770
2266	7/31/2015 Sandt DOT	Parallel Filled	Asphalt	Flat	No	No	No	No	Yes	58	2	2	1	32	58	2266	-71.82232077700	43.18448245520
2267	7/31/2015 Sandt DOT	Parallel Filled	Asphalt	Flat	No	No	No	No	Yes	58	1	4	1	32	58	2267	-71.82236555350	43.18287163340
2268	8/4/2015 Sandt DOT	Parallel Filled	Asphalt	Flat	Yes	No	No	No	Yes	84	4	3	1	37	51	2268	-71.67072056340	43.19045032850
2269	8/4/2015 Sandt DOT	Parallel Filled	Asphalt	Flat	No	No	No	No	Yes	84	0	2	1	7	92	2269	-71.67078141600	43.19053377060
2270	8/4/2015 Sandt DOT	Parallel Filled	Asphalt	Flat	No	No	No	No	Yes	84	2	6	1	17	78	2270	-71.71290894520	43.22071629130
2271	8/4/2015 Sandt DOT	Parallel Filled	Asphalt	Flat	No	No	No	No	Yes	84	2	3	1	7	92	2271	-71.71126315840	43.21715783790
2272	8/5/2015 Sandt DOT	Parallel Filled	Asphalt	Flat	No	No	No	No	Yes	96	1	1	1	7	92	2272	-71.60729876720	43.30066453940
2273	8/5/2015 Sandt DOT	Parallel	Asphalt	Flat	Yes	No	No	Yes	No	94	3	1	1	38	49	2273	-71.61175643090	43.30757313440
2274	8/5/2015 Sandt DOT	Parallel Filled	Asphalt	Flat	No	No	No	No	Yes	96	0	5	1	7	92	2274	-71.61184460850	43.30771059730
2275	8/5/2015 Sandt DOT	Parallel Filled	Asphalt	Flat	No	No	No	Yes	Yes	96	1	7	1	16	79	2275	-71.62051505890	43.31524146500
2276	8/5/2015 Sandt DOT	Parallel Filled	Asphalt	Flat	No	No	No	Yes	Yes	96	1	7	1	16	79	2276	-71.61734133500	43.31253834340
2277	8/7/2015 Sandt DOT	Hatched	Asphalt	Retroreflective	Yes	No	No	No	No	72	1	3	1	50	33	2277	-71.60007599760	43.01971842070
2278	8/7/2015 Sandt DOT	Hatched	Asphalt	Retroreflective	Yes	No	No	No	No	72	1	6	1	60	19	2278	-71.59996179370	43.01929909500
2279	8/7/2015 Sandt DOT	Hatched	Asphalt	Retroreflective	Yes	No	No	Yes	No	72	1	6	1	59	21	2279	-71.59986640800	43.01881182590
2280	8/7/2015 Sandt DOT	Hatched	Asphalt	Retroreflective	Yes	No	No	Yes	No	72	1	1	1	49	34	2280	-71.59980329230	43.01834969810
2281	8/7/2015 Sandt DOT	Hatched	Asphalt	Retroreflective	Yes	No	No	No	No	72	2	2	1	50	33	2281	-71.59969311200	43.01828568110
2282	8/7/2015 Sandt DOT	Hatched	Asphalt	Retroreflective	Yes	No	No	Yes	No	72	2	2	1	49	34	2282	-71.59990689280	43.01831868490
2283	8/7/2015 Sandt DOT	Hatched	Asphalt	Retroreflective	Yes	No	No	Yes	No	72	1	1	1	49	34	2283	-71.59922590490	43.01780361850
2284	8/7/2015 Sandt DOT	Hatched	Asphalt	Retroreflective	Yes	No	No	No	No	72	1	1	1	50	33	2284	-71.59831265440	43.01705632840
2285	8/7/2015 Sandt DOT	Hatched	Asphalt	Retroreflective	Yes	No	No	No	No	72	0	3	1	50	33	2285	-71.59981984630	43.01882486790
2286	8/7/2015 Sandt DOT	Hatched	Asphalt	Retroreflective	Yes	No	No	No	No	72	0	1	1	50	33	2286	-71.59990215710	43.01933804730
2287	8/7/2015 Sandt DOT	Hatched	Asphalt	Retroreflective	Yes	No	No	No	No	72	0	1	1	50	33	2287	-71.59996200400	43.01987041920
2288	8/7/2015 Sandt DOT	Hatched	Asphalt	Retroreflective	Yes	No	No	Yes	No	72	0	2	1	49	34	2288	-71.60012754630	43.02017578190
2289	8/7/2015 Sandt DOT	Hatched	Asphalt	Retroreflective	Yes	No	No	Yes	No	72	2	1	1	49	34	2289	-71.60008119420	43.02030159180
2290	8/7/2015 Sandt DOT	Hatched	Asphalt	Retroreflective	Yes	No	No	Yes	No	72	2	3	1	49	34	2290	-71.60031488290	43.02061558690
2291	8/7/2015 Sandt DOT	Hatched	Asphalt	Retroreflective	Yes	No	No	Yes	No	72	2	2	1	49	34	2291	-71.60043755140	43.02058104440
2292	8/7/2015 Sandt DOT	Hatched	Asphalt	Retroreflective	Yes	No	No	No	No	72	1	4	1	50	33	2292	-71.60322000710	43.02141091590
2293	8/7/2015 Sandt DOT	Hatched	Asphalt	Retroreflective	Yes	No	No	No	No	72	2	5	1	50	33	2293	-71.60508845910	43.02185869800
2294	8/7/2015 Sandt DOT	Hatched	Asphalt	Retroreflective	Yes	No	No	No	No	72	2	6	1	60	19	2294	-71.60515587260	43.02197820060
2295	8/7/2015 Sandt DOT	Hatched	Asphalt	Retroreflective	Yes	No	No	No	No	72	0	4	1	50	33	2295	-71.60966623010	43.02310227440
2296	8/7/2015 Sandt DOT	Hatched	Asphalt	Retroreflective	Yes	No	No	Yes	No	72	4	2	1	59	21	2296	-71.60150004110	43.02108427270
2297	8/7/2015 Sandt DOT	Hatched	Asphalt	Retroreflective	Yes	No	No	Yes	No	72	0	6	1	59	21	2297	-71.60143508110	43.02097895390
2298	8/7/2015 Sandt DOT	Hatched	Asphalt	Retroreflective	Yes	No	No	No	No	72	0	4	1	50	33	2298	-71.61388338090	43.02407709150
2299	8/7/2015 Sandt DOT	Hatched	Asphalt	Flat	Yes	No	No	Yes	Yes	72	0	3	1	49	34	2299	-71.68948296850	42.97919441280
2300	8/7/2015 Sandt DOT	Parallel Filled	Asphalt	Flat	Yes	No	No	Yes	No	80	2	2	1	28	63	2300	-71.69141288350	42.97615880190
2301	8/7/2015 Sandt DOT	Parallel Filled	Asphalt	Flat	Yes	No	No	Yes	No	80	2	3	1	28	63	2301	-71.69163169330	42.97615599350
2302	8/10/2015 Sandt DOT	Parallel	Asphalt	Flat	Yes	Yes	No	No	Yes	80	2	0	1	26	66	2302	-71.91917706290	43.11184324800
2303	8/10/2015 Sandt DOT	Parallel	Asphalt	Flat	Yes	Yes	No	No	Yes	80	0	7	1	36	52	2303	-71.91935315730	43.11202607710
2304	8/10/2015 Sandt DOT	Parallel	Asphalt	Flat	Yes	Yes	No	Yes	Yes	80	0	7	1	35	53	2304	-71.91891221120	43.11196713800
2305	8/10/2015 Sandt DOT	Parallel	Asphalt	Flat	Yes	Yes	No	Yes	Yes	80	2	0	1	25	67	2305	-71.91908092980	43.11215075650
2306	8/10/2015 Sandt DOT	Parallel	Asphalt	Flat	Yes	Yes	No	Yes	Yes	80	4	0	1	35	53	2306	-71.91601088250	43.11151962270
2307	8/10/2015 Sandt DOT	Parallel Filled	Asphalt	Flat	Yes	No	No	No	No	64	3	7	1	74	0	2307	-71.89901766320	43.11125760420
2308	8/10/2015 Sandt DOT	Parallel Filled	Asphalt	Flat	Yes	No	No	Yes	No	70	5	0	1	63	15	2308	-71.89772802390	43.11236236040
2309	8/10/2015 Sandt DOT	Parallel Filled	Asphalt	Flat	Yes	No	No	Yes	No	70	2	5	1	53	29	2309	-71.89763620370	43.11236592230
2310	8/10/2015 Sandt DOT	Parallel Filled	Asphalt	Flat	Yes	No	No	Yes	No	70	0	3	1	53	29	2310	-71.89742887420	43.11266138450

2311	8/10/2015	Sandt DOT	Parallel Filled	Asphalt	Flat	Yes	No	No	Yes	No	70	0	3	1	53	29	2311	-71.89704678460	43.11299863040
2312	8/10/2015	Sandt DOT	Parallel Filled	Asphalt	Flat	Yes	No	No	Yes	No	70	4	4	1	63	15	2312	-71.89693568950	43.11297899250
2313	8/10/2015	Sandt DOT	Parallel	Asphalt	Flat	Yes	No	No	Yes	No	68	0	3	1	53	29	2313	-71.89595231820	43.11406562560
2314	8/10/2015	Sandt DOT	Parallel	Asphalt	Flat	Yes	No	No	Yes	No	68	1	4	1	53	29	2314	-71.89579842630	43.11399928280
2315	8/10/2015	Sandt DOT	Parallel	Asphalt	Flat	Yes	No	No	Yes	No	68	1	4	1	53	29	2315	-71.89585240610	43.11396906610
2316	8/10/2015	Sandt DOT	Parallel	Asphalt	Flat	Yes	No	No	No	No	70	1	1	1	54	27	2316	-71.90922367190	43.11082346660
2317	8/10/2015	Sandt DOT	Hatched	Asphalt	Flat	No	No	No	Yes	Yes	60	1	3	1	29	62	2317	-71.90025202480	43.11923593960
2318	8/10/2015	Sandt DOT	Hatched	Asphalt	Flat	No	No	No	Yes	Yes	60	6	0	1	39	48	2318	-71.90013170190	43.11920773470
2319	8/10/2015	Sandt DOT	Hatched	Asphalt	Flat	No	No	No	Yes	Yes	60	1	0	1	29	62	2319	-71.89932360350	43.11820775170
2320	8/10/2015	Sandt DOT	Hatched	Asphalt	Flat	No	No	No	Yes	Yes	60	1	0	1	29	62	2320	-71.89890509430	43.11785447670
2321	8/10/2015	Sandt DOT	Hatched	Asphalt	Flat	No	No	No	No	Yes	60	1	3	1	30	60	2321	-71.89821857520	43.11751173550
2322	8/10/2015	Sandt DOT	Parallel Filled	Asphalt	Flat	No	No	No	No	Yes	60	3	6	1	52	30	2322	-71.89803928590	43.11749101600
2323	8/10/2015	Sandt DOT	Hatched	Asphalt	Flat	No	No	No	No	No	60	3	0	1	42	44	2323	-71.89520104810	43.11520484350
2324	8/10/2015	Sandt DOT	Hatched	Asphalt	Flat	No	No	No	No	No	60	3	0	1	42	44	2324	-71.89554462230	43.11575742730
2325	8/10/2015	Sandt DOT	Hatched	Asphalt	Flat	No	No	No	Yes	No	60	0	1	1	31	59	2325	-71.89567169180	43.11579567160
2326	8/10/2015	Sandt DOT	Hatched	Asphalt	Flat	No	No	No	Yes	No	60	0	1	1	31	59	2326	-71.89561578400	43.11585251430
2327	8/10/2015	Sandt DOT	Hatched	Asphalt	Flat	No	No	No	Yes	No	60	2	5	1	31	59	2327	-71.89590998910	43.11615157240
2328	8/10/2015	Sandt DOT	Hatched	Asphalt	Flat	No	No	No	Yes	No	60	2	5	1	31	59	2328	-71.89612967890	43.11634805920
2329	8/10/2015	Sandt DOT	Parallel Filled	Asphalt	Flat	No	No	No	No	Yes	60	3	6	1	52	30	2329	-71.89810977760	43.11740675750
2330	8/12/2015	Sandt DOT	Parallel	Asphalt	Flat	Yes	No	No	Yes	Yes	108	0	0	1	26	66	2330	-71.53832416950	42.80145546450
2331	8/12/2015	Sandt DOT	Parallel	Asphalt	Flat	Yes	Yes	No	Yes	Yes	96	0	0	1	25	67	2331	-71.53352212730	42.79882038950
2332	8/12/2015	Sandt DOT	Parallel Filled	Asphalt	Flat	Yes	No	No	No	No	72	0	0	1	54	27	2332	-71.53248793480	42.79828184590
2333	8/12/2015	Sandt DOT	Parallel	Asphalt	Flat	Yes	Yes	No	Yes	Yes	100	1	2	1	25	67	2333	-71.54616355410	42.80505152910
2334	8/12/2015	Sandt DOT	Parallel	Asphalt	Flat	Yes	Yes	No	No	Yes	84	1	2	1	26	66	2334	-71.54994936230	42.80419852440
2335	8/12/2015	Sandt DOT	Parallel	Asphalt	Flat	Yes	Yes	No	No	Yes	84	1	2	1	26	66	2335	-71.55162741990	42.80332648810
2336	8/12/2015	Sandt DOT	Parallel	Asphalt	Flat	Yes	Yes	No	No	Yes	64	3	1	1	61	18	2336	-71.56787959860	42.80692117780
2337	8/12/2015	Sandt DOT	Parallel	Asphalt	Flat	Yes	Yes	No	No	Yes	82	4	1	1	36	52	2337	-71.56796267290	42.80716799860
2338	8/12/2015	Sandt DOT	Parallel Filled	Asphalt	Flat	Yes	Yes	No	Yes	No	72	2	1	1	52	30	2338	-71.57011664450	42.80783994080
2339	8/12/2015	Sandt DOT	Parallel	Asphalt	Flat	Yes	Yes	No	Yes	Yes	96	1	1	1	25	67	2339	-71.56772453940	42.80718698480
2340	8/13/2015	Sandt DOT	Parallel Filled	Asphalt	Flat	No	No	No	Yes	No	114	3	0	1	18	77	2340	-71.73679359740	42.84243689390
2341	8/13/2015	Sandt DOT	Parallel Filled	Asphalt	Flat	No	No	Yes	Yes	Yes	120	3	0	1	15	81	2341	-71.73554548970	42.84210868410
2342	8/13/2015	Sandt DOT	Parallel Filled	Asphalt	Flat	Yes	No	No	Yes	No	64	4	2	1	63	15	2342	-71.73285900570	42.84136870460
2343	8/13/2015	Sandt DOT	Parallel Filled	Asphalt	Flat	Yes	No	No	Yes	No	64	6	3	1	63	15	2343	-71.73182136840	42.84090954350
2344	8/13/2015	Sandt DOT	Parallel Filled	Asphalt	Flat	No	No	No	Yes	Yes	52	1	1	1	31	59	2344	-71.72914494330	42.83978324630
2345	8/13/2015	Sandt DOT	Parallel Filled	Asphalt	Flat	No	No	Yes	Yes	Yes	120	3	0	1	15	81	2345	-71.73762503500	42.84350553380
2346	8/13/2015	Sandt DOT	Parallel Filled	Asphalt	Flat	No	No	No	No	Yes	120	3	0	1	17	78	2346	-71.73781999250	42.84374617500
2347	8/14/2015	Sandt DOT	Parallel Filled	Asphalt	Flat	No	No	No	No	Yes	78	3	3	1	17	78	2347	-71.73947626510	42.84381815060
2348	8/14/2015	Sandt DOT	Parallel Filled	Asphalt	Flat	No	Yes	No	Yes	Yes	120	2	1	1	5	95	2348	-71.73843246880	42.84446269060
2349	8/14/2015	Sandt DOT	Parallel Filled	Asphalt	Flat	No	No	No	Yes	Yes	68	12	9	1	51	32	2349	-71.73916274210	42.84561692510
2350	8/14/2015	Sandt DOT	Parallel Filled	Asphalt	Flat	No	No	No	Yes	Yes	68	9	7	1	51	32	2350	-71.73929852850	42.84571415550
2351	8/14/2015	Sandt DOT	Parallel Filled	Asphalt	Flat	No	No	No	No	Yes	54	0	12	1	42	44	2351	-71.73772032720	42.84407610160
2352	8/14/2015	Sandt DOT	Parallel Filled	Asphalt	Flat	No	No	No	No	Yes	60	0	1	1	32	58	2352	-71.73632241960	42.84349987070
2353	8/14/2015	Sandt DOT	Parallel Filled	Asphalt	Flat	No	No	No	Yes	Yes	48	0	3	1	31	59	2353	-71.73631570300	42.84336864980
2354	8/14/2015	Sandt DOT	Parallel Filled	Asphalt	Flat	No	No	No	Yes	Yes	56	2	3	1	31	59	2354	-71.73623965890	42.84341090880
2355	8/14/2015	Sandt DOT	Parallel Filled	Asphalt	Flat	No	No	No	No	Yes	67	2	3	1	32	58	2355	-71.73639765470	42.84347082440
2356	8/14/2015	Sandt DOT	Parallel Filled	Asphalt	Flat	No	No	No	No	Yes	60	4	7	1	52	30	2356	-71.73727649480	42.84375237500
2357	8/14/2015	Sandt DOT	Parallel Filled	Asphalt	Flat	No	No	No	Yes	Yes	60	0	6	1	41	45	2357	-71.73477590250	42.84331780140
2358	8/14/2015	Sandt DOT	Parallel Filled	Asphalt	Flat	No	No	No	Yes	Yes	54	1	4	1	31	59	2358	-71.73473856450	42.84324872300
2359	8/14/2015	Sandt DOT	Parallel	Asphalt	Flat	Yes	No	No	Yes	Yes	82	3	4	1	36	52	2359	-71.81326995630	42.98845682510
2360	8/10/2015	Sandt DOT	Parallel	Asphalt	Flat	Yes	No	No	Yes	No	68	3	3	1	63	15	2360	-71.89542991570	43.11425539210
2361	8/10/2015	Sandt DOT	Parallel	Asphalt	Flat	Yes	No	No	Yes	Yes	72	2	7	1	61	18	2361	-71.89485909370	43.11481570880
2362	8/10/2015	Sandt DOT	Parallel	Asphalt	Flat	Yes	No	No	Yes	Yes	68	5	6	1	71	4	2362	-71.89496568420	43.11490945220
2363	8/10/2015	Sandt DOT	Parallel	Asphalt	Flat	Yes	No	No	No	Yes	80	16	7	1	47	37	2363	-71.89510063290	43.11458275370
2364	8/10/2015	Sandt DOT	Parallel	Asphalt	Flat	Yes	No	No	No	Yes	80	12	4	1	37	51	2364	-71.89497624510	43.11461186150
2365	8/14/2015	Sandt DOT	Parallel Filled	Asphalt	Flat	Yes	No	No	No	No	70	9	24	1	74	0	2365	-71.89447198990	43.11390778210
2366	8/14/2015	Sandt DOT	Parallel Filled	Asphalt	Flat	Yes	No	No	No	No	60	21	24	1	74	0	2366	-71.89380541930	43.11308546690
2367	8/14/2015	Sandt DOT	Parallel Filled	Asphalt	Flat	Yes	No	No	No	No	60	6	0	1	64	14	2367	-71.89382561920	43.11296070230
2368	8/14/2015	Sandt DOT	Parallel Filled	Asphalt	Flat	Yes	No	No	No	No	58	2	8	1	64	14	2368	-71.89205435550	43.11188631000
2369	8/17/2015	Sandt DOT	Parallel Filled	Asphalt	Flat	No	No	No	Yes	No	96	1	10	1	18	77	2369	-71.93881762200	43.03215902980
2370	8/17/2015	Sandt DOT	Parallel Filled	Asphalt	Flat	No	No	No	Yes	No	96	4	0	1	18	77	2370	-71.93886053730	43.03210284110
2371	8/17/2015	Sandt DOT	Parallel Filled	Asphalt	Flat	No	No	No	No	No	96	4	0	1	19	75	2371	-71.93981703830	43.03383461430
2372	8/17/2015	Sandt DOT	Parallel Filled	Asphalt	Flat	No	No	No	Yes	No	96	0	2	1	8	90	2372	-71.93839316270	43.03127318040
2373	8/17/2015	Sandt DOT	Parallel Filled	Asphalt	Flat	No	No	No	Yes	No	96	1	2	1	8	90	2373	-71.93826487740	43.03122974960
2374	8/17/2015	Sandt DOT	Parallel Filled	Asphalt	Flat	No	No	No	Yes	No	96	3	0	1	18	77	2374	-71.93822338770	43.02928971610
2375	8/17/2015	Sandt DOT	Parallel Filled	Asphalt	Flat	No	No	No	Yes	No	96	2	6	1	18	77	2375	-71.93811999660	43.02933030540
2376	8/17/2015	Sandt DOT	Parallel Filled	Asphalt	Flat	Yes	No	No	Yes	No	96	5	6	1	48	36	2376	-71.93777311090	43.02768493790
2377	8/17/2015	Sandt DOT	Parallel Filled	Asphalt	Flat	Yes	No	No	Yes	No	96	2	8	1	38	49	2377	-71.93754700940	43.02655763480
2378	8/17/2015	Sandt DOT	Parallel Filled	Asphalt	Flat	No	No	No	Yes	No	96	1	9	1	18	77	2378	-71.93813531880	43.02988225730
2379	8/17/2015	Sandt DOT	Parallel Filled	Asphalt	Flat	No	No	No	Yes	No	96	2	6	1	18	77	2379	-71.93829559730	43.03069281010
2380	8/17/2015	Sandt DOT	Hatched	Asphalt	Flat	Yes	No	No	No	Yes	84	3	6	1	45	40	2380	-71.92410270280	43.00229537540
2381	8/17/2015	Sandt DOT	Hatched	Asphalt	Flat	Yes	No	No	No	No	84	2	4	1	27	64	2381	-71.92426060320	43.00233925710
2382	8/17/2015	Sandt DOT	Hatched	Asphalt	Flat	Yes	No	No	No	Yes	84	0	1	1	25	67	2382	-71.92378350580	43.00199197400
2383	8/17/2015	Sandt DOT	Hatched	Asphalt	Flat	Yes	No	No	Yes	Yes	84	4	2	1	34	55	2383	-71.92380232330	43.00187653390
2384	8/17/2015	Sandt DOT	Hatched	Asphalt	Flat	Yes	No	No	No	No	84	5	1	1	37	51	2384	-71.92395478960	43.00191140310
2385	8/17/2015	Sandt DOT	Hatched	Asphalt	Flat	Yes	No	No	Yes	No	144	2	4	1	26	66	2385	-71.92286275290	43.00084302460
2386	8/17/2015	Sandt DOT	Hatched	Asphalt	Flat	Yes	No	No	Yes	No	144	2	4	1	26	66	2386	-71.92311680850	43.00090781670
2387	8/17/2015	Sandt DOT	Hatched	Asphalt	Flat	Yes	No	No	Yes	No	84	2	4	1	26	66	2387	-71.92308596350	43.00098593620
2388	8/17/2015	Sandt DOT	Hatched	Asphalt	Flat	Yes	No	No	No	Yes	80	4	0	1	35	53	2388	-71.92529299850	43.00145683840
2389	8/17/2015	Sandt DOT	Hatched	Asphalt	Flat	Yes	No	No	No	No	120	0	1	1	27	64	2389	-71.92502570310	43.00133961680
2390	8/18/2015	Sandt DOT	Parallel Filled	Asphalt	Flat	Yes	No	No	No	No	84	5	2	1	39	48	2390	-71.87246844640	42.95049483900
2391	8/18/2015	Sandt DOT	Parallel Filled	Asphalt	Flat	Yes	No	No	Yes	Yes	84	6	6	1	46	38	2391	-71.87150155220	42.95043645880
2392	8/18/2015	Sandt DOT	Parallel Filled	Asphalt	Flat	Yes	No	No	Yes	No	84	5	7	1	48	36	2392	-71.87134522960	42.95037835140
2393	8/18/2015	Sandt DOT	Parallel	Asphalt	Flat	Yes	No	No	Yes	No	120	3	1	1	38	49	2393	-71.94338425090	42.89210855480
2394	8/19/2015	Sandt DOT	Parallel Filled	Asphalt	Flat	Yes	No	No	Yes	No	72	1	6	1	63	15	2394	-71.94930489160	42.87757900790
2395	8/19/2015	Sandt DOT	Parallel Filled	Asphalt	Flat	Yes	No	No	No	No	72	0	4	1	54	27	2395	-71.94939994300	42.87738704110
2396	8/19/2015	Sandt DOT	Parallel Filled	Stamped Asphalt	Flat	Yes	No	No	Yes	No	72	2	5	1	57	23	2396	-71.94924504480	42.87747927330
2397	8/19/2015	Sandt DOT	Parallel Filled	Asphalt	Flat	Yes	No	No	Yes	No	84	6	11	1	48	36	2397	-71.95042190640	42.87764635640
2398	8/19/2015	Sandt DOT	Parallel Filled	Asphalt	Flat	Yes	No	No	No	No	78	3	5	1	39	48	2398	-71.95023796530	42.87760459380
2399	8/19/2015	Sandt DOT	Parallel Filled	Asphalt	Flat	Yes	No	No	No	No	76	4	4	1	39	48	2399	-71.95034567270	42.87757397860

2400	8/19/2015	Sandt DOT	Parallel Filled	Asphalt	Flat	Yes	No	No	No	No	60	5	7	1	74	0	2400	-71.94866702590	42.87738244790
2401	8/19/2015	Sandt DOT	Parallel Filled	Asphalt	Flat	Yes	No	No	No	No	80	3	0	1	39	48	2401	-71.94801885620	42.87748554960
2402	8/19/2015	Sandt DOT	Parallel	Asphalt	Flat	Yes	No	No	No	No	72	0	8	1	64	14	2402	-71.94666050870	42.88063024370
2403	8/19/2015	Sandt DOT	Parallel	Asphalt	Flat	Yes	No	No	No	No	72	4	6	1	74	0	2403	-71.94796588300	42.87762345280
2404	8/19/2015	Sandt DOT	Parallel	Asphalt	Flat	Yes	No	No	No	No	72	0	2	1	54	27	2404	-71.94812815640	42.87572476300
2405	8/20/2015	Sandt DOT	Parallel Filled	Asphalt	Flat	Yes	No	No	No	No	72	4	3	1	64	14	2405	-71.95094854120	42.87540208090
2406	8/20/2015	Sandt DOT	Parallel Filled	Asphalt	Flat	Yes	No	No	No	No	64	8	5	1	64	14	2406	-71.95100006760	42.87548941040
2407	8/20/2015	Sandt DOT	Parallel Filled	Stamped Asphalt	Flat	Yes	No	Yes	No	No	72	0	0	1	57	23	2407	-71.95088337210	42.87636901730
2408	8/20/2015	Sandt DOT	Textured	Stamped Asphalt	None	Yes	No	Yes	No	No	60	4	2	1	69	7	2408	-71.95065157450	42.87670297080
2409	8/20/2015	Sandt DOT	Textured	Stamped Asphalt	None	Yes	No	Yes	No	No	60	4	2	1	69	7	2409	-71.95075275100	42.87672642560
2410	8/20/2015	Sandt DOT	Textured	Stamped Asphalt	None	Yes	No	Yes	No	No	60	2	4	1	59	21	2410	-71.95072321050	42.87667520160
2411	8/20/2015	Sandt DOT	Textured	Stamped Asphalt	None	Yes	No	Yes	No	No	60	2	4	1	59	21	2411	-71.95068782390	42.87676653080
2412	8/20/2015	Sandt DOT	Hatched	Asphalt	Flat	Yes	Yes	No	No	Yes	80	3	5	1	34	55	2412	-71.95124911610	42.87056264220
2413	8/20/2015	Sandt DOT	Parallel	Asphalt	Flat	Yes	Yes	No	No	Yes	74	3	5	1	36	52	2413	-71.95148846170	42.87063437030
2414	8/20/2015	Sandt DOT	Parallel	Asphalt	Flat	Yes	Yes	No	No	Yes	74	4	4	1	36	52	2414	-71.95159269070	42.87073206200
2415	8/20/2015	Sandt DOT	Parallel	Asphalt	Flat	Yes	Yes	No	No	Yes	74	2	2	1	26	66	2415	-71.95163548020	42.87058718070
2416	8/20/2015	Sandt DOT	Parallel	Asphalt	Flat	Yes	Yes	No	No	Yes	74	3	1	1	36	52	2416	-71.95178182810	42.87051012970
2417	8/20/2015	Sandt DOT	Parallel	Asphalt	Flat	Yes	Yes	No	No	Yes	74	2	1	1	26	66	2417	-71.95159394810	42.87045824550
2418	8/20/2015	Sandt DOT	Parallel	Asphalt	Flat	Yes	Yes	No	No	Yes	74	2	3	1	26	66	2418	-71.95140057710	42.87034236600
2419	8/20/2015	Sandt DOT	Parallel	Asphalt	Flat	Yes	Yes	No	No	Yes	74	3	2	1	36	52	2419	-71.95139137690	42.87048296520
2420	8/20/2015	Sandt DOT	Parallel	Stamped Asphalt	None	Yes	No	Yes	No	No	64	2	4	1	57	23	2420	-71.95029236400	42.87254974060
2421	8/20/2015	Sandt DOT	Hatched	Asphalt	Flat	Yes	No	No	No	Yes	72	0	0	1	50	33	2421	-71.84746027740	42.75760624510
2422	8/20/2015	Sandt DOT	Parallel	Asphalt	Flat	Yes	No	No	No	Yes	78	0	2	1	27	64	2422	-71.85144377960	42.75801814390
2423	8/20/2015	Sandt DOT	Hatched	Asphalt	Flat	Yes	No	No	No	No	84	1	6	1	37	51	2423	-71.85403282730	42.75818581710
2424	8/24/2015	Sandt DOT	Hatched	Asphalt	Flat	Yes	No	No	No	Yes	72	5	2	1	60	19	2424	-72.05564282850	42.90602424050
2425	8/24/2015	Sandt DOT	Parallel Filled	Asphalt	Flat	Yes	No	No	Yes	Yes	88	3	1	1	36	52	2425	-72.02243188440	42.81427875380
2426	8/24/2015	Sandt DOT	Parallel Filled	Asphalt	Flat	Yes	No	No	No	Yes	88	4	1	1	37	51	2426	-72.02246918360	42.81410641980
2427	8/24/2015	Sandt DOT	Parallel Filled	Asphalt	Flat	Yes	No	No	No	Yes	88	2	6	1	37	51	2427	-72.02226076780	42.81406316680
2428	8/24/2015	Sandt DOT	Parallel Filled	Asphalt	Flat	Yes	No	No	No	Yes	88	4	6	1	47	37	2428	-72.02217740940	42.81421907010
2429	8/24/2015	Sandt DOT	Parallel Filled	Asphalt	Flat	Yes	No	No	No	Yes	88	6	1	1	37	51	2429	-72.02224505140	42.81432611920
2430	8/24/2015	Sandt DOT	Parallel Filled	Asphalt	Flat	Yes	No	No	Yes	Yes	84	1	2	1	26	66	2430	-72.02472483780	42.81547374900
2431	8/24/2015	Sandt DOT	Parallel Filled	Asphalt	Flat	Yes	No	No	Yes	No	84	1	4	1	28	63	2431	-72.02471121700	42.81536441560
2432	8/24/2015	Sandt DOT	Parallel Filled	Asphalt	Flat	Yes	No	No	Yes	No	84	3	2	1	38	49	2432	-72.02461595670	42.81540547390
2433	8/24/2015	Sandt DOT	Parallel Filled	Asphalt	Flat	Yes	No	No	Yes	Yes	88	3	1	1	36	52	2433	-72.02353624200	42.81488564460
2434	8/24/2015	Sandt DOT	Parallel Filled	Asphalt	Flat	Yes	No	No	Yes	Yes	88	0	0	1	26	66	2434	-72.02342639670	42.81473131880
2435	8/24/2015	Sandt DOT	Parallel Filled	Asphalt	Flat	Yes	No	No	Yes	Yes	88	3	1	1	36	52	2435	-72.02337250140	42.81478309190
2436	8/24/2015	Sandt DOT	Parallel Filled	Asphalt	Flat	Yes	No	No	Yes	Yes	88	0	0	1	26	66	2436	-72.02344089750	42.81493980470
2437	8/26/2015	Sandt DOT	Hatched	Asphalt	Flat	No	No	No	Yes	Yes	108	1	1	1	4	96	2437	-71.54195487070	43.18071520260
2438	8/26/2015	Sandt DOT	Hatched	Asphalt	Flat	No	No	No	Yes	Yes	108	1	2	1	4	96	2438	-71.54207687680	43.18081984750
2439	8/26/2015	Sandt DOT	Hatched	Asphalt	Flat	Yes	No	No	Yes	No	82	2	1	1	26	66	2439	-71.54141469730	43.18405718760
2440	8/26/2015	Sandt DOT	Hatched	Asphalt	Flat	No	No	No	No	Yes	102	1	2	1	5	95	2440	-71.54147250380	43.18426486860
2441	8/26/2015	Sandt DOT	Hatched	Asphalt	Flat	Yes	No	No	No	Yes	88	1	3	1	25	67	2441	-71.54114659110	43.18690011040
2442	8/26/2015	Sandt DOT	Hatched	Asphalt	Flat	Yes	No	No	No	Yes	88	3	1	1	35	53	2442	-71.54104103790	43.18748910670
2443	8/27/2015	Sandt DOT	Parallel Filled	Asphalt	Flat	No	No	No	Yes	Yes	80	5	5	1	16	79	2443	-72.02796025160	42.81699679090
2444	8/27/2015	Sandt DOT	Parallel Filled	Asphalt	Flat	No	No	No	No	Yes	84	3	3	1	17	78	2444	-72.02649769400	42.81632738140
2445	8/27/2015	Sandt DOT	Parallel Filled	Asphalt	Flat	No	No	No	No	No	75	5	5	1	19	75	2445	-72.02687819030	42.81641206970
2446	8/27/2015	Sandt DOT	Parallel Filled	Asphalt	Flat	Yes	No	No	Yes	No	84	4	2	1	38	49	2446	-72.02033909060	42.81657702560
2447	8/27/2015	Sandt DOT	Parallel Filled	Asphalt	Flat	No	No	No	No	No	75	0	1	1	9	89	2447	-72.01812090030	42.81727754920
2448	8/27/2015	Sandt DOT	Parallel Filled	Asphalt	Flat	No	No	No	No	No	75	0	1	1	9	89	2448	-72.01917942570	42.81694008060
2449	8/27/2015	Sandt DOT	Parallel Filled	Asphalt	Flat	No	No	No	No	No	75	0	1	1	9	89	2449	-72.02121312400	42.81601274270
2450	8/27/2015	Sandt DOT	Parallel Filled	Asphalt	Flat	Yes	No	No	Yes	No	72	1	1	1	53	29	2450	-72.02334629890	42.81742651210
2451	8/27/2015	Sandt DOT	Hatched	Asphalt	Flat	Yes	No	No	No	Yes	72	1	4	1	50	33	2451	-72.01969158870	42.81338920360
2452	8/27/2015	Sandt DOT	Hatched	Asphalt	Flat	Yes	No	No	No	No	72	4	0	1	62	16	2452	-72.01834206050	42.81302347590
2453	8/27/2015	Sandt DOT	Parallel Filled	Asphalt	Flat	Yes	Yes	No	No	No	74	2	6	1	38	49	2453	-72.02192423390	42.81404763900
2454	8/27/2015	Sandt DOT	Parallel Filled	Asphalt	Flat	Yes	No	No	No	No	74	1	2	1	29	62	2454	-72.02080773380	42.81290932650
2455	8/28/2015	Sandt DOT	Parallel Filled	Asphalt	Flat	Yes	No	No	Yes	No	98	6	10	1	48	36	2455	-72.18153838500	42.82418697620
2456	8/28/2015	Sandt DOT	Parallel Filled	Asphalt	Flat	Yes	No	No	Yes	No	98	4	1	1	38	49	2456	-72.18124940080	42.82352756510
2457	8/28/2015	Sandt DOT	Parallel Filled	Asphalt	Flat	Yes	No	No	Yes	No	98	1	3	1	28	63	2457	-72.18354582390	42.82551736420
2458	8/28/2015	Sandt DOT	Parallel Filled	Asphalt	Flat	Yes	No	No	No	Yes	98	1	4	1	27	64	2458	-72.18489652820	42.82931903130
2459	8/28/2015	Sandt DOT	Parallel Filled	Asphalt	Flat	Yes	No	No	No	No	98	3	3	1	39	48	2459	-72.18240751570	42.82707950270
2460	8/28/2015	Sandt DOT	Parallel	Asphalt	Flat	Yes	No	No	No	No	66	0	2	1	54	27	2460	-72.18277546190	42.83014246210
2461	8/28/2015	Sandt DOT	Parallel Filled	Asphalt	Flat	Yes	No	No	No	No	98	1	4	1	29	62	2461	-72.18290056410	42.82651084710
2462	8/28/2015	Sandt DOT	Parallel Filled	Asphalt	Flat	Yes	No	No	No	No	98	1	4	1	29	62	2462	-72.18295304710	42.82601707020
2463	8/28/2015	Sandt DOT	Parallel Filled	Asphalt	Flat	Yes	No	No	No	Yes	98	0	1	1	27	64	2463	-72.18336087530	42.82652436380
2464	8/28/2015	Sandt DOT	Parallel Filled	Asphalt	Flat	Yes	No	No	No	Yes	98	0	1	1	27	64	2464	-72.18333325950	42.82604949010
2465	8/31/2015	Sandt DOT	Parallel Filled	Asphalt	Flat	No	No	No	Yes	No	96	2	4	1	8	90	2465	-72.48596289130	42.78638650630
2466	8/31/2015	Sandt DOT	Parallel Filled	Asphalt	Flat	Yes	No	No	No	No	96	9	4	1	39	48	2466	-72.48669344440	42.78640223200
2467	8/31/2015	Sandt DOT	Parallel Filled	Asphalt	Flat	Yes	No	No	No	No	96	4	4	1	39	48	2467	-72.48882837810	42.78609282870
2468	8/31/2015	Sandt DOT	Parallel Filled	Asphalt	Flat	Yes	No	No	No	No	96	6	4	1	39	48	2468	-72.48969247700	42.78598830180
2469	8/31/2015	Sandt DOT	Parallel Filled	Asphalt	Flat	Yes	No	No	Yes	No	96	6	4	1	38	49	2469	-72.49164150420	42.78561760470
2470	8/31/2015	Sandt DOT	Parallel Filled	Asphalt	Flat	Yes	No	No	Yes	No	96	0	0	1	28	63	2470	-72.49923422450	42.78510413140
2471	8/31/2015	Sandt DOT	Parallel Filled	Asphalt	Flat	Yes	No	No	Yes	Yes	96	1	5	1	26	66	2471	-72.49884316700	42.78514683240
2472	8/31/2015	Sandt DOT	Parallel Filled	Asphalt	Flat	Yes	No	No	Yes	Yes	96	1	7	1	36	52	2472	-72.49744439480	42.78510995200
2473	9/2/2015	Sandt DOT	Parallel	Asphalt	Flat	Yes	No	No	Yes	No	72	6	2	1	63	15	2473	-72.38417945010	42.77371716160
2474	9/2/2015	Sandt DOT	Parallel	Asphalt	Flat	Yes	No	No	Yes	Yes	78	2	1	1	26	66	2474	-72.38346388120	42.77332472850
2475	9/2/2015	Sandt DOT	Parallel	Asphalt	Flat	Yes	No	No	No	Yes	78	0	3	1	27	64	2475	-72.38327069580	42.77330986290
2476	9/2/2015	Sandt DOT	Parallel	Asphalt	Flat	Yes	No	No	Yes	Yes	78	2	3	1	26	66	2476	-72.38328908140	42.77345329480
2477	9/2/2015	Sandt DOT	Parallel	Asphalt	Flat	Yes	No	No	Yes	Yes	78	5	0	1	36	52	2477	-72.38347391870	42.77346526530
2478	9/2/2015	Sandt DOT	Parallel	Asphalt	Retroreflective	Yes	No	No	No	No	70	7	0	1	62	16	2478	-72.38196557410	42.77565307480
2479	9/2/2015	Sandt DOT	Parallel	Asphalt	Retroreflective	Yes	No	No	No	No	70	7	0	1	62	16	2479	-72.38197196200	42.77616964090
2480	9/2/2015	Sandt DOT	Parallel	Asphalt	Retroreflective	Yes	No	No	No	No	70	7	0	1	62	16	2480	-72.38243911910	42.77740400020
2481	9/2/2015	Sandt DOT	Parallel Filled	Asphalt	Retroreflective	Yes	No	No	No	Yes	84	1	1	1	25	67	2481	-72.38258734350	42.77752749150
2482	9/2/2015	Sandt DOT	Parallel Filled	Asphalt	Retroreflective	Yes	No	No	No	Yes	112	3	7	1	45	40	2482	-72.38401854480	42.77271408170
2483	9/2/2015	Sandt DOT	Parallel Filled	Asphalt	Retroreflective	Yes	No	No	No	Yes	70	3	7	1	70	5	2483	-72.38441764690	42.77230408140
2484	9/2/2015	Sandt DOT	Parallel Filled	Asphalt	Retroreflective	Yes	No	No	No	Yes	70	0	1	1	50	33	2484	-72.38433188470	42.77219564950
2485	9/2/2015	Sandt DOT	Parallel Filled	Asphalt	Retroreflective	Yes	No	No	No	No	70	3	7	1	72	3	2485	-72.38499958650	42.77172247160
2486	9/2/2015	Sandt DOT	Hatched	Asphalt	Retroreflective	Yes	No	No	Yes	Yes	60	1	1	1	47	37	2486	-72.38689498850	42.76976390340
2487	9/2/2015	Sandt DOT	Parallel	Asphalt	Flat	Yes	No	No	No	No	72	4	0	1	64	14	2487	-72.38019032840	42.77160318990
2488	9/2/2015	Sandt DOT	Parallel	Asphalt	Flat	Yes	No	No	No	No	72	2	2	1	54	27	2488	-72.37754294690	42.77011500700

2489	9/2/2015 Sandt DOT	Parallel Filled	Asphalt	Retroreflective	Yes	No	No	Yes	Yes	84	0	2	1	24	68	2489	-72.37686946050	42.76988480580
2490	9/2/2015 Sandt DOT	Parallel	Asphalt	Flat	Yes	No	No	No	No	72	3	0	1	64	14	2490	-72.37536641780	42.76913883400
2491	9/3/2015 Sandt DOT	Parallel	Asphalt	Flat	Yes	No	No	No	No	79	3	3	1	39	48	2491	-72.33523258760	42.86555463270
2492	9/3/2015 Sandt DOT	Hatched	Asphalt	Flat	Yes	No	No	No	Yes	96	1	3	1	25	67	2492	-72.28201415480	42.87454467500
2493	9/4/2015 Sandt DOT	Hatched	Asphalt	Flat	Yes	Yes	No	Yes	Yes	132	1	2	1	23	70	2493	-72.29004258350	42.92265598510
2494	9/4/2015 Sandt DOT	Hatched	Asphalt	Flat	Yes	Yes	No	Yes	Yes	132	1	2	1	23	70	2494	-72.29014283040	42.92250546390
2495	9/4/2015 Sandt DOT	Hatched	Asphalt	Flat	Yes	Yes	No	Yes	Yes	132	1	2	1	23	70	2495	-72.29015523560	42.92237504160
2496	9/4/2015 Sandt DOT	Hatched	Asphalt	Flat	Yes	Yes	No	Yes	Yes	132	0	1	1	23	70	2496	-72.29010351910	42.92228084140
2497	9/4/2015 Sandt DOT	Hatched	Asphalt	Flat	Yes	Yes	No	Yes	Yes	132	2	3	1	23	70	2497	-72.29083844440	42.92199904240
2498	9/4/2015 Sandt DOT	Hatched	Asphalt	Flat	Yes	Yes	No	Yes	Yes	112	3	2	1	33	56	2498	-72.29099430600	42.92206653960
2499	9/4/2015 Sandt DOT	Hatched	Asphalt	Flat	Yes	Yes	No	Yes	Yes	112	2	2	1	23	70	2499	-72.29111203000	42.92210913710
2500	9/4/2015 Sandt DOT	Hatched	Asphalt	Flat	Yes	Yes	No	Yes	Yes	112	1	2	1	23	70	2500	-72.29151723490	42.92239146900
2501	9/4/2015 Sandt DOT	Hatched	Asphalt	Flat	Yes	Yes	No	Yes	Yes	120	2	1	1	23	70	2501	-72.29146809300	42.92251734570
2502	9/4/2015 Sandt DOT	Hatched	Asphalt	Flat	Yes	Yes	No	Yes	Yes	120	1	1	1	23	70	2502	-72.29143598620	42.92262191570
2503	9/4/2015 Sandt DOT	Hatched	Asphalt	Flat	Yes	Yes	No	Yes	Yes	112	1	3	1	23	70	2503	-72.29145577210	42.92271590520
2504	9/4/2015 Sandt DOT	Hatched	Asphalt	Flat	Yes	Yes	No	Yes	Yes	132	2	2	1	23	70	2504	-72.29071992400	42.92297207400
2505	9/4/2015 Sandt DOT	Hatched	Asphalt	Flat	Yes	Yes	No	Yes	Yes	132	1	1	1	23	70	2505	-72.29060546960	42.92292600520
2506	9/4/2015 Sandt DOT	Hatched	Asphalt	Flat	Yes	Yes	No	Yes	Yes	132	1	1	1	23	70	2506	-72.29047383150	42.92285978830
2507	9/4/2015 Sandt DOT	Parallel	Asphalt	Flat	Yes	No	No	No	No	80	2	2	1	29	62	2507	-72.20996900470	42.90568678090
2508	9/4/2015 Sandt DOT	Parallel	Asphalt	Flat	Yes	No	No	No	No	112	1	0	1	29	62	2508	-72.21092462000	42.90675776050
2509	9/4/2015 Sandt DOT	Parallel	Asphalt	Flat	Yes	No	No	Yes	No	64	1	0	1	53	29	2509	-72.21428260570	42.90767855630
2510	9/4/2015 Sandt DOT	Parallel Filled	Asphalt	Flat	Yes	No	No	No	Yes	120	2	4	1	27	64	2510	-72.21088610620	42.90656113170
2511	9/4/2015 Sandt DOT	Parallel	Asphalt	Flat	Yes	No	No	No	Yes	80	2	2	1	27	64	2511	-72.21058688750	42.90616824860
2512	9/4/2015 Sandt DOT	Parallel	Asphalt	Flat	Yes	No	No	Yes	Yes	80	2	4	1	26	66	2512	-72.21061220630	42.90606992200
2513	9/4/2015 Sandt DOT	Parallel	Asphalt	Flat	Yes	No	No	No	Yes	80	2	2	1	27	64	2513	-72.20943387170	42.90495194190
2514	9/4/2015 Sandt DOT	Parallel	Asphalt	Flat	Yes	No	No	Yes	Yes	80	2	2	1	26	66	2514	-72.20945271400	42.90483580980
2515	9/4/2015 Sandt DOT	Parallel	Asphalt	Flat	Yes	No	No	Yes	Yes	80	2	2	1	26	66	2515	-72.20865072010	42.90416161800
2516	9/4/2015 Sandt DOT	Parallel	Asphalt	Flat	Yes	No	No	Yes	Yes	80	2	2	1	26	66	2516	-72.20861189080	42.90404943050
2517	9/4/2015 Sandt DOT	Parallel	Asphalt	Flat	Yes	No	No	No	No	64	0	8	1	64	14	2517	-72.20658206380	42.90207908850
2518	9/4/2015 Sandt DOT	Parallel	Asphalt	Flat	Yes	No	No	No	No	80	8	0	1	39	48	2518	-72.20648590520	42.90209366010
2519	9/4/2015 Sandt DOT	Parallel	Asphalt	Flat	Yes	No	No	No	No	80	5	1	1	39	48	2519	-72.20580474950	42.90317300250
2520	9/14/2015 Sandt DOT	Hatched	Asphalt	Flat	No	No	No	No	No	86	0	3	1	7	92	2520	-72.42455817270	43.23622518010
2521	9/14/2015 Sandt DOT	Hatched	Asphalt	Flat	No	No	No	No	No	60	7	4	1	42	44	2521	-72.42477857550	43.23615825050
2522	9/14/2015 Sandt DOT	Parallel	Asphalt	Flat	No	No	No	No	No	72	2	1	1	34	55	2522	-72.42423915820	43.23560749690
2523	9/14/2015 Sandt DOT	Parallel	Concrete	Flat	No	No	No	No	No	72	3	1	1	46	38	2523	-72.42429770510	43.23581578690
2524	9/14/2015 Sandt DOT	Parallel Filled	Asphalt	Flat	No	No	No	No	No	82	3	0	1	19	75	2524	-72.42405035550	43.23469604830
2525	9/14/2015 Sandt DOT	Hatched	Asphalt	Flat	No	No	No	No	No	86	0	3	1	7	92	2525	-72.42425580290	43.23496114780
2526	9/14/2015 Sandt DOT	Parallel	Asphalt	Flat	No	No	No	No	No	82	1	0	1	9	89	2526	-72.42382900720	43.23354494250
2527	9/14/2015 Sandt DOT	Parallel	Asphalt	Flat	No	No	No	No	No	80	1	4	1	9	89	2527	-72.42348444340	43.23199626500
2528	9/14/2015 Sandt DOT	Hatched	Asphalt	Flat	No	No	No	No	No	86	0	3	1	7	92	2528	-72.42363285230	43.23214336100
2529	9/14/2015 Sandt DOT	Hatched	Asphalt	Flat	No	No	No	No	No	86	0	3	1	7	92	2529	-72.42329942070	43.23063863770
2530	9/14/2015 Sandt DOT	Hatched	Asphalt	Flat	No	No	No	No	No	86	0	3	1	7	92	2530	-72.42351093770	43.23064094660
2531	9/14/2015 Sandt DOT	Hatched	Asphalt	Flat	No	No	No	No	No	86	0	3	1	7	92	2531	-72.42412365860	43.23428483490
2532	9/14/2015 Sandt DOT	Hatched	Asphalt	Flat	No	No	No	No	No	86	0	0	1	7	92	2532	-72.42443512700	43.23453691810
2533	9/14/2015 Sandt DOT	Parallel	Asphalt	Flat	No	No	No	No	No	86	0	0	1	9	89	2533	-72.42459757160	43.23535812960
2534	9/14/2015 Sandt DOT	Hatched	Asphalt	Flat	No	No	No	No	No	86	0	3	1	7	92	2534	-72.42476699610	43.23723350310
2535	9/14/2015 Sandt DOT	Hatched	Asphalt	Flat	No	No	No	No	No	60	7	4	1	42	44	2535	-72.42500192340	43.23730130870
2536	9/14/2015 Sandt DOT	Hatched	Asphalt	Flat	No	No	No	No	No	86	0	3	1	7	92	2536	-72.42541215110	43.24044579360
2537	9/14/2015 Sandt DOT	Parallel	Asphalt	Flat	No	No	No	No	No	60	0	0	1	34	55	2537	-72.42473864890	43.23822545820
2538	9/14/2015 Sandt DOT	Parallel	Asphalt	Flat	No	No	No	No	No	60	0	0	1	34	55	2538	-72.42472090800	43.23795686030
2539	9/14/2015 Sandt DOT	Hatched	Asphalt	Flat	No	No	No	No	No	51	0	0	1	32	58	2539	-72.42457753590	43.23755098640
2540	9/14/2015 Sandt DOT	Parallel	Asphalt	Flat	Yes	No	No	No	Yes	96	2	1	1	27	64	2540	-72.38766887230	43.30968883130
2541	9/16/2015 Sandt DOT	Parallel Filled	Asphalt	Flat	No	No	No	No	No	96	1	4	1	9	89	2541	-72.17375360890	43.36484322110
2542	9/16/2015 Sandt DOT	Parallel	Asphalt	Flat	Yes	No	No	Yes	No	91	1	1	1	28	63	2542	-72.17483005220	43.36614996100
2543	9/16/2015 Sandt DOT	Parallel Filled	Asphalt	Flat	No	No	No	Yes	No	96	1	2	1	8	90	2543	-72.17420392660	43.36565733420
2544	9/16/2015 Sandt DOT	Parallel Filled	Asphalt	Flat	Yes	Yes	No	Yes	No	96	1	3	1	27	64	2544	-72.17342004640	43.36489462080
2545	9/16/2015 Sandt DOT	Parallel Filled	Asphalt	Flat	Yes	Yes	No	Yes	No	96	1	3	1	27	64	2545	-72.17326176640	43.36465325730
2546	9/16/2015 Sandt DOT	Parallel Filled	Asphalt	Flat	Yes	Yes	No	Yes	No	96	1	3	1	27	64	2546	-72.17315157130	43.36446083790
2547	9/16/2015 Sandt DOT	Parallel Filled	Asphalt	Flat	Yes	Yes	No	Yes	No	96	3	3	1	37	51	2547	-72.17290708110	43.36417075030
2548	9/16/2015 Sandt DOT	Parallel Filled	Asphalt	Flat	Yes	No	No	No	No	96	1	1	1	29	62	2548	-72.17293934850	43.36387427370
2549	9/17/2015 Sandt DOT	Parallel Filled	Asphalt	Flat	Yes	No	No	Yes	No	96	1	4	1	28	63	2549	-72.17575365670	43.36725085630
2550	9/17/2015 Sandt DOT	Parallel Filled	Asphalt	Flat	Yes	No	No	Yes	Yes	96	1	1	1	26	66	2550	-72.17568522360	43.36733462890
2551	9/17/2015 Sandt DOT	Parallel	Asphalt	Flat	Yes	No	No	Yes	No	84	5	2	1	38	49	2551	-72.17797947120	43.37114044000
2552	9/17/2015 Sandt DOT	Parallel Filled	Asphalt	Flat	Yes	No	No	Yes	No	65	4	3	1	63	15	2552	-72.17760435710	43.37022095780
2553	9/17/2015 Sandt DOT	Parallel Filled	Asphalt	Flat	Yes	No	No	Yes	No	96	1	2	1	28	63	2553	-72.17748539240	43.37027137600
2554	9/17/2015 Sandt DOT	Parallel	Asphalt	Flat	Yes	No	No	Yes	Yes	96	0	0	1	26	66	2554	-72.17862081220	43.37435339160
2555	9/17/2015 Sandt DOT	Parallel	Asphalt	Flat	Yes	No	No	Yes	Yes	96	0	0	1	26	66	2555	-72.17867422260	43.37423044210
2556	9/17/2015 Sandt DOT	Parallel	Asphalt	Flat	Yes	No	No	Yes	Yes	96	0	0	1	26	66	2556	-72.17879700860	43.37475705530
2557	9/17/2015 Sandt DOT	Parallel	Asphalt	Flat	Yes	No	No	No	Yes	96	0	4	1	27	64	2557	-72.17825320260	43.37302798060
2558	9/17/2015 Sandt DOT	Parallel Filled	Asphalt	Flat	Yes	No	No	No	Yes	96	1	2	1	27	64	2558	-72.17792800580	43.37161024290
2559	9/17/2015 Sandt DOT	Parallel Filled	Asphalt	Flat	Yes	No	No	No	Yes	96	1	2	1	27	64	2559	-72.17771277810	43.37087946620
2560	9/17/2015 Sandt DOT	Parallel Filled	Asphalt	Flat	Yes	No	No	No	Yes	96	1	2	1	27	64	2560	-72.17710723780	43.36905707540
2561	9/17/2015 Sandt DOT	Parallel Filled	Asphalt	Flat	Yes	No	No	No	Yes	96	1	2	1	27	64	2561	-72.17648452760	43.36818955200
2562	9/17/2015 Sandt DOT	Parallel Filled	Asphalt	Flat	Yes	No	No	No	Yes	96	1	2	1	27	64	2562	-72.17619373650	43.36786692490
2563	9/17/2015 Sandt DOT	Parallel Filled	Asphalt	Flat	Yes	No	No	No	Yes	96	1	13	1	37	51	2563	-72.17522256170	43.36684711380
2564	9/17/2015 Sandt DOT	Parallel Filled	Asphalt	Flat	Yes	No	No	Yes	No	84	1	2	1	28	63	2564	-72.17317131960	43.36504448920
2565	9/17/2015 Sandt DOT	Parallel Filled	Asphalt	Flat	Yes	Yes	No	No	No	96	0	4	1	28	63	2565	-72.17247325140	43.36361524340
2566	9/17/2015 Sandt DOT	Parallel Filled	Asphalt	Flat	Yes	Yes	No	No	No	96	3	2	1	38	49	2566	-72.17230584440	43.36362811720
2567	9/17/2015 Sandt DOT	Parallel Filled	Asphalt	Flat	Yes	No	No	Yes	No	72	2	4	1	53	29	2567	-72.17187723570	43.36297921140
2568	9/17/2015 Sandt DOT	Parallel Filled	Asphalt	Flat	Yes	No	No	Yes	No	72	2	4	1	53	29	2568	-72.17143579130	43.36232005730
2569	9/17/2015 Sandt DOT	Parallel Filled	Asphalt	Flat	Yes	Yes	No	No	No	96	0	4	1	28	63	2569	-72.17183884580	43.36272717200
2570	9/17/2015 Sandt DOT	Parallel	Asphalt	Flat	No	No	No	Yes	Yes	84	3	4	1	16	79	2570	-72.17116699530	43.36203691800
2571	9/17/2015 Sandt DOT	Parallel	Asphalt	Flat	No	No	No	Yes	Yes	84	7	4	1	16	79	2571	-72.17127609150	43.36191058330
2572	9/17/2015 Sandt DOT	Parallel	Asphalt	Flat	No	No	No	Yes	Yes	84	3	4	1	16	79	2572	-72.17150972140	43.36199795710
2573	9/17/2015 Sandt DOT	Parallel	Asphalt	Flat	Yes	No	No	No	No	96	2	1	1	29	62	2573	-72.17190963190	43.36277492340
2574	9/18/2015 Sandt DOT	Parallel	Asphalt	Flat	Yes	No	No	Yes	No	84	11	1	1	38	49	2574	-72.16944943420	43.35761132320
2575	9/18/2015 Sandt DOT	Parallel	Asphalt	Flat	Yes	No	No	Yes	No	84	9	1	1	38	49	2575	-72.17049587150	43.36058822610
2576	9/18/2015 Sandt DOT	Parallel	Asphalt	Flat	No	No	No	No	No	96	0	15	1	19	75	2576	-72.17043804400	43.36023358470
2577	9/18/2015 Sandt DOT	Parallel	Asphalt	Flat	Yes	No	No	Yes	No	84	3	3	1	38	49	2577	-72.16928688100	43.36090330900

2578	9/18/2015 Sandt DOT	Parallel	Asphalt	Flat	Yes	No	No	Yes	No	84	3	3	1	38	49	2578	-72.16900753330	43.36044590890
2579	9/17/2015 Sandt DOT	Parallel	Asphalt	Flat	No	No	No	Yes	Yes	84	7	4	1	16	79	2579	-72.17138826570	43.36212226410
2580	9/18/2015 Sandt DOT	Parallel Filled	Asphalt	Flat	Yes	No	No	Yes	Yes	80	1	2	1	26	66	2580	-72.25573168140	43.54523550270
2581	9/18/2015 Sandt DOT	Parallel Filled	Asphalt	Flat	Yes	No	No	Yes	Yes	80	3	2	1	36	52	2581	-72.25575234250	43.54532070460
2582	9/18/2015 Sandt DOT	Parallel Filled	Asphalt	Flat	Yes	No	No	Yes	Yes	80	1	0	1	26	66	2582	-72.25564530630	43.54536387170
2583	9/18/2015 Sandt DOT	Parallel Filled	Asphalt	Flat	Yes	No	No	Yes	Yes	80	5	3	1	36	52	2583	-72.25807029550	43.54637636460
2584	9/18/2015 Sandt DOT	Parallel Filled	Asphalt	Flat	Yes	No	No	Yes	Yes	264	12	5	1	36	52	2584	-72.25722618590	43.54597049470
2585	9/21/2015 Sandt DOT	Hatched	Asphalt	Flat	Yes	No	No	Yes	No	48	6	1	1	61	18	2585	-72.27205263030	43.72116848590
2586	9/21/2015 Sandt DOT	Hatched	Asphalt	Flat	Yes	Yes	No	Yes	Yes	48	2	1	1	48	36	2586	-72.27392095600	43.71836740050
2587	9/21/2015 Sandt DOT	Hatched	Asphalt	Flat	Yes	No	No	Yes	Yes	48	1	0	1	49	34	2587	-72.27322898760	43.71919209610
2588	9/21/2015 Sandt DOT	Hatched	Asphalt	Flat	Yes	No	No	Yes	Yes	48	1	0	1	49	34	2588	-72.27155866160	43.72187983120
2589	9/21/2015 Sandt DOT	Hatched	Asphalt	Flat	Yes	No	No	Yes	Yes	72	1	0	1	49	34	2589	-72.27082361930	43.72330308370
2590	9/22/2015 Sandt DOT	Parallel	Asphalt	Flat	Yes	No	No	Yes	Yes	84	1	0	1	26	66	2590	-71.07358566640	43.02568537450
2591	9/22/2015 Sandt DOT	Parallel	Asphalt	Flat	Yes	No	No	Yes	Yes	84	1	3	1	26	66	2591	-71.07381594370	43.02582159870
2592	9/22/2015 Sandt DOT	Parallel	Asphalt	Flat	Yes	No	No	No	Yes	84	0	2	1	27	64	2592	-71.07398140240	43.02743311800
2593	9/22/2015 Sandt DOT	Parallel	Asphalt	Flat	Yes	No	No	Yes	Yes	84	1	0	1	26	66	2593	-71.07391477240	43.02719644460
2594	9/22/2015 Sandt DOT	Parallel	Asphalt	Flat	Yes	No	No	Yes	Yes	84	1	0	1	26	66	2594	-71.07402004320	43.02574544990
2595	9/22/2015 Sandt DOT	Parallel	Asphalt	Flat	Yes	No	No	No	No	56	5	3	1	64	14	2595	-71.07405600120	43.02425601260
2596	9/22/2015 Sandt DOT	Parallel Filled	Asphalt	Flat	Yes	No	No	No	No	80	2	4	1	29	62	2596	-71.07257911670	43.03822973720
2597	9/22/2015 Sandt DOT	Hatched	Asphalt	Flat	Yes	No	No	No	Yes	80	2	5	1	25	67	2597	-71.07253438760	43.03827270420
2598	9/22/2015 Sandt DOT	Hatched	Asphalt	Flat	Yes	No	No	Yes	Yes	80	5	1	1	34	55	2598	-71.07325400370	43.03836132240
2599	9/22/2015 Sandt DOT	Hatched	Asphalt	Flat	Yes	No	No	Yes	Yes	80	0	11	1	34	55	2599	-71.07334626440	43.03842064660
2600	9/23/2015 Sandt DOT	Hatched	Asphalt	Retroreflective	No	No	No	Yes	No	48	3	2	1	39	48	2600	-72.28991787480	43.69675135890
2601	9/23/2015 Sandt DOT	Hatched	Asphalt	Retroreflective	No	No	No	Yes	No	48	1	9	1	39	48	2601	-72.28991746830	43.69827655050
2602	9/23/2015 Sandt DOT	Hatched	Asphalt	Retroreflective	No	No	No	Yes	No	48	6	5	1	39	48	2602	-72.28981857620	43.69729330550
2603	9/23/2015 Sandt DOT	Parallel	Asphalt	Flat	Yes	Yes	No	Yes	Yes	60	1	2	1	50	33	2603	-72.26148753480	43.67433954630
2604	9/24/2015 Sandt DOT	Hatched	Asphalt	Retroreflective	Yes	No	No	Yes	Yes	84	2	0	1	22	71	2604	-72.31983548500	43.63193005180
2605	9/24/2015 Sandt DOT	Hatched	Asphalt	Retroreflective	Yes	No	No	No	Yes	84	2	0	1	23	70	2605	-72.32082254540	43.63106466010
2606	9/24/2015 Sandt DOT	Hatched	Asphalt	Retroreflective	Yes	No	No	No	Yes	84	2	0	1	23	70	2606	-72.32063066910	43.63121969800
2607	9/24/2015 Sandt DOT	Hatched	Asphalt	Retroreflective	Yes	No	No	No	Yes	84	2	0	1	23	70	2607	-72.32010613020	43.63115227150
2608	9/24/2015 Sandt DOT	Hatched	Asphalt	Retroreflective	Yes	No	No	Yes	Yes	84	2	0	1	22	71	2608	-72.31934575890	43.63189744530
2609	9/24/2015 Sandt DOT	Hatched	Asphalt	Retroreflective	Yes	No	No	Yes	Yes	84	2	0	1	22	71	2609	-72.31917510720	43.63201919810
2610	9/24/2015 Sandt DOT	Hatched	Asphalt	Flat	Yes	No	No	Yes	Yes	84	2	8	1	34	55	2610	-72.14398272390	43.64441518940
2611	9/24/2015 Sandt DOT	Hatched	Asphalt	Flat	Yes	No	No	Yes	Yes	84	4	3	1	34	55	2611	-72.14400736820	43.64430168100
2612	9/24/2015 Sandt DOT	Hatched	Asphalt	Flat	Yes	No	No	Yes	Yes	84	1	3	1	24	68	2612	-72.14385829060	43.64435387640
2613	9/24/2015 Sandt DOT	Parallel Filled	Asphalt	Flat	No	No	No	No	No	84	1	4	1	9	89	2613	-72.14447380330	43.64282039240
2614	9/24/2015 Sandt DOT	Parallel	Asphalt	Flat	No	No	No	No	No	80	6	9	1	29	62	2614	-72.14497061440	43.64203642600
2615	9/24/2015 Sandt DOT	Parallel	Asphalt	Flat	No	No	No	No	No	80	6	1	1	19	75	2615	-72.14496705230	43.64195455550
2616	9/24/2015 Sandt DOT	Parallel	Asphalt	Flat	No	No	No	No	No	80	2	5	1	9	89	2616	-72.14519147780	43.64189066450
2617	9/24/2015 Sandt DOT	Parallel	Asphalt	Flat	No	No	No	Yes	No	80	18	3	1	18	77	2617	-72.14517519180	43.64195441350
2618	9/24/2015 Sandt DOT	Parallel	Asphalt	Flat	Yes	No	No	Yes	No	80	15	4	1	38	49	2618	-72.14667619990	43.64136001440
2619	9/24/2015 Sandt DOT	Parallel	Asphalt	Flat	Yes	No	No	Yes	No	80	7	6	1	48	36	2619	-72.14419499080	43.64157501380
2620	9/24/2015 Sandt DOT	Hatched	Asphalt	Flat	Yes	No	No	No	Yes	72	2	2	1	50	33	2620	-72.14686200820	43.64262638000
2621	9/24/2015 Sandt DOT	Hatched	Asphalt	Flat	Yes	No	No	No	Yes	72	2	2	1	50	33	2621	-72.14604707370	43.64317510600
2622	9/24/2015 Sandt DOT	Parallel Filled	Asphalt	Flat	Yes	No	No	Yes	No	72	1	1	1	53	29	2622	-72.01180898860	43.64635310820
2623	9/24/2015 Sandt DOT	Parallel Filled	Asphalt	Flat	Yes	No	No	Yes	No	72	1	1	1	53	29	2623	-72.01167518870	43.64642074960
2624	9/24/2015 Sandt DOT	Parallel Filled	Asphalt	Flat	Yes	No	No	Yes	No	72	1	1	1	53	29	2624	-72.01192318280	43.64641437040
2625	9/24/2015 Sandt DOT	Parallel Filled	Asphalt	Flat	Yes	No	No	Yes	No	72	1	1	1	53	29	2625	-72.01104721240	43.64653620660
2626	9/24/2015 Sandt DOT	Parallel Filled	Asphalt	Flat	Yes	No	No	Yes	No	72	1	1	1	53	29	2626	-72.00996803590	43.64647091410
2627	9/24/2015 Sandt DOT	Parallel Filled	Asphalt	Flat	Yes	No	No	Yes	No	72	0	2	1	53	29	2627	-72.01077100600	43.64644006690
2628	9/25/2015 Sandt DOT	Parallel	Asphalt	Flat	Yes	Yes	No	Yes	No	80	1	3	1	27	64	2628	-71.03042506670	43.01784916170
2629	9/25/2015 Sandt DOT	Parallel	Asphalt	Flat	Yes	Yes	No	No	No	80	2	1	1	28	63	2629	-71.03033364790	43.01786264620
2630	9/25/2015 Sandt DOT	Parallel	Asphalt	Flat	Yes	Yes	No	No	No	68	5	4	1	63	15	2630	-71.03412424180	43.01407093130
2631	9/28/2015 Sandt DOT	Parallel Filled	Asphalt	Flat	Yes	No	No	No	No	86	2	4	1	29	62	2631	-71.06743186710	43.38868953680
2632	9/28/2015 Sandt DOT	Parallel	Asphalt	Flat	Yes	No	No	No	No	82	0	0	1	29	62	2632	-71.07219377920	43.38833739310
2633	9/28/2015 Sandt DOT	Parallel	Asphalt	Retroreflective	No	No	No	Yes	No	82	2	0	1	6	93	2633	-71.06506760320	43.38960636930
2634	9/28/2015 Sandt DOT	Hatched	Asphalt	Retroreflective	No	No	No	Yes	No	82	1	3	1	4	96	2634	-71.06500622820	43.38972695430
2635	9/28/2015 Sandt DOT	Parallel Filled	Asphalt	Flat	Yes	No	No	No	No	82	2	1	1	29	62	2635	-71.06494953640	43.38982175990
2636	9/28/2015 Sandt DOT	Parallel Filled	Asphalt	Flat	Yes	No	No	Yes	No	77	1	6	1	38	49	2636	-71.06508398030	43.39050797770
2637	9/28/2015 Sandt DOT	Parallel Filled	Asphalt	Flat	Yes	No	No	Yes	No	92	1	6	1	38	49	2637	-71.06503015810	43.39057983340
2638	9/28/2015 Sandt DOT	Parallel Filled	Asphalt	Flat	Yes	No	No	Yes	No	77	0	5	1	28	63	2638	-71.06509016200	43.39083449840
2639	9/28/2015 Sandt DOT	Parallel Filled	Asphalt	Flat	Yes	No	No	Yes	No	65	4	3	1	63	15	2639	-71.06505528580	43.39131130540
2640	9/28/2015 Sandt DOT	Parallel Filled	Asphalt	Flat	Yes	No	No	No	No	65	4	1	1	64	14	2640	-71.06510431370	43.39216686940
2641	9/28/2015 Sandt DOT	Parallel Filled	Asphalt	Flat	Yes	No	No	No	No	65	3	8	1	74	0	2641	-71.06536455450	43.39369019100
2642	9/28/2015 Sandt DOT	Parallel Filled	Asphalt	Flat	Yes	No	No	Yes	Yes	77	6	10	1	46	38	2642	-71.06536233970	43.39329605550
2643	9/28/2015 Sandt DOT	Hatched	Asphalt	Retroreflective	No	No	No	Yes	No	82	1	3	1	4	96	2643	-71.06486710970	43.38947752600
2644	9/28/2015 Sandt DOT	Hatched	Asphalt	Retroreflective	No	No	No	Yes	No	82	1	3	1	4	96	2644	-71.06463503290	43.38881866280
2645	9/28/2015 Sandt DOT	Parallel Filled	Asphalt	Flat	Yes	No	No	No	No	82	2	1	1	29	62	2645	-71.06471696890	43.38876633070
2646	9/28/2015 Sandt DOT	Parallel Filled	Asphalt	Flat	Yes	No	No	No	No	82	2	1	1	29	62	2646	-71.06290823790	43.38774812070
2647	9/28/2015 Sandt DOT	Parallel Filled	Asphalt	Flat	Yes	No	No	No	No	82	2	1	1	29	62	2647	-71.06186687010	43.38747494650
2648	9/28/2015 Sandt DOT	Parallel Filled	Asphalt	Flat	Yes	No	No	Yes	No	58	3	3	1	63	15	2648	-71.06027249820	43.38709147800
2649	9/28/2015 Sandt DOT	Parallel Filled	Asphalt	Flat	Yes	No	No	Yes	No	58	0	1	1	53	29	2649	-71.05697168830	43.38644961700
2650	9/28/2015 Sandt DOT	Parallel Filled	Asphalt	Flat	Yes	No	No	Yes	No	58	0	4	1	53	29	2650	-71.05517534930	43.38539908630
2651	9/28/2015 Sandt DOT	Parallel Filled	Asphalt	Flat	Yes	No	No	Yes	No	58	1	3	1	53	29	2651	-71.05305329910	43.38381622460
2652	9/28/2015 Sandt DOT	Parallel Filled	Asphalt	Retroreflective	No	No	No	No	Yes	79	3	5	1	15	81	2652	-70.98867240310	43.40840910720
2653	9/28/2015 Sandt DOT	Parallel Filled	Asphalt	Retroreflective	No	No	No	No	Yes	65	8	5	1	40	47	2653	-70.98858942270	43.40978394760
2654	9/29/2015 Sandt DOT	Hatched	Asphalt	Flat	No	No	No	No	Yes	84	0	4	1	5	95	2654	-70.94859768680	43.14160306150
2655	9/29/2015 Sandt DOT	Parallel Filled	Brick	Flat	Yes	No	No	Yes	Yes	132	2	1	1	32	58	2655	-70.93667510980	43.13910863960
2656	9/29/2015 Sandt DOT	Parallel Filled	Brick	Flat	Yes	No	No	Yes	Yes	132	4	5	1	42	44	2656	-70.93526095150	43.13841852760
2657	9/29/2015 Sandt DOT	Parallel Filled	Brick	Flat	Yes	No	No	Yes	Yes	132	2	4	1	32	58	2657	-70.93510680340	43.13841448880
2658	9/29/2015 Sandt DOT	Parallel Filled	Brick	Flat	Yes	No	No	Yes	Yes	132	5	2	1	42	44	2658	-70.93423107420	43.13797180250
2659	9/29/2015 Sandt DOT	Parallel Filled	Brick	Flat	Yes	No	No	Yes	Yes	132	4	5	1	42	44	2659	-70.93444274730	43.13807410710
2660	9/29/2015 Sandt DOT	Parallel Filled	Brick	Flat	Yes	No	No	Yes	Yes	132	3	4	1	42	44	2660	-70.93439051570	43.13793068010
2661	9/29/2015 Sandt DOT	Parallel	Asphalt	Flat	Yes	No	No	Yes	Yes	108	4	5	1	36	52	2661	-70.93433416130	43.13801994630
2662	9/29/2015 Sandt DOT	Parallel	Asphalt	Flat	Yes	No	No	Yes	Yes	108	4	5	1	36	52	2662	-70.93433691040	43.13800490120
2663	9/29/2015 Sandt DOT	Parallel Filled	Brick	Flat	Yes	No	No	Yes	Yes	132	3	1	1	42	44	2663	-70.93335948110	43.13753751990
2664	9/29/2015 Sandt DOT	Parallel Filled	Brick	Flat	Yes	No	No	Yes	Yes	132	3	1	1	42	44	2664	-70.93354916320	43.13763480960
2665	9/29/2015 Sandt DOT	Parallel Filled	Brick	Flat	Yes	No	No	Yes	Yes	132	2	1	1	32	58	2665	-70.93339934220	43.13765888190
2666	9/29/2015 Sandt DOT	Parallel Filled	Brick	Flat	Yes	No	No	Yes	Yes	132	1	1	1	32	58	2666	-70.93220192210	43.13699851340

2667	9/29/2015 Sandt DOT	Parallel Filled	Brick	Flat	Yes	No	No	Yes	Yes	132	0	0	1	32	58	2667	-70.93113114350	43.13644188700
2668	9/29/2015 Sandt DOT	Parallel Filled	Brick	Flat	Yes	No	No	Yes	Yes	132	0	0	1	32	58	2668	-70.93091093950	43.13629910000
2669	9/29/2015 Sandt DOT	Parallel Filled	Brick	Flat	Yes	No	No	Yes	Yes	132	1	1	1	32	58	2669	-70.93097719290	43.13644042280
2670	9/29/2015 Sandt DOT	Hatched	Asphalt	Flat	Yes	No	No	No	No	80	2	6	1	37	51	2670	-70.93028599400	43.13583468530
2671	9/29/2015 Sandt DOT	Parallel	Asphalt	Flat	Yes	No	No	No	Yes	93	0	2	1	27	64	2671	-71.14937301340	43.19388179700
2672	9/30/2015 Sandt DOT	Hatched	Asphalt	Flat	Yes	No	No	Yes	Yes	72	1	1	1	49	34	2672	-71.12989100540	44.05574107260
2673	9/30/2015 Sandt DOT	Hatched	Asphalt	Flat	Yes	No	No	Yes	Yes	72	1	1	1	49	34	2673	-71.13008118370	44.05566871450
2674	9/30/2015 Sandt DOT	Hatched	Asphalt	Flat	Yes	No	No	Yes	Yes	72	1	3	1	49	34	2674	-71.12991689840	44.05564654680
2675	10/1/2015 Sandt DOT	Parallel	Asphalt	Flat	Yes	No	No	Yes	Yes	96	1	1	1	26	66	2675	-71.14928824430	43.19376487990
2676	10/1/2015 Sandt DOT	Parallel	Asphalt	Flat	Yes	No	No	Yes	Yes	93	3	3	1	36	52	2676	-71.14910843080	43.19382247080
2677	10/1/2015 Sandt DOT	Parallel	Asphalt	Flat	Yes	No	No	Yes	Yes	96	1	2	1	26	66	2677	-71.14916340360	43.19394610700
2678	10/1/2015 Sandt DOT	Parallel	Asphalt	Flat	Yes	No	No	No	No	108	1	0	1	29	62	2678	-70.99356850090	43.31147660780
2679	10/1/2015 Sandt DOT	Parallel	Asphalt	Flat	Yes	No	No	Yes	Yes	108	0	0	1	26	66	2679	-70.99406268860	43.31225990440
2680	10/1/2015 Sandt DOT	Parallel	Asphalt	Flat	Yes	No	No	Yes	Yes	108	1	2	1	26	66	2680	-70.99395065020	43.31245642530
2681	10/1/2015 Sandt DOT	Parallel	Asphalt	Flat	Yes	No	No	No	Yes	108	4	2	1	37	51	2681	-70.99289281730	43.31071519540
2682	10/1/2015 Sandt DOT	Parallel	Asphalt	Flat	Yes	No	No	No	Yes	108	1	3	1	27	64	2682	-70.99262727150	43.31071285940
2683	10/1/2015 Sandt DOT	Parallel Filled	Asphalt	Flat	Yes	No	No	No	Yes	84	1	7	1	37	51	2683	-70.99073977720	43.30949432730
2684	10/1/2015 Sandt DOT	Parallel Filled	Asphalt	Flat	Yes	No	No	No	Yes	84	1	1	1	27	64	2684	-70.99063248540	43.30934928780
2685	10/1/2015 Sandt DOT	Parallel Filled	Asphalt	Flat	Yes	No	No	No	Yes	84	4	3	1	37	51	2685	-70.98985732550	43.30897984950
2686	10/1/2015 Sandt DOT	Parallel Filled	Asphalt	Flat	Yes	No	No	No	Yes	84	4	3	1	37	51	2686	-70.98868167650	43.30823255660
2687	10/1/2015 Sandt DOT	Parallel Filled	Asphalt	Flat	Yes	No	No	No	No	72	1	3	1	54	27	2687	-70.98776381090	43.30777885280
2688	10/1/2015 Sandt DOT	Parallel Filled	Asphalt	Flat	Yes	No	No	Yes	No	72	1	3	1	53	29	2688	-70.98733483560	43.30746375530
2689	10/1/2015 Sandt DOT	Parallel Filled	Asphalt	Flat	Yes	No	No	Yes	No	72	1	3	1	53	29	2689	-70.98669821480	43.30710625150
2690	10/1/2015 Sandt DOT	Parallel Filled	Asphalt	Flat	Yes	No	No	Yes	Yes	84	4	3	1	36	52	2690	-70.98689294020	43.30710615950
2691	10/1/2015 Sandt DOT	Parallel Filled	Asphalt	Flat	Yes	No	No	Yes	Yes	84	1	1	1	26	66	2691	-70.98442307240	43.30556319580
2692	10/1/2015 Sandt DOT	Parallel Filled	Asphalt	Flat	Yes	No	No	No	Yes	84	4	3	1	37	51	2692	-70.98591782530	43.30644458360
2693	10/1/2015 Sandt DOT	Parallel Filled	Asphalt	Flat	Yes	No	No	No	Yes	84	4	3	1	37	51	2693	-70.98522918720	43.30606693170
2694	10/1/2015 Sandt DOT	Parallel Filled	Asphalt	Flat	Yes	No	No	Yes	No	72	1	3	1	53	29	2694	-70.98623703860	43.30653709700
2695	10/1/2015 Sandt DOT	Parallel Filled	Asphalt	Flat	Yes	No	No	Yes	No	72	1	3	1	53	29	2695	-70.98721645650	43.30719003380
2697	10/1/2015 Sandt DOT	Parallel Filled	Asphalt	Flat	Yes	No	No	Yes	No	72	1	3	1	53	29	2697	-70.99009871040	43.30904849630
2698	10/2/2015 Sandt DOT	Parallel Filled	Asphalt	Flat	No	No	No	No	No	84	1	1	1	9	89	2698	-70.98080787330	43.30531263930
2699	10/2/2015 Sandt DOT	Parallel Filled	Asphalt	Flat	No	No	No	No	No	84	1	1	1	9	89	2699	-70.98069190700	43.30539219110
2700	10/2/2015 Sandt DOT	Parallel Filled	Asphalt	Flat	No	No	No	No	No	84	1	1	1	9	89	2700	-70.98056960220	43.30525973070
2701	10/2/2015 Sandt DOT	Parallel Filled	Asphalt	Flat	No	No	No	Yes	No	84	2	2	1	8	90	2701	-70.98200585700	43.30515004550
2702	10/2/2015 Sandt DOT	Parallel Filled	Asphalt	Flat	No	No	No	Yes	No	84	2	2	1	8	90	2702	-70.98209565860	43.30523510040
2703	10/2/2015 Sandt DOT	Parallel Filled	Asphalt	Flat	No	No	No	Yes	No	68	1	2	1	33	56	2703	-70.98373345100	43.30536652020
2704	10/2/2015 Sandt DOT	Parallel Filled	Asphalt	Flat	No	No	No	Yes	No	80	1	2	1	8	90	2704	-70.98436371970	43.30527230650
2705	10/2/2015 Sandt DOT	Parallel Filled	Asphalt	Flat	No	No	No	Yes	No	80	1	2	1	8	90	2705	-70.98448241640	43.30534702610
2706	10/2/2015 Sandt DOT	Parallel Filled	Asphalt	Flat	No	No	No	Yes	No	84	2	2	1	8	90	2706	-70.98122273570	43.30537662340
2707	10/2/2015 Sandt DOT	Parallel Filled	Asphalt	Flat	Yes	No	No	Yes	Yes	84	3	2	1	36	52	2707	-70.97826438740	43.30494685270
2708	10/2/2015 Sandt DOT	Parallel Filled	Asphalt	Flat	Yes	No	No	Yes	Yes	84	1	4	1	26	66	2708	-70.97815533640	43.30481571840
2709	10/2/2015 Sandt DOT	Parallel Filled	Asphalt	Flat	Yes	No	No	Yes	Yes	84	3	1	1	36	52	2709	-70.97829828930	43.30478481020
2710	10/2/2015 Sandt DOT	Parallel Filled	Asphalt	Flat	Yes	No	No	Yes	Yes	84	0	2	1	26	66	2710	-70.97839051000	43.30491719060
2711	10/2/2015 Sandt DOT	Parallel Filled	Asphalt	Flat	No	No	No	Yes	No	84	2	2	1	8	90	2711	-70.97919631430	43.30522603520
2712	10/2/2015 Sandt DOT	Parallel Filled	Asphalt	Flat	Yes	No	No	Yes	Yes	96	3	1	1	36	52	2712	-70.97692738750	43.28815348000
2713	10/2/2015 Sandt DOT	Parallel	Asphalt	Flat	Yes	No	No	No	No	70	0	2	1	54	27	2713	-70.97919366310	43.28397044650
2714	10/5/2015 Sandt DOT	Parallel	Asphalt	Flat	Yes	No	No	Yes	Yes	72	0	5	1	51	32	2714	-70.98073417270	43.27825139540
2715	10/5/2015 Sandt DOT	Parallel	Asphalt	Flat	Yes	No	No	No	No	72	0	2	1	54	27	2715	-70.98023576670	43.27982079930
2716	10/5/2015 Sandt DOT	Parallel	Asphalt	Flat	Yes	No	No	Yes	Yes	72	0	2	1	51	32	2716	-70.97970401850	43.28146199730
2717	10/5/2015 Sandt DOT	Parallel	Asphalt	Flat	Yes	No	No	Yes	Yes	72	0	2	1	51	32	2717	-70.97962740190	43.28164809860
2718	10/5/2015 Sandt DOT	Parallel Filled	Asphalt	Flat	Yes	No	No	Yes	No	84	2	6	1	38	49	2718	-70.99060013570	43.29871810330
2719	10/5/2015 Sandt DOT	Parallel Filled	Asphalt	Flat	Yes	No	No	Yes	Yes	84	2	5	1	26	66	2719	-70.99139229280	43.29803090970
2720	10/5/2015 Sandt DOT	Parallel Filled	Asphalt	Flat	Yes	No	No	Yes	Yes	84	4	2	1	36	52	2720	-70.99140859220	43.29785530270
2721	10/5/2015 Sandt DOT	Parallel	Asphalt	Flat	Yes	Yes	No	Yes	No	108	0	2	1	27	64	2721	-70.99300394130	43.29655382010
2722	10/5/2015 Sandt DOT	Parallel	Asphalt	Flat	Yes	Yes	No	Yes	No	108	2	0	1	27	64	2722	-70.99318908330	43.29646844050
2723	10/5/2015 Sandt DOT	Parallel	Asphalt	Flat	Yes	Yes	No	Yes	Yes	108	2	2	1	25	67	2723	-70.99471486310	43.29518939180
2724	10/5/2015 Sandt DOT	Parallel	Asphalt	Flat	Yes	Yes	No	No	No	108	5	3	1	38	49	2724	-70.99491783830	43.29502867430
2725	10/5/2015 Sandt DOT	Parallel Filled	Asphalt	Flat	Yes	No	No	Yes	No	84	3	3	1	38	49	2725	-70.99076666380	43.29878095780
2726	10/5/2015 Sandt DOT	Parallel Filled	Asphalt	Flat	Yes	No	No	Yes	No	60	7	4	1	63	15	2726	-70.82555885000	43.23443574840
2727	10/5/2015 Sandt DOT	Parallel Filled	Asphalt	Flat	Yes	No	No	Yes	No	90	3	6	1	48	36	2727	-70.82477149600	43.23473781140
2728	10/5/2015 Sandt DOT	Parallel Filled	Asphalt	Flat	Yes	No	No	Yes	No	80	3	3	1	38	49	2728	-70.82202579390	43.23552057610
2729	10/5/2015 Sandt DOT	Parallel Filled	Asphalt	Flat	Yes	No	No	Yes	No	72	10	1	1	63	15	2729	-70.82082313510	43.23578712710
2730	10/5/2015 Sandt DOT	Parallel Filled	Asphalt	Flat	Yes	No	No	Yes	Yes	72	1	3	1	51	32	2730	-70.82097160520	43.23578602670
2731	10/5/2015 Sandt DOT	Parallel Filled	Asphalt	Flat	Yes	No	No	No	No	84	3	4	1	39	48	2731	-70.81861645450	43.23637467100
2732	10/5/2015 Sandt DOT	Parallel Filled	Asphalt	Flat	Yes	No	No	Yes	No	84	4	2	1	38	49	2732	-70.81851092600	43.23605251240
2733	10/5/2015 Sandt DOT	Parallel Filled	Asphalt	Flat	Yes	No	No	No	No	88	12	1	1	39	48	2733	-70.82004640710	43.23600779540
2734	10/5/2015 Sandt DOT	Parallel Filled	Asphalt	Flat	Yes	No	No	No	No	72	4	1	1	64	14	2734	-70.83347354600	43.23136095200
2735	10/5/2015 Sandt DOT	Parallel Filled	Asphalt	Flat	Yes	No	No	No	No	72	4	1	1	64	14	2735	-70.83140042950	43.23205370840
2736	10/5/2015 Sandt DOT	Parallel Filled	Asphalt	Flat	Yes	No	No	No	No	72	4	1	1	64	14	2736	-70.82959477770	43.23272234090
2737	10/5/2015 Sandt DOT	Parallel Filled	Asphalt	Flat	Yes	No	No	No	No	72	4	1	1	64	14	2737	-70.82859733140	43.23315889120
2738	10/5/2015 Sandt DOT	Parallel Filled	Asphalt	Flat	Yes	No	No	No	No	72	4	1	1	64	14	2738	-70.82748274850	43.23371494650
2739	10/6/2015 Sandt DOT	Parallel	Asphalt	Flat	Yes	No	No	No	No	60	4	1	1	64	14	2739	-70.89072544790	43.18343640090
2740	10/6/2015 Sandt DOT	Parallel	Asphalt	Flat	Yes	No	No	No	No	60	2	1	1	54	27	2740	-70.89053599130	43.18358904910
2741	10/6/2015 Sandt DOT	Parallel Filled	Asphalt	Retroreflective	No	No	No	No	No	104	3	3	1	17	78	2741	-70.88934041890	43.18326335740
2742	10/6/2015 Sandt DOT	Parallel	Asphalt	Flat	Yes	Yes	No	Yes	Yes	60	3	7	1	70	5	2742	-70.89019500970	43.18359760840
2743	10/6/2015 Sandt DOT	Parallel Filled	Asphalt	Flat	Yes	No	No	Yes	No	64	7	1	1	63	15	2743	-70.89295899150	43.18110527040
2744	10/6/2015 Sandt DOT	Parallel Filled	Asphalt	Flat	No	No	No	Yes	Yes	108	7	2	1	16	79	2744	-70.89069359710	43.16784615130
2745	10/6/2015 Sandt DOT	Parallel Filled	Asphalt	Flat	No	No	No	Yes	Yes	108	0	10	1	16	79	2745	-70.89088871960	43.16773468430
2746	10/7/2015 Sandt DOT	Parallel	Asphalt	Flat	Yes	Yes	No	No	Yes	84	1	2	1	26	66	2746	-70.84387762470	43.12838116190
2747	10/7/2015 Sandt DOT	Hatched	Asphalt	Flat	Yes	No	No	Yes	Yes	60	1	2	1	49	34	2747	-70.79405629740	43.09414858880
2748	10/7/2015 Sandt DOT	Hatched	Asphalt	Flat	Yes	No	No	Yes	Yes	60	2	1	1	49	34	2748	-70.79396594440	43.09431727420
2749	10/7/2015 Sandt DOT	Hatched	Asphalt	Flat	Yes	No	No	Yes	Yes	60	2	1	1	49	34	2749	-70.79430115160	43.09414570520
2750	10/7/2015 Sandt DOT	Hatched	Asphalt	Flat	Yes	No	No	Yes	Yes	60	1	2	1	49	34	2750	-70.79415423860	43.09431758400
2751	10/7/2015 Sandt DOT	Hatched	Asphalt	Flat	Yes	No	No	Yes	No	90	2	2	1	26	66	2751	-70.79780343470	43.09252723600
2752	10/7/2015 Sandt DOT	Hatched	Asphalt	Flat	Yes	No	No	Yes	No	90	2	2	1	26	66	2752	-70.79595644020	43.09327483880
2753	10/7/2015 Sandt DOT	Hatched	Asphalt	Flat	Yes	No	No	Yes	No	90	2	2	1	26	66	2753	-70.79518010850	43.09364498390
2754	10/8/2015 Sandt DOT	Parallel	Asphalt	Flat	No	No	No	Yes	No	96	1	1	1	8	90	2754	-70.91901619040	43.13402758930
2755	10/8/2015 Sandt DOT	Textured	Stamped Asphalt	Flat	Yes	No	No	Yes	Yes	96	4	2	1	42	44	2755	-70.92067752720	43.13299906390
2756	10/8/2015 Sandt DOT	Textured	Stamped Asphalt	Flat	Yes	No	No	Yes	No	96	3	2	1	44	41	2756	-70.92083154820	43.13290777980

2757	10/8/2015 Sandt DOT	Textured	Stamped Asphalt	Flat	Yes	No	No	Yes	Yes	96	2	3	1	32	58	2757	-70.92087068610	43.13301958140
2758	10/8/2015 Sandt DOT	Textured	Stamped Asphalt	Flat	Yes	No	No	Yes	Yes	96	2	3	1	32	58	2758	-70.92062883430	43.13313816790
2759	10/8/2015 Sandt DOT	Textured	Stamped Asphalt	Flat	Yes	No	No	Yes	No	96	2	3	1	34	55	2759	-70.92277724090	43.13327119080
2760	10/8/2015 Sandt DOT	Hatched	Asphalt	Flat	No	No	No	Yes	No	96	2	4	1	6	93	2760	-70.92289687280	43.13321761500
2761	10/8/2015 Sandt DOT	Hatched	Asphalt	Flat	No	No	No	Yes	Yes	96	3	4	1	14	82	2761	-70.92473241570	43.13379801830
2762	10/8/2015 Sandt DOT	Hatched	Asphalt	Flat	No	No	No	Yes	Yes	96	3	4	1	14	82	2762	-70.92467201950	43.13382610340
2763	10/8/2015 Sandt DOT	Hatched	Asphalt	Flat	No	No	No	Yes	Yes	96	4	3	1	14	82	2763	-70.92496063200	43.13377098510
2764	10/8/2015 Sandt DOT	Hatched	Asphalt	Flat	No	No	No	Yes	Yes	252	1	4	1	4	96	2764	-70.92626791070	43.13419778990
2765	10/8/2015 Sandt DOT	Textured	Stamped Asphalt	Flat	Yes	No	No	Yes	No	150	1	2	1	34	55	2765	-70.92664191590	43.13438850840
2766	10/8/2015 Sandt DOT	Hatched	Asphalt	Flat	No	No	No	Yes	Yes	108	1	4	1	4	96	2766	-70.92672947280	43.13434085970
2767	10/8/2015 Sandt DOT	Hatched	Asphalt	Flat	No	No	No	Yes	Yes	78	1	3	1	4	96	2767	-70.92873667930	43.13533442370
2768	10/8/2015 Sandt DOT	Hatched	Asphalt	Flat	No	No	No	Yes	Yes	78	1	3	1	4	96	2768	-70.92880496580	43.13531940450
2769	10/8/2015 Sandt DOT	Hatched	Asphalt	Flat	No	No	No	Yes	Yes	78	1	3	1	4	96	2769	-70.92889544200	43.13513834340
2770	10/8/2015 Sandt DOT	Hatched	Asphalt	Flat	No	No	No	Yes	No	108	9	2	1	16	79	2770	-70.92667108860	43.13423610990
2771	10/8/2015 Sandt DOT	Hatched	Asphalt	Flat	No	No	No	Yes	No	108	11	3	1	16	79	2771	-70.92606213160	43.13403722380
2772	10/8/2015 Sandt DOT	Textured	Stamped Asphalt	Flat	Yes	No	No	Yes	No	96	4	0	1	44	41	2772	-70.91981342380	43.13227065670
2773	10/8/2015 Sandt DOT	Textured	Stamped Asphalt	Flat	Yes	No	No	Yes	Yes	96	3	2	1	42	44	2773	-70.91977066370	43.13213276030
2774	10/8/2015 Sandt DOT	Textured	Stamped Asphalt	Flat	Yes	No	No	Yes	Yes	96	3	2	1	42	44	2774	-70.92014469110	43.13249447940
2775	10/8/2015 Sandt DOT	Parallel	Asphalt	Flat	Yes	No	No	No	No	88	1	2	1	29	62	2775	-70.91782545700	43.13434383900
2776	10/8/2015 Sandt DOT	Parallel	Asphalt	Flat	No	No	No	Yes	Yes	88	1	4	1	6	93	2776	-70.91661040510	43.13471229490
2777	10/12/2015 Sandt DOT	Parallel	Asphalt	Flat	Yes	Yes	No	Yes	Yes	96	2	1	1	25	67	2777	-70.74680470900	43.04593846500
2778	10/12/2015 Sandt DOT	Parallel	Asphalt	Flat	Yes	Yes	No	Yes	Yes	96	2	1	1	25	67	2778	-70.74656196870	43.04613742290
2779	10/12/2015 Sandt DOT	Parallel	Asphalt	Flat	Yes	Yes	No	Yes	Yes	96	2	1	1	25	67	2779	-70.74629643050	43.04597570840
2780	10/12/2015 Sandt DOT	Parallel	Asphalt	Flat	Yes	Yes	No	Yes	Yes	96	2	1	1	25	67	2780	-70.74651435960	43.04575420860
2781	10/12/2015 Sandt DOT	Parallel	Asphalt	Flat	Yes	No	No	Yes	No	72	1	4	1	53	29	2781	-70.72433492150	43.06054149500
2782	10/12/2015 Sandt DOT	Parallel	Asphalt	Flat	Yes	No	No	No	No	78	2	4	1	29	62	2782	-70.72762657910	43.05944294230
2783	10/12/2015 Sandt DOT	Parallel Filled	Asphalt	Retroreflective	No	No	No	No	No	78	2	2	1	7	92	2783	-70.72785054330	43.05932989600
2784	10/14/2015 Sandt DOT	Parallel	Asphalt	Flat	No	No	No	No	Yes	72	1	0	1	32	58	2784	-70.79385220620	43.02536526700
2785	10/14/2015 Sandt DOT	Parallel	Asphalt	Flat	No	No	No	No	Yes	72	1	4	1	32	58	2785	-70.79364731000	43.02535187680
2786	10/14/2015 Sandt DOT	Parallel	Asphalt	Flat	Yes	No	No	Yes	Yes	76	0	5	1	26	66	2786	-70.77097032190	43.04895070640
2787	10/14/2015 Sandt DOT	Parallel	Asphalt	Flat	Yes	No	No	Yes	Yes	84	4	5	1	36	52	2787	-70.77106407380	43.04910313080
2788	10/14/2015 Sandt DOT	Parallel	Asphalt	Flat	Yes	No	No	Yes	Yes	84	2	5	1	26	66	2788	-70.77122570150	43.04906098300
2789	10/14/2015 Sandt DOT	Parallel	Asphalt	Flat	Yes	Yes	No	Yes	Yes	80	0	2	1	25	67	2789	-70.77030003230	43.05338429550
2790	10/14/2015 Sandt DOT	Parallel	Asphalt	Flat	Yes	Yes	No	Yes	Yes	80	0	3	1	25	67	2790	-70.77020162800	43.05377570310
2791	10/14/2015 Sandt DOT	Parallel	Asphalt	Flat	Yes	Yes	No	Yes	Yes	78	1	5	1	25	67	2791	-70.77006982100	43.05661009100
2792	10/14/2015 Sandt DOT	Parallel	Asphalt	Flat	Yes	Yes	No	Yes	Yes	84	4	1	1	35	53	2792	-70.76956958380	43.05708203690
2793	10/14/2015 Sandt DOT	Parallel	Asphalt	Flat	Yes	Yes	No	Yes	Yes	84	1	0	1	25	67	2793	-70.76990452950	43.05679419690
2794	10/15/2015 Sandt DOT	Parallel	Asphalt	Flat	Yes	No	No	Yes	Yes	76	1	1	1	26	66	2794	-70.92559125260	42.99432024980
2795	10/15/2015 Sandt DOT	Parallel	Asphalt	Flat	Yes	No	No	Yes	Yes	76	0	2	1	26	66	2795	-70.92586547000	42.99424323000
2796	10/15/2015 Sandt DOT	Parallel	Asphalt	Retroreflective	Yes	No	No	Yes	Yes	84	2	1	1	24	68	2796	-70.92609049500	42.99293062170
2797	10/15/2015 Sandt DOT	Parallel	Asphalt	Retroreflective	Yes	No	No	Yes	Yes	84	2	1	1	24	68	2797	-70.92640096670	42.99246144580
2798	10/15/2015 Sandt DOT	Parallel	Asphalt	Retroreflective	Yes	No	No	Yes	Yes	84	2	1	1	24	68	2798	-70.92670949040	42.99206659510
2799	10/15/2015 Sandt DOT	Parallel	Asphalt	Retroreflective	Yes	No	No	Yes	Yes	84	3	1	1	34	55	2799	-70.92734348750	42.99137896940
2800	10/15/2015 Sandt DOT	Parallel	Asphalt	Retroreflective	No	No	No	Yes	Yes	84	1	1	1	4	96	2800	-70.92917364970	42.99044786850
2801	10/15/2015 Sandt DOT	Parallel	Asphalt	Retroreflective	No	No	No	Yes	Yes	84	0	4	1	4	96	2801	-70.92941553280	42.99059170490
2802	10/15/2015 Sandt DOT	Parallel	Asphalt	Retroreflective	No	No	No	Yes	Yes	84	1	1	1	4	96	2802	-70.92934955890	42.99080989330
2803	10/15/2015 Sandt DOT	Parallel	Asphalt	Retroreflective	No	No	No	Yes	No	74	1	2	1	6	93	2803	-70.92823476730	42.99127780080
2804	10/15/2015 Sandt DOT	Parallel	Asphalt	Retroreflective	Yes	No	No	Yes	No	96	2	1	1	26	66	2804	-70.92738204570	42.99214291430
2805	10/15/2015 Sandt DOT	Parallel	Asphalt	Retroreflective	Yes	No	No	Yes	Yes	72	2	4	1	49	34	2805	-70.92704133020	42.99245607270
2806	10/15/2015 Sandt DOT	Parallel	Asphalt	Retroreflective	Yes	No	No	Yes	Yes	72	1	3	1	49	34	2806	-70.92673799770	42.99294707750
2807	10/15/2015 Sandt DOT	Parallel	Asphalt	Retroreflective	Yes	No	No	Yes	Yes	72	3	2	1	59	21	2807	-70.92635773740	42.99385262160
2808	10/16/2015 Sandt DOT	Hatched	Asphalt	Retroreflective	No	No	No	No	Yes	72	2	0	1	28	63	2808	-71.60419722450	43.28859348340
2809	10/16/2015 Sandt DOT	Hatched	Asphalt	Retroreflective	No	No	No	No	Yes	72	2	0	1	28	63	2809	-71.60463830280	43.29046923170
2810	10/16/2015 Sandt DOT	Hatched	Asphalt	Flat	Yes	No	No	No	No	90	1	1	1	27	64	2810	-71.53704521990	43.21380799000
2812	10/19/2015 Sandt DOT	Hatched	Asphalt	Flat	Yes	No	No	No	Yes	186	0	3	1	25	67	2812	-71.54084883790	43.18797530380
2813	10/19/2015 Sandt DOT	Hatched	Asphalt	Flat	Yes	No	No	No	No	96	0	0	1	27	64	2813	-71.54069064200	43.18816205780
2814	10/19/2015 Sandt DOT	Hatched	Asphalt	Flat	Yes	No	No	No	No	96	0	0	1	27	64	2814	-71.54063539600	43.18846757510
2815	10/19/2015 Sandt DOT	Hatched	Asphalt	Flat	Yes	No	No	No	No	186	2	6	1	37	51	2815	-71.54067209850	43.18886207570
2816	10/19/2015 Sandt DOT	Hatched	Asphalt	Flat	Yes	No	No	Yes	No	72	0	3	1	51	32	2816	-71.54014737880	43.19195212890
2817	10/19/2015 Sandt DOT	Hatched	Asphalt	Flat	Yes	No	No	Yes	No	72	1	1	1	51	32	2817	-71.54016215400	43.19094995300
2818	10/19/2015 Sandt DOT	Hatched	Asphalt	Flat	Yes	No	No	Yes	No	72	1	1	1	51	32	2818	-71.54041884960	43.18967424810
2819	10/20/2015 Sandt DOT	Hatched	Asphalt	Flat	No	No	No	Yes	Yes	108	2	0	1	4	96	2819	-70.93762612760	42.98496960870
2820	10/20/2015 Sandt DOT	Hatched	Asphalt	Flat	No	No	No	No	No	84	7	7	1	27	64	2820	-70.93935508460	42.98342198280
2821	10/20/2015 Sandt DOT	Hatched	Asphalt	Flat	No	No	No	No	No	102	7	1	1	17	78	2821	-70.93974272180	42.98284315370
2822	10/20/2015 Sandt DOT	Hatched	Asphalt	Flat	No	No	No	No	Yes	112	2	2	1	5	95	2822	-70.93929768880	42.98366460010
2823	10/20/2015 Sandt DOT	Hatched	Asphalt	Flat	No	No	No	No	Yes	84	6	2	1	15	81	2823	-70.93936724140	42.98373721590
2824	10/20/2015 Sandt DOT	Hatched	Asphalt	Flat	No	No	No	Yes	Yes	108	0	7	1	14	82	2824	-70.93762689770	42.98512912800
2825	10/20/2015 Sandt DOT	Parallel	Asphalt	Flat	No	No	No	Yes	No	94	7	1	1	18	77	2825	-70.93248392590	42.98967353540
2826	10/21/2015 Sandt DOT	Hatched	Asphalt	Raised	Yes	No	No	Yes	No	70	0	3	1	51	32	2826	-70.76838815110	43.08426108670
2827	10/21/2015 Sandt DOT	Hatched	Asphalt	Raised	Yes	No	No	Yes	Yes	84	0	1	1	24	68	2827	-70.76226872160	43.08216128480
2828	10/21/2015 Sandt DOT	Hatched	Asphalt	Raised	Yes	No	No	Yes	Yes	84	1	1	1	24	68	2828	-70.76225318480	43.08226030550
2829	10/21/2015 Sandt DOT	Hatched	Asphalt	Flat	Yes	Yes	No	Yes	Yes	90	0	1	1	23	70	2829	-70.77248669880	43.08447913020
2830	10/21/2015 Sandt DOT	Hatched	Asphalt	Flat	Yes	Yes	No	Yes	Yes	90	0	1	1	23	70	2830	-70.77251337650	43.08432510860
2831	10/21/2015 Sandt DOT	Hatched	Asphalt	Flat	Yes	Yes	No	Yes	Yes	90	1	2	1	23	70	2831	-70.77251337650	43.08432510860
2832	10/21/2015 Sandt DOT	Hatched	Asphalt	Flat	Yes	Yes	No	Yes	Yes	90	1	3	1	23	70	2832	-70.77432593460	43.08445815110
2833	10/21/2015 Sandt DOT	Hatched	Asphalt	Flat	Yes	No	No	Yes	Yes	90	1	3	1	24	68	2833	-70.77535800410	43.08442742770
2834	10/21/2015 Sandt DOT	Hatched	Asphalt	Flat	Yes	No	No	Yes	No	72	2	0	1	51	32	2834	-70.77931683240	43.08470937260
2835	10/21/2015 Sandt DOT	Hatched	Asphalt	Flat	Yes	No	No	Yes	Yes	90	3	1	1	34	55	2835	-70.77553562600	43.08430255180
2836	10/21/2015 Wilkinson dist 1	Hatched	Asphalt	Flat	Yes	No	No	No	No	96	0	3	1	27	64	2836	-71.39158692550	45.04989869380
2837	10/22/2015 Wilkinson dist 1	Parallel	Asphalt	Flat	No	No	No	No	No	96	0	3	1	9	89	2837	-71.39128421460	45.05155478500
2838	10/22/2015 Sandt DOT	Hatched	Asphalt	Retroreflective	No	No	No	Yes	Yes	70	1	0	1	27	64	2838	-70.78423964280	43.08147130250
2839	10/22/2015 Sandt DOT	Hatched	Asphalt	Retroreflective	No	No	No	Yes	Yes	70	1	0	1	27	64	2839	-70.78478563140	43.08216265330
2840	10/22/2015 Sandt DOT	Hatched	Asphalt	Retroreflective	Yes	No	No	Yes	No	70	5	2	1	59	21	2840	-70.78516460700	43.08269814680
2841	10/22/2015 Sandt DOT	Hatched	Asphalt	Retroreflective	Yes	No	No	Yes	No	70	2	3	1	49	34	2841	-70.78534184920	43.08293879950
2842	10/22/2015 Sandt DOT	Hatched	Asphalt	Retroreflective	No	No	No	Yes	Yes	70	1	0	1	27	64	2842	-70.78689615400	43.08465536010
2843	10/22/2015 Sandt DOT	Parallel Filled	Stamped Asphalt	Raised	No	No	No	Yes	Yes	144	2	2	1	10	88	2843	-70.78738241410	43.08519695850
2844	10/22/2015 Sandt DOT	Hatched	Asphalt	Raised	No	No	No	Yes	Yes	70	4	1	1	39	48	2844	-70.78738418410	43.08536466890
2845	10/22/2015 Sandt DOT	Hatched	Asphalt	Flat	Yes	Yes	No	Yes	Yes	72	2	6	1	58	22	2845	-70.78728275300	43.08647590750
2846	10/22/2015 Sandt DOT	Hatched	Asphalt	Flat	Yes	Yes	No	Yes	Yes	72	2	6	1	58	22	2846	-70.78754907400	43.08647089390

2847	10/22/2015 Sandt DOT	Hatched	Asphalt	Flat	Yes	Yes	No	Yes	Yes	72	5	2	1	58	22	2847	-70.78740942550	43.08662544930
2848	10/22/2015 Sandt DOT	Hatched	Asphalt	Flat	Yes	Yes	No	Yes	Yes	72	5	2	1	58	22	2848	-70.78742643280	43.08630937870
2849	10/21/2015 Sandt DOT	Hatched	Asphalt	Flat	Yes	No	No	Yes	Yes	72	2	0	1	49	34	2849	-70.78470850430	43.08645232500
2850	10/22/2015 Sandt DOT	Parallel	Asphalt	Flat	Yes	No	No	No	No	132	3	0	1	39	48	2850	-70.81362614410	43.08759115550
2851	10/22/2015 Sandt DOT	Hatched	Asphalt	Flat	Yes	No	No	No	No	72	1	1	1	52	30	2851	-70.81378567010	43.08769412550
2852	10/22/2015 Sandt DOT	Parallel	Asphalt	Flat	No	Yes	No	Yes	Yes	132	0	0	1	5	95	2852	-70.80865322710	43.08834913940
2853	10/22/2015 Sandt DOT	Parallel	Asphalt	Flat	No	Yes	No	Yes	Yes	132	0	2	1	5	95	2853	-70.80847778250	43.08820652950
2854	10/22/2015 Sandt DOT	Parallel	Asphalt	Flat	No	Yes	No	Yes	Yes	132	0	2	1	5	95	2854	-70.80877133130	43.08818297810
2855	10/22/2015 Sandt DOT	Parallel	Asphalt	Flat	No	Yes	No	Yes	Yes	80	4	1	1	15	81	2855	-70.80339297140	43.09030478270
2856	10/22/2015 Sandt DOT	Parallel	Asphalt	Flat	Yes	No	No	Yes	No	132	0	2	1	28	63	2856	-70.80756413090	43.08566262230
2857	10/22/2015 Sandt DOT	Parallel	Asphalt	Flat	Yes	No	No	Yes	No	132	0	2	1	28	63	2857	-70.80798896460	43.08557131910
2858	10/22/2015 Sandt DOT	Parallel	Asphalt	Flat	Yes	No	No	Yes	No	132	2	0	1	28	63	2858	-70.80781232420	43.08573680590
2859	10/22/2015 Sandt DOT	Parallel	Asphalt	Flat	Yes	No	No	Yes	No	132	2	0	1	28	63	2859	-70.80770280170	43.08546979120
2860	10/23/2015 Sandt DOT	Parallel Filled	Asphalt	Flat	Yes	No	No	Yes	No	84	9	2	1	38	49	2860	-70.93725690960	43.07759109120
2861	10/23/2015 Sandt DOT	Parallel Filled	Asphalt	Flat	Yes	No	No	Yes	No	60	4	2	1	63	15	2861	-70.93764404140	43.07680045260
2862	10/23/2015 Sandt DOT	Parallel Filled	Asphalt	Flat	Yes	No	No	Yes	No	96	9	6	1	48	36	2862	-70.93839400340	43.07456114560
2863	10/23/2015 Sandt DOT	Parallel Filled	Asphalt	Flat	Yes	No	No	Yes	No	96	1	2	1	28	63	2863	-70.93962925720	43.07103911680
2864	10/23/2015 Sandt DOT	Parallel Filled	Asphalt	Flat	Yes	No	No	No	Yes	96	2	2	1	27	64	2864	-70.93949024460	43.07117862610
2865	10/23/2015 Sandt DOT	Parallel Filled	Asphalt	Flat	Yes	No	No	Yes	No	96	5	3	1	38	49	2865	-70.93928524170	43.07224080330
2866	10/23/2015 Sandt DOT	Parallel Filled	Asphalt	Flat	Yes	No	No	Yes	No	96	1	3	1	28	63	2866	-70.93917887580	43.07229957440
2867	10/23/2015 Sandt DOT	Hatched	Asphalt	Flat	Yes	No	No	Yes	Yes	96	6	4	1	34	55	2867	-70.93618063390	43.07881948350
2868	10/23/2015 Sandt DOT	Hatched	Asphalt	Flat	Yes	No	No	Yes	Yes	96	6	4	1	34	55	2868	-70.93658582650	43.07818267780
2869	10/23/2015 Sandt DOT	Hatched	Asphalt	Flat	Yes	No	No	Yes	Yes	96	2	1	1	24	68	2869	-70.93623237670	43.07894586880
2870	10/23/2015 Sandt DOT	Hatched	Asphalt	Flat	Yes	No	No	Yes	Yes	96	1	2	1	24	68	2870	-70.93584925830	43.07968455310
2871	10/23/2015 Sandt DOT	Hatched	Asphalt	Flat	Yes	No	No	Yes	Yes	96	7	2	1	34	55	2871	-70.93540636650	43.08021179590
2872	10/23/2015 Sandt DOT	Hatched	Asphalt	Flat	Yes	No	No	Yes	Yes	96	1	4	1	24	68	2872	-70.93527734390	43.08091286750
2873	10/23/2015 Sandt DOT	Hatched	Asphalt	Flat	Yes	No	No	Yes	Yes	96	5	8	1	44	41	2873	-70.93507725030	43.08153267360
2874	10/23/2015 Sandt DOT	Hatched	Asphalt	Flat	Yes	No	No	Yes	Yes	76	12	1	1	34	55	2874	-70.93534464040	43.08109679060
2875	10/23/2015 Sandt DOT	Hatched	Asphalt	Flat	Yes	No	No	Yes	Yes	76	2	3	1	24	68	2875	-70.93537242610	43.08079263440
2876	10/23/2015 Sandt DOT	Hatched	Asphalt	Flat	Yes	No	No	Yes	Yes	76	6	12	1	44	41	2876	-70.93541018680	43.08061047470
2877	10/23/2015 Sandt DOT	Hatched	Asphalt	Flat	Yes	No	No	Yes	Yes	76	3	8	1	44	41	2877	-70.93551860690	43.08024632270
2878	10/23/2015 Sandt DOT	Hatched	Asphalt	Flat	Yes	No	No	Yes	Yes	96	3	3	1	34	55	2878	-70.93595102860	43.07968833960
2879	10/23/2015 Sandt DOT	Hatched	Asphalt	Flat	Yes	No	No	Yes	Yes	96	5	1	1	34	55	2879	-70.93637209340	43.07896900490
2880	10/23/2015 Sandt DOT	Hatched	Asphalt	Flat	Yes	No	No	Yes	Yes	96	6	2	1	34	55	2880	-70.93663161690	43.07843009000
2881	10/23/2015 Sandt DOT	Hatched	Asphalt	Flat	Yes	No	No	Yes	Yes	96	0	2	1	24	68	2881	-70.93653596260	43.07843556520
2882	10/23/2015 Sandt DOT	Hatched	Asphalt	Flat	No	No	No	No	Yes	96	5	7	1	25	67	2882	-70.93926199430	43.07704328400
2883	10/23/2015 Sandt DOT	Hatched	Asphalt	Flat	No	No	No	Yes	Yes	96	2	1	1	4	96	2883	-70.93815542580	43.07745356910
2884	10/23/2015 Sandt DOT	Hatched	Asphalt	Flat	No	No	No	Yes	Yes	96	4	3	1	14	82	2884	-70.93828753750	43.07750517060
2885	10/23/2015 Sandt DOT	Hatched	Asphalt	Flat	No	No	No	Yes	Yes	96	3	5	1	14	82	2885	-70.93978670070	43.07697370590
2886	10/23/2015 Sandt DOT	Hatched	Asphalt	Flat	No	No	No	Yes	Yes	96	5	7	1	24	68	2886	-70.93987377800	43.07688970500
2887	10/23/2015 Sandt DOT	Hatched	Asphalt	Flat	Yes	No	No	Yes	Yes	96	2	5	1	24	68	2887	-70.94157619440	43.07661531460
2888	10/23/2015 Sandt DOT	Hatched	Asphalt	Flat	Yes	No	No	Yes	Yes	96	2	5	1	24	68	2888	-70.94162217980	43.07650342780
2889	10/23/2015 Sandt DOT	Hatched	Asphalt	Flat	Yes	No	No	Yes	Yes	96	3	10	1	44	41	2889	-70.94171692190	43.07651998520
2890	10/23/2015 Sandt DOT	Hatched	Asphalt	Flat	Yes	No	No	Yes	Yes	96	2	2	1	24	68	2890	-70.94546604210	43.07497663030
2891	10/23/2015 Sandt DOT	Hatched	Asphalt	Flat	Yes	No	No	Yes	Yes	96	2	2	1	24	68	2891	-70.94688761930	43.07437380980
2892	10/23/2015 Sandt DOT	Hatched	Asphalt	Flat	Yes	No	No	No	No	76	3	1	1	37	51	2892	-70.94917283400	43.07342736290
2893	10/23/2015 Sandt DOT	Hatched	Asphalt	Flat	No	No	No	No	No	96	5	2	1	17	78	2893	-70.94065243680	43.07663926190
2894	10/26/2015 Wilkinson District 1	Hatched	Asphalt	Flat	No	No	No	Yes	No	54	0	1	1	31	59	2894	-71.53134503860	44.99548446760
2895	10/26/2015 Wilkinson district 1	Hatched	Asphalt	Flat	No	No	No	No	No	54	0	2	1	32	58	2895	-71.53153765330	44.99447049010
2896	10/26/2015 Sandt DOT	Hatched	Asphalt	Flat	Yes	No	No	Yes	Yes	108	1	4	1	24	68	2896	-70.79291380950	42.94226965660
2897	10/26/2015 Sandt DOT	Hatched	Asphalt	Flat	Yes	No	No	Yes	Yes	132	8	1	1	34	55	2897	-70.79302239720	42.94231158670
2911	10/27/2015 Sandt DOT	Parallel	Asphalt	Retroreflective	No	No	No	Yes	Yes	78	1	1	1	4	96	2911	-70.79385968780	42.94118575990
2912	10/27/2015 Sandt DOT	Parallel	Asphalt	Retroreflective	Yes	No	No	Yes	Yes	78	2	3	1	24	68	2912	-70.79405399150	42.94113169700
2913	10/27/2015 Sandt DOT	Parallel	Asphalt	Retroreflective	Yes	No	No	Yes	Yes	78	2	3	1	24	68	2913	-70.79394665650	42.94128525660
2914	10/27/2015 Sandt DOT	Parallel Filled	Asphalt	Flat	Yes	No	No	Yes	No	128	0	3	1	28	63	2914	-70.79412377700	42.94134632710
2915	10/27/2015 Sandt DOT	Parallel Filled	Asphalt	Flat	Yes	No	No	Yes	Yes	96	2	2	1	26	66	2915	-70.79413845320	42.94124280210
2916	10/27/2015 Sandt DOT	Parallel	Asphalt	Flat	Yes	No	No	Yes	No	74	11	4	1	38	49	2916	-70.79463071390	42.94143657740
2917	10/27/2015 Sandt DOT	Parallel	Asphalt	Flat	Yes	No	No	Yes	No	92	0	4	1	28	63	2917	-70.79465226530	42.94134746750
2918	10/27/2015 Sandt DOT	Hatched	Asphalt	Retroreflective	No	No	No	Yes	Yes	112	0	4	1	2	99	2918	-70.79494570850	42.93939776500
2919	10/27/2015 Sandt DOT	Hatched	Asphalt	Retroreflective	No	Yes	No	No	Yes	78	0	3	1	2	99	2919	-70.79875657750	42.92703150780
2920	10/27/2015 Sandt DOT	Hatched	Asphalt	Retroreflective	No	Yes	No	Yes	Yes	112	0	4	1	1	100	2920	-70.79822850940	42.92921721210
2921	10/27/2015 Sandt DOT	Hatched	Asphalt	Retroreflective	No	No	No	Yes	Yes	112	0	4	1	2	99	2921	-70.79770467310	42.93176788220
2922	10/27/2015 Sandt DOT	Hatched	Asphalt	Retroreflective	Yes	No	No	Yes	Yes	112	0	4	1	22	71	2922	-70.79732886920	42.93303955650
2923	10/27/2015 Sandt DOT	Hatched	Asphalt	Retroreflective	Yes	No	No	Yes	Yes	112	0	4	1	22	71	2923	-70.79688100190	42.93432675710
2924	10/27/2015 Sandt DOT	Hatched	Asphalt	Retroreflective	No	No	No	Yes	Yes	112	0	4	1	2	99	2924	-70.79642800040	42.93557912510
2925	10/27/2015 Sandt DOT	Hatched	Asphalt	Retroreflective	No	No	No	Yes	Yes	112	1	3	1	2	99	2925	-70.79593068110	42.93685044070
2926	10/27/2015 Sandt DOT	Hatched	Asphalt	Retroreflective	No	No	No	Yes	Yes	112	0	4	1	2	99	2926	-70.79543685360	42.93809472540
2927	10/27/2015 Sandt DOT	Parallel Filled	Asphalt	Retroreflective	Yes	No	No	No	Yes	108	0	2	1	25	67	2927	-70.80406556540	42.91775795460
2928	10/27/2015 Sandt DOT	Parallel Filled	Asphalt	Retroreflective	Yes	No	No	No	Yes	108	0	2	1	25	67	2928	-70.80393150850	42.91755061890
2929	10/27/2015 Sandt DOT	Parallel Filled	Asphalt	Retroreflective	Yes	No	No	No	Yes	108	0	2	1	25	67	2929	-70.80560445040	42.91736539490
2930	10/27/2015 Sandt DOT	Parallel Filled	Asphalt	Retroreflective	Yes	No	No	No	Yes	108	0	2	1	25	67	2930	-70.80544997320	42.91715202340
2946	10/29/2015 Sandt DOT	Parallel Filled	Asphalt	Retroreflective	Yes	No	No	Yes	Yes	96	0	1	1	24	68	2946	-70.81130183250	42.90752960680
2948	10/29/2015 Sandt DOT	Parallel Filled	Asphalt	Retroreflective	Yes	No	No	Yes	Yes	96	0	1	1	24	68	2948	-70.81151769030	42.90624116220
3019	10/27/2015 Nichols district 1	Hatched	Asphalt	Flat	Yes	No	No	Yes	No	68	2	0	1	51	32	3019	-71.49496243600	44.89663007400
3020	10/27/2015 Nichols district 1	Hatched	Asphalt	Flat	No	No	No	Yes	Yes	84	0	6	1	14	82	3020	-71.49566465880	44.89579279520
3021	10/27/2015 Nichols district 1	Hatched	Asphalt	Flat	No	No	No	Yes	No	84	3	5	1	16	79	3021	-71.49580998910	44.89559716520
3022	10/27/2015 Nichols district 1	Hatched	Asphalt	Flat	No	No	No	Yes	No	88	0	0	1	6	93	3022	-71.49618223460	44.89506113110
3023	10/27/2015 Wilkinson District 1	Hatched	Asphalt	Flat	No	No	No	Yes	No	80	1	2	1	6	93	3023	-71.49655953060	44.89453528720
3024	10/27/2015 Wilkinson District 1	Hatched	Asphalt	Flat	No	No	No	Yes	No	87	0	1	1	6	93	3024	-71.49745511780	44.89285340810
3025	10/27/2015 Nichols district 1	Hatched	Asphalt	Flat	No	No	No	Yes	No	84	2	1	1	6	93	3025	-71.49659447830	44.89430260430
3026	10/27/2015 Nichols district 1	Hatched	Asphalt	Flat	No	No	No	Yes	No	84	1	3	1	6	93	3026	-71.49655583320	44.89419906640
3027	10/27/2015 Nichols district 1	Hatched	Asphalt	Flat	Yes	No	No	Yes	No	84	0	3	1	26	66	3027	-71.49716738100	44.89306275820
3028	10/27/2015 Nichols district 1	Hatched	Asphalt	Flat	Yes	No	No	Yes	No	84	0	1	1	26	66	3028	-71.49726406620	44.89304275880
3029	10/27/2015 Nichols district 1	Hatched	Asphalt	Flat	No	No	No	No	Yes	88	1	2	1	5	95	3029	-71.49775537070	44.89204213360
3030	10/27/2015 Nichols district 1	Hatched	Asphalt	Flat	No	No	No	No	No	84	7	1	1	17	78	3030	-71.49774645310	44.89187120120
3031	11/2/2015 Nichols district 1	Hatched	Asphalt	Flat	No	No	No	Yes	No	84	1	0	1	6	93	3031	-71.49821114390	44.89524694050
3032	11/2/2015 Nichols district 1	Hatched	Asphalt	Flat	No	No	No	Yes	No	82	0	3	1	6	93	3032	-71.50268602280	44.89737426960
3033	11/2/2015 Nichols district 1	Hatched	Asphalt	Flat	Yes	No	No	No	No	84	3	1	1	37	51	3033	-71.49571967210	44.89563494150
3034	11/2/2015 Nichols district 1	Hatched	Asphalt	Flat	No	No	No	No	No	78	0	5	1	7	92	3034	-71.49350000190	44.89604004550

3035	11/2/2015 Nichols district 1	Hatched	Asphalt	Flat	No	No	No	Yes	No	82	0	2	1	6	93	3035	-71.49551194710	44.89274972420
3036	11/2/2015 Nichols district 1	Hatched	Asphalt	Flat	Yes	No	No	No	No	74	4	0	1	37	51	3036	-71.49444759910	44.89261872730
3037	10/27/2015 Sandt DOT	Parallel Filled	Asphalt	Retroreflective	Yes	No	No	No	Yes	108	0	2	1	25	67	3037	-70.80667386740	42.91666329910
3038	10/27/2015 Sandt DOT	Parallel Filled	Asphalt	Retroreflective	Yes	No	No	No	Yes	108	0	2	1	25	67	3038	-70.80643654810	42.91654927200
3039	10/27/2015 Sandt DOT	Parallel Filled	Asphalt	Retroreflective	Yes	No	No	No	Yes	108	0	2	1	25	67	3039	-70.80717946920	42.91590281440
3040	10/27/2015 Sandt DOT	Parallel Filled	Asphalt	Retroreflective	Yes	No	No	No	Yes	108	0	2	1	25	67	3040	-70.80689625330	42.91581845260
3041	10/29/2015 Sandt DOT	Parallel Filled	Asphalt	Flat	Yes	No	No	Yes	Yes	102	1	4	1	26	66	3041	-70.80953235280	42.91274426210
3042	10/29/2015 Sandt DOT	Parallel Filled	Asphalt	Flat	Yes	No	No	Yes	Yes	108	1	2	1	26	66	3042	-70.80974207900	42.91288866820
3043	10/29/2015 Sandt DOT	Parallel Filled	Asphalt	Flat	Yes	No	No	Yes	No	84	1	2	1	28	63	3043	-70.80971868160	42.91296038860
3044	10/29/2015 Sandt DOT	Parallel Filled	Asphalt	Flat	Yes	No	No	Yes	No	106	4	0	1	38	49	3044	-70.80918987630	42.91343643730
3045	10/29/2015 Sandt DOT	Parallel Filled	Asphalt	Flat	Yes	No	No	Yes	Yes	98	2	4	1	26	66	3045	-70.80895637230	42.91336505680
3046	10/29/2015 Sandt DOT	Parallel Filled	Asphalt	Flat	Yes	No	No	Yes	Yes	98	2	4	1	26	66	3046	-70.80828548730	42.91420913320
3047	10/29/2015 Sandt DOT	Parallel Filled	Asphalt	Flat	Yes	No	No	Yes	Yes	98	2	4	1	26	66	3047	-70.80852236170	42.91403562690
3048	10/29/2015 Sandt DOT	Parallel Filled	Asphalt	Flat	Yes	No	No	Yes	Yes	98	2	4	1	26	66	3048	-70.80758046190	42.91506599020
3049	10/29/2015 Sandt DOT	Parallel	Asphalt	Retroreflective	Yes	No	No	Yes	No	84	1	4	1	26	66	3049	-70.81084916220	42.90880609630
3050	10/29/2015 Sandt DOT	Parallel Filled	Asphalt	Retroreflective	Yes	No	No	Yes	Yes	96	0	1	1	24	68	3050	-70.81093926880	42.90885619740
3051	10/29/2015 Sandt DOT	Parallel	Asphalt	Retroreflective	Yes	No	No	Yes	No	84	1	4	1	26	66	3051	-70.81124561520	42.90748622940
3053	10/29/2015 Sandt DOT	Parallel Filled	Asphalt	Retroreflective	Yes	No	No	Yes	Yes	96	0	1	1	24	68	3053	-70.81143645060	42.90682497740
3055	10/29/2015 Sandt DOT	Parallel Filled	Asphalt	Retroreflective	Yes	No	No	Yes	Yes	96	0	1	1	24	68	3055	-70.81118514990	42.90810439630
3056	10/29/2015 Sandt DOT	Parallel Filled	Asphalt	Retroreflective	Yes	No	No	Yes	Yes	96	0	1	1	24	68	3056	-70.81079881890	42.90949180340
3057	10/29/2015 Sandt DOT	Parallel Filled	Asphalt	Retroreflective	Yes	No	No	Yes	Yes	96	0	1	1	24	68	3057	-70.81063935800	42.91004935550
3058	10/29/2015 Sandt DOT	Parallel Filled	Asphalt	Retroreflective	Yes	No	No	Yes	Yes	96	0	1	1	24	68	3058	-70.81032616380	42.91080550410
3059	10/29/2015 Sandt DOT	Parallel Filled	Asphalt	Retroreflective	Yes	No	No	Yes	Yes	96	0	1	1	24	68	3059	-70.81016234540	42.91128198400
3060	10/29/2015 Sandt DOT	Parallel Filled	Asphalt	Retroreflective	Yes	No	No	Yes	Yes	96	0	1	1	24	68	3060	-70.80983817380	42.91203937000
3061	11/2/2015 Sandt DOT	Parallel	Asphalt	Flat	Yes	No	No	No	No	84	1	0	1	29	62	3061	-70.81176814840	42.90384740110
3062	11/2/2015 Sandt DOT	Parallel Filled	Asphalt	Flat	Yes	No	No	Yes	Yes	80	0	1	1	26	66	3062	-70.81193674170	42.90367254350
3063	10/29/2015 Sandt DOT	Parallel Filled	Asphalt	Retroreflective	Yes	No	No	Yes	Yes	96	0	1	1	24	68	3063	-70.81183073370	42.90426202950
3064	10/29/2015 Sandt DOT	Parallel Filled	Asphalt	Retroreflective	Yes	No	No	No	Yes	96	0	1	1	25	67	3064	-70.81175357040	42.90498423970
3065	10/29/2015 Sandt DOT	Parallel Filled	Asphalt	Retroreflective	Yes	No	No	No	Yes	96	0	1	1	25	67	3065	-70.81166096560	42.90553629320
3066	11/2/2015 Sandt DOT	Parallel Filled	Asphalt	Flat	Yes	No	No	No	Yes	80	0	2	1	27	64	3066	-70.81342427390	42.90195384120
3067	11/2/2015 Sandt DOT	Parallel Filled	Asphalt	Flat	Yes	No	No	No	Yes	80	0	2	1	27	64	3067	-70.81368792010	42.90173057100
3068	11/2/2015 Sandt DOT	Parallel Filled	Asphalt	Flat	Yes	No	No	No	Yes	80	0	2	1	27	64	3068	-70.81482311550	42.90080168910
3069	11/2/2015 Sandt DOT	Parallel Filled	Asphalt	Flat	Yes	No	No	No	Yes	80	0	2	1	27	64	3069	-70.81274791130	42.90271880350
3070	11/2/2015 Sandt DOT	Parallel	Asphalt	Flat	No	No	No	Yes	Yes	84	1	2	1	6	93	3070	-70.81837270590	42.87253672500
3075	11/13/2015 Sandt DOT	Parallel	Asphalt	Flat	Yes	No	No	Yes	No	100	2	2	1	28	63	3075	-71.60846248980	43.37222952380
3076	11/13/2015 Sandt DOT	Hatched	Asphalt	Raised	No	No	No	No	No	72	2	3	1	32	58	3076	-71.59046963810	43.43268675580
3077	11/13/2015 Sandt DOT	Hatched	Asphalt	Raised	No	No	No	No	No	72	0	1	1	32	58	3077	-71.59156525800	43.43372295420
3078	11/13/2015 Sandt DOT	Hatched	Asphalt	Raised	No	No	No	No	No	72	2	3	1	32	58	3078	-71.59200111390	43.43424558860
3079	11/13/2015 Sandt DOT	Hatched	Asphalt	Flat	Yes	No	No	No	No	72	3	9	1	72	3	3079	-71.59213808380	43.43515033110
3080		Hatched	Asphalt	Flat	Yes	No	No	Yes	No	62	0	0	1	51	32	3080	-72.48448327510	42.78641862090
3081	11/10/2015 NM SWRPC	Hatched	Asphalt	Flat	No	No	No	Yes	No	0	0	0	1	31	59	3081	-72.48357681040	42.78644249080
3082	11/10/2015 NM SWRCP	Hatched	Asphalt	Flat	No	Yes	No	No	No	78	0	0	1	6	93	3082	-72.48162418920	42.78665239450
3083	11/10/2015 NM SWRPC	Hatched	Asphalt	Flat	No	No	No	No	No	70	0	0	1	32	58	3083	-72.48102118670	42.78679926660
3084	11/10/2015 NM SWRPC	Hatched	Asphalt	Flat	No	No	No	No	No	72	0	0	1	32	58	3084	-72.48092541530	42.78674919950
3085	11/10/2015 NM SWRPC	Hatched	Asphalt	Flat	No	No	No	No	No	72	0	0	1	32	58	3085	-72.48082923220	42.78695839610
3086	11/10/2015 NM SWRPC	Hatched	Asphalt	Flat	No	No	No	No	No	72	0	0	1	32	58	3086	-72.48049323910	42.78708012930
3087	11/16/2015 Sandt DOT	Hatched	Asphalt	Retroreflective	Yes	No	No	No	Yes	94	3	9	1	43	42	3087	-71.39636913800	43.75543913340
3088	11/16/2015 Wilkinson District 1	Hatched	Asphalt	Retroreflective	Yes	No	No	No	Yes	80	2	2	1	23	70	3088	-71.62764880370	44.74984726820
3089	11/18/2015 Sandt DOT	Parallel Filled	Asphalt	Flat	No	No	No	No	No	90	2	5	1	9	89	3089	-71.15413123800	43.75531343260
3090	11/18/2015 Sandt DOT	Parallel Filled	Asphalt	Flat	No	No	No	No	No	90	2	5	1	9	89	3090	-71.15555768820	43.75551651900
3091	11/19/2015 Nichols district 1	Hatched	Asphalt	Flat	Yes	No	No	Yes	No	60	1	5	1	51	32	3091	-71.17173571130	44.38778865250
3092	11/19/2015 Nichols district 1	Hatched	Asphalt	Flat	Yes	No	No	No	No	60	4	0	1	62	16	3092	-71.17265873210	44.38805059810
3093	11/19/2015 Nichols district 1	Parallel	Asphalt	Raised	No	No	No	No	No	74	0	2	1	9	89	3093	-71.17402518220	44.38832118400
3094	11/19/2015 Nichols district 1	Hatched	Asphalt	Raised	Yes	No	No	No	No	60	1	0	1	52	30	3094	-71.17450617700	44.38854172200
3095	11/19/2015 Nichols district 1	Parallel	Asphalt	Raised	No	No	No	Yes	No	75	0	2	1	8	90	3095	-71.17545101590	44.38868730860
3096	11/19/2015 Nichols district 1	Hatched	Asphalt	Raised	No	No	No	No	No	62	5	6	1	52	30	3096	-71.17597100080	44.38889473520
3097	11/19/2015 Nichols district 1	Parallel	Asphalt	Raised	Yes	No	No	Yes	Yes	74	0	2	1	26	66	3097	-71.17649626930	44.38896224110
3098	11/19/2015 Nichols district 1	Parallel	Asphalt	Raised	Yes	No	No	Yes	Yes	74	1	1	1	26	66	3098	-71.17724779940	44.38913087700
3099	11/19/2015 Nichols district 1	Hatched	Asphalt	Raised	No	No	No	No	No	60	5	1	1	42	44	3099	-71.17726618880	44.38921458490
3100	11/19/2015 Wilkinson District 1	Parallel	Asphalt	Flat	Yes	No	No	Yes	No	66	3	1	1	63	15	3100	-71.17563220050	44.38860752970
3101	11/6/2015 Sandt DOT	Parallel	Asphalt	Flat	Yes	No	No	No	Yes	84	1	6	1	37	51	3101	-70.86894972710	42.88451201310
3102	11/6/2015 Sandt DOT	Parallel	Asphalt	Flat	Yes	No	No	No	Yes	84	1	6	1	37	51	3102	-70.86888323620	42.88438019530
3103	11/6/2015 Sandt DOT	Parallel	Asphalt	Flat	Yes	No	No	No	Yes	84	0	0	1	27	64	3103	-70.86901700210	42.88443249850
3104	11/6/2015 Sandt DOT	Parallel	Asphalt	Flat	Yes	No	No	No	Yes	84	0	0	1	27	64	3104	-70.86883390860	42.88446644450
3105	11/6/2015 Sandt DOT	Parallel	Asphalt	Flat	Yes	No	No	No	Yes	84	2	1	1	27	64	3105	-70.87004664690	42.88578376400
3106	11/6/2015 Sandt DOT	Parallel	Asphalt	Flat	Yes	No	No	No	No	84	2	1	1	29	62	3106	-70.87149620370	42.88790440160
3107	11/6/2015 Sandt DOT	Parallel	Asphalt	Flat	Yes	No	No	No	No	80	4	1	1	39	48	3107	-70.87535831510	42.89416131080
3108	11/6/2015 Sandt DOT	Parallel Filled	Asphalt	Flat	Yes	No	No	No	No	84	1	4	1	29	62	3108	-70.87831143880	42.89454754090
3109	11/6/2015 Sandt DOT	Parallel Filled	Asphalt	Flat	Yes	Yes	No	No	Yes	84	2	1	1	26	66	3109	-70.87848479260	42.89436468410
3110	11/6/2015 Sandt DOT	Parallel Filled	Asphalt	Flat	Yes	Yes	No	No	Yes	84	3	2	1	36	52	3110	-70.87894880060	42.89427184420
3111	11/6/2015 Sandt DOT	Parallel Filled	Asphalt	Flat	Yes	Yes	No	Yes	Yes	84	1	2	1	25	67	3111	-70.88246405020	42.89501487810
3112	11/20/2015 Sandt DOT	Parallel Filled	Asphalt	Flat	Yes	No	No	No	No	70	4	1	1	64	14	3112	-71.03041532980	43.55391347600
3113	11/20/2015 Sandt DOT	Parallel Filled	Asphalt	Flat	No	No	No	Yes	Yes	84	1	3	1	6	93	3113	-71.03438872810	43.55188641670
3114	11/20/2015 Sandt DOT	Parallel Filled	Asphalt	Retroreflective	No	No	No	No	Yes	94	5	4	1	15	81	3114	-71.21063047610	43.58451199330
3115	11/20/2015 Sandt DOT	Parallel Filled	Asphalt	Retroreflective	No	No	No	Yes	No	94	5	1	1	16	79	3115	-71.21190917990	43.58465457760
3116	11/20/2015 Sandt DOT	Parallel Filled	Asphalt	Retroreflective	No	No	No	Yes	Yes	94	4	3	1	14	82	3116	-71.21201390760	43.58456555440
3117	11/20/2015 Sandt DOT	Parallel Filled	Asphalt	Retroreflective	No	No	No	Yes	No	94	1	1	1	6	93	3117	-71.21246063350	43.58464676040
3118	11/20/2015 Sandt DOT	Parallel Filled	Asphalt	Retroreflective	No	No	No	Yes	No	94	1	1	1	6	93	3118	-71.21246651250	43.58443201390
3119	11/20/2015 Sandt DOT	Parallel Filled	Asphalt	Retroreflective	No	No	No	Yes	Yes	94	4	3	1	14	82	3119	-71.21255918580	43.58454769380
3120	11/20/2015 Sandt DOT	Parallel Filled	Asphalt	Retroreflective	No	No	No	Yes	No	94	1	1	1	6	93	3120	-71.21283388530	43.58463710810
3121	11/20/2015 Sandt DOT	Parallel Filled	Asphalt	Retroreflective	No	No	No	Yes	Yes	94	3	3	1	14	82	3121	-71.21329700560	43.58444270770
3122	11/20/2015 Sandt DOT	Parallel Filled	Asphalt	Retroreflective	No	No	No	Yes	Yes	94	3	3	1	14	82	3122	-71.21395375700	43.58441570730
3123	11/20/2015 Sandt DOT	Parallel Filled	Asphalt	Retroreflective	No	No	No	Yes	Yes	94	4	2	1	14	82	3123	-71.21478076810	43.58446573900
3124	11/20/2015 Sandt DOT	Parallel Filled	Asphalt	Retroreflective	No	No	No	Yes	No	94	4	6	1	26	66	3124	-71.21539752630	43.58486236620
3125	11/20/2015 Sandt DOT	Parallel Filled	Asphalt	Retroreflective	No	No	No	Yes	Yes	94	6	6	1	24	68	3125	-71.21540962060	43.58472685700
3126	11/20/2015 Sandt DOT	Parallel Filled	Asphalt	Retroreflective	No	No	No	Yes	No	94	4	6	1	26	66	3126	-71.21555251710	43.58467471060
3127	11/20/2015 Sandt DOT	Parallel Filled	Asphalt	Retroreflective	No	No	No	No	No	94	2	4	1	7	92	3127	-71.21454402810	43.58435103590
3128	11/20/2015 Sandt DOT	Parallel Filled	Asphalt	Retroreflective	No	No	No	Yes	No	94	1	1	1	6	93	3128	-71.21289229780	43.58439792450
3129	11/20/2015 Sandt DOT	Parallel Filled	Asphalt	Retroreflective	No	No	No	Yes	No	94	6	12	1	26	66	3129	-71.21054923500	43.58462634690

3130	11/23/2015 Sandt DOT	Parallel Filled	Asphalt	Retroreflective	No	No	No	No	Yes	96	3	2	1	15	81	3130	-71.20996316470	43.58447836930
3131	11/23/2015 Sandt DOT	Parallel Filled	Asphalt	Retroreflective	No	No	No	No	Yes	96	3	2	1	15	81	3131	-71.20981840170	43.58446697550
3132	11/23/2015 Sandt DOT	Parallel Filled	Asphalt	Retroreflective	No	No	No	No	Yes	96	3	2	1	15	81	3132	-71.20921213250	43.58444567240
3133	11/23/2015 Sandt DOT	Parallel Filled	Asphalt	Retroreflective	No	No	No	No	Yes	96	3	3	1	15	81	3133	-71.20788257160	43.58434428530
3134	11/23/2015 Sandt DOT	Parallel Filled	Asphalt	Retroreflective	No	No	No	No	Yes	96	1	3	1	5	95	3134	-71.20769670030	43.58439233560
3135	11/23/2015 Sandt DOT	Parallel Filled	Asphalt	Flat	Yes	No	No	Yes	No	80	5	4	1	38	49	3135	-71.20658177000	43.58593481830
3136	11/23/2015 Sandt DOT	Parallel Filled	Asphalt	Flat	Yes	No	No	Yes	No	80	5	4	1	38	49	3136	-71.20638753990	43.58592497670
3137	11/23/2015 Sandt DOT	Parallel Filled	Asphalt	Flat	Yes	No	No	Yes	Yes	80	2	5	1	26	66	3137	-71.20645215190	43.58676539220
3138	11/23/2015 Sandt DOT	Parallel Filled	Asphalt	Flat	Yes	No	No	No	Yes	86	1	2	1	27	64	3138	-71.20564771930	43.58917637220
3139	11/23/2015 Sandt DOT	Parallel Filled	Asphalt	Flat	Yes	No	No	No	Yes	96	2	1	1	27	64	3139	-71.20554290120	43.58926222440
3140	11/23/2015 Nichols district 1	Parallel	Asphalt	Raised	No	No	No	No	No	65	10	4	1	44	41	3140	-71.11779615002 0	44.38927278790
3141	11/23/2015 Nichols district 1	Hatched	Asphalt	Raised	Yes	No	No	Yes	Yes	75	1	3	1	24	68	3141	-71.11795360170	44.38932781990
3142	11/23/2015 Nichols district 1	Parallel	Asphalt	Raised	No	No	No	Yes	No	65	1	1	1	33	56	3142	-71.18009456190	44.38979315010
3143	11/23/2015 Nichols district 1	Hatched	Asphalt	Raised	Yes	No	No	Yes	No	75	2	3	1	26	66	3143	-71.18003079400	44.38982058370
3144	11/19/2015 Nichols district 1	Hatched	Asphalt	Raised	Yes	No	No	No	Yes	75	2	2	1	25	67	3144	-71.18554298320	44.39200483680
3145	11/19/2015 Nichols district 1	Hatched	Asphalt	Raised	Yes	No	No	Yes	Yes	75	1	1	1	24	68	3145	-71.18282967620	44.39086174150
3146	11/19/2015 Nichols district 1	Hatched	Asphalt	Raised	Yes	No	No	No	Yes	72	0	2	1	50	33	3146	-71.18136407910	44.39025815900
3147	11/23/2015 Sandt DOT	Parallel Filled	Asphalt	Flat	Yes	No	No	Yes	No	78	2	2	1	28	63	3147	-71.20527714180	43.59084247340
3148	11/23/2015 Sandt DOT	Parallel Filled	Asphalt	Flat	Yes	No	No	Yes	Yes	96	1	6	1	36	52	3148	-71.20535297150	43.59038865490
3149	11/23/2015 Sandt DOT	Parallel Filled	Asphalt	Flat	Yes	No	No	Yes	Yes	96	1	3	1	26	66	3149	-71.20540228940	43.58999301980
3150	11/23/2015 Sandt DOT	Parallel Filled	Asphalt	Flat	Yes	No	No	Yes	Yes	96	1	1	1	26	66	3150	-71.20035788230	43.58027310100
3151	11/23/2015 Sandt DOT	Parallel Filled	Asphalt	Flat	Yes	No	No	Yes	Yes	96	1	1	1	26	66	3151	-71.20047263340	43.58044280980
3152	11/23/2015 Sandt DOT	Parallel Filled	Asphalt	Flat	Yes	No	No	Yes	Yes	64	2	1	1	51	32	3152	-71.20258820040	43.58167591930
3153	11/23/2015 Sandt DOT	Parallel Filled	Asphalt	Flat	Yes	No	No	Yes	Yes	96	1	5	1	26	66	3153	-71.20346767510	43.58202495680
3154	11/23/2015 Sandt DOT	Parallel Filled	Asphalt	Flat	Yes	No	No	Yes	Yes	96	1	5	1	26	66	3154	-71.20643418870	43.58369257880
3155	11/23/2015 Sandt DOT	Parallel Filled	Asphalt	Flat	Yes	No	No	Yes	No	64	1	3	1	53	29	3155	-71.19082715340	43.57526490400
3156	11/23/2015 Sandt DOT	Parallel Filled	Asphalt	Flat	Yes	No	No	Yes	No	64	1	3	1	53	29	3156	-71.18886034020	43.57467341660
3157	11/23/2015 Sandt DOT	Parallel Filled	Asphalt	Flat	Yes	No	No	Yes	Yes	96	1	3	1	26	66	3157	-71.18921603870	43.57466922580
3158	11/24/2015 Sandt DOT	Parallel	Asphalt	Flat	Yes	No	No	Yes	No	84	8	14	1	48	36	3158	-71.43981115890	43.80736659510
3159	11/24/2015 Sandt DOT	Parallel	Asphalt	Flat	No	No	No	Yes	No	84	14	3	1	18	77	3159	-71.43968678550	43.80736479420
3160	11/24/2015 Sandt DOT	Parallel	Asphalt	Flat	No	No	No	Yes	No	60	4	18	1	53	29	3160	-71.43965017770	43.80744209620
3161	11/24/2015 Nichols district 1	Parallel	Asphalt	Raised	No	No	No	Yes	No	65	2	1	1	33	56	3161	-71.18420285990	44.39140828900
3162	11/24/2015 Nichols district 1	Parallel	Asphalt	Raised	No	No	No	Yes	No	65	5	1	1	43	42	3162	-71.18740667140	44.39268701320
3163	11/24/2015 Nichols district 1	Hatched	Asphalt	Raised	Yes	No	No	Yes	No	75	1	2	1	26	66	3163	-71.18743333280	44.39276362600
3164	11/24/2015 Nichols district 1	Parallel	Asphalt	Raised	No	No	No	Yes	No	65	3	1	1	43	42	3164	-71.18856723710	44.39318844400
3165	11/24/2015 Nichols district 1	Parallel	Asphalt	Raised	No	No	No	Yes	No	65	1	1	1	33	56	3165	-71.18936570100	44.39352881450
3166	11/24/2015 Nichols district 1	Parallel	Asphalt	Raised	No	No	No	No	No	65	2	1	1	34	55	3166	-71.19013458980	44.39387039020
3167	11/24/2015 Nichols district 1	Hatched	Asphalt	Raised	Yes	No	No	Yes	No	75	1	3	1	26	66	3167	-71.19053989580	44.39407090630
3168	11/24/2015 Nichols district 1	Parallel	Asphalt	Raised	No	No	No	Yes	No	65	2	1	1	33	56	3168	-71.19088218630	44.39413641010
3169	11/24/2015 Nichols district 1	Parallel	Asphalt	Raised	Yes	No	No	Yes	No	65	6	2	1	63	15	3169	-71.19185763040	44.39448546300
3170	11/24/2015 Nichols district 1	Hatched	Asphalt	Raised	Yes	No	No	Yes	No	65	2	2	1	51	32	3170	-71.19369225940	44.39528672850
3171	11/24/2015 Sandt DOT	Hatched	Asphalt	Flat	No	No	No	No	No	77	1	4	1	7	92	3171	-71.42548571640	43.71946188460
4089	11/25/2015 Nichols district 1	Parallel	Asphalt	Raised	No	No	No	Yes	No	65	2	2	1	33	56	4089	-71.19448197720	44.39723467560
4090	11/25/2015 Nichols district 1	Parallel	Asphalt	Raised	No	No	No	No	No	75	1	2	1	9	89	4090	-71.19432217650	44.39667485820
4091	11/25/2015 Nichols district 1	Hatched	Asphalt	Raised	Yes	No	No	Yes	No	60	8	2	1	61	18	4091	-71.19519963400	44.39819155170
4092	11/25/2015 Nichols district 1	Hatched	Asphalt	Raised	Yes	No	No	Yes	No	60	5	2	1	61	18	4092	-71.19570681940	44.39870829590
4093	11/25/2015 Nichols district 1	Hatched	Asphalt	Raised	Yes	No	No	Yes	No	60	6	3	1	61	18	4093	-71.19634000380	44.39922738130
4094	11/25/2015 Sandt DOT	Hatched	Asphalt	Flat	Yes	No	No	Yes	No	75	1	6	1	36	52	4094	-71.23750314010	43.47313093410
4095	11/25/2015 Sandt DOT	Hatched	Asphalt	Flat	Yes	No	No	Yes	No	75	1	6	1	36	52	4095	-71.23774226230	43.47339190520
4096	11/25/2015 Sandt DOT	Hatched	Asphalt	Flat	Yes	No	No	Yes	No	75	1	6	1	36	52	4096	-71.23849860640	43.47421234730
4097	11/25/2015 Sandt DOT	Hatched	Asphalt	Flat	Yes	No	No	Yes	No	75	4	4	1	36	52	4097	-71.23364807670	43.47018632620
4098	11/25/2015 Sandt DOT	Hatched	Asphalt	Flat	Yes	No	No	Yes	No	84	3	11	1	46	38	4098	-71.23305521460	43.47036417370
4099	11/25/2015 Sandt DOT	Hatched	Asphalt	Flat	Yes	No	No	Yes	Yes	84	1	6	1	34	55	4099	-71.23286209440	43.47041568000
4100	11/25/2015 Sandt DOT	Hatched	Asphalt	Flat	Yes	No	No	Yes	No	70	4	9	1	71	4	4100	-71.23469962280	43.47010091600
4101	11/25/2015 Sandt DOT	Parallel Filled	Asphalt	Flat	Yes	No	No	No	No	70	12	9	1	74	0	4101	-71.23543395670	43.47011640440
4102	11/25/2015 Sandt DOT	Parallel Filled	Asphalt	Flat	Yes	No	No	No	No	70	12	5	1	64	14	4102	-71.23549941980	43.47007680000
4103	11/25/2015 Sandt DOT	Parallel Filled	Asphalt	Flat	Yes	No	No	No	No	78	1	4	1	29	62	4103	-71.23588737390	43.47088208330
4104	11/25/2015 Sandt DOT	Parallel Filled	Asphalt	Flat	Yes	No	No	No	No	78	1	4	1	29	62	4104	-71.23601501410	43.47119958720
4105	11/25/2015 Sandt DOT	Parallel Filled	Asphalt	Flat	Yes	No	No	No	No	78	1	4	1	29	62	4105	-71.23636084050	43.47176801930
4106	11/25/2015 Sandt DOT	Parallel Filled	Asphalt	Flat	No	No	No	No	No	90	2	2	1	9	89	4106	-71.22940979330	43.46485401470
4107	11/25/2015 Sandt DOT	Parallel Filled	Asphalt	Flat	No	No	No	No	No	74	2	2	1	9	89	4107	-71.22601954870	43.46001839760
4108	11/25/2015 Sandt DOT	Hatched	Asphalt	Retroreflective	Yes	No	No	No	Yes	72	2	2	1	48	36	4108	-71.21245523140	43.45164213910
4109	11/25/2015 Sandt DOT	Hatched	Asphalt	Retroreflective	Yes	No	No	No	Yes	72	2	3	1	48	36	4109	-71.21246920050	43.45182350700
4110	11/25/2015 Sandt DOT	Parallel	Asphalt	Flat	No	No	No	Yes	Yes	72	0	3	1	31	59	4110	-71.21372974370	43.45321685010
4111	11/25/2015 Sandt DOT	Parallel Filled	Asphalt	Flat	No	No	No	Yes	No	76	3	1	1	18	77	4111	-71.22038383060	43.45579252820
4112	11/25/2015 Sandt DOT	Parallel Filled	Asphalt	Flat	No	No	No	Yes	No	76	3	4	1	18	77	4112	-71.22054995960	43.45578515240
4113	11/25/2015 Sandt DOT	Parallel Filled	Asphalt	Flat	No	No	No	Yes	No	76	2	4	1	8	90	4113	-71.22058840820	43.45566696460
4114	11/25/2015 Sandt DOT	Parallel Filled	Asphalt	Flat	No	No	No	Yes	No	70	3	4	1	43	42	4114	-71.22126506890	43.45642763020
4115	11/25/2015 Sandt DOT	Parallel Filled	Asphalt	Flat	No	No	No	Yes	No	87	2	4	1	8	90	4115	-71.22127614930	43.45634326910
4116	11/25/2015 Sandt DOT	Parallel Filled	Asphalt	Flat	No	No	No	Yes	No	70	3	4	1	43	42	4116	-71.22153109470	43.45672280380
4117	11/25/2015 Sandt DOT	Parallel Filled	Asphalt	Flat	No	No	No	Yes	No	64	3	7	1	53	29	4117	-71.22195945880	43.45757222660
4118	11/25/2015 Sandt DOT	Parallel Filled	Asphalt	Flat	No	No	No	Yes	Yes	76	2	4	1	6	93	4118	-71.21991960930	43.45515702180
4119	11/25/2015 Sandt DOT	Parallel Filled	Asphalt	Flat	No	No	No	Yes	No	76	3	1	1	18	77	4119	-71.21961674080	43.45495263210
4120	11/25/2015 Sandt DOT	Parallel Filled	Asphalt	Flat	Yes	No	No	Yes	Yes	93	2	12	1	36	52	4120	-71.21913009760	43.45434206760
4121	11/25/2015 Sandt DOT	Parallel Filled	Asphalt	Flat	No	No	No	Yes	No	84	4	5	1	18	77	4121	-71.21725588360	43.45319831960
4122	11/25/2015 Sandt DOT	Parallel Filled	Asphalt	Flat	No	No	No	No	No	68	3	5	1	44	41	4122	-71.21850538440	43.45391328230
4123	11/25/2015 Sandt DOT	Parallel Filled	Asphalt	Flat	Yes	No	No	No	No	55	0	2	1	54	27	4123	-71.21930243910	43.45439660610
4124	11/30/2015 Sandt DOT	Hatched	Asphalt	Flat	Yes	No	No	Yes	No	72	1	1	1	51	32	4124	-71.53958756430	43.19340841810
4125	11/30/2015 Sandt DOT	Hatched	Asphalt	Flat	Yes	No	No	No	No	72	1	1	1	52	30	4125	-71.53995260600	43.19304989200
4126	11/30/2015 Sandt DOT	Parallel	Asphalt	Flat	No	Yes	No	Yes	Yes	108	1	1	1	5	95	4126	-71.53954642140	43.19420583090
4127	10/19/2015 Sandt DOT	Hatched	Asphalt	Flat	Yes	No	No	Yes	No	72	0	1	1	51	32	4127	-71.54061707710	43.19430362970
4128	11/30/2015 Sandt DOT	Parallel	Asphalt	Flat	Yes	Yes	No	Yes	Yes	108	1	3	1	25	67	4128	-71.54611600520	43.19223005550
4129	11/30/2015 Sandt DOT	Parallel	Asphalt	Flat	Yes	Yes	No	Yes	Yes	108	1	3	1	25	67	4129	-71.54585328300	43.19232705110
4130	11/30/2015 Sandt DOT	Parallel	Asphalt	Flat	Yes	Yes	No	Yes	Yes	108	3	1	1	35	53	4130	-71.54606799070	43.19235123290
4131	10/19/2015 Sandt DOT	Hatched	Asphalt	Flat	Yes	No	No	Yes	No	72	0	1	1	51	32	4131	-71.54049042070	43.19451943880
4132	11/30/2015 Sandt DOT	Parallel	Asphalt	Flat	No	Yes	No	Yes	Yes	108	2	2	1	5	95	4132	-71.53962436930	43.19443072680
4133	11/30/2015 Sandt DOT	Parallel	Asphalt	Flat	No	Yes	No	Yes	Yes	108	1	1	1	5	95	4133	-71.53942049850	43.19453171110
4134	11/30/2015 Sandt DOT	Parallel	Asphalt	Flat	No	Yes	No	Yes	Yes	108	2	2	1	5	95	4134	-71.53936494530	43.19434823190
4135	12/1/2015 Wilkinson District 1	Parallel	Asphalt	Raised	Yes	No	No	Yes	No	82	3	2	1	38	49	4135	-71.13248598420	44.77928470310

4136	12/1/2015 Sandt DOT	Parallel	Asphalt	Flat	Yes	No	No	Yes	No	96	4	2	1	38	49	4136	-71.52508244910	43.19316205600
4137	12/1/2015 Sandt DOT	Parallel	Asphalt	Flat	Yes	No	No	Yes	Yes	96	1	1	1	26	66	4137	-71.52540694480	43.19320697970
4138	12/1/2015 Sandt DOT	Parallel	Asphalt	Flat	Yes	No	No	Yes	Yes	96	1	1	1	26	66	4138	-71.52607188300	43.19335378080
4139	12/1/2015 Sandt DOT	Parallel	Asphalt	Flat	Yes	No	No	Yes	No	96	1	1	1	28	63	4139	-71.52669853220	43.19354857290
4140	12/1/2015 Sandt DOT	Parallel	Asphalt	Flat	Yes	No	No	Yes	Yes	96	1	1	1	26	66	4140	-71.52783334780	43.19428960290
4141	12/1/2015 Sandt DOT	Parallel	Asphalt	Flat	Yes	Yes	No	Yes	Yes	96	1	2	1	25	67	4141	-71.52776033360	43.19448492570
4142	12/1/2015 Sandt DOT	Parallel	Asphalt	Flat	Yes	Yes	No	Yes	Yes	96	1	2	1	25	67	4142	-71.52755208330	43.19451182160
4143	12/1/2015 Sandt DOT	Parallel	Asphalt	Flat	Yes	No	No	Yes	Yes	96	1	1	1	26	66	4143	-71.52627976170	43.19371140890
4144	12/1/2015 Sandt DOT	Parallel	Asphalt	Flat	Yes	No	No	Yes	Yes	96	1	1	1	26	66	4144	-71.52568331790	43.19363355260
4145	12/1/2015 Sandt DOT	Parallel	Asphalt	Flat	Yes	No	No	Yes	Yes	96	1	1	1	26	66	4145	-71.52517279510	43.19355115380
4146	12/3/2015 Sandt DOT	Parallel	Asphalt	Flat	Yes	No	No	Yes	No	96	1	1	1	28	63	4146	-71.67828426100	43.75985027840
4147	12/3/2015 Sandt DOT	Parallel	Asphalt	Flat	Yes	No	No	Yes	Yes	120	0	2	1	26	66	4147	-71.68220871600	43.75997414070
4148	12/3/2015 Sandt DOT	Parallel	Asphalt	Flat	Yes	No	No	Yes	Yes	96	0	2	1	26	66	4148	-71.68249424550	43.75986523940
4149	12/3/2015 Sandt DOT	Parallel	Asphalt	Flat	Yes	No	No	Yes	Yes	96	6	2	1	36	52	4149	-71.68398775750	43.75975364410
4150	12/3/2015 Sandt DOT	Parallel	Asphalt	Flat	Yes	No	No	Yes	Yes	5	5	2	1	61	18	4150	-71.68412966020	43.75985683360
4151	12/3/2015 Sandt DOT	Parallel	Asphalt	Flat	Yes	No	No	Yes	Yes	96	0	2	1	26	66	4151	-71.68660447200	43.75988910980
4152	12/3/2015 Sandt DOT	Parallel	Brick	Flat	Yes	No	No	Yes	Yes	96	2	2	1	32	58	4152	-71.68698473600	43.75998572810
4153	12/3/2015 Sandt DOT	Parallel	Asphalt	Flat	Yes	No	No	Yes	No	96	1	2	1	28	63	4153	-71.68459585050	43.75998270980
4154	12/3/2015 Sandt DOT	Parallel	Asphalt	Flat	Yes	No	No	No	No	96	1	1	1	29	62	4154	-71.67926723530	43.76006793670
4155	12/3/2015 Sandt DOT	Parallel	Asphalt	Flat	Yes	No	No	No	No	96	6	4	1	39	48	4155	-71.67553253020	43.76069951140
4156	12/3/2015 Sandt DOT	Parallel	Asphalt	Flat	Yes	No	No	No	No	96	2	2	1	29	62	4156	-71.67569844970	43.76062091030
4157	12/4/2015 Sandt DOT	Parallel Filled	Asphalt	Flat	Yes	No	No	No	Yes	96	1	6	1	37	51	4157	-71.68782460950	43.75446241740
4158	12/4/2015 Sandt DOT	Parallel Filled	Asphalt	Flat	Yes	No	No	No	Yes	96	1	6	1	37	51	4158	-71.68775359100	43.75554537520
4159	12/4/2015 Sandt DOT	Parallel Filled	Asphalt	Flat	Yes	No	No	No	No	96	2	0	1	29	62	4159	-71.68779873090	43.75698172920
4160	12/4/2015 Sandt DOT	Parallel Filled	Asphalt	Flat	Yes	No	No	Yes	No	96	9	4	1	38	49	4160	-71.68847138040	43.75726751970
4161	12/4/2015 Sandt DOT	Parallel Filled	Asphalt	Flat	Yes	No	No	No	No	96	1	4	1	29	62	4161	-71.68844355250	43.75755604580
4162	12/4/2015 Sandt DOT	Parallel Filled	Stamped Asphalt	Flat	Yes	No	Yes	No	No	96	1	4	1	32	58	4162	-71.68777219840	43.75827750990
4163	12/4/2015 Sandt DOT	Parallel Filled	Brick	Flat	Yes	No	Yes	No	No	96	8	1	1	44	41	4163	-71.68792638630	43.75838118660
4164	12/4/2015 Sandt DOT	Parallel Filled	Asphalt	Flat	Yes	No	No	No	Yes	96	1	4	1	27	64	4164	-71.68712390900	43.76403651300
4165	12/4/2015 Sandt DOT	Parallel Filled	Asphalt	Flat	Yes	No	No	No	No	96	1	4	1	29	62	4165	-71.68783751380	43.75752204520
4166	12/4/2015 Sandt DOT	Parallel Filled	Asphalt	Flat	Yes	No	No	Yes	No	96	2	6	1	38	49	4166	-71.68764123120	43.75694177710
4167	12/4/2015 Sandt DOT	Parallel Filled	Asphalt	Flat	Yes	No	No	Yes	No	84	2	2	1	28	63	4167	-71.63267567080	43.69517655140
4168	12/4/2015 Sandt DOT	Parallel Filled	Asphalt	Flat	Yes	No	No	Yes	No	84	2	2	1	28	63	4168	-71.63314426090	43.69519992500
4169	12/4/2015 Sandt DOT	Parallel Filled	Asphalt	Flat	Yes	No	No	No	Yes	84	1	2	1	27	64	4169	-71.63639990890	43.69588552040
4170	12/4/2015 Sandt DOT	Parallel Filled	Asphalt	Flat	Yes	No	No	Yes	No	60	12	4	1	63	15	4170	-71.63704861390	43.69631467630
4171	12/4/2015 Sandt DOT	Parallel Filled	Asphalt	Flat	Yes	No	No	Yes	No	60	2	4	1	53	29	4171	-71.63713782130	43.69628330860
4172	12/4/2015 Sandt DOT	Parallel Filled	Asphalt	Flat	Yes	No	No	Yes	No	84	1	2	1	28	63	4172	-71.63844977030	43.69693066170
4173	12/4/2015 Sandt DOT	Parallel Filled	Asphalt	Flat	Yes	No	No	Yes	No	78	11	8	1	48	36	4173	-71.63346652430	43.69517513570
4174	12/4/2015 Sandt DOT	Parallel Filled	Asphalt	Flat	Yes	No	No	Yes	No	96	2	3	1	28	63	4174	-71.63155145190	43.69509022160
4175	12/4/2015 Sandt DOT	Parallel Filled	Asphalt	Flat	Yes	No	No	Yes	No	96	3	5	1	38	49	4175	-71.63148447510	43.69515728460
4176	12/4/2015 Sandt DOT	Parallel Filled	Asphalt	Flat	Yes	No	No	Yes	No	78	2	3	1	28	63	4176	-71.63130084950	43.69541184040
4177	12/4/2015 Sandt DOT	Parallel Filled	Asphalt	Flat	Yes	No	No	Yes	No	78	9	3	1	38	49	4177	-71.63119481880	43.69541965660
4178	12/4/2015 Sandt DOT	Parallel Filled	Asphalt	Flat	Yes	No	No	Yes	No	78	6	8	1	48	36	4178	-71.63051400300	43.69499156880
4179	12/4/2015 Sandt DOT	Parallel Filled	Asphalt	Flat	Yes	No	No	Yes	No	78	1	6	1	38	49	4179	-71.62974968600	43.69452666880
4180	12/4/2015 Sandt DOT	Parallel Filled	Asphalt	Flat	Yes	No	No	Yes	No	78	13	5	1	38	49	4180	-71.62963838280	43.69403741810
4181	12/4/2015 Sandt DOT	Parallel Filled	Asphalt	Flat	Yes	No	No	Yes	No	78	6	10	1	48	36	4181	-71.62939208040	43.69345443550
4182	12/4/2015 Sandt DOT	Parallel Filled	Asphalt	Flat	Yes	No	No	Yes	No	78	7	6	1	48	36	4182	-71.62999406910	43.69460068180
4183	12/4/2015 Sandt DOT	Parallel Filled	Asphalt	Flat	Yes	No	No	Yes	No	96	2	3	1	28	63	4183	-71.63257804230	43.69526783970
4184	12/1/2015 Nichols	Parallel	Asphalt	Flat	No	No	No	No	Yes	90	1	2	1	7	92	4184	-71.51171357870	44.59586086220
4185	12/1/2015 Nichols	Parallel	Asphalt	Flat	Yes	No	No	Yes	No	84	1	1	1	28	63	4185	-71.51212765260	44.59726007690
4186	12/1/2015 Nichols	Parallel	Asphalt	Flat	No	No	No	Yes	No	72	1	0	1	33	56	4186	-71.51856206100	44.60124748940
4187	12/1/2015 Nichols	Parallel	Asphalt	Flat	No	No	No	Yes	Yes	72	3	1	1	41	45	4187	-71.51680460130	44.60008675740
4188	12/1/2015 Nichols	Parallel	Asphalt	Flat	No	No	No	Yes	Yes	65	0	4	1	31	59	4188	-71.51678782660	44.60017574120
4189	12/1/2015 Nichols	Parallel	Asphalt	Flat	No	No	No	Yes	Yes	76	2	4	1	6	93	4189	-71.51614268040	44.59970564390
4190	12/1/2015 Nichols	Hatched	Asphalt	Flat	No	No	No	Yes	Yes	72	3	2	1	39	48	4190	-71.51608611120	44.59979592750
4191	12/1/2015 Nichols	Parallel	Asphalt	Flat	No	No	No	Yes	Yes	74	2	1	1	6	93	4191	-71.51540173370	44.59925818690
4192	12/1/2015 Nichols	Hatched	Asphalt	Flat	No	No	No	No	Yes	70	0	1	1	30	60	4192	-71.51502276820	44.59914453040
4193	12/7/2015 Nichols	Parallel	Asphalt	Flat	No	No	No	No	No	72	5	3	1	44	41	4193	-71.51499327020	44.59922686460
4194	12/7/2015 Nichols	Parallel	Asphalt	Flat	Yes	No	No	Yes	No	90	1	1	1	28	63	4194	-71.51182628560	44.59766350130
4195	12/7/2015 Nichols	Parallel	Asphalt	Flat	No	No	No	Yes	No	76	0	3	1	8	90	4195	-71.51358506990	44.59896009710
4196	12/7/2015 Nichols	Parallel	Asphalt	Flat	No	No	No	Yes	No	76	0	3	1	8	90	4196	-71.51244207550	44.59893350370
4197	12/7/2015 Nichols	Parallel	Asphalt	Flat	No	No	No	Yes	No	96	0	6	1	18	77	4197	-71.51116988530	44.59893258010
4198	12/7/2015 Nichols	Parallel	Asphalt	Flat	No	No	No	Yes	No	96	0	6	1	18	77	4198	-71.51109537800	44.59887077520
4199	12/7/2015 Sandt DOT	Parallel	Asphalt	Flat	Yes	No	No	Yes	Yes	84	2	5	1	26	66	4199	-71.65211998360	43.60560595060
4200	12/7/2015 Sandt DOT	Parallel	Asphalt	Flat	Yes	No	No	Yes	Yes	84	2	5	1	26	66	4200	-71.65152411920	43.60567497580
4201	12/7/2015 Sandt DOT	Parallel	Asphalt	Flat	Yes	No	No	No	Yes	84	2	5	1	27	64	4201	-71.65071391280	43.60576689420
4202	12/7/2015 Wilkinson District 1	Parallel Filled	Asphalt	Flat	No	Yes	No	Yes	No	88	2	15	1	17	78	4202	-71.61011761820	44.37148919840
4203	12/7/2015 Sandt DOT	Hatched	Asphalt	Raised	Yes	No	No	Yes	No	72	2	1	1	51	32	4203	-71.73670086020	43.59127193770
4204	12/7/2015 Sandt DOT	Hatched	Asphalt	Raised	Yes	No	No	Yes	No	72	5	3	1	61	18	4204	-71.73668414040	43.59134443410
4205	12/7/2015 Sandt DOT	Hatched	Asphalt	Raised	Yes	No	No	Yes	Yes	72	2	1	1	49	34	4205	-71.73656879730	43.59121734200
4206	12/7/2015 Sandt DOT	Hatched	Asphalt	Raised	Yes	No	No	Yes	No	72	2	1	1	51	32	4206	-71.73635100870	43.59119812800
4207	12/7/2015 Sandt DOT	Hatched	Asphalt	Flat	Yes	No	No	Yes	No	84	11	8	1	46	38	4207	-71.73585981160	43.59196704360
4208	12/7/2015 Sandt DOT	Hatched	Asphalt	Flat	Yes	No	No	Yes	No	84	5	2	1	36	52	4208	-71.73572409060	43.59195758390
4209	12/7/2015 Sandt DOT	Hatched	Asphalt	Flat	Yes	No	No	Yes	No	84	9	2	1	36	52	4209	-71.73403302400	43.59294470940
4210	12/7/2015 Sandt DOT	Hatched	Asphalt	Raised	Yes	No	No	Yes	No	72	1	1	1	51	32	4210	-71.73599954700	43.59085153290
4211	12/7/2015 Sandt DOT	Hatched	Asphalt	Raised	Yes	No	No	Yes	Yes	72	0	1	1	49	34	4211	-71.73608472970	43.59081297640
4212	12/8/2015 Nichols district 1	Hatched	Asphalt	Flat	No	No	No	No	Yes	74	4	2	1	15	81	4212	-71.56257475880	44.48164272940
4213	12/8/2015 Nichols district 1	Hatched	Asphalt	Flat	No	No	No	No	No	62	2	0	1	32	58	4213	-71.56775068390	44.48547293270
4214	12/8/2015 Nichols district 1	Hatched	Asphalt	Flat	No	No	No	Yes	Yes	80	2	1	1	4	96	4214	-71.56793314600	44.48543012950
4215	12/8/2015 Nichols district 1	Hatched	Asphalt	Flat	No	No	No	No	No	84	2	3	1	7	92	4215	-71.56955122300	44.48726231920
4216	12/8/2015 Nichols district 1	Hatched	Asphalt	Flat	No	No	No	No	No	74	2	0	1	7	92	4216	-71.56949117300	44.48840788990
4217	12/8/2015 Nichols district 1	Hatched	Asphalt	Flat	No	No	No	Yes	No	74	3	3	1	16	79	4217	-71.56947834670	44.48855734840
4218	12/8/2015 Nichols district 1	Hatched	Asphalt	Flat	No	No	No	No	No	84	2	1	1	7	92	4218	-71.56941476450	44.48848494190
4219	12/8/2015 Melendy District 1	Parallel Filled	Asphalt	Flat	No	No	No	No	No	88	4	10	1	29	62	4219	-71.60918998110	44.37288517470
4220	12/8/2015 Melendy District 1	Parallel Filled	Asphalt	Flat	No	No	No	Yes	No	88	2	2	1	8	90	4220	-71.61200763160	44.37297408490
4221	12/8/2015 Melendy District 1	Parallel Filled	Asphalt	Flat	No	No	No	Yes	No	110	3	3	1	18	77	4221	-71.61177552250	44.37291290480
4222	12/8/2015 Melendy District 1	Parallel Filled	Asphalt	Flat	No	No	No	Yes	No	88	4	1	1	18	77	4222	-71.61133575250	44.37354169810
4223	12/8/2015 Melendy District 1	Parallel Filled	Asphalt	Flat	No	Yes	No	Yes	No	88	3	3	1	17	78	4223	-71.61138325590	44.37362565700
4224	12/8/2015 Melendy District 1	Parallel Filled	Asphalt	Flat	Yes	No	No	Yes	No	88	2	5	1	28	63	4224	-71.61186036380	44.37366097330

4225	12/8/2015 Melendy District 1	Parallel Filled	Asphalt	Flat	Yes	No	No	Yes	No	88	2	3	1	28	63	4225	-71.61270624120	44.37374896340
4226	12/8/2015 Melendy District 1	Parallel Filled	Asphalt	Flat	Yes	No	No	Yes	No	88	5	2	1	38	49	4226	-71.61266777680	44.37355366430
4227	12/9/2015 Sandt DOT	Hatched	Asphalt	Retroreflective	No	No	No	Yes	Yes	76	1	3	1	2	99	4227	-71.67527828870	42.89551910140
4228	12/9/2015 Sandt DOT	Parallel	Asphalt	Flat	Yes	No	No	Yes	No	67	3	1	1	63	15	4228	-71.67518554110	42.89537900460
4229	12/9/2015 Sandt DOT	Hatched	Asphalt	Retroreflective	No	No	No	No	No	76	1	3	1	5	95	4229	-71.67396584930	42.89386538420
4230	12/9/2015 Sandt DOT	Parallel	Asphalt	Flat	Yes	No	No	Yes	No	67	3	1	1	63	15	4230	-71.67400248970	42.89367798450
4231	12/9/2015 Sandt DOT	Parallel	Asphalt	Flat	Yes	No	No	No	No	65	5	3	1	64	14	4231	-71.67406349150	42.89475108840
4232	12/9/2015 Sandt DOT	Parallel	Asphalt	Flat	Yes	No	No	No	No	65	1	1	1	54	27	4232	-71.67424896380	42.89497996790
4233	12/9/2015 Sandt DOT	Parallel Filled	Asphalt	Flat	Yes	No	No	No	Yes	96	1	2	1	27	64	4233	-71.98844541680	43.41663775830
4234	12/9/2015 Sandt DOT	Parallel Filled	Asphalt	Flat	Yes	No	No	No	Yes	96	1	2	1	27	64	4234	-71.98768566400	43.41611547130
4235	12/9/2015 Sandt DOT	Parallel Filled	Asphalt	Flat	Yes	No	No	Yes	Yes	96	1	2	1	26	66	4235	-71.98668024940	43.41536565880
4236	12/9/2015 Sandt DOT	Parallel Filled	Asphalt	Flat	Yes	No	No	Yes	Yes	96	3	2	1	36	52	4236	-71.98510209050	43.41444377070
4237	12/9/2015 Sandt DOT	Parallel Filled	Asphalt	Flat	Yes	No	No	No	Yes	96	1	2	1	27	64	4237	-71.98479428870	43.41444707210
4238	12/24/2015 Sandt DOT	Parallel Filled	Asphalt	Flat	Yes	No	No	No	No	96	1	2	1	29	62	4238	-71.98487276300	43.41428880930
4239	12/9/2015 Sandt DOT	Parallel Filled	Asphalt	Flat	Yes	No	No	Yes	Yes	96	1	2	1	26	66	4239	-71.98444663260	43.41420215400
4240	12/9/2015 Nichols district 1	Hatched	Asphalt	Flat	No	No	No	Yes	Yes	86	2	9	1	14	82	4240	-71.58141771080	44.49655270630
4241	12/9/2015 Nichols district 1	Hatched	Asphalt	Flat	No	No	No	Yes	No	62	0	3	1	31	59	4241	-71.56970486890	44.48727418820
4242	12/9/2015 Nichols district 1	Hatched	Asphalt	Flat	No	No	No	Yes	No	72	1	6	1	41	45	4242	-71.56960696940	44.48771305540
4243	12/9/2015 Nichols district 1	Hatched	Asphalt	Flat	No	No	No	No	No	72	0	3	1	32	58	4243	-71.56958701440	44.48911334410
4244	12/9/2015 Nichols district 1	Hatched	Asphalt	Flat	No	No	No	No	No	74	1	2	1	7	92	4244	-71.56963321560	44.48941003580
4245	12/9/2015 Nichols district 1	Hatched	Asphalt	Flat	No	No	No	Yes	No	70	1	4	1	31	59	4245	-71.56968208080	44.48970819980
4246	12/9/2015 Nichols district 1	Hatched	Asphalt	Flat	No	No	No	No	No	74	3	1	1	17	78	4246	-71.56955333430	44.48967833650
4247	12/9/2015 Nichols district 1	Hatched	Asphalt	Flat	No	No	No	Yes	No	72	4	3	1	41	45	4247	-71.56983823860	44.49077372990
4248	12/9/2015 Nichols district 1	Hatched	Asphalt	Flat	No	No	No	Yes	No	74	1	4	1	6	93	4248	-71.57004678840	44.49093645780
4249	12/9/2015 Nichols district 1	Hatched	Asphalt	Flat	No	No	No	No	No	74	1	4	1	7	92	4249	-71.57029168760	44.49143849920
4250	12/9/2015 Nichols district 1	Hatched	Asphalt	Flat	No	No	No	Yes	No	70	0	1	1	31	59	4250	-71.57185653690	44.49339788380
4251	12/9/2015 Nichols district 1	Hatched	Asphalt	Flat	No	No	No	Yes	No	70	3	0	1	41	45	4251	-71.57182996180	44.49348336710
4252	12/9/2015 Nichols district 1	Hatched	Asphalt	Flat	No	No	No	No	No	62	0	3	1	32	58	4252	-71.57296339910	44.49423645680
4253	12/9/2015 Nichols district 1	Hatched	Asphalt	Flat	No	No	No	No	No	62	3	3	1	42	44	4253	-71.57348393980	44.49476576010
4254	12/9/2015 Nichols district 1	Hatched	Asphalt	Flat	No	No	No	No	No	74	0	2	1	7	92	4254	-71.57516501800	44.49597351390
4255	12/9/2015 Nichols district 1	Hatched	Asphalt	Flat	No	No	No	Yes	Yes	74	1	1	1	4	96	4255	-71.57476405970	44.49858895490
4256	12/10/2015 Wilkinson District 1	Parallel Filled	Asphalt	Raised	No	Yes	No	Yes	No	86	2	3	1	7	92	4256	-71.69708048270	44.27968321440
4257	12/10/2015 Wilkinson District 1	Parallel Filled	Asphalt	Raised	No	Yes	No	Yes	No	80	2	8	1	17	78	4257	-71.69278099600	44.27996291290
4258	12/10/2015 Wilkinson District 1	Parallel Filled	Asphalt	Raised	No	Yes	No	Yes	No	80	3	5	1	17	78	4258	-71.69025413180	44.28013769780
4259	12/10/2015 Wilkinson District 1	Parallel Filled	Asphalt	Raised	No	Yes	No	Yes	No	65	3	5	1	42	44	4259	-71.68880645690	44.28022443170
4260	12/10/2015 Wilkinson District 1	Parallel Filled	Asphalt	Raised	No	Yes	No	Yes	No	90	2	8	1	17	78	4260	-71.68763168540	44.28024556340
4261	12/10/2015 Wilkinson District 1	Parallel Filled	Asphalt	Raised	No	Yes	No	Yes	No	75	5	5	1	17	78	4261	-71.68753122940	44.28030902920
4262	12/10/2015 Wilkinson District 1	Parallel Filled	Asphalt	Raised	No	Yes	No	Yes	No	90	3	7	1	27	64	4262	-71.68624337190	44.28042627710
4263	12/10/2015 Wilkinson District 1	Parallel Filled	Asphalt	Raised	No	Yes	No	Yes	Yes	100	5	5	1	15	81	4263	-71.68085897190	44.28079814430
4264	12/10/2015 Wilkinson District 1	Parallel Filled	Asphalt	Raised	No	Yes	No	Yes	No	85	3	2	1	17	78	4264	-71.68709831810	44.28041681360
4265	12/10/2015 Sandt DOT	Parallel Filled	Asphalt	Flat	Yes	No	No	Yes	No	84	4	5	1	38	49	4265	-71.45695423010	43.60432807280
4266	12/10/2015 Sandt DOT	Parallel Filled	Asphalt	Flat	Yes	No	No	Yes	Yes	84	1	10	1	36	52	4266	-71.45677331790	43.60415040100
4267	12/10/2015 Sandt DOT	Parallel Filled	Asphalt	Flat	Yes	No	No	Yes	Yes	156	5	7	1	46	38	4267	-71.45736806680	43.60423145840
4268	12/10/2015 Sandt DOT	Parallel Filled	Asphalt	Flat	Yes	No	No	Yes	No	78	1	1	1	28	63	4268	-71.46417722720	43.60581431030
4269	11/10/2015 Sandt DOT	Parallel	Asphalt	Flat	Yes	No	No	Yes	No	84	3	2	1	38	49	4269	-70.83327034670	42.95585581440
4270	11/10/2015 Sandt DOT	Parallel	Asphalt	Flat	Yes	No	No	Yes	No	84	2	1	1	28	63	4270	-70.83299606700	42.95459092880
4271	11/10/2015 Sandt DOT	Parallel	Asphalt	Flat	Yes	No	No	Yes	Yes	84	1	2	1	26	66	4271	-70.83310132470	42.95447669610
4272	11/10/2015 Sandt DOT	Parallel	Asphalt	Flat	Yes	No	No	Yes	Yes	84	2	1	1	26	66	4272	-70.83266311930	42.95234114290
4273	11/10/2015 Sandt DOT	Parallel	Asphalt	Flat	Yes	No	No	Yes	Yes	84	2	1	1	26	66	4273	-70.83298748260	42.94654301720
4274	11/10/2015 Sandt DOT	Parallel	Asphalt	Flat	Yes	No	No	Yes	Yes	84	2	1	1	26	66	4274	-70.83364898740	42.94537120260
4275	11/10/2015 Sandt DOT	Parallel	Asphalt	Flat	Yes	No	No	Yes	Yes	84	2	1	1	26	66	4275	-70.83380627640	42.94545766180
4276	11/10/2015 Sandt DOT	Parallel	Asphalt	Flat	Yes	No	No	Yes	Yes	84	2	1	1	26	66	4276	-70.83598220700	42.94379167990
4277	11/10/2015 Sandt DOT	Parallel	Asphalt	Flat	Yes	No	No	Yes	Yes	84	2	1	1	26	66	4277	-70.83254714570	42.95229718780
4278	11/10/2015 Sandt DOT	Parallel	Asphalt	Flat	Yes	No	No	Yes	Yes	84	2	1	1	26	66	4278	-70.83221446210	42.95037429570
4279	11/10/2015 Sandt DOT	Parallel	Asphalt	Flat	Yes	No	No	Yes	Yes	84	2	1	1	26	66	4279	-70.83212338940	42.94894796230
4280	11/10/2015 Sandt DOT	Parallel	Asphalt	Flat	Yes	No	No	Yes	Yes	84	2	1	1	26	66	4280	-70.83245494550	42.94799846110
4281	11/10/2015 Sandt DOT	Parallel	Asphalt	Flat	Yes	No	No	Yes	Yes	84	2	1	1	26	66	4281	-70.83310250980	42.94649823780
4282	11/10/2015 Sandt DOT	Parallel	Asphalt	Flat	Yes	No	No	Yes	Yes	84	2	1	1	26	66	4282	-70.83368290840	42.94545619160
4283	11/10/2015 Sandt DOT	Parallel	Asphalt	Flat	Yes	No	No	Yes	Yes	84	2	1	1	26	66	4283	-70.83375993370	42.94537297990
4284	11/10/2015 Sandt DOT	Parallel	Asphalt	Flat	Yes	No	No	Yes	Yes	84	2	1	1	26	66	4284	-70.83451843370	42.94481176130
4285	11/10/2015 Sandt DOT	Parallel	Asphalt	Flat	Yes	No	No	Yes	Yes	84	2	1	1	26	66	4285	-70.83614954170	42.94377170660
4286	11/10/2015 Sandt DOT	Parallel	Asphalt	Flat	Yes	No	No	Yes	Yes	84	1	6	1	36	52	4286	-70.83781744200	42.94188915190
4287	11/10/2015 Sandt DOT	Parallel	Asphalt	Flat	Yes	No	No	Yes	Yes	84	2	1	1	26	66	4287	-70.83453264020	42.94491135300
4288	12/14/2015 Sandt DOT	Hatched	Asphalt	Flat	Yes	No	No	Yes	No	84	1	8	1	36	52	4288	-71.74581684500	43.59670823540
4289	12/14/2015 Sandt DOT	Hatched	Asphalt	Flat	Yes	No	No	Yes	No	84	3	1	1	36	52	4289	-71.74571713660	43.59667953770
4290	12/14/2015 Sandt DOT	Hatched	Asphalt	Flat	Yes	No	No	Yes	Yes	84	2	8	1	34	55	4290	-71.74230197900	43.59284105620
4291	12/14/2015 Sandt DOT	Hatched	Asphalt	Flat	Yes	No	No	Yes	No	84	5	7	1	46	38	4291	-71.74329367750	43.59391852150
4292	12/14/2015 Sandt DOT	Hatched	Asphalt	Flat	Yes	No	No	Yes	Yes	72	2	1	1	49	34	4292	-71.73791904530	43.59102559300
4293	12/14/2015 Sandt DOT	Hatched	Asphalt	Flat	Yes	No	No	Yes	Yes	72	3	3	1	59	21	4293	-71.74001262500	43.59082605710
4294	12/14/2015 Sandt DOT	Hatched	Asphalt	Flat	Yes	No	No	Yes	Yes	72	2	3	1	49	34	4294	-71.73995361710	43.59093221370
4295	12/14/2015 Patch district 1	Hatched	Asphalt	Flat	Yes	No	No	Yes	Yes	96	3	4	1	34	55	4295	-71.80066398100	44.30787425200
4296	12/14/2015 Patch district 1	Parallel	Asphalt	Raised	No	No	No	Yes	Yes	100	7	5	1	16	79	4296	-71.79948847600	44.30811801480
4297	12/14/2015 Patch district 1	Parallel	Asphalt	Raised	Yes	No	No	Yes	Yes	103	1	2	1	26	66	4297	-71.79787860210	44.30822453810
4298	12/14/2015 Patch district 1	Parallel	Asphalt	Raised	Yes	No	No	Yes	Yes	67	2	2	1	51	32	4298	-71.79796965730	44.30827700000
4299	12/14/2015 Patch district 1	Parallel	Asphalt	Raised	Yes	No	No	Yes	Yes	106	1	1	1	26	66	4299	-71.79969729030	44.30817114970
4300	12/14/2015 Patch district 1	Parallel	Asphalt	Raised	Yes	No	No	Yes	No	80	4	4	1	38	49	4300	-71.80072374280	44.30801908010
4301	12/14/2015 Patch district 1	Parallel	Asphalt	Raised	Yes	No	No	Yes	No	80	1	5	1	28	63	4301	-71.80109259410	44.30784384100
4302	12/14/2015 Patch district 1	Parallel	Asphalt	Raised	Yes	No	No	Yes	Yes	80	2	2	1	26	66	4302	-71.79670090630	44.30834671020
4303	12/14/2015 Patch district 1	Parallel	Asphalt	Raised	Yes	No	No	Yes	Yes	84	2	4	1	26	66	4303	-71.79651169570	44.30831378080
4304	12/14/2015 Patch district 1	Parallel	Asphalt	Raised	Yes	No	No	Yes	Yes	70	3	1	1	61	18	4304	-71.79782798450	44.30819955460
4305	12/15/2015 Wilkinson District 1	Parallel	Asphalt	Raised	No	No	No	Yes	No	85	1	1	1	8	90	4305	-71.75212284240	44.30787737360
4306	12/15/2015 Wilkinson District 1	Hatched	Asphalt	Raised	No	No	No	Yes	No	96	0	4	1	6	93	4306	-71.75625514440	44.30819365120
4307	12/15/2015 Wilkinson District 1	Parallel Filled	Asphalt	Raised	No	No	No	Yes	Yes	110	1	3	1	6	93	4307	-71.75936078340	44.30871345220
4308	12/15/2015 Wilkinson District 1	Hatched	Asphalt	Raised	No	No	No	Yes	No	85	1	4	1	6	93	4308	-71.76185689430	44.30916043190
4309	12/15/2015 Wilkinson District 1	Hatched	Asphalt	Raised	No	No	No	Yes	No	102	1	3	1	6	93	4309	-71.76311844540	44.30891515630
4310	12/15/2015 Wilkinson District 1	Parallel	Asphalt	Raised	No	No	No	Yes	Yes	80	1	2	1	6	93	4310	-71.76436554690	44.30869370860
4311	12/15/2015 Wilkinson District 1	Parallel	Asphalt	Raised	Yes	No	No	Yes	Yes	80	1	3	1	26	66	4311	-71.76443901920	44.30861663020
4312	12/15/2015 Wilkinson District 1	Hatched	Asphalt	Raised	Yes	No	No	Yes	No	104	2	5	1	26	66	4312	-71.76761771550	44.30694790800
4313	12/15/2015 Nichols district 1	Parallel	Asphalt	Raised	No	No	No	Yes	No	96	2	8	1	18	77	4313	-71.77580257590	44.30725081100

4314	12/15/2015	Nichols district 1	Parallel	Asphalt	Raised	Yes	No	No	Yes	Yes	84	2	1	1	26	66	4314	-71.78844525110	44.30926176820
4315	12/15/2015	Nichols district 1	Parallel	Asphalt	Raised	Yes	No	No	Yes	Yes	84	2	1	1	26	66	4315	-71.78835366520	44.30919353810
4316	12/15/2015	Nichols district 1	Parallel	Asphalt	Raised	Yes	No	No	Yes	Yes	84	2	1	1	26	66	4316	-71.78842514580	44.30914860460
4317	12/15/2015	Nichols district 1	Hatched	Asphalt	Raised	No	No	No	Yes	No	80	1	2	1	6	93	4317	-71.78467165550	44.30851584690
4318	12/15/2015	Nichols district 1	Hatched	Asphalt	Raised	No	No	No	Yes	No	90	0	5	1	6	93	4318	-71.77889124780	44.30796198900
4319	12/15/2015	Nichols district 1	Hatched	Asphalt	Flat	Yes	No	No	Yes	No	90	1	1	1	26	66	4319	-71.77720169330	44.30760821490
4320	12/15/2015	Sandt DOT	Hatched	Asphalt	Flat	Yes	No	No	Yes	No	72	9	2	1	61	18	4320	-71.58882949530	43.44537407430
4321	12/15/2015	Sandt DOT	Hatched	Asphalt	Flat	Yes	No	No	Yes	Yes	72	7	2	1	59	21	4321	-71.58872878670	43.44534176150
4322	12/15/2015	Sandt DOT	Hatched	Asphalt	Flat	Yes	No	No	Yes	Yes	72	1	4	1	49	34	4322	-71.58878666390	43.44620868070
4323	12/15/2015	Sandt DOT	Hatched	Asphalt	Flat	Yes	No	No	Yes	Yes	72	7	6	1	69	7	4323	-71.58873585970	43.44470331160
4324	12/15/2015	Sandt DOT	Hatched	Asphalt	Flat	Yes	No	No	Yes	Yes	72	12	4	1	59	21	4324	-71.58873901800	43.44421047270
4325	12/15/2015	Sandt DOT	Parallel	Asphalt	Flat	Yes	No	No	Yes	No	72	4	6	1	73	1	4325	-71.58882753070	43.44230399460
4326	12/15/2015	Sandt DOT	Parallel Filled	Asphalt	Flat	Yes	No	No	Yes	No	90	6	2	1	38	49	4326	-71.58854044520	43.44218436160
4327	12/15/2015	Sandt DOT	Parallel Filled	Asphalt	Flat	Yes	No	No	Yes	No	72	4	6	1	73	1	4327	-71.58856768680	43.44206209090
4328	12/15/2015	Sandt DOT	Parallel Filled	Asphalt	Flat	Yes	No	No	Yes	No	77	1	4	1	28	63	4328	-71.58904620970	43.44223811080
4329	12/15/2015	Sandt DOT	Parallel	Asphalt	Flat	Yes	No	No	No	No	72	7	1	1	64	14	4329	-71.58772046770	43.44241076680
4330	12/15/2015	Sandt DOT	Parallel Filled	Asphalt	Flat	Yes	No	No	Yes	No	100	1	2	1	28	63	4330	-71.58688336690	43.44291773850
4331	12/15/2015	Sandt DOT	Parallel	Asphalt	Flat	Yes	Yes	No	Yes	Yes	80	1	3	1	25	67	4331	-71.57727794310	43.44834480440
4332	12/15/2015	Sandt DOT	Parallel	Asphalt	Flat	Yes	Yes	No	Yes	Yes	80	1	4	1	25	67	4332	-71.57399395810	43.45159360730
4333	12/16/2015	Wilkinson District 1	Hatched	Asphalt	Raised	No	No	No	Yes	Yes	103	1	3	1	4	96	4333	-71.76986340820	44.30498016320
4334	12/16/2015	Nichols district 1	Parallel	Asphalt	Raised	Yes	No	No	Yes	No	92	4	1	1	38	49	4334	-71.77550154930	44.30731764750
4335	12/16/2015	Nichols district 1	Parallel	Asphalt	Raised	No	No	No	Yes	No	92	6	1	1	18	77	4335	-71.77390157360	44.30695938100
4336	12/16/2015	Nichols district 1	Parallel	Asphalt	Raised	No	No	No	No	No	96	7	1	1	19	75	4336	-71.77285280590	44.30672875380
4337	12/16/2015	Nichols district 1	Parallel	Asphalt	Raised	No	No	No	No	No	96	5	3	1	19	75	4337	-71.77222674930	44.30659532950
4338	12/16/2015	Nichols district 1	Parallel	Asphalt	Raised	No	No	No	Yes	No	96	5	2	1	18	77	4338	-71.77178794560	44.30649556680
4339	12/16/2015	Nichols district 1	Parallel	Asphalt	Raised	No	No	No	Yes	Yes	96	1	2	1	6	93	4339	-71.77132838870	44.30631390230
4340	12/16/2015	Nichols district 1	Parallel	Asphalt	Flat	No	No	No	Yes	Yes	100	3	1	1	16	79	4340	-71.77281893880	44.30664684410
4341	12/16/2015	Nichols district 1	Parallel	Asphalt	Flat	No	No	No	Yes	Yes	100	1	2	1	6	93	4341	-71.77387600980	44.30687083160
4342	12/16/2015	Nichols district 1	Parallel	Asphalt	Flat	No	No	No	Yes	Yes	100	1	2	1	6	93	4342	-71.77514239280	44.30716343200
4343	12/15/2015	Nichols district 1	Parallel	Asphalt	Raised	No	No	No	No	No	96	1	1	1	9	89	4343	-71.77523948220	44.30711431690
4344	12/15/2015	Nichols district 1	Parallel	Asphalt	Raised	No	No	No	No	No	96	5	5	1	19	75	4344	-71.77453879200	44.30697149360
4345	12/15/2015	Nichols district 1	Parallel	Asphalt	Raised	No	No	No	No	No	96	1	1	1	9	89	4345	-71.77271495530	44.30656252190
4346	12/15/2015	Nichols district 1	Parallel	Asphalt	Raised	No	No	No	No	No	96	1	1	1	9	89	4346	-71.77119989490	44.30622714380
4347	12/15/2015	Nichols district 1	Parallel	Asphalt	Raised	No	No	No	No	No	96	1	5	1	9	89	4347	-71.77054979570	44.30609451800
4348	12/16/2015	Sandt DOT	Parallel Filled	Asphalt	Flat	Yes	No	No	Yes	No	72	2	7	1	63	15	4348	-71.58987851750	43.44250310180
4349	12/16/2015	Sandt DOT	Parallel Filled	Asphalt	Flat	Yes	No	No	Yes	No	72	2	7	1	63	15	4349	-71.59100987810	43.44295956040
4350	12/16/2015	Sandt DOT	Parallel	Asphalt	Flat	Yes	No	No	Yes	Yes	84	0	4	1	26	66	4350	-71.59183632560	43.44318374160
4351	12/16/2015	Sandt DOT	Parallel	Asphalt	Flat	Yes	No	No	Yes	Yes	68	6	8	1	71	4	4351	-71.59188084330	43.44327809540
4352	12/16/2015	Sandt DOT	Parallel Filled	Asphalt	Flat	Yes	No	No	Yes	Yes	84	3	1	1	36	52	4352	-71.59164124660	43.44329070970
4353	12/16/2015	Sandt DOT	Parallel	Asphalt	Flat	Yes	No	No	Yes	Yes	68	2	1	1	51	32	4353	-71.59160256410	43.44319568050
4354	12/16/2015	Sandt DOT	Parallel	Asphalt	Flat	Yes	No	No	Yes	No	84	1	8	1	38	49	4354	-71.59092862500	43.44298966380
4355	12/16/2015	Sandt DOT	Parallel	Asphalt	Flat	Yes	No	No	Yes	No	72	1	1	1	53	29	4355	-71.59296229600	43.44360264280
4356	12/16/2015	Sandt DOT	Parallel	Asphalt	Flat	Yes	No	No	Yes	No	72	1	1	1	53	29	4356	-71.59292462900	43.44366171060
4357	12/16/2015	Sandt DOT	Parallel Filled	Asphalt	Flat	Yes	No	No	Yes	No	76	10	1	1	38	49	4357	-71.59494357880	43.44318770660
4358	12/16/2015	Sandt DOT	Parallel	Asphalt	Flat	Yes	No	No	Yes	No	79	6	2	1	38	49	4358	-71.59757890270	43.44393043820
4359	12/16/2015	Wilkinson District 1	Parallel	Asphalt	Raised	Yes	No	No	Yes	Yes	80	9	1	1	36	52	4359	-71.77026356300	44.30606303370
4360	12/16/2015	Wilkinson District 1	Parallel	Asphalt	Raised	Yes	No	No	Yes	Yes	96	2	6	1	36	52	4360	-71.77037739780	44.30613733470
4361	12/16/2015	Wilkinson District 1	Parallel	Asphalt	Raised	Yes	No	No	Yes	Yes	96	6	1	1	36	52	4361	-71.77119149200	44.30635875000
4362	12/16/2015	Wilkinson District 1	Parallel	Asphalt	Raised	Yes	No	No	Yes	Yes	96	7	7	1	46	38	4362	-71.77016515280	44.30612860940
4363	12/17/2015	Nichols district 1	Hatched	Asphalt	Raised	Yes	No	No	Yes	Yes	72	0	2	1	49	34	4363	-71.91784736370	44.20838833080
4364	12/17/2015	Nichols district 1	Hatched	Asphalt	Raised	Yes	No	No	Yes	No	72	4	2	1	61	18	4364	-71.91610147940	44.21076246750
4365	12/17/2015	Sandt DOT	Parallel Filled	Asphalt	Flat	Yes	No	No	Yes	No	78	1	2	1	28	63	4365	-71.60048108510	43.44560132440
4366	12/17/2015	Sandt DOT	Hatched	Asphalt	Flat	No	No	No	Yes	No	70	2	4	1	31	59	4366	-71.59248752660	43.43668031620
4367	12/17/2015	Sandt DOT	Hatched	Asphalt	Flat	No	No	No	Yes	No	70	1	10	1	41	45	4367	-71.59262380970	43.43762179170
4368	12/17/2015	Sandt DOT	Hatched	Asphalt	Flat	No	No	No	Yes	No	70	0	1	1	31	59	4368	-71.59304009040	43.43999438500
4369	12/17/2015	Sandt DOT	Hatched	Asphalt	Flat	No	No	No	Yes	No	78	4	3	1	16	79	4369	-71.59308519690	43.44198973420
4370	12/17/2015	Sandt DOT	Hatched	Asphalt	Flat	No	No	No	Yes	No	72	2	5	1	31	59	4370	-71.59271647990	43.44244251360
4371	12/18/2015	Sandt DOT	Parallel	Asphalt	Flat	Yes	No	No	Yes	Yes	84	2	4	1	26	66	4371	-71.46287797310	43.70898352360
4372	12/18/2015	Sandt DOT	Parallel	Asphalt	Flat	Yes	No	No	Yes	Yes	84	7	3	1	36	52	4372	-71.46231552120	43.70919219220
4373	12/18/2015	Sandt DOT	Parallel	Asphalt	Flat	Yes	No	No	Yes	Yes	84	4	6	1	46	38	4373	-71.46209197520	43.70917111200
4374	12/18/2015	Sandt DOT	Parallel	Asphalt	Flat	Yes	No	No	Yes	Yes	82	3	5	1	36	52	4374	-71.46080417980	43.70940029350
4375	12/18/2015	Sandt DOT	Parallel Filled	Asphalt	Flat	Yes	No	No	Yes	No	60	4	14	1	73	1	4375	-71.49032700360	43.66566157430
4376	12/18/2015	Sandt DOT	Parallel Filled	Asphalt	Flat	Yes	No	No	Yes	No	80	3	3	1	38	49	4376	-71.49353073250	43.66200758030
4377	12/18/2015	Sandt DOT	Hatched	Asphalt	Raised	Yes	No	No	Yes	Yes	96	2	1	1	24	68	4377	-71.49376420450	43.66172210610
4378	12/18/2015	Sandt DOT	Parallel	Asphalt	Flat	Yes	No	No	Yes	No	90	2	4	1	28	63	4378	-71.49333187390	43.66185005090
4379	12/18/2015	Sandt DOT	Hatched	Asphalt	Flat	Yes	No	No	Yes	No	90	3	4	1	36	52	4379	-71.49642712060	43.66065451830
4380	12/18/2015	Sandt DOT	Hatched	Asphalt	Flat	Yes	No	No	Yes	No	90	3	4	1	36	52	4380	-71.49689374250	43.66009059150
4381	12/18/2015	Sandt DOT	Parallel Filled	Asphalt	Flat	Yes	No	No	Yes	No	84	1	1	1	28	63	4381	-71.49704262780	43.65969561720
4382	12/18/2015	Sandt DOT	Parallel Filled	Stamped Asphalt	Flat	Yes	No	No	No	Yes	80	2	8	1	41	45	4382	-71.49692062800	43.65951527130
4383	12/21/2015	Patch district 1	Hatched	Asphalt	Flat	Yes	No	No	Yes	Yes	60	8	5	1	59	21	4383	-71.91150853220	44.21323059290
4384	12/21/2015	Patch district 1	Hatched	Asphalt	Flat	Yes	No	No	Yes	No	72	1	2	1	51	32	4384	-71.91149732870	44.21329178270
4385	12/21/2015	Patch district 1	Hatched	Asphalt	Flat	Yes	No	No	Yes	Yes	72	5	7	1	69	7	4385	-71.91105501590	44.21351142440
4386	12/21/2015	Patch district 1	Hatched	Asphalt	Flat	Yes	No	No	Yes	Yes	72	10	3	1	59	21	4386	-71.91090202650	44.21351142450
4387	12/21/2015	Patch district 1	Hatched	Asphalt	Flat	No	No	No	Yes	Yes	72	1	4	1	29	62	4387	-71.91047331060	44.21380748060
4388	12/21/2015	Patch district 1	Hatched	Asphalt	Flat	Yes	No	No	Yes	Yes	72	6	6	1	69	7	4388	-71.90994085960	44.21389382200
4389	12/21/2015	Patch district 1	Hatched	Asphalt	Flat	No	No	No	Yes	Yes	72	2	2	1	29	62	4389	-71.90972643400	44.21399138750
4390	12/21/2015	Patch district 1	Hatched	Asphalt	Flat	No	No	No	Yes	Yes	72	3	3	1	39	48	4390	-71.90873729690	44.21427090740
4391	12/21/2015	Patch district 1	Hatched	Asphalt	Flat	No	No	No	Yes	Yes	72	1	7	1	39	48	4391	-71.90636517520	44.21549238230
4392	12/21/2015	Patch district 1	Hatched	Asphalt	Flat	No	No	No	Yes	Yes	72	1	4	1	29	62	4392	-71.90574122990	44.21596841570
4393	12/23/2015	Sandt DOT	Hatched	Asphalt	Flat	Yes	No	No	Yes	Yes	96	1	4	1	24	68	4393	-71.82665047470	43.43669237120
4394	12/23/2015	Sandt DOT	Hatched	Asphalt	Flat	Yes	No	No	No	No	96	1	2	1	27	64	4394	-71.82527960580	43.43673325020
4395	12/23/2015	Sandt DOT	Hatched	Asphalt	Flat	Yes	No	No	No	No	64	1	1	1	52	30	4395	-71.82378280990	43.43681003730
4396	12/23/2015	Sandt DOT	Hatched	Asphalt	Flat	Yes	No	No	No	No	96	1	15	1	37	51	4396	-71.82369457920	43.43672951450
4397	12/23/2015	Sandt DOT	Hatched	Asphalt	Flat	Yes	No	No	No	Yes	96	1	2	1	25	67	4397	-71.82310063580	43.43672183960
4398	12/23/2015	Sandt DOT	Hatched	Asphalt	Flat	Yes	No	No	No	No	72	1	2	1	52	30	4398	-71.82289470300	43.43661965080
4399	12/23/2015	Sandt DOT	Hatched	Asphalt	Flat	Yes	No	No	No	Yes	96	3	15	1	45	40	4399	-71.82219426370	43.43666745360
4400	12/23/2015	Sandt DOT	Hatched	Asphalt	Flat	Yes	No	No	Yes	No	72	2	8	1	61	18	4400	-71.82121449120	43.43658820510
4401	12/23/2015	Sandt DOT	Hatched	Asphalt	Flat	Yes	No	No	Yes	No	72	2	1	1	51	32	4401	-71.82038137240	43.43649860230
4402	12/23/2015	Sandt DOT	Hatched	Asphalt	Flat	Yes	No	No	Yes	No	72	2	1	1	51	32	4402	-71.82001214880	43.43649560600

4403	12/23/2015 Sandt DOT	Hatched	Asphalt	Flat	Yes	No	No	No	No	96	1	5	1	27	64	4403	-71.82011964700	43.43654776270
4404	12/23/2015 Sandt DOT	Hatched	Asphalt	Flat	Yes	No	No	No	Yes	72	1	5	1	50	33	4404	-71.60164138640	43.44238180020
4405	12/23/2015 Sandt DOT	Hatched	Asphalt	Flat	Yes	No	No	No	No	76	4	2	1	37	51	4405	-71.60153242840	43.44244157560
4406	12/23/2015 Sandt DOT	Hatched	Asphalt	Flat	Yes	No	No	No	Yes	72	2	5	1	50	33	4406	-71.59927017930	43.44209297970
4407	12/23/2015 Sandt DOT	Hatched	Asphalt	Flat	Yes	No	No	No	No	76	3	1	1	37	51	4407	-71.59793363910	43.44220761200
4408	12/23/2015 Sandt DOT	Parallel	Asphalt	Flat	Yes	No	No	Yes	No	72	3	2	1	63	15	4408	-71.59733005690	43.44219218650
4409	12/23/2015 Sandt DOT	Parallel	Asphalt	Flat	Yes	No	No	Yes	No	72	2	4	1	53	29	4409	-71.59915858100	43.44202041680
4410	12/24/2015 Sandt DOT	Parallel Filled	Asphalt	Flat	Yes	No	No	Yes	No	96	4	1	1	38	49	4410	-71.98354759540	43.41378160110
4411	12/24/2015 Sandt DOT	Parallel Filled	Asphalt	Flat	Yes	No	No	No	No	96	2	2	1	29	62	4411	-71.98261159400	43.41340719700
4412	12/24/2015 Sandt DOT	Parallel Filled	Asphalt	Flat	Yes	No	No	Yes	No	96	3	4	1	38	49	4412	-71.98204742230	43.41316533670
4413	12/24/2015 Sandt DOT	Parallel Filled	Asphalt	Flat	Yes	No	No	Yes	No	96	8	4	1	38	49	4413	-71.98074601790	43.41266673000
4414	12/24/2015 Sandt DOT	Parallel Filled	Asphalt	Flat	Yes	No	No	No	No	96	5	3	1	39	48	4414	-71.98099200660	43.41270719880
4415	12/28/2015 Sandt DOT	Parallel	Asphalt	Flat	Yes	No	No	Yes	Yes	84	2	5	1	26	66	4415	-71.49993733230	43.65828245520
4416	12/28/2015 Sandt DOT	Parallel	Asphalt	Flat	Yes	No	No	Yes	Yes	84	2	1	1	26	66	4416	-71.50005030410	43.65812004070
4417	12/28/2015 Sandt DOT	Parallel	Asphalt	Flat	Yes	No	No	Yes	Yes	84	1	3	1	26	66	4417	-71.49987847610	43.65809382660
4418	12/28/2015 Sandt DOT	Parallel	Asphalt	Flat	Yes	No	No	Yes	Yes	84	1	3	1	26	66	4418	-71.49976343710	43.65825474820
4419	12/28/2015 Sandt DOT	Hatched	Asphalt	Flat	Yes	No	No	Yes	No	72	1	3	1	51	32	4419	-71.49974788500	43.65811899290
4420	12/28/2015 Sandt DOT	Parallel Filled	Asphalt	Flat	Yes	No	No	No	Yes	68	1	7	1	62	16	4420	-71.50107612390	43.66421777070
4421	12/28/2015 Sandt DOT	Parallel Filled	Asphalt	Flat	Yes	No	No	No	Yes	68	2	6	1	62	16	4421	-71.50254062590	43.66636366260
4422	12/28/2015 NM SWRPC	Parallel	Asphalt	Flat	Yes	No	No	No	No	77	0	0	1	29	62	4422	-72.49946760360	42.78434421780
4423	12/28/2015 NM SWRPC	Parallel	Asphalt	Flat	Yes	No	No	No	No	78	0	0	1	29	62	4423	-72.49955445330	42.78401037640
4424	12/28/2015 NM SWRPC	Parallel	Asphalt	Flat	Yes	No	No	No	No	78	1	1	1	29	62	4424	-72.49997589470	42.78233636920
4425	12/28/2015 NM SWRPC	Parallel	Asphalt	Flat	Yes	No	No	Yes	No	78	1	1	1	28	63	4425	-72.50007882490	42.78199851100
4426	12/28/2015 NM SWRPC	Parallel Filled	Asphalt	Flat	Yes	No	No	Yes	No	95	1	2	1	28	63	4426	-72.49974924800	42.78197021220
4427	12/28/2015 NM SWRPC	Parallel Filled	Asphalt	Flat	Yes	No	No	Yes	No	79	0	0	1	28	63	4427	-72.49969775110	42.78163087880
4428	12/28/2015 NM SWRPC	Parallel Filled	Asphalt	Flat	Yes	No	No	Yes	No	85	1	1	1	28	63	4428	-72.49983608560	42.78148765960
4429	1/4/2016 Sandt DOT	Parallel	Asphalt	Flat	Yes	No	No	Yes	Yes	84	1	1	1	26	66	4429	-71.61971546570	43.44724609200
4430	1/4/2016 Sandt DOT	Parallel	Asphalt	Flat	Yes	Yes	No	Yes	Yes	84	1	1	1	25	67	4430	-71.61944720450	43.44733550270
4431	1/4/2016 Sandt DOT	Parallel	Asphalt	Flat	Yes	No	No	Yes	Yes	84	1	1	1	26	66	4431	-71.61945740010	43.44713333810
4432	1/4/2016 Nichols district 1	Hatched	Asphalt	Flat	Yes	No	No	Yes	Yes	84	2	2	1	24	68	4432	-72.03923848460	44.15352656630
4433	1/4/2016 Nichols district 1	Hatched	Asphalt	Flat	Yes	No	No	Yes	No	84	1	2	1	26	66	4433	-72.03802696710	44.15299104240
4434	1/4/2016 Nichols district 1	Parallel	Asphalt	Raised	Yes	No	No	Yes	No	80	0	2	1	28	63	4434	-72.03722525340	44.15257295860
4435	1/4/2016 Nichols district 1	Parallel	Asphalt	Raised	Yes	No	No	Yes	No	80	1	2	1	28	63	4435	-72.03718981070	44.15245090770
4436	1/4/2016 Nichols district 1	Parallel	Asphalt	Raised	Yes	No	No	Yes	No	80	3	2	1	38	49	4436	-72.03710564080	44.15248374790
4437	1/4/2016 Nichols district 1	Parallel	Asphalt	Raised	Yes	No	No	Yes	No	80	2	2	1	28	63	4437	-72.03714379080	44.15260407740
4438	1/4/2016 Nichols district 1	Parallel	Asphalt	Raised	Yes	No	No	Yes	No	80	1	1	1	28	63	4438	-72.03613579690	44.15148927990
4439	1/4/2016 Nichols district 1	Parallel	Asphalt	Raised	Yes	No	No	Yes	No	80	1	1	1	28	63	4439	-72.03541781120	44.15032762920
4440	1/4/2016 Nichols district 1	Hatched	Asphalt	Raised	Yes	No	No	Yes	No	84	0	1	1	26	66	4440	-72.03454047210	44.14895918970
4441	1/4/2016 Nichols district 1	Hatched	Asphalt	Raised	Yes	No	No	No	No	88	1	2	1	27	64	4441	-72.03232940070	44.14504075120
4442	1/4/2016 Sandt DOT	Parallel	Asphalt	Flat	Yes	Yes	No	No	Yes	70	2	3	1	51	32	4442	-71.48815944680	43.51664087710
4443	1/5/2016 Sandt DOT	Hatched	Asphalt	Flat	Yes	No	No	Yes	Yes	72	4	3	1	59	21	4443	-71.46905813390	43.44411926100
4444	1/5/2016 Sandt DOT	Parallel Filled	Asphalt	Flat	Yes	No	No	Yes	Yes	72	2	4	1	51	32	4444	-71.47969267340	43.44482700800
4445	1/5/2016 Sandt DOT	Parallel	Asphalt	Flat	Yes	No	No	Yes	Yes	80	5	11	1	46	38	4445	-71.47536171360	43.44483498140
4446	1/5/2016 Sandt DOT	Parallel	Asphalt	Flat	Yes	No	No	Yes	Yes	80	5	5	1	36	52	4446	-71.47543219410	43.44496862050
4447	1/5/2016 Sandt DOT	Parallel	Asphalt	Flat	Yes	No	No	Yes	No	77	3	1	1	38	49	4447	-71.48040196330	43.44428781590
4448	1/5/2016 Sandt DOT	Parallel	Asphalt	Flat	Yes	No	No	Yes	No	77	4	1	1	38	49	4448	-71.48097098440	43.44392026610
4449	1/6/2016 Nichols district 1	Hatched	Asphalt	Raised	No	No	No	Yes	No	78	1	4	1	6	93	4449	-72.03734851420	44.15166166930
4450	1/6/2016 Melendy dist1	Hatched	Asphalt	Raised	No	No	No	Yes	No	132	2	2	1	6	93	4450	-71.68667859150	44.03123829980
4451	1/6/2016 Melendy dist1	Hatched	Asphalt	Raised	No	No	No	Yes	No	132	3	5	1	16	79	4451	-71.68659061490	44.03224059330
4452	1/6/2016 Melendy dist1	Hatched	Asphalt	Raised	No	No	No	Yes	No	132	2	2	1	6	93	4452	-71.68581611770	44.02943456180
4453	1/7/2016 Sandt DOT	Parallel	Asphalt	Flat	Yes	No	No	Yes	Yes	74	5	5	1	36	52	4453	-71.56748254830	43.45492589900
4454	1/7/2016 Sandt DOT	Parallel	Asphalt	Flat	Yes	Yes	No	Yes	Yes	74	4	4	1	35	53	4454	-71.57368496340	43.45157209870
4455	1/7/2016 Nichols district 1	Parallel	Asphalt	Flat	No	No	No	Yes	No	74	2	1	1	8	90	4455	-72.02523798830	44.13975650400
4456	1/7/2016 Nichols district 1	Parallel	Asphalt	Raised	No	No	No	Yes	Yes	98	3	1	1	16	79	4456	-72.02471211420	44.14139827180
4457	1/7/2016 Nichols district 1	Hatched	Asphalt	Raised	No	No	No	No	Yes	105	3	1	1	15	81	4457	-72.02430449700	44.14306203910
4458	1/7/2016 Nichols district 1	Parallel	Asphalt	Raised	No	No	No	No	Yes	102	1	1	1	7	92	4458	-72.02416143760	44.14320023920
4459	1/7/2016 Nichols district 1	Parallel	Asphalt	Raised	No	No	No	Yes	Yes	102	3	1	1	16	79	4459	-72.02590851390	44.14341483350
4460	1/7/2016 Nichols district 1	Parallel	Asphalt	Raised	No	No	No	Yes	Yes	102	1	3	1	6	93	4460	-72.02578422020	44.14344286820
4461	1/7/2016 Wilkinson District 1	Hatched	Asphalt	Raised	No	No	No	Yes	No	132	1	4	1	6	93	4461	-71.68649538820	44.03029427610
4462	1/7/2016 Wilkinson District 1	Parallel	Asphalt	Raised	No	No	No	Yes	No	80	1	3	1	8	90	4462	-71.68096122150	44.03233033180
4463	1/7/2016 Wilkinson District 1	Parallel	Asphalt	Raised	No	No	No	Yes	No	80	1	3	1	8	90	4463	-71.68096122150	44.03233033180
4464	1/7/2016 Wilkinson District 1	Parallel	Asphalt	Raised	No	No	No	Yes	No	80	2	2	1	8	90	4464	-71.68080285840	44.03249172270
4465	1/7/2016 Sandt DOT	Parallel Filled	Asphalt	Flat	Yes	No	No	Yes	No	96	1	2	1	28	63	4465	-71.99086429670	43.41888885530
4466	1/7/2016 Sandt DOT	Parallel Filled	Asphalt	Flat	Yes	Yes	No	Yes	Yes	96	4	2	1	35	53	4466	-71.99214400250	43.42100327120
4467	1/7/2016 Sandt DOT	Parallel Filled	Asphalt	Flat	Yes	Yes	No	Yes	Yes	96	2	7	1	35	53	4467	-71.99222811520	43.42093586010
4468	1/8/2016 Sandt DOT	Parallel Filled	Asphalt	Flat	Yes	No	No	No	Yes	90	0	6	1	37	51	4468	-72.00234635370	43.42371320620
4469	1/8/2016 Sandt DOT	Parallel Filled	Asphalt	Flat	Yes	Yes	No	No	Yes	90	2	2	1	26	66	4469	-72.00031392510	43.42293556040
4470	1/8/2016 Sandt DOT	Parallel Filled	Asphalt	Flat	Yes	Yes	No	Yes	Yes	90	1	5	1	25	67	4470	-71.99987024600	43.42302545970
4471	1/8/2016 Sandt DOT	Parallel Filled	Asphalt	Flat	Yes	Yes	No	Yes	Yes	90	1	5	1	25	67	4471	-71.99987024600	43.42302545970
4472	1/8/2016 Sandt DOT	Parallel Filled	Asphalt	Flat	Yes	Yes	No	No	Yes	90	1	3	1	26	66	4472	-71.99976051970	43.42274677900
4473	1/8/2016 Sandt DOT	Parallel Filled	Asphalt	Flat	Yes	Yes	No	No	Yes	90	3	1	1	36	52	4473	-72.00018364700	43.42263162850
4474	1/8/2016 Sandt DOT	Parallel	Asphalt	Flat	Yes	No	No	No	No	80	7	7	1	49	34	4474	-71.99441808440	43.42136301590
4475	1/11/2016 Sandt DOT	Parallel Filled	Asphalt	Flat	Yes	No	No	Yes	Yes	84	1	6	1	36	52	4475	-71.49807091770	43.65558820260
4476	1/11/2016 Sandt DOT	Parallel Filled	Asphalt	Flat	Yes	No	No	No	Yes	84	1	6	1	37	51	4476	-71.49881157700	43.65659231030
4477	1/11/2016 Sandt DOT	Hatched	Asphalt	Raised	Yes	Yes	No	No	Yes	70	1	3	1	49	34	4477	-71.45427264190	43.60327566120
4478	1/11/2016 Sandt DOT	Hatched	Asphalt	Raised	Yes	Yes	No	No	Yes	70	2	1	1	49	34	4478	-71.45481440030	43.60349568590
4479	1/11/2016 Sandt DOT	Hatched	Asphalt	Raised	Yes	Yes	No	No	Yes	70	2	1	1	49	34	4479	-71.45464630200	43.60308106190
4480	1/11/2016 Wilkinson District 1	Parallel	Asphalt	Raised	No	No	No	Yes	Yes	68	1	3	1	31	59	4480	-71.67720531960	44.03638264120
4481	1/11/2016 Wilkinson District 1	Parallel	Asphalt	Raised	No	No	No	Yes	Yes	72	2	2	1	31	59	4481	-71.67711084450	44.03649263630
4482	1/13/2016 Nichols district 1	Parallel	Asphalt	Raised	Yes	No	No	No	No	102	2	1	1	29	62	4482	-72.02432433410	44.14332395650
4483	1/14/2016 Nichols district 1	Parallel	Asphalt	Flat	Yes	No	No	Yes	No	56	1	1	1	53	29	4483	-72.02540616910	44.09527079870
4484	1/14/2016 Wilkinson District 1	Parallel	Asphalt	Raised	No	No	No	Yes	Yes	90	1	2	1	6	93	4484	-71.67257708500	44.04084476100
4485	1/14/2016 Wilkinson District 1	Parallel Filled	Asphalt	Raised	No	No	No	Yes	No	130	1	1	1	8	90	4485	-71.67047440440	44.04263276690
4486	1/14/2016 Wilkinson District 1	Parallel Filled	Asphalt	Raised	No	No	No	Yes	No	130	1	1	1	8	90	4486	-71.66947436300	44.04353631290
4487	1/14/2016 Wilkinson District 1	Parallel Filled	Asphalt	Raised	No	No	No	Yes	No	120	2	4	1	8	90	4487	-71.66848675200	44.04442581050
4488	1/14/2016 Wilkinson District 1	Parallel Filled	Asphalt	Raised	Yes	No	No	Yes	No	125	2	2	1	28	63	4488	-71.66830383830	44.04448222800
4489	1/14/2016 Wilkinson District 1	Parallel Filled	Asphalt	Raised	Yes	No	No	Yes	No	125	2	2	1	28	63	4489	-71.67132431980	44.04179947870
4490	1/14/2016 Wilkinson District 1	Parallel Filled	Asphalt	Raised	Yes	No	No	Yes	No	125	1	1	1	28	63	4490	-71.67516583000	44.03845286880
4491	1/14/2016 Wilkinson District 1	Parallel Filled	Asphalt	Raised	Yes	No	No	Yes	No	125	1	1	1	28	63	4491	-71.67465725920	44.03889287060

4492	1/14/2016 Wilkinson District 1	Parallel Filled	Asphalt	Raised	Yes	No	No	Yes	Yes	96	2	2	1	26	66	4492	-71.67258938880	44.04072378000
4493	1/14/2016 Wilkinson District 1	Parallel Filled	Asphalt	Raised	Yes	No	No	Yes	Yes	90	2	4	1	26	66	4493	-71.67241042450	44.04087988490
4494	1/14/2016 Wilkinson District 1	Parallel Filled	Asphalt	Raised	Yes	No	No	Yes	No	125	1	3	1	28	63	4494	-71.66997098380	44.04297435960
4495	1/14/2016 Wilkinson District 1	Parallel Filled	Asphalt	Raised	Yes	No	No	Yes	No	125	2	4	1	28	63	4495	-71.66943887760	44.04345056360
4496	1/14/2016 Wilkinson District 1	Parallel Filled	Asphalt	Raised	Yes	No	No	Yes	No	125	1	1	1	28	63	4496	-71.66779349440	44.04502505280
4497	1/25/2016 Wilkinson District 1	Hatched	Asphalt	Raised	Yes	No	No	Yes	No	69	1	1	1	51	32	4497	-71.05864263730	43.99504978120
4498	1/25/2016 Wilkinson District 1	Hatched	Asphalt	Raised	Yes	No	No	Yes	No	72	1	1	1	51	32	4498	-71.05904307980	43.99510277110
4499	1/26/2016 Nichols district 1	Parallel	Asphalt	Raised	Yes	No	No	No	No	86	1	5	1	29	62	4499	-71.18063790190	44.14611468150
4500	1/26/2016 Wilkinson District 1	Hatched	Asphalt	Flat	Yes	No	No	Yes	Yes	72	2	4	1	49	34	4500	-71.11579877570	44.01983446190
4501	1/26/2016 Wilkinson District 1	Hatched	Asphalt	Flat	Yes	No	No	Yes	Yes	72	2	1	1	49	34	4501	-71.11697172790	44.02283030710
4502	1/26/2016 Wilkinson District 1	Hatched	Asphalt	Flat	Yes	No	No	No	No	72	2	2	1	52	30	4502	-71.11732722010	44.02369818040
4503	1/26/2016 Wilkinson District 1	Hatched	Asphalt	Flat	No	No	No	Yes	Yes	72	2	1	1	29	62	4503	-71.11840888890	44.02640137950
4504	1/27/2016 Wilkinson District 1	Hatched	Asphalt	Raised	No	No	No	Yes	No	72	1	1	1	31	59	4504	-71.11909038650	44.02797146800
4505	1/27/2016 Wilkinson District 1	Hatched	Asphalt	Raised	No	No	No	Yes	No	72	3	1	1	41	45	4505	-71.12063738270	44.03193919630
4506	1/26/2016 Nichols district 1	Hatched	Asphalt	Raised	No	No	No	No	Yes	72	1	1	1	30	60	4506	-71.11528236160	44.01977381820
4507	1/27/2016 Nichols district 1	Hatched	Asphalt	Flat	Yes	No	No	No	Yes	74	2	1	1	25	67	4507	-71.11538601250	44.01990456830
4508	1/27/2016 Nichols district 1	Hatched	Asphalt	Raised	No	No	No	No	Yes	72	1	1	1	30	60	4508	-71.11536409850	44.02002845740
4509	1/27/2016 Nichols district 1	Hatched	Asphalt	Raised	Yes	No	No	No	Yes	72	3	1	1	60	19	4509	-71.11655285160	44.02267730720
4510	1/27/2016 Nichols district 1	Hatched	Asphalt	Raised	Yes	No	No	No	Yes	72	1	1	1	50	33	4510	-71.11664231010	44.02287000650
4511	1/27/2016 Nichols district 1	Hatched	Asphalt	Raised	Yes	No	No	No	Yes	72	1	1	1	50	33	4511	-71.11662256350	44.02300745140
4512	1/27/2016 Nichols district 1	Hatched	Asphalt	Raised	Yes	No	No	No	Yes	72	1	1	1	50	33	4512	-71.11817734650	44.02641903940
4513	1/27/2016 Nichols district 1	Hatched	Asphalt	Raised	Yes	No	No	No	No	72	0	0	1	52	30	4513	-71.12164340090	44.03550208750
4514	1/27/2016 Nichols district 1	Hatched	Asphalt	Raised	Yes	No	No	No	No	72	4	1	1	62	16	4514	-71.12261056880	44.03827987780
4515	1/27/2016 Nichols district 1	Hatched	Asphalt	Raised	Yes	No	No	No	No	72	4	2	1	62	16	4515	-71.12288764770	44.03909606680
4516	1/28/2016 Nichols district 1	Parallel	Asphalt	Raised	Yes	No	No	No	No	84	2	5	1	29	62	4516	-71.74789640170	44.22730295070
4517	1/28/2016 Nichols district 1	Parallel	Asphalt	Raised	Yes	No	No	Yes	No	84	1	4	1	28	63	4517	-71.74766102580	44.22720390260
4518	1/28/2016 Wilkinson District 1	Parallel Filled	Asphalt	Raised	Yes	No	No	Yes	No	84	4	1	1	38	49	4518	-71.74775026580	44.22730727590
4519	1/28/2016 Wilkinson District 1	Parallel Filled	Asphalt	Raised	Yes	No	No	Yes	No	84	1	3	1	28	63	4519	-71.74792922630	44.22743052860
4520	1/28/2016 Wilkinson District 1	Parallel Filled	Asphalt	Raised	Yes	No	No	Yes	No	90	2	3	1	28	63	4520	-71.75274930660	44.22921083200
4521	1/28/2016 Wilkinson District 1	Parallel Filled	Asphalt	Raised	Yes	No	No	Yes	No	84	2	4	1	28	63	4521	-71.75545459600	44.23133971590
4522	1/28/2016 Wilkinson District 1	Parallel Filled	Asphalt	Raised	Yes	No	No	Yes	No	80	1	1	1	28	63	4522	-71.74866213260	44.22524958830
4523	1/28/2016 Wilkinson District 1	Parallel Filled	Asphalt	Raised	Yes	No	No	Yes	No	84	2	2	1	28	63	4523	-71.74812582440	44.22619538580
4524	1/29/2016 Sandt DOT	Hatched	Asphalt	Flat	Yes	No	No	No	Yes	104	1	1	1	25	67	4524	-71.53480351010	43.21200655140
4525	2/1/2016 Wilkinson District 1	Parallel	Asphalt	Raised	No	No	No	Yes	No	84	3	1	1	18	77	4525	-71.74782265900	44.22720045350
4526	2/1/2016 Wilkinson District 1	Hatched	Asphalt	Raised	No	Yes	No	Yes	Yes	78	2	2	1	3	97	4526	-71.11467355200	44.01761910550
4527	2/1/2016 Wilkinson District 1	Hatched	Asphalt	Raised	No	No	No	Yes	Yes	72	1	1	1	29	62	4527	-71.11478660960	44.01741146250
4528	2/1/2016 Wilkinson District 1	Hatched	Asphalt	Raised	No	No	No	Yes	Yes	72	1	4	1	29	62	4528	-71.11561524400	44.01995727740
4529	2/1/2016 Wilkinson District 1	Hatched	Asphalt	Raised	Yes	No	No	Yes	Yes	72	1	4	1	49	34	4529	-71.11675536570	44.02274432700
4530	2/1/2016 Nichols district 1	Hatched	Asphalt	Raised	Yes	No	No	No	No	72	8	3	1	62	16	4530	-71.12439907480	44.04281618720
4531	2/1/2016 Nichols district 1	Hatched	Asphalt	Raised	Yes	No	No	Yes	No	72	2	1	1	51	32	4531	-71.12463826590	44.04416848650
4532	2/1/2016 Nichols district 1	Parallel	Stamped Asphalt	Raised	Yes	No	No	Yes	No	66	6	1	1	67	10	4532	-71.12422208200	44.04700002890
4533	2/1/2016 Nichols district 1	Parallel	Stamped Asphalt	Raised	Yes	No	No	Yes	No	66	3	1	1	67	10	4533	-71.12570798720	44.05033451780
4534	2/1/2016 Nichols district 1	Parallel	Stamped Asphalt	Raised	Yes	No	No	Yes	No	86	2	1	1	32	58	4534	-71.12694640040	44.05193352770
4535	2/2/2016 Wilkinson District 1	Hatched	Asphalt	Raised	Yes	No	No	Yes	Yes	72	1	3	1	49	34	4535	-71.11831792330	44.02647597590
4536	2/2/2016 Wilkinson District 1	Hatched	Asphalt	Raised	Yes	No	No	Yes	No	72	5	3	1	61	18	4536	-71.12446474430	44.04213696760
4537	2/2/2016 Wilkinson District 1	Hatched	Asphalt	Raised	Yes	No	No	Yes	No	72	1	3	1	51	32	4537	-71.12471959880	44.04428844490
4538	2/2/2016 Wilkinson District 1	Parallel Filled	Asphalt	Raised	Yes	No	No	Yes	No	65	1	3	1	53	29	4538	-71.12515743780	44.04949018730
4539	2/2/2016 Wilkinson District 1	Parallel Filled	Asphalt	Raised	Yes	No	No	Yes	No	65	2	3	1	53	29	4539	-71.12469732850	44.04850755800
4540	2/2/2016 Wilkinson District 1	Parallel Filled	Asphalt	Raised	Yes	No	No	Yes	No	80	1	3	1	28	63	4540	-71.12429906570	44.04715504300
4541	2/2/2016 Nichols district 1	Parallel	Stamped Asphalt	Raised	Yes	No	No	Yes	Yes	90	2	1	1	30	60	4541	-71.12786651850	44.05308901610
4542	2/4/2016 Nichols district 1	Parallel	Stamped Asphalt	Raised	Yes	No	No	Yes	Yes	84	1	1	1	30	60	4542	-71.12831787210	44.05366586610
4543	2/8/2016 Wilkinson District 1	Parallel Filled	Asphalt	Raised	Yes	No	No	Yes	No	80	1	6	1	38	49	4543	-71.12580978240	44.05033138300
4544	2/8/2016 Wilkinson District 1	Parallel Filled	Asphalt	Raised	Yes	No	No	Yes	No	66	1	1	1	53	29	4544	-71.12680460800	44.05149316540
4545	2/8/2016 Wilkinson District 1	Parallel Filled	Asphalt	Raised	Yes	No	No	Yes	No	80	1	4	1	28	63	4545	-71.12684111530	44.05166980130
4546	2/9/2016 Wilkinson District 1	Parallel Filled	Asphalt	Raised	Yes	No	No	Yes	No	77	1	2	1	28	63	4546	-71.12778120420	44.05273714270
4547	2/9/2016 Wilkinson District 1	Parallel Filled	Asphalt	Raised	Yes	No	No	Yes	No	90	1	3	1	28	63	4547	-71.12793455870	44.05305046770
5546	2/10/2016 Wilkinson District 1	Parallel Filled	Asphalt	Raised	Yes	No	No	Yes	No	80	1	4	1	28	63	5546	-71.12941299370	44.05498536820
5547	2/10/2016 Wilkinson District 1	Parallel Filled	Asphalt	Raised	Yes	No	No	Yes	No	92	1	2	1	28	63	5547	-71.12881321880	44.05419343020
5548	2/10/2016 Wilkinson District 1	Parallel Filled	Asphalt	Raised	Yes	No	No	Yes	No	82	1	4	1	28	63	5548	-71.12836989870	44.05362115160
5549	2/10/2016 Nichols district 1	Hatched	Asphalt	Flat	Yes	No	No	Yes	No	74	1	1	1	26	66	5549	-71.12627422550	43.97864233050
5550	2/10/2016 Nichols district 1	Parallel	Asphalt	Raised	No	No	No	Yes	Yes	80	2	2	1	6	93	5550	-71.13352576230	43.97827270160
5551	2/11/2016 Nichols district 1	Hatched	Asphalt	Raised	Yes	No	No	Yes	Yes	74	1	2	1	24	68	5551	-71.12616764900	43.97869768500
5552	2/11/2016 Nichols district 1	Hatched	Asphalt	Raised	Yes	No	No	No	Yes	74	1	3	1	25	67	5552	-71.12511945830	43.97868894590
5553	2/11/2016 Nichols district 1	Hatched	Asphalt	Raised	Yes	No	No	No	Yes	74	1	4	1	25	67	5553	-71.12433760280	43.97866231000
5554	2/11/2016 Nichols district 1	Hatched	Asphalt	Raised	Yes	No	No	No	Yes	74	1	3	1	25	67	5554	-71.12316019490	43.97864001830
5555	2/11/2016 Nichols district 1	Hatched	Asphalt	Raised	Yes	No	No	No	No	74	1	3	1	27	64	5555	-71.12109567200	43.97861844500
5556	2/11/2016 Nichols district 1	Hatched	Asphalt	Raised	Yes	No	No	Yes	No	74	1	3	1	26	66	5556	-71.12033160930	43.97864217880
5557	2/18/2016 Nichols district 1	Hatched	Asphalt	Raised	Yes	No	No	Yes	Yes	70	1	4	1	49	34	5557	-71.11843257280	43.97877210590
5558	2/18/2016 Nichols district 1	Hatched	Asphalt	Raised	Yes	No	No	Yes	Yes	70	2	1	1	49	34	5558	-71.11849378040	43.97883290860
5559	2/18/2016 Nichols district 1	Hatched	Asphalt	Raised	Yes	No	No	Yes	Yes	70	5	2	1	59	21	5559	-71.11854130660	43.97876675090
5561	2/18/2016 Wilkinson District 1	Hatched	Asphalt	Flat	Yes	No	No	Yes	Yes	60	2	3	1	49	34	5561	-71.11845991380	43.97870975660
5562	2/22/2016 Sandt DOT	Parallel	Asphalt	Flat	Yes	Yes	No	Yes	Yes	76	1	2	1	25	67	5562	-71.49895281950	43.64040482540
5563	2/22/2016 Sandt DOT	Parallel	Asphalt	Flat	Yes	Yes	No	Yes	Yes	76	5	1	1	35	53	5563	-71.49942774550	43.64050720790
5564	2/22/2016 Sandt DOT	Parallel	Asphalt	Flat	Yes	Yes	No	Yes	Yes	76	0	1	1	25	67	5564	-71.49959132550	43.64012280290
5565	2/22/2016 Sandt DOT	Parallel	Asphalt	Flat	Yes	Yes	No	Yes	Yes	76	3	1	1	35	53	5565	-71.49905726740	43.64006279380
5566	2/22/2016 Sandt DOT	Parallel	Asphalt	Flat	No	No	No	No	No	84	1	8	1	19	75	5566	-71.47365318320	43.61046439350
5567	2/11/2016 Nichols district 1	Hatched	Asphalt	Raised	Yes	No	No	No	No	74	1	3	1	27	64	5567	-71.11580415830	43.97892196500
5568	2/29/2016 Sandt DOT	Parallel	Asphalt	Flat	Yes	No	No	No	No	96	2	2	1	29	62	5568	-70.86912485670	42.88512888390
5569	2/29/2016 Sandt DOT	Parallel	Asphalt	Flat	Yes	No	No	No	No	96	2	2	1	29	62	5569	-70.86918785350	42.88522135150
5570	2/29/2016 Sandt DOT	Parallel	Asphalt	Flat	Yes	No	No	No	Yes	96	1	2	1	27	64	5570	-70.87025526940	42.88682476530
5571	2/29/2016 Sandt DOT	Parallel	Asphalt	Flat	Yes	No	No	No	Yes	96	1	4	1	27	64	5571	-70.87061983050	42.88687665780
5572	2/29/2016 Sandt DOT	Parallel	Asphalt	Flat	Yes	No	No	No	Yes	96	1	2	1	27	64	5572	-70.87066275190	42.88665618860
5573	2/29/2016 Sandt DOT	Parallel	Asphalt	Flat	Yes	No	No	No	Yes	96	1	4	1	27	64	5573	-70.87035252230	42.88659752890
5574	2/29/2016 Sandt DOT	Parallel	Asphalt	Flat	Yes	No	No	No	No	96	2	2	1	29	62	5574	-70.87100284120	42.88770116080
5575	2/29/2016 Sandt DOT	Parallel	Asphalt	Flat	Yes	No	No	No	No	96	2	2	1	29	62	5575	-70.87093923270	42.88760121030
5576	2/29/2016 Sandt DOT	Parallel	Asphalt	Flat	Yes	No	No	No	Yes	66	3	0	1	62	16	5576	-70.87136208440	42.88876729330
5577	2/29/2016 Sandt DOT	Parallel	Asphalt	Flat	Yes	No	No	No	No	96	5	1	1	39	48	5577	-70.87200188570	42.89122401000
5578	2/29/2016 Sandt DOT	Parallel	Asphalt	Flat	Yes	No	No	No	No	96	6	1	1	39	48	5578	-70.87218705150	42.89170222780
5579	2/29/2016 Sandt DOT	Parallel	Asphalt	Flat	Yes	Yes	No	No	No	96	1	1	1	28	63	5579	-70.87247699960	42.89234224040

5580	2/29/2016 Sandt DOT	Parallel	Asphalt	Flat	Yes	Yes	No	Yes	Yes	62	2	1	1	50	33	5580	-70.87235372460	42.89349688900
5581	2/29/2016 Sandt DOT	Parallel	Asphalt	Flat	Yes	No	No	Yes	Yes	62	2	5	1	51	32	5581	-70.87253610570	42.89374501720
5582	2/29/2016 Sandt DOT	Parallel	Asphalt	Flat	Yes	Yes	No	Yes	Yes	62	3	1	1	60	19	5582	-70.87285738450	42.89360795150
5583	2/29/2016 Sandt DOT	Hatched	Asphalt	Flat	Yes	Yes	No	Yes	No	96	3	2	1	35	53	5583	-70.87298985000	42.89343577660
5584	2/29/2016 Sandt DOT	Parallel	Asphalt	Flat	Yes	No	No	No	Yes	105	0	5	1	27	64	5584	-70.87247600150	42.89186502090
5585	3/10/2016 Sandt DOT	Parallel Filled	Asphalt	Flat	Yes	No	No	Yes	Yes	72	1	1	1	51	32	5585	-71.23685867110	43.47246413310
5586	3/15/2016 Sandt DOT	Parallel Filled	Asphalt	Flat	Yes	No	No	Yes	No	72	2	1	1	53	29	5586	-71.24244864590	42.77720718400
5587	3/15/2016 Sandt DOT	Parallel Filled	Concrete	Flat	Yes	No	No	Yes	No	72	2	2	1	55	26	5587	-71.24229630500	42.77759287720
5588	3/15/2016 Sandt DOT	Parallel Filled	Asphalt	Flat	Yes	No	No	Yes	No	72	1	6	1	63	15	5588	-71.24201525950	42.77768476390
5589	3/15/2016 Sandt DOT	Parallel Filled	Asphalt	Flat	Yes	No	No	Yes	No	72	4	2	1	63	15	5589	-71.24199509020	42.77774491640
5590	3/15/2016 Sandt DOT	Parallel	Asphalt	Flat	Yes	No	No	Yes	No	72	2	2	1	53	29	5590	-71.24280364520	42.77866161640
5591	3/16/2016 Sandt DOT	Parallel	Asphalt	Flat	Yes	No	No	Yes	Yes	80	3	1	1	36	52	5591	-71.10518106010	42.84731357560
5592	3/16/2016 Sandt DOT	Parallel	Asphalt	Flat	Yes	No	No	Yes	Yes	80	3	1	1	36	52	5592	-71.10518106010	42.84731357560
5593	3/16/2016 Sandt DOT	Parallel	Asphalt	Flat	Yes	No	No	Yes	Yes	80	3	1	1	36	52	5593	-71.10540302420	42.84730455280
5594	3/16/2016 Sandt DOT	Parallel	Asphalt	Flat	Yes	No	No	Yes	Yes	80	1	3	1	26	66	5594	-71.10545639240	42.84769500290
5595	3/16/2016 Sandt DOT	Parallel	Asphalt	Flat	Yes	No	No	Yes	Yes	80	2	1	1	26	66	5595	-71.10523468980	42.84766756440
5596	3/16/2016 Sandt DOT	Parallel	Asphalt	Flat	Yes	No	No	Yes	No	80	4	2	1	38	49	5596	-71.10649057700	42.84478551720
5597	3/16/2016 Sandt DOT	Parallel	Asphalt	Flat	Yes	No	No	Yes	Yes	80	2	6	1	36	52	5597	-71.10715884860	42.84358669500
5598	3/16/2016 Sandt DOT	Parallel	Asphalt	Flat	Yes	No	No	Yes	Yes	80	2	1	1	26	66	5598	-71.10747439810	42.84375907610
5599	3/16/2016 Sandt DOT	Parallel	Asphalt	Flat	Yes	No	No	Yes	Yes	80	1	6	1	36	52	5599	-71.10723045140	42.84383064400
5600	3/16/2016 Sandt DOT	Parallel	Asphalt	Flat	Yes	No	No	Yes	No	80	4	1	1	38	49	5600	-71.10676441110	42.84501376330
5601	3/16/2016 Sandt DOT	Parallel	Asphalt	Flat	Yes	Yes	No	Yes	Yes	72	4	2	1	60	19	5601	-71.10780680200	42.83129009850
5602	3/16/2016 Sandt DOT	Parallel	Asphalt	Flat	Yes	No	No	Yes	Yes	72	5	1	1	61	18	5602	-71.10764249680	42.83138378320
5603	3/16/2016 Sandt DOT	Parallel	Asphalt	Flat	Yes	No	No	No	No	80	3	3	1	39	48	5603	-71.10765381250	42.83176752720
5604	3/17/2016 Wilkinson District 1	Parallel Filled	Asphalt	Raised	Yes	No	No	No	No	108	1	3	1	29	62	5604	-71.67588507040	44.03769947580
5605	3/17/2016 Wilkinson District 1	Parallel Filled	Asphalt	Raised	Yes	No	No	Yes	Yes	128	4	2	1	36	52	5605	-71.67241874270	44.04077534330
5607	3/18/2016 Sandt DOT	Parallel	Asphalt	Flat	Yes	No	No	Yes	Yes	52	5	3	1	61	18	5607	-71.10676152210	42.82739887820
5608	3/18/2016 Sandt DOT	Parallel	Asphalt	Flat	Yes	No	No	Yes	Yes	72	6	1	1	61	18	5608	-71.10694207820	42.82742875790
5609	3/18/2016 Sandt DOT	Parallel	Asphalt	Flat	Yes	No	No	No	No	96	4	2	1	39	48	5609	-71.10644720660	42.82692154700
5610	3/18/2016 Sandt DOT	Parallel	Asphalt	Flat	Yes	No	No	No	No	96	5	1	1	39	48	5610	-71.10629760010	42.82675159530
5611	3/18/2016 Sandt DOT	Parallel	Asphalt	Flat	Yes	Yes	No	Yes	No	60	2	2	1	52	30	5611	-71.10405239260	42.82209069880
5612	3/18/2016 Sandt DOT	Parallel	Asphalt	Flat	Yes	Yes	No	Yes	Yes	64	1	1	1	50	33	5612	-71.10415013880	42.82221508220
5613	3/18/2016 Sandt DOT	Parallel	Asphalt	Flat	Yes	Yes	No	Yes	Yes	60	1	5	1	50	33	5613	-71.10430765690	42.82206663320
5614	3/18/2016 Sandt DOT	Parallel	Asphalt	Flat	Yes	Yes	No	Yes	Yes	67	1	1	1	50	33	5614	-71.10453768720	42.82215474910
5615	3/18/2016 Sandt DOT	Parallel	Asphalt	Flat	Yes	Yes	No	Yes	Yes	60	1	1	1	50	33	5615	-71.10455176520	42.82228744190
5616	3/18/2016 Sandt DOT	Parallel	Asphalt	Flat	Yes	No	No	No	Yes	72	2	1	1	52	30	5616	-71.10558214830	42.82539092290
5617	3/18/2016 Sandt DOT	Parallel	Asphalt	Flat	Yes	Yes	No	Yes	Yes	72	11	2	1	60	19	5617	-71.10586143740	42.82553534330
5618	3/18/2016 Sandt DOT	Parallel	Asphalt	Flat	Yes	Yes	No	No	No	72	8	2	1	63	15	5618	-71.10390618740	42.82101828000
5619	3/18/2016 Sandt DOT	Parallel	Asphalt	None	Yes	No	No	No	Yes	0	0	0	1	52	30	5619	-71.10304696840	42.81702335700
5620	3/18/2016 Sandt DOT	Parallel Filled	Asphalt	Flat	Yes	No	No	No	No	60	1	4	1	54	27	5620	-71.10271444550	42.81578403020
5621	3/18/2016 Sandt DOT	Hatched	Asphalt	Flat	Yes	No	No	Yes	Yes	60	5	2	1	59	21	5621	-71.10269329730	42.81521805740
6618	3/23/2016 Sandt DOT	Hatched	Asphalt	Flat	Yes	Yes	No	No	Yes	80	2	2	1	24	68	6618	-71.10325967420	42.81718316920
6619	3/23/2016 Sandt DOT	Hatched	Asphalt	Flat	Yes	Yes	No	No	Yes	80	2	3	1	24	68	6619	-71.10341847810	42.81711591840
6620	3/23/2016 Sandt DOT	Hatched	Asphalt	Flat	Yes	Yes	No	No	Yes	80	3	1	1	34	55	6620	-71.10319333170	42.81687204670
6621	3/23/2016 Sandt DOT	Hatched	Asphalt	Flat	Yes	No	No	No	No	62	3	1	1	62	16	6621	-71.10323147390	42.81627474380
6622	3/23/2016 Sandt DOT	Hatched	Asphalt	Flat	Yes	No	No	No	No	62	3	1	1	62	16	6622	-71.10311117700	42.81574070000
6623	3/23/2016 Sandt DOT	Hatched	Asphalt	Flat	Yes	No	No	No	Yes	72	3	1	1	60	19	6623	-71.10300273430	42.81520813400
6624	3/23/2016 Sandt DOT	Hatched	Asphalt	None	Yes	No	No	No	Yes	0	2	4	1	50	33	6624	-71.10280093380	42.81509318940
6625	3/28/2016 Sandt DOT	Hatched	Asphalt	Flat	Yes	No	No	Yes	No	112	1	6	1	36	52	6625	-70.80424102960	43.06005660210
6626	3/30/2016 Sandt DOT	Parallel Filled	Asphalt	Flat	Yes	No	No	Yes	Yes	96	1	6	1	36	52	6626	-71.09402935170	42.83726671560
6627	3/30/2016 Sandt DOT	Parallel Filled	Asphalt	Flat	Yes	No	No	Yes	Yes	96	1	7	1	36	52	6627	-71.09500780730	42.83674551870
6628	3/30/2016 Sandt DOT	Parallel Filled	Asphalt	Flat	Yes	No	No	Yes	No	96	2	2	1	28	63	6628	-71.09538082630	42.83774016240
6629	3/30/2016 Sandt DOT	Parallel Filled	Asphalt	Flat	Yes	No	No	Yes	No	96	0	2	1	28	63	6629	-71.09542906940	42.83763975570
6630	3/30/2016 Sandt DOT	Parallel Filled	Asphalt	Flat	Yes	No	No	Yes	Yes	96	3	7	1	46	38	6630	-71.09495069430	42.83547934140
6631	3/30/2016 Sandt DOT	Parallel Filled	Asphalt	Flat	Yes	No	No	No	Yes	96	1	2	1	27	64	6631	-71.09455224420	42.83151493730
6632	3/30/2016 Sandt DOT	Parallel Filled	Asphalt	Flat	Yes	No	No	No	Yes	96	3	13	1	47	37	6632	-71.09306821170	42.82854983210

Appendix H - ADA Survey Summary - NHDOT owned Park and Rides, Bus Terminal, Rail Trail Parking							
Location	ADA compliant?	Total Spaces	Total Accessible	Van Accessible	Bus Terminal?	ADA Discrepencies	Comments
Andover Rail Trail	No	24	2	2	No	No signage. No accessible path to trail.	Need (2) R7-8, (1) R7-8a, accessible path to Rail Trail.
Boscawen	No	42	2	1	No	No wheelchair pavement markings, 2.7% slope, missing sign, sign that was there read "handicapped".	Need (2) R7-8, (1) R7-8a
Bow	Yes	62	3	1	No		
Canterbury	No	10	1	1	No	4% slope	
Chesterfield	No	37	2	1	No	Missing R7-8a, signs faded	Need (2) R7-8, (1) R7-8a
Concord I89	No	100	4	1	No	Van access aisle is 64"w, needs to be 96"w.	
Concord I93	No	342	8	0	Yes	Needs signage at each space, van access aisle is 84"w, needs to be 96"w.	Need (8) R7-8
Dover NH 16 C&J	Yes	440	9	2	Yes		
Epping	No	246	8	1	bus stop	Needs another van accessible space, markings and signs faded. No posted bus schedule.	Need (8) R7-8, (2) R7-8a
Grantham	Yes	52	2	1	shelter		
Hampstead	No	unknown	4	2	No	3% slope.	Unknown spaces due to faded paint. One extra van sign. "Handicapped" verbiage.
Hampton	No	103	5	1	No	Van access aisle is 87"w, needs to be 96"w.	
Hillsboro	Yes	133	5	2	No	3% slope in few areas.	Spaces barely visible due to faded paint.
Hooksett	No	Unknown	Unknown	Unknown	No	No striping or signs.	
Londonderry Exit 4	Yes	250	9	4	Yes		
Londonderry Exit 5	Yes	750	17	4	Yes		
Lyme	Yes	35	2	1	No		Need (1) R7-8a van sign
Nashua Exit 7	Yes	48	3	2	No		"Handicap" verbiage. Signs partially knocked over , one unreadable, blocked by leaves and trash.
Nashua Exit 8	Yes	275	7	3	Yes		If cars pull too far forward access aisle can be blocked. "Handicap" verbiage.
New Hampton	Yes	108	4	1	No		
New London	Yes	132	8	6	Yes		
Plaistow	No	267	11	2	No	Phone is 6" too high.	Disused bustop has tree blocking entrance.
Portsmouth Transportation Center	Yes	1210	29	9	Yes		Overflow lot missing two van signs, terminal missing two van signs, side of terminal missing three van signs.
Randolph Rail Trail lot	No	unknown	0	0	No	No signed or marked spaces. No accessible path to trail.	Needs signage, marked spaces and accessible path to Rail Trail.
Rochester	Yes	199	8	4	Yes		Two glass panels broken on shelter. No posted bus schedule.
Salem	No	474	9	3	Yes	Van access aisles 69"w - need to be min 96"w	
Tilton	Yes	unknown	4	1	No		Could not count total spaces due to faded striping. Signs faded.
Warner	No	24	1	1	No	3% slope in few areas.	Need R7-8a van sign.
Windham	No	67	2	2	shelter	Accessible spaces far from shelter, should be closest. 6% running slope, should be 2% or less.	Shelter inaccessible due to asphalt curb. Sign post crooked. Need (1) R7-8a van sign.

Glossary

ADA: See Americans with Disabilities Act.

ADA Transition Plan: NHDOT's transportation system plan that identifies accessibility needs, the process to fully integrate accessibility improvements into the Statewide Transportation Improvement Program (STIP), and ensures all transportation facilities, services, programs, and activities are accessible to all individuals.

ADAAG: See Americans with Disabilities Act Accessibility Guidelines.

Accessible: A facility that provides access to people with disabilities using the design requirements of the ADA.

Accessible Pedestrian Signal (APS): A device that communicates information about the WALK phase in audible and vibrotactile formats. Also known as APS.

Alteration: A change to a facility in the public right-of-way that affects or could affect access, circulation, or use. An alteration must not decrease or have the effect of decreasing the accessibility of a facility or an accessible connection to an adjacent building or site.

Americans with Disabilities Act: The Americans with Disabilities Act; Civil rights legislation passed in 1990 and effective July 1992. The ADA sets design guidelines for accessibility to public facilities, including sidewalks and trails, by individuals with disabilities. Also known as ADA.

Americans with Disabilities Act Accessibility Guidelines (ADAAG): ADAAG contains scoping and technical requirements for accessibility to buildings and public facilities by individuals with disabilities under the Americans with Disabilities Act (ADA) of 1990.

APS: See Accessible Pedestrian Signal.

Cross Slope: The grade that is perpendicular to the direction of pedestrian travel.

Curb Ramp: A ramp that cuts through or is built up to the curb.

Detectable Warning: A surface feature of truncated domes, built in or applied to the walking surface to indicate an upcoming change from pedestrian to vehicular way.

DOJ: See United States Department of Justice

Element: An architectural or mechanical component of a building, facility, space, site, or public right-of-way.

Facility: All or any portion of buildings, structures, improvements, elements, and pedestrian or vehicular routes located in the public right-of-way.

Federal Highway Administration (FHWA): A branch of the US Department of Transportation that administers the federal-aid Highway Program, providing financial assistance to states to construct and improve highways, urban and rural roads, and bridges.

FHWA: See Federal Highway Administration

Operable Part: A component of an element used to insert or withdraw objects, or to activate, deactivate, or adjust the element.

Pedestrian Access Route (PAR): A continuous and unobstructed path of travel provided for pedestrians with disabilities within or coinciding with a pedestrian circulation path.

Pedestrian Circulation Path: A prepared exterior or interior surface provided for pedestrian travel in public right-of-way.

PROWAG: An acronym for the *Accessibility Guidelines for Pedestrian Facilities in the Public Right-of-Way (formerly called "Public Rights-of-Way Accessibility Guidelines").* These guidelines, first issued in 2005 by the U. S. Access Board, have not yet been adopted by the U.S. Access Board but are recommended by the Federal Highway Administration as a best practice when working in the public right-of-way. This guidance addresses design practices related to pedestrian access to walkways and streets, including crosswalks, curb ramps, street

furnishings, pedestrian signals, parking, and other components of public rights-of-way.

Right of Way: A general term denoting land, property, or interest therein, usually in a strip, acquired for or devoted to transportation purposes. "Right of way" also may mean the privilege of the immediate use of the highway

Running Slope: The grade that is parallel to the direction of pedestrian travel.

Section 504: The section of the Rehabilitation Act that prohibits discrimination by any program or activity conducted by the federal government.

Statewide Transportation Improvement Program (STIP): The Statewide Transportation Improvement Program (STIP) is NHDOTs four year transportation improvement program. The STIP identifies the schedule and funding of transportation projects by state fiscal year (July 1 through June 30). It includes all state and local transportation projects with federal highway and/or federal transit funding along with 100% state funded transportation projects. Rail, port, and aeronautic projects are included for information purposes. The STIP is developed/updated on an annual basis.

State Asset Data Exchange System (SADES): Developed through a partnership with University of New Hampshire Technology Transfer (UNH T^2) for the collection of inventory data. SADES is a cloud-based solution to effectively and uniformly collect critical infrastructure data on a statewide level that provides specifications, methods, training and data exchange services for all stakeholders. NHDOT Office of Federal Compliance leveraged the SADES program to collect sidewalk, curb ramp, crosswalk and Accessible Pedestrian Signals (APS) data.

STIP: See Statewide Transportation Improvement Program

Uniform Accessibility Standards (UFAS): Accessibility standards that all federal agencies are required to meet; includes scoping and technical specifications.

United States Access Board: An independent federal agency that develops and maintains design criteria for buildings and other improvements, transit vehicles,

telecommunications equipment, and electronic and information technology. It also enforces accessibility standards that cover federally funded facilities.

United States Department of Justice (DOJ): The United States Department of Justice (often referred to as the Justice Department or DOJ), is the United States federal executive department responsible for the enforcement of the law and administration of justice.