New Hampshire

NHDOT Guidelines For Temporary Erosion and Sediment Control and Stormwater Management

Department of Transportation

Bureau of Construction

Carol A. Murray, P.E.
Commissioner, NHDOT

This document was funded in part by grants from the New Hampshire Coastal Program, Office of State Planning, as authorized by the National Oceanic and Atmospheric Administration (NOAA) grant award number NAO70Z0123, and from the New Hampshire Department of Environmental Services, as authorized by the United States Environmental Protection Agency.

New Hampshire DOT
Department of Transportation

Erosion control is a vitally important element of projects, or activities that involve disturbing current natural conditions. This manual has been developed to provide assistance in fostering Best Management Practices as a routine part of daily work. I hope it is useful and thank all involved in the production of this manual. Clearly a job well done!

Carol A. Murray, P.E.
Commissioner
NHDOT

Table of Contents

Purpose of this Guidance Manual 2-3
Hay Bale Perimeter Barrier Specifications 4
Hay Bale Perimeter Barrier Details 5
Silt Fence Perimeter Barrier Specifications 6
Silt Fence Perimeter Barrier Details 7
Stone Check Dam Specifications 8
Stone Check Dam Details 9
Sediment Filter Log Specifications 10
Water Quality Testing Specifications 11
Grate Inlet Protection Specifications 12-13
Grate Inlet Protection Details 14-16
Stabilized Construction Entrance Specifications 17
Stabilized Construction Entrance Details 18
Land Grading and Slope Stabilization Specifications 19
Land Grading and Slope Stabilization Details 20
Temporary Water Diversion Utilizing Large Sandbags Specifications 21
Temporary Water Diversion Utilizing Large Sandbags Details 22
Erosion Control Blanket Specifications 23
Erosion Control Blanket Details 24
Dust Control Specifications 25
Water Bar Specifications 26
Water Bar Details 27
References and Acknowledgements 28

This manual contains guidelines intended to provide technical assistance to Highway Designers, Engineers, Engineering Technicians or Construction Industry Personnel involved in selecting Best Management Practices (BMPs) for managing stormwater and controlling erosion and sedimentation on construction sites. The objective of erosion control is to prevent sediment delivery to adjacent properties, nearby drainages, water bodies, rivers, and sensitive or critical areas. This manual suggests a measure for each field BMP, along with a definition, purpose, the conditions where the practice applies, design criteria, materials, maintenance, a photograph, and a graphic illustration.

The successful implementation of erosion control measures depends largely on the ability to select a control strategy that is appropriate to the unique characteristics and problems posed by a specific site. The selection and implementation of erosion and sediment control BMPs and stormwater management planning can be made simpler and less costly by incorporating environmental protection strategies into the start of the Site Plan development process. The user is encouraged to be innovative in erosion and sediment control and stormwater management planning.

EROSION CONTROL PLANNING

Development of an Erosion and Sediment Control and Stormwater Management Plan begins with gathering, mapping and analyzing information about the physical nature of the site. Designers and users must visit the construction site so that its topography, vegetation, drainage, soil characteristics, and sensitive and critical areas are clearly understood, and consolidated within the proposed construction sequences.

The topography of the site, mapped at suitable contour intervals, will allow the identification of drainage patterns, slopes and steep areas. Mapping the patterns of drainage onto, through and off the site enables the delineation of drainage areas. Several interim drainage and earth moving plans may be necessary to show phases of different drainage area boundaries as the site is constructed and graded.

Phased plans will have to be developed to adjust erosion and sediment controls to the changing drainage patterns of the site. Determining the site soil characteristics will help to identify areas for infiltration as well as highly erodible areas, which should be left undisturbed if possible.

Areas where vegetation is to be preserved, such as long or steep slopes, highly erodible soils, and buffer strips along water bodies should be mapped. Downstream wetlands, lakes, streams, sensitive and critical areas that are subject to damage from erosion and sedimentation must also be identified, detailed, and confirmed.

The most effective way to minimize the likelihood of sediment pollution is to minimize the opportunity for erosion to occur. The best way to reduce the amount of erosion that occurs is

to minimize the amount of time that an area is exposed.

Stabilization of disturbed areas must occur as soon as work has been completed on each phase. Properly sequence the construction phases so that grading features minimize sheet runoff, soil erosion, and sedimentation more cost effectively.

MAINTENANCE OF PLAN CONTROLS

Daily inspections are required to monitor controls, devices and features to sequence with site activities as site development progresses. Inspections at the end of each day, should confirm that the BMPs are applied and functioning properly. Replacing and maintaining erosion and sediment controls is more cost effective than replacing pipes, rebuilding slopes, grading cuts and removing sediment from outside project limits. Maintenance of Plan controls is the Best Management Practice and is much more cost effective.

Unacceptable maintenance of temporary erosion and sediment control and stormwater management, can include conditions such as: silt fences folded back from sediment buildup or not toed in properly; stone check dams washed out and not replaced from brief intense rain storm events; slopes not temporarily or permanently stabilized that become rilled and gullied; and sedimentation traps and basins that are not cleaned out or replaced. An evaluation of the site BMPs can result in the suspension of work if corrective action measures are not taken immediately.

SCOPE

This manual is intended to represent information on state-of-the art erosion and sedimentation control measures. The concepts, designs and philosophies presented here cannot, and should not, be included in totality at every location where erosion can occur. Each location is unique and offers an individual the opportunity to enhance the particular erosion and sedimentation control measures(s) for effectiveness.

5/1/2002

Robert S. Decker
District Environmental Coordinator
Bureau of Construction
NHDOT

Standard Specifications for Hay Bale Perimeter Barrier

Definition

A temporary perimeter barrier of baled hay or similar material used to intercept sediment-laden runoff from small drainage areas of disturbed soil. Installed across or at the toe of a slope.

Purpose

The purpose of a hay bale perimeter barrier is to reduce runoff velocity and effect deposition of the transported sediment load. Hay bale perimeter barriers have an estimated service life of three (3) months.

Conditions Where Practice Applies

The hay bale perimeter barrier is used where:

1. There is no concentration of water in a channel or other drainage way above the barrier.

2. Erosion would occur in the form of sheet erosion.

3. Length of slope above the hay bale perimeter barrier does not exceed these limits:

Constructed Percent Slope	Slope Length	Length of Barrier m (ft.)
2:1	50	7 (25)
2-1/2:1	40	15 (50)
3:1	33	23 (75)
3-1/2:1	30	30 (100)
4:1	25	38 (125)

Where slope gradient changes through the drainage area, steepness refers to the steepest slope section draining toward the hay bale perimeter barrier.

Design Criteria

A design is not required. All bales shall be placed on the contour with the cut edge of bale adhering to the ground.

Maintenance

During and after runoff event(s) inspect hay bales frequently and repair/replace promptly as needed or as directed. Remove sediment when accumulation reaches one half the bale height or as directed.

HAY BALE PERIMETER BARRIER DETAILS

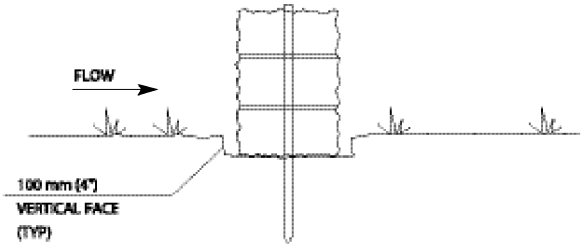

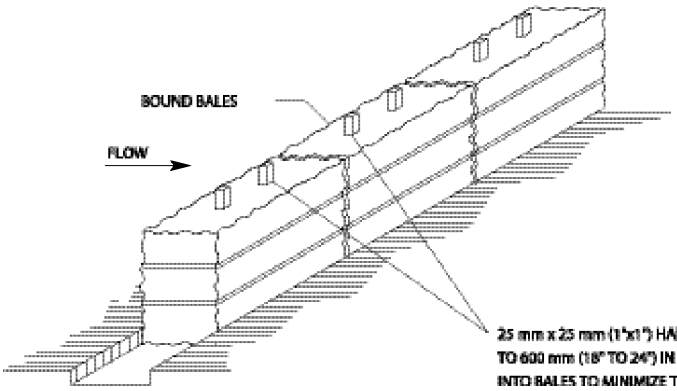

ANCHORING DETAIL

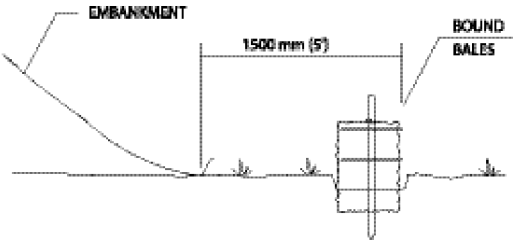

BARRIER LOCATION

CONSTRUCTION REQUIREMENTS

1. Place bales 1500 mm (5 ft.) beyond the toe of slope or on the contour and in a row with ends tightly abutting the adjacent bales, with no gaps, wedge loose bale material between bales.
2. Place bales with bindings horizontal and securely anchor in place by driving two stakes through the bale.
3. Remove bales, as directed, when they are no longer needed. Before bales are removed, stabilize with vegetation any sediment which is permitted to remain in place. When bales are removed, fill trench with suitable earth material and stabilize with vegetation.
4. Drainage area shall be no more than 0.4 ha (1ac) per 30m (100LF) of hay bale perimeter barrier for slopes less than 25%.

Standard Specifications for Silt Fence Perimeter Barrier

Definition

A temporary barrier of geotextile fabric (filter fabric) installed across a slope used to intercept sediment-laden runoff from small drainage areas of disturbed soil.

Purpose

The purpose of a silt fence is to reduce runoff velocity and effect deposition of transported sediment load. Limits imposed by ultraviolet stability of the fabric will dictate the maximum period the silt fence may be used.

Conditions Where Practice Applies

A silt fence may be used subject to the following conditions:

1. Maximum allowable slope lengths contributing runoff to a silt fence are:

Slope Steepness	Maximum Slope Length m (ft.)
2:1	15 (50)
3:1	23 (75)
4:1	38 (125)
5:1	53 (175)
Flatter than 5:1	61 (200)

2. Maximum drainage area for overland flow to a silt fence shall not exceed 0.2 ha (1/2 acre) per 30 m (100 LF) of fence.

3. Erosion would occur in the form of sheet erosion.

4. There is no concentration of water flowing to the barrier.

Design Criteria

Design computations are not required. All silt fences shall be placed as close to the work area as possible, and the area below the fence must be undisturbed or stabilized. Do not construct silt fences in wetlands or across streams.

A detail of the silt fence shall be shown on the plan, and contain the following minimum requirements:

1. The type, size, and spacing of fence posts.
2. The size of woven wire support fences.
3. The type of filter fabric used.
4. The method of anchoring the filter fabric.
5. The method of fastening the filter fabric to the fencing support.

Materials

Reference the NH Standard Specifications for Road and Bridge Construction (See the SPECIAL PROVISION for the Amendment to Section 645: Erosion Control : Silt Fences)

Maintenance

Inspect during and after runoff event(s). Perform maintenance as needed or directed and remove material when "bulges" develop in the silt fence.

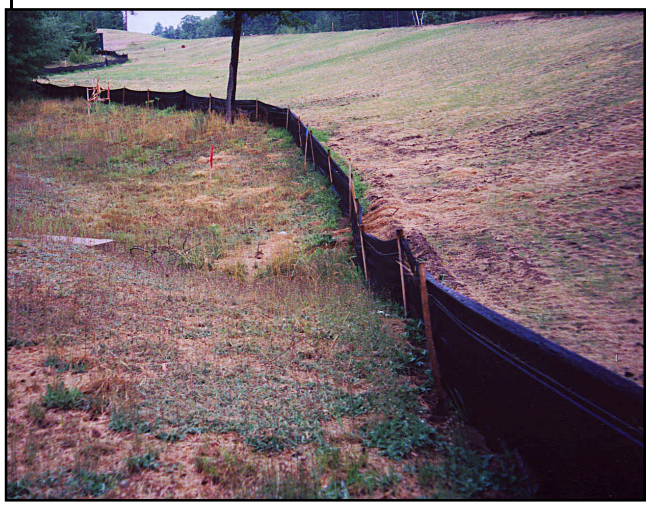

Silt Fence Perimeter Barrier Details

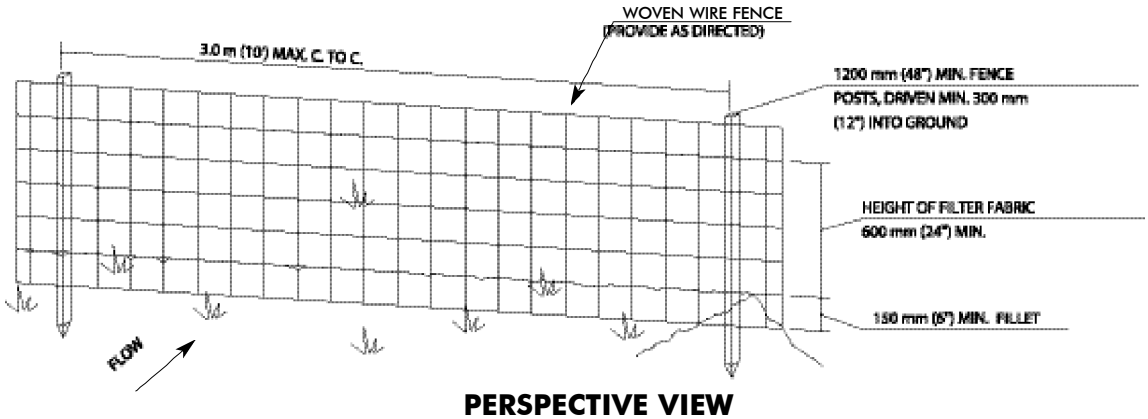

PERSPECTIVE VIEW

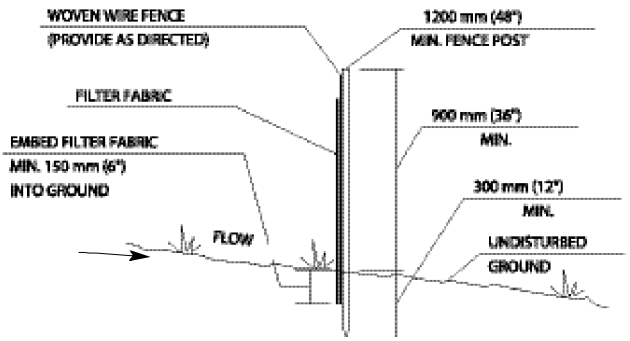

ANCHORING DETAIL

CONSTRUCTION REQUIREMENTS

1. Securely fasten filter fabric and woven wire fence (if provided) to fence posts with wire ties, staples, or other approved methods.
2. Securely fasten filter fabric to the woven wire fence with ties spaced every 600mm (24 in.) at the top, midsection and bottom.
3. When two sections of filter fabric adjoin each other, overlap the sections by 150mm (6 in.), fold, and staple at a post. Securely splice woven wire fence at a post.
4. Place silt fence 1500 mm (5 ft.) beyond the toe of slope or on the contour. At the end of silt fence runs, flare uphill.
5. Provide woven wire fence and/or closer fence post spacing in areas where high runoff volumes are anticipated, or in low spots where sediment will be collected.
6. Remove silt fence, as directed, when no longer needed. Before the silt fence is removed, stabilize with vegetation any sediment which is permitted to remain in place.

Standard Specifications for Stone Check Dam

Definition
Small temporary stone dams constructed across a drainageway.

Purpose
To reduce erosion in drainage channel by restricting the velocity of flow in the channel and promoting deposition of sediment.

Conditions Where Practice Applies
This practice is used as a temporary or emergency measure to limit erosion by reducing flow in channels that are degrading or subject to erosion; and where permanent stabilization is impractical due to short period of usefulness and time constraints of construction. Check dams will not be placed in live streams.

Design Criteria
Drainage Area: Maximum drainage area above the check dam shall not exceed 0.5 ha (1.2 ac.).

Height: Not greater than 600 mm (2 ft.). Center shall be maintained a minimum of 100 mm (4 in.) lower than abutments at natural ground elevation.

Spacing: Space check dams as necessary in the channel so that the crest of the downstream dam is at the elevation of the toe of the upstream dam.

Materials
Stone Size: Use stone fill Item 585.3 Class C or Item 585.4 Class D.

Maintenance
Inspect check dams after each runoff event greater than 12 mm (0.5 in.) and on a weekly basis. Correct all damage immediately. If significant erosion has occurred between structures, install a liner of stone or other suitable material in that portion of the channel.

Remove sediment accumulated behind the check dam as needed or directed to allow channel to drain through the stone check dam and prevent large flows from carrying sediment over the dam. Replace stones as needed or directed to maintain the design cross-section of the structures.

Stone Check Dam Details

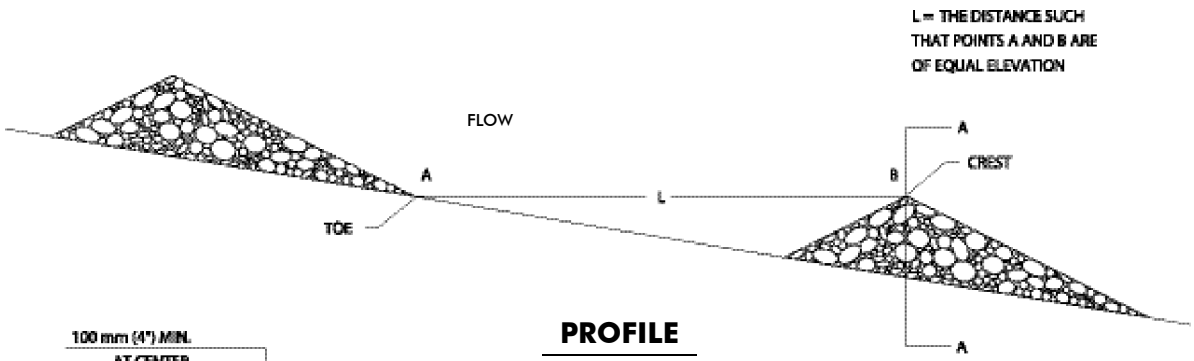

PROFILE

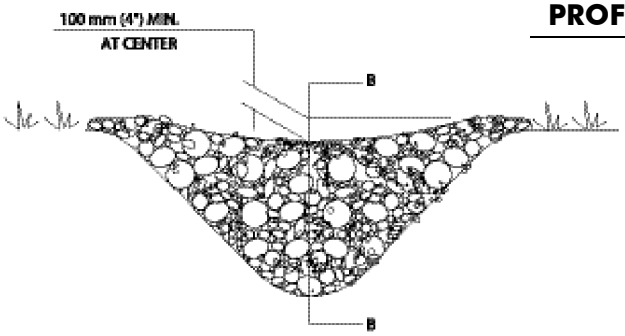

SECTION A-A

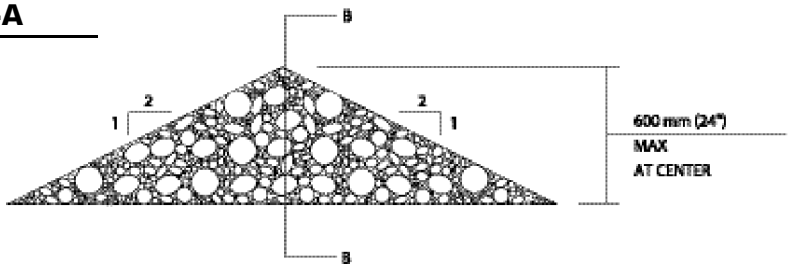

SECTION B-B

CONSTRUCTION REQUIREMENTS

1. Place stone to the lines, grades and locations as shown on the plan or as directed.
2. Set spacing of stone check dams so that the elevation of the crest of the downstream dam is at the same elevation as the toe of the upstream dam.
3. Extend the stone to a point beyond the ditch banks to prevent cutting around the dam.
4. Protect the channel downstream of the lowest check dam from scour and erosion with stone or liner as needed or directed.
5. Remove stone, as directed, when no longer needed. After barrier is removed, stabilize with vegetation any sediment which is permitted to remain in place.

Standard Specifications for Sediment Filter Logs

Definition
A temporary sediment barrier of excelsior or coconut fiber used to intercept sediment runoff and help stabilize slopes.

Purpose
The purpose of the sediment filter log is to reduce down slope sediment delivery and help filter and contain sediment during construction.

Conditions Where Practice Applies
The sediment filter log is used where the best management practice applies including slope stabilization, sediment retention and turf establishment. Protects storm drains, runoff ditches, brooks, streams, rivers, lakes and riparian banks.

Design Criteria
A design is not required. Sediment filter logs shall be placed on the contour and as recommended by the manufacturer for proper installation.

Maintenance
During and after significant rainfall events inspect filter logs. On a daily basis, monitor sediment filter logs for performance. Repace logs where damage or repair is necessary.

Standard Specification for Water Quality Testing

Definition
The approved Nephlometric Method of testing water quality from a brook, stream, river or lake.

Purpose
The purpose of testing water quality is to determine and document what nephlometric turbid units (NTU's) are during a temporary disturbance in any watercourse.

Conditions Where Practice Applies
The standard method for testing water is outlined in the current Standard Specifications for Transportation Materials and Methods of Sampling and Testing, Part II Tests, R 23-99 and R-24-99, adopted by the American Association of State Highway and Transportation Officials (AASHTO).

Materials
Testing equipment shall be able to give a direct reading at the site of sampling.

Maintenance
Perform testing when work activity will create turbid water. Suspend work activity where turbidity tests will exceed acceptable limits.

Standard Specifications for Grate Inlet Protection

Definition

A permeable barrier installed around grate inlets in the form of a fence, berm or excavation, thereby reducing sediment content of stormwater runoff.

Purpose

To reduce the amount of sediment entering a storm drain system through grate inlets.

Conditions Where Practice Applies

There are four (4) specific types of grate inlet protection practices that vary according to their function, location, drainage area and availability of materials:

I. Excavated
II. Stone & Block
III. Stone & Wire Mesh
IV. Sediment Filter Bags

Use these practices where the drainage areas to grate inlets are disturbed, or when it is not possible to temporarily divert the storm drain outfall into a trapping device and watertight blocking of grate inlets is not advisable. Do not use in place of sediment trapping devices. This may be used in conjunction with storm drain diversion to help prevent siltation of pipes installed with low slope angle.

In selecting the appropriate grate inlet protection type, roadside safety shall be considered.

Use Types IV and V primarily in paved areas prior to final stabilization of contributing drainage areas.

Design Criteria

Type I - Excavated

Drainage Area: Drainage area to the inlet device varies. Provide storage so that the 2-yr. storm does not overtop the grate.

Height: Excavation should be 300 mm (1 ft.) minimum and 600 mm (2 ft.) maximum below top of grate.

Side Slopes: Side slopes shall be relatively flat for a minimum of 600 mm (2 ft.) from structure and no greater than 3:1.

Shape: Shape the excavated basin to fit conditions with the longest dimension oriented toward the longest inflow area to provide maximum trap efficiency.

Type II - Stone & Block

Drainage Area: Drainage area is based on permanent drainage design. Do not use this type if a 2-yr. storm overtops the blocks.

Height: Total block height shall not exceed 600 mm (2 ft.).

Type III - Stone & Wire Mesh

Drainage Area: Drainage area is based on

permanent drainage design.

Stone Height: Stone height over inlets shall be 300 mm (12 in.) minimum.

Type IV - Sediment Filter Bags

Sediment filter bags, in general, are porous pouches, made of woven or non-woven fabric that fit inside an inlet structure. This shall be an approved, manufactured product that fits securely inside the inlet structure. An overflow orifice shall be provided a minimum of 450 mm (18 in.) from the bottom of the filter. There shall also be an approved method, refer to the Erosion Control Plan, for removing the filter and accumulated sediment from the inlet structure for cleaning and maintenance purposes.

Materials

Type I - Excavated

Stone Size: Use stone fill Item 585.4 Class D or smaller.

Type II - Stone & Block

Stone Size: Use stone fill class D or smaller, as directed.

Blocks: Use standard 200 mm (8 in.) concrete blocks.

Wire Mesh: Wire mesh or hardware cloth shall not permit passage of stones.

Fabric: The geotextile fabric shall be of a woven material. Reference the NH Standard Specifications for Road and Bridge Construction (See the SPECIAL PROVISION for the Amendment to Section 645: Erosion Control: Silt Fences). An approved non-woven material may be used.

Type III- Stone & Wire Mesh

Stone Size: Use stone fill class D or smaller, as directed.
Wire Mesh: Wire mesh or hardware cloth shall not permit passage of stones.

Type IV - Sediment Filter

Materials shall be as provided by manufacturer.

Maintenance

Inspect each inlet protection device after each runoff event greater than 12 mm (0.5 in.) and on a weekly basis. Remove accumulated sediment as directed. Repair damaged protection devices as necessary.

EXCAVATED GRATE INLET PROTECTION DETAILS

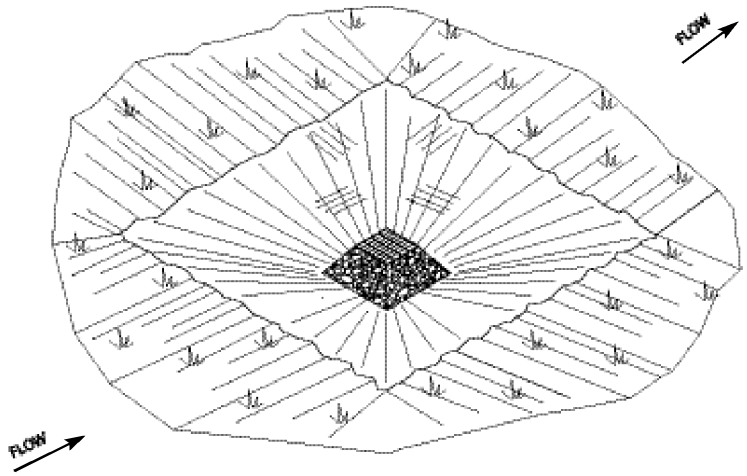

PERSPECTIVE VIEW

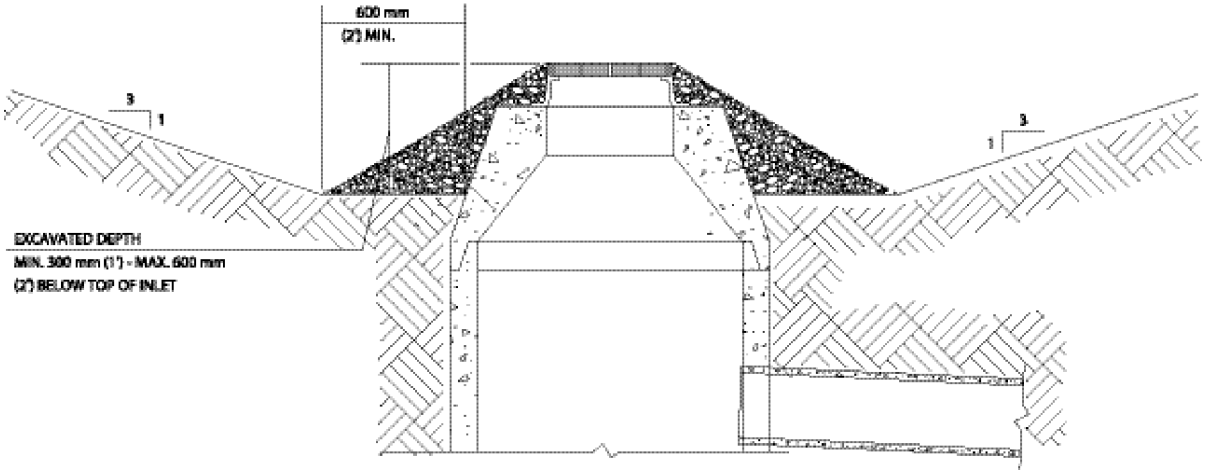

SECTION

CONSTRUCTION REQUIREMENTS

1. Grade approach to the inlet uniformly around the basin.
3. Upon stabilization of contributing drainage area, seal weep holes and backfill excavated area with approved material to final grade. Compact material properly and stabilize with permanent seeding.

Stone & Block Grate Inlet Protection Details

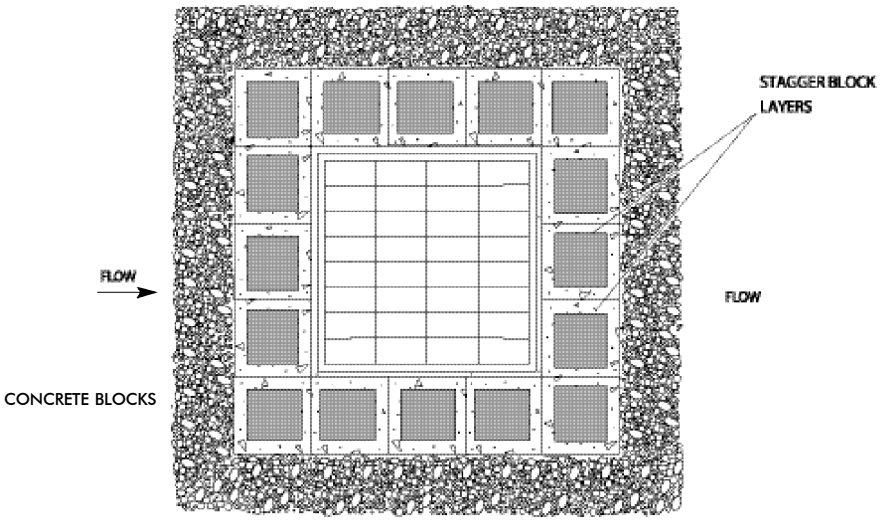

PLAN

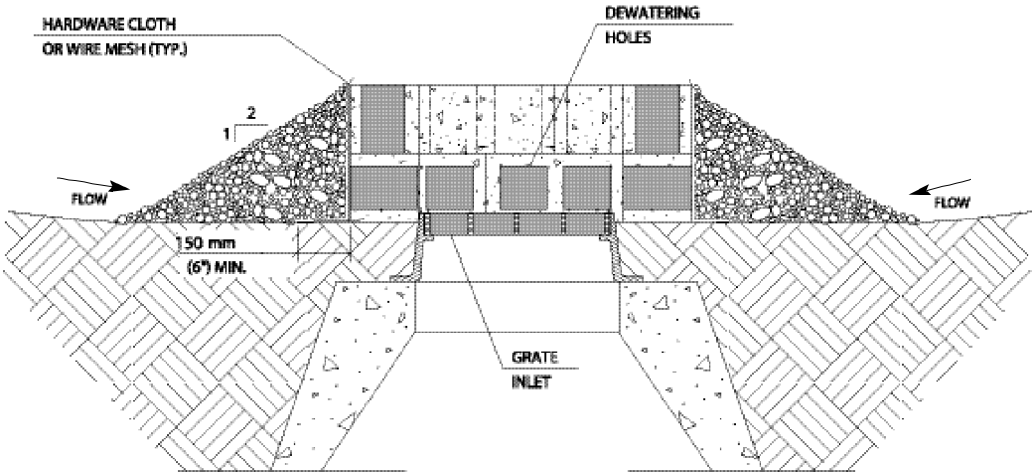

SECTION

CONSTRUCTION REQUIREMENTS

1. Lay first course of block on its side for dewatering. Place blocks against frame for support.
2. Place hardware cloth or wire mesh over block openings to support stone.
3. Place stone on a 2:1 or flatter slope up to the top of the block.
4. Remove stone and blocks, as directed, when no longer needed. Before stone and blocks are removed, stabilize with vegetation any sediment which is permitted to stay in place.

Sediment Filter Bag Grate Inlet Protection Details

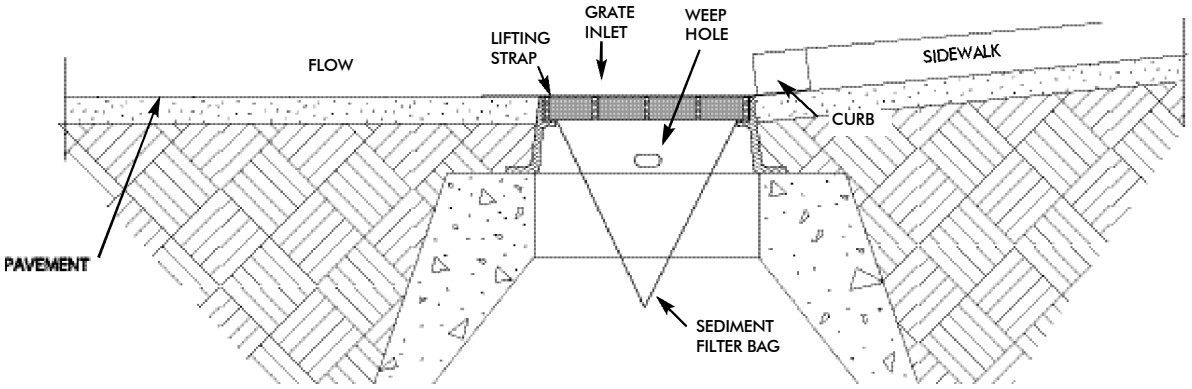

SECTION

CONSTRUCTION REQUIREMENTS

1. Remove drainage inlet grate and place sediment filter bag around the frame, replace grate and sediment filter bag in position or follow manufacturer's recommendation. Lifting straps shall be exposed and ready for maintenance procedures.
2. Inspect sediment filter bag weekly and after every rainfall event.
3. Replace, clean or remove sediment filter bag as directed.

Standard Specifications for Stabilized Construction Entrance

Definition
A stabilized construction entrance is a portion of the construction road, which is constructed with filter fabric and large stone.

Purpose
Temporary stabilized construction entrances provide an area where mud can be dislodged from tires before the vehicle leaves the construction site to reduce the amount of mud transported onto paved roads.

Conditions Where Practice Applies
Temporary stabilized construction entrances can be used wherever traffic leaves a construction site and moves directly onto a public road or street.

Design Criteria
Pad Dimensions
The minimum length of the stone pad should be 15 m (50 ft.) Longer entrances will provide better cleaning action. The pad should extend the full width of the construction access road or 3m (10 ft.) whichever is greater. The aggregate should be placed at least six inches thick.

Materials
Stone Size
The stone size shall meet the requirements of erosion control stone Section 585.2.1.4. Stone used for the construction entrance should be large enough so that it does not get picked up and tracked off the site by the vehicle traffic.

Filter Fabric
The geotextile filter fabric shall be placed over the entire area prior to placing the stone.

Maintenance
Mud and soil particles will eventually clog the voids in the stone and the effectiveness of the stone pad will not be satisfactory. When this occurs, the pad should be topdressed with new stone. Complete replacement of the stone pad may be necessary if it becomes completely clogged.

STABILIZED CONSTRUCTION ENTRANCE DETAILS

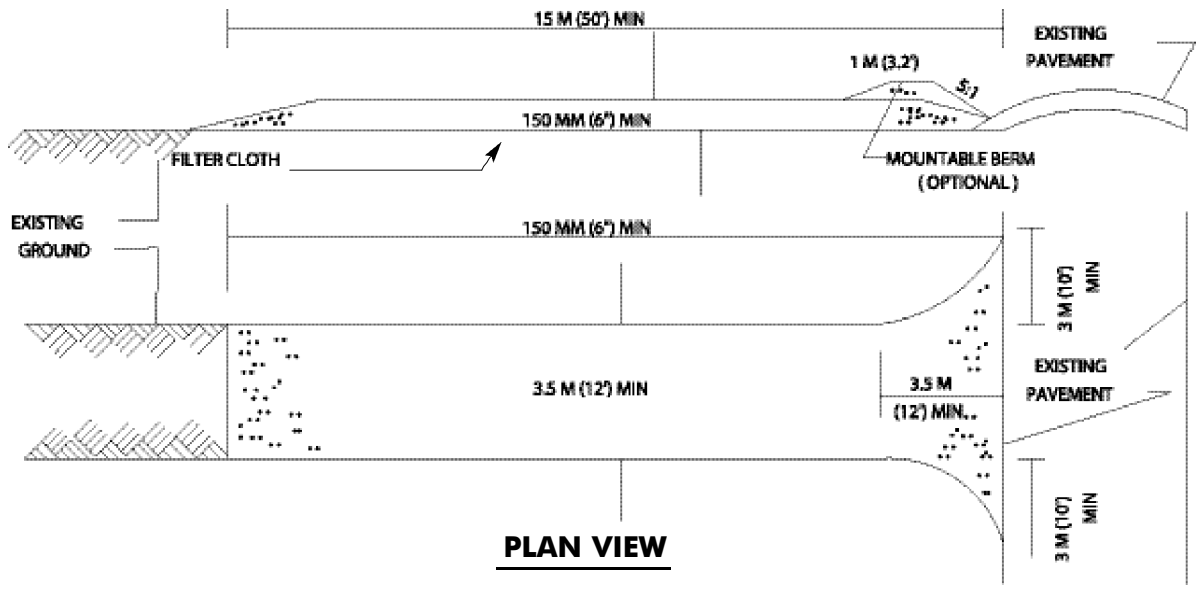

CONSTRUCTION REQUIREMENTS

1. Stone Size - Use 37 mm (1 1/2 in.) stone.
2. Length - Not less than 15m (50 ft.) (Except on a single residence lot where a 9m (30 ft.) minimum length would apply).
3. Thickness - Not less than 150mm (6 in.).
4. Width - 3.5 meter (twelve (12) ft.) minimum, but not less than the full width at points where ingress or egress occurs. 7 meters (twenty-four (24) ft.) if single entrance to site.
5. Filter Cloth - Will be placed over the entire area prior to placing of stone.
6. Surface Water - All surface water flowing or diverted toward construction entrances shall be piped across the entrance. If piping is impractical, a mountable berm with 5:1 slopes will be permitted.
7. Maintenance - The entrance shall be maintained in a condition which will prevent tracking or flowing of sediment onto public rights-of-way. All sediment spilled, dropped, washed or tracked onto public rights-of-way must be removed immediately.
8. When washing is required, it shall be done on an area stabilized with stone and which drains into an approved sediment trapping device.
9. Periodic inspection and needed maintenance shall be provided after each rain.

Standard Specifications for Land Grading and Slope Stabilization

Definition

Land grading and slope stabilization are temporary erosion control practices. Tracking the soil surface by mechanical means creates horizontal grooves, depressions or steps that run parallel to the contour or perpendicular to the direction of the slope.

Purpose

Land grading and slope stabilization reduce the speed of runoff, increase the infiltration, and trap sediment. Surface roughening also helps establish vegetative cover by reducing runoff velocity and giving seed an opportunity to hold and grow. Slopes that are not fine graded and that are left in a roughened condition can also control erosion.

Conditions Where Practice Applies

Land grading, slope stabilization and surface roughening are appropriate for all slopes. To slow erosion, roughening should be done as soon as possible after the vegetation has been removed from the slope. Cut and fill slopes should be tracked during the fine grading operation and during the topsoil operation. Slopes should not be back-bladed, leaving a smooth surface for potential erosion.

Planning Considerations

Different methods can be used to roughen the soil surface on slopes. They include stair-step grading, grooving (using disks, spring harrows, or teeth on a front-end loader), and tracking (operating a crawler tractor up and down a slope, leaving the cleat imprints parallel to the slope contour). The selection of an appropriate method depends on the grade of the slope, mowing requirements after vegetative cover is established, whether cutting or filling formed the slope, and the type of equipment available.

Provisions shall be made to conduct surface runoff to storm drains, protected outlets and sediment basins. Slope benches or diversions shall be constructed to convey runoff into stable and protected outlets.

Whenever possible runoff water shall be diverted away from the top of cut and fill slopes to protected outlets or grade control structures.

Maintenance

All slopes should be checked periodically to see that vegetation is in good condition. Any rills or damage from erosion and animal burrowing should be repaired immediately to avoid further damage. If seeps develop on the slopes, the area should be evaluated to determine if the seep would cause an unstable condition. Diversions, berms and waterways in the land grading area should be checked to see that they are functioning properly. Problems found during the inspections should be repaired promptly. Areas requiring re-vegetation should be repaired immediately. Slopes and associated practices utilizing vegetation should be limed and fertilized as necessary to keep the vegetation healthy.

Land Grading and Slope Stabilization Details

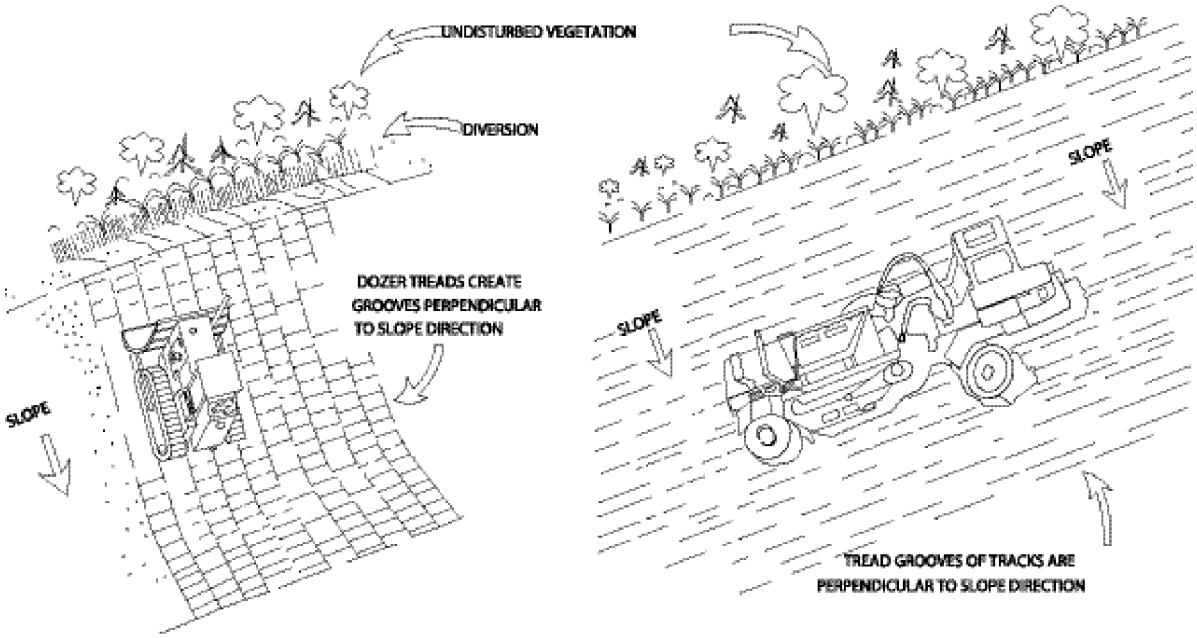

UNVEGETATED SLOPES SHOULD BE TEMPORARILY SCARIFIED TO MINIMIZE RUNOFF VELOCITIES. THIS CAN BE DONE MECHANICALLY WITH THE USE OF VARIOUS HEAVY EQUIPMENT.

CONSTRUCTION REQUIREMENTS

1. Maintain cut and fill slopes with permanent or temporary vegetation as soon as grading is completed.
2. Provide appropriate sediment control measures to prevent off-site sedimentation.
3. During fall/winter construction shutdown, slopes can be mulched over a minimum snow cover at a heavier application rate of coverage.
4. Inspect slopes periodically for proper maintenance.

Standard Specifications for Temporary Water Diversion Utilizing Large Sandbags

Definition
A temporary water diversion is a structure constructed to allow excavation and deposition of material below the bed of any water body.

Purpose
To divert flow of water and/or isolate an area of excavation and for stone fill placement in a river, stream, pond or lake. This enables the work to be accomplished in water, in a contained area where turbid water can be monitored and controlled.

Conditions Where Practice Applies
This practice is used for excavation and stone fill placement, where work is in water bodies with depths not greater than 1.5 m (5 ft.).

Can also be used as a cofferdam for bridge construction.

Design Criteria
A design should be submitted with the erosion control plan detailing the area of operation. The plan should also include the diversion alignment from shoreline for isolated area of work. Sandbags can be mechanically loaded and should be placed according to Erosion Control Plan.

Materials
The material used in construction is a woven polypropylene of varying weights from 142 to 227 grams per meter squared (5 to 8 ounces per square yard) and can be coated with a poly film or uncoated. The bag may have four lifting loops generally 254 mm (10 in.) long, measures approximately 889 x 1016 x 991 mm (35 x 40 x 39 in.), and shall be rated for 1.13 kilogram (2500 pounds), with a 5:1 safety ratio (12500). Clean sand, which is the easiest to load (less than 3% silt is recommended) can be removed and salvaged for later use.

Maintenance
Daily maintenance should occur while this method is being used and after every storm event greater than 0.5 inches. Care should be taken not to puncture or break bags during installation and removal process.

Temporary Water Diversion Utilizing Large Sandbags Details

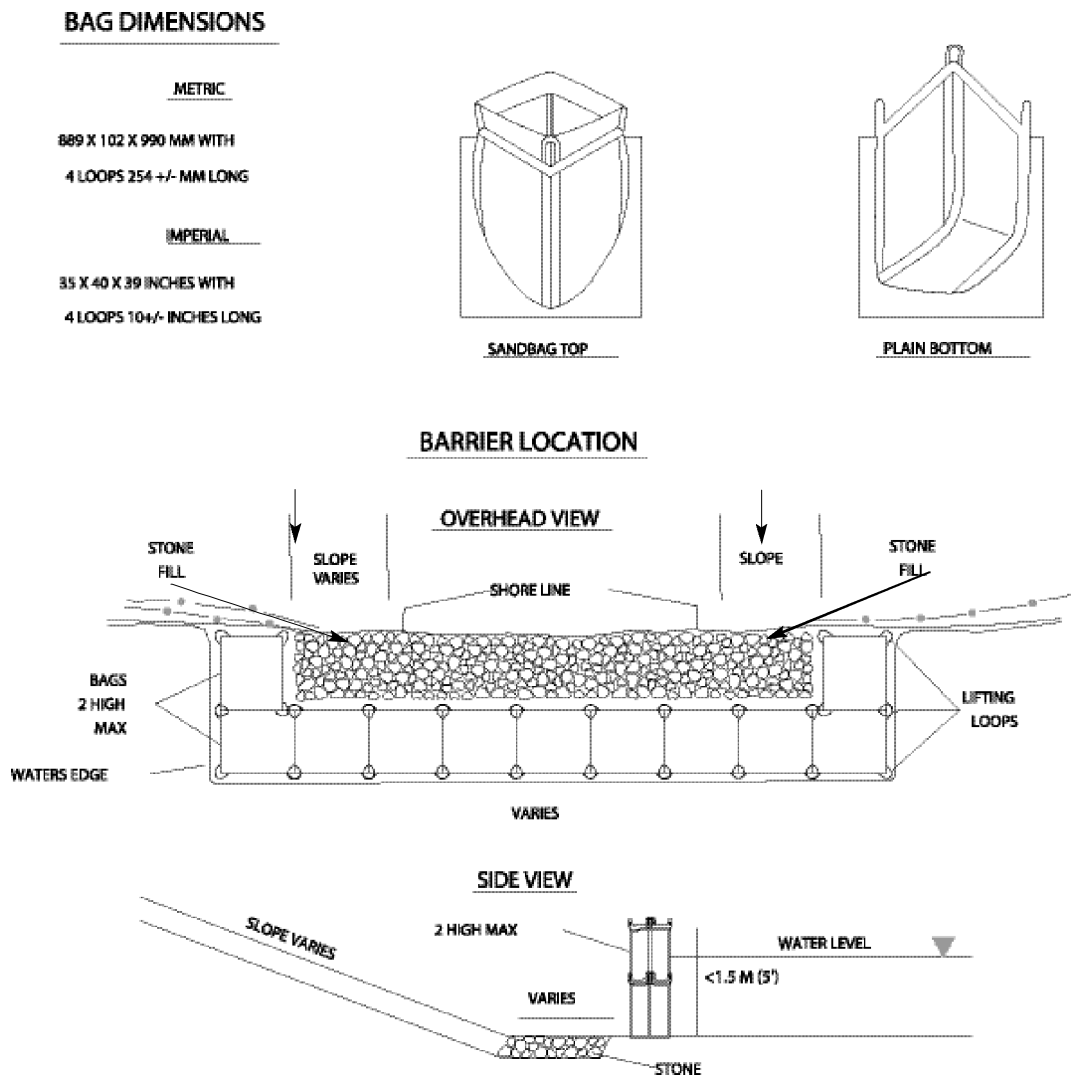

CONSTRUCTION REQUIREMENTS

1. Place sandbags beyond toe of stone fill with ends tightly abutting adjacent sandbags.
2. Where channel conditions do not allow placing of large sandbags, smaller sandbags may be used to level for placement of larger sandbags.
3. It is recommended that sandbags are not placed greater than two bags high.
4. Remove sandbags as directed, when they are no longer needed. Dispose of sand and bag in an approved manner.

Standard Specifications for Erosion Control Blankets

Definition

Erosion control blankets are made of biodegradable materials such as jute matting, excelsior wood fiber, coconut fiber, straw or interwoven paper strips, and netting made of a biodegradable polypropylene or extruded plastic. These materials are formed into sheets that are used as temporary or permanent mulching to stabilize disturbed slopes.

Purpose

Erosion control blankets provide the same benefits as other types of mulching, but are much more stable and longer lasting than normal mulches and can be used in areas of moderate concentrated flow such as ditches and swales, as well as, protection for dust control in phase construction where seeding is outside of the growing season.

Conditions Where Practice Applies

Temporary erosion control blankets are used to stabilize ditches and swales with profile grades of less than 6% under low to moderate flow conditions. In addition, temporary erosion control blankets should be installed on slopes where the soil is erodable but will support vegetation, and may be used on shoulder berms, esplanade strips, and curb sections.

Design Criteria

Erosion control blankets should be laid and stapled down on smooth, prepared surfaces, and maintain continuous contact with the disturbed soil surface to be effective. This is especially important when using rigid materials. Failure to maintain contact will allow stormwater to flow underneath the blanket causing mounding and erosion.

Materials

Erosion control blankets shall meet the requirements for Erosion Control Section 645. on the Department's approved products list of materials.

Maintenance

Erosion control blankets should be inspected periodically and prior to, during and after storm events to ensure that the blanket is in continuous contact with the soil surface and in good repair until vegetation is firmly established (95% of the soil surface is covered with vegetation). Blankets should be repaired and re-stapled as necessary to ensure proper function.

Erosion Control Blanket Details

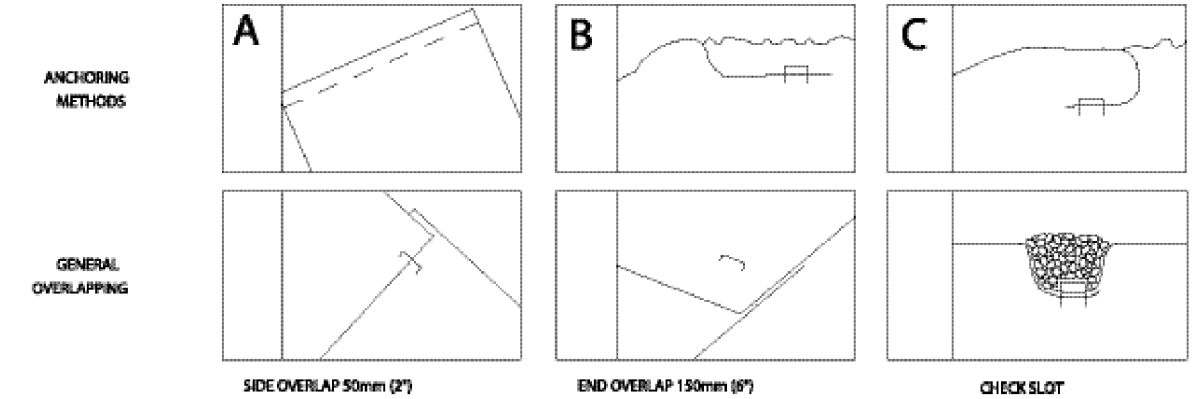

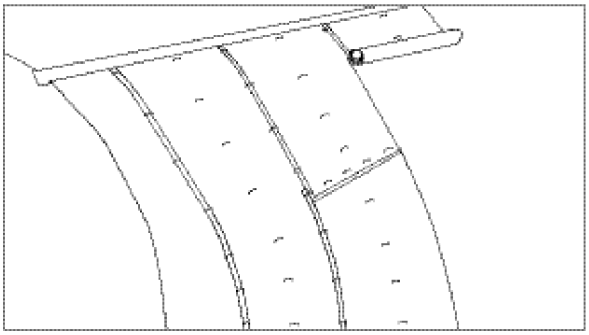

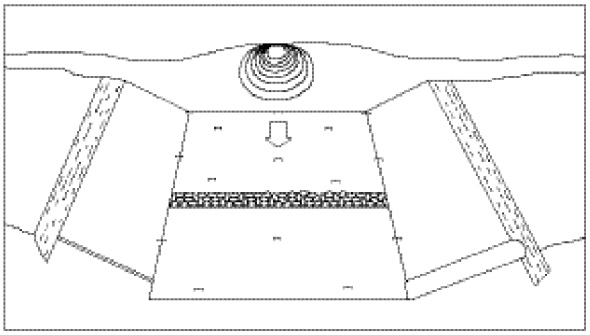

SLOPES

1. Grade and smooth slope. Apply fertilizer and seed prior to installing blanket.
2. Anchor blankets at top of slope. Use anchoring method "A" for 4:1 slopes, "B" for 3:1 slopes and "C" for 2:1 and steeper slopes.
3. Unroll blankets in direction of water flow. Place blankets loosely and in full contact with the soil.
4. Overlap blanket edges approximately 50mm (2 in.) and staple. Install blankets so edge overlaps are shingled away from prevailing winds.
5. Overlap blanket ends 150 mm (6 in.). Upper blanket over lower blanket, and staple using five staples (anchor "A").
6. Cut excess blanket with scissors and anchor at end of slope. Use anchoring method "A" for 4:1 slopes and "B" for slopes 3:1 or steeper.

DITCH

1. Grade and smooth channel. Apply fertilizer and seed prior to installing blankets.
2. Anchor blankets at top of channel ("B"). Backfill with check slot material. For culvert outfalls, place blanket at least 305mm (12 in.) upstream from pipe opening.
3. Install a blanket in the center of the channel, in the direction of the water flow. Additional blankets are installed at the edges of this center blanket.
4. Construct check slots with soil, gravel, or stone, in the middle 13.7m (45 ft.) and end of each blanket.
5. Overlap side channel blanket edges 102mm (4 in.) over the center channel blanket and staple.
6. Anchor the top edge of side channel blankets ("B").
7. Anchor the terminal ends of blankets in a check slot.

Standard Specifications for Dust Control

Definition
Dust control is the reduction of dust on construction sites and roads. Dust is a particulate material and a regulated pollutant, as well as a nuisance and potential safety hazard to the traveling public.

Purpose
Dust control reduces the blowing and movement of dust particles from exposed soil surfaces and reduces the on-site and off-site presence of airborne substances, which may be harmful or injurious to human, animal, or plant life or may cause a traffic safety hazard.

Conditions Where Practice Applies
This practice applies to any site where dust may cause either an on-site or off-site problem. Before the suspension of any work the exposed work area shall be treated to control windborne dust.

Planning Considerations
Dust can result from a number of construction activities such as equipment operation, demolition, vehicle traffic, and also from wind erosion. Access roads on the site, whether for vehicle ingress and egress or for construction equipment moving on the site, is generally the largest contributor of dust on a construction site.

In planning for dust control, it is obvious that the least amount of exposed surface would produce the least amount of dust. This planning shall consist of providing and maintaining safe and passable traffic accommodations for public travel.

Materials
Temporary seeding and mulching for vegetative cover at disturbed areas provides the most practical method.

Water sprinkling on dry and exposed soils prevents dust particles from becoming airborne, and is normally performed using a water distribution truck.

Mulching, when properly applied offers a fast effective means to control dust. In order to prevent the mulch from being blown away, an approved tackifier shall be utilized.

Calcium Chloride may be applied by mechanical or physical means at a uniform rate recommended by the manufacturer that keeps the surface moist but not so high as to cause water pollution or plant damage.

Chemical stabilization such as asphalt emulsions, latex emulsions, resin in water or other approved products can be sprayed onto exposed areas.

Matting for surfaces of ditch and slope stabilization during phase construction shall be constructed to a smooth and even condition to permit bedding of the matting. In driving the staples, care shall be taken to not form depressions or bulges in the surface of the matting.

Maintenance
When temporary dust control measures are used, repetitive treatments should be applied as needed to accomplish control.

Mechanical sweepers can be utilized for paved surfaces such as parking lots, roads or streets that may be a part of the dust problem.

Standard Specifications for Water Bars

Definition
A temporary earth berm, ridge or channel constructed diagonally across a sloping road that is subject to erosion.

Purpose
To limit the amount of erosive volumes of water runoff by diverting overland flow to predetermined control sites.

Conditions Where Practice Applies
Where runoff control and protection is necessary to prevent erosion on long narrow sloping roads that are generally less than 30 m (100 ft.) in width.

Design Criteria
Design computations are not required.

The recommended design height shall be a minimum 450 mm (18 in.) measured from channel bottom to berm/ridge top.

The base width of the berm/ridge shall be 2 m (6 ft.) minimum.

The spacing of the water bars is recommended at:

Slope (%)	Spacing (m/ft.)
< 5	38 (125)
5 to 10	30 (100)
10 to 20	23 (75)
20 to 35	17 (50)
> 35	8 (25)

It is recommended the positive grade shall not exceed 2% and a crossing angle of 60 degrees is preferred.

Materials
Use erosion control stone for protection at outlets. If necessary, a geotextile fabric can be used to help filter water flow.

Maintenance
An inspection for erosion damage and sediment, especially on haul roads, shall be conducted daily with the necessary repairs performed immediately.

WATER BAR DETAILS

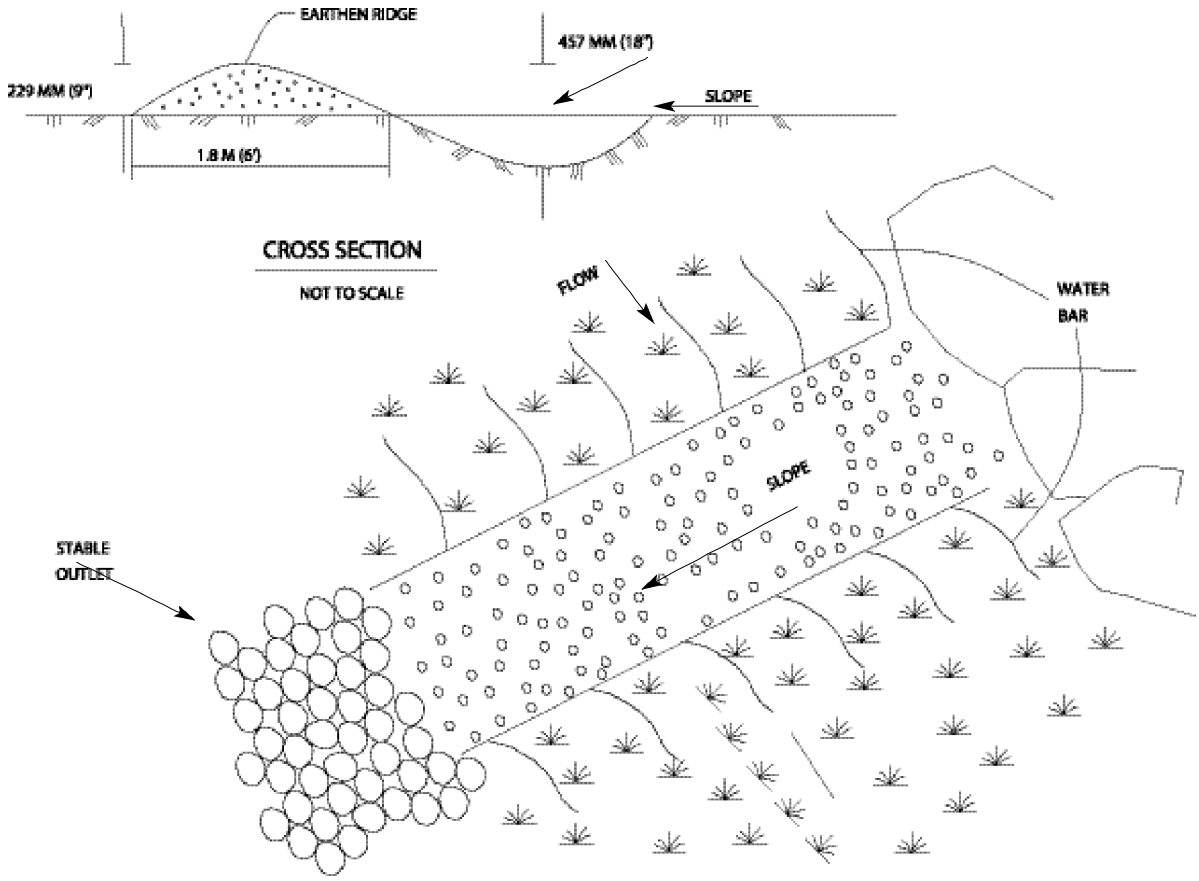

CONSTRUCTION REQUIREMENTS

1. Install the water bar as soon as the right of way is cleared and graded.
2. Disk or strip the sod from the base for the constructed ridge before placing fill.
3. Track the ridge to compact it to the design cross section.
4. The outlet shall be located on an undisturbed area. Field spacing will be adjusted to use the most stable outlet areas. Outlet protection will be provided when natural areas are not adequate.
5. Vehicle crossing shall be stabilized with gravel. Exposed areas shall be immediately seeded and mulched.
6. Periodically inspect water bars for erosion damage and sediment. Check outlet areas and make repairs as needed to restore operation.

References and Acknowledgements

REFERENCES

Stormwater Management and Erosion and Sediment Control Handbook for Urban and Developing Areas in New Hampshire, August 1992.

New York Guidelines for Urban Erosion and Sediment Control, Third Printing, October 1991.

Vermont Handbook for Soil Erosion and Sediment Control on Construction Sites, Special Publication No. 3, Vermont Geological Survey, Department of Water Resources and Environmental Engineering, Agency of Environmental Conservation, Montpelier, VT 1987.

ACKNOWLEDGEMENTS

NHDOT Committee on the Erosion and Sediment and Water Quality Control Manual 1996:

William Lambert, P.E.	Donald Coleman, P.E.
James Kirouac, P.E.	Robert Decker
Mark Carlson	Nasser Yari, P.E.
Daniel Prehemo, P.E.	Michelle Juliano, P.E.
Marc Laurin	William Janelle, P.E.
Alan Cilley	Jeffrey Allbright, P.E.

Review and editing, Joanne McLaughlin, New Hampshire Coastal Program, Office of State Planning.
Graphic Design, Heather Spear, Office of State Planning.
Funding and review, New Hampshire Department of Environmental Services.

Notes

Notes

Notes