STANDARD NO. BR-R7M

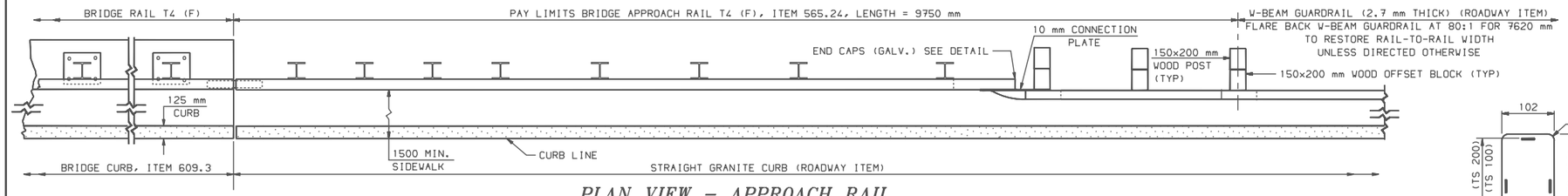

PLAN VIEW – APPROACH RAIL

SCALE: 1:25

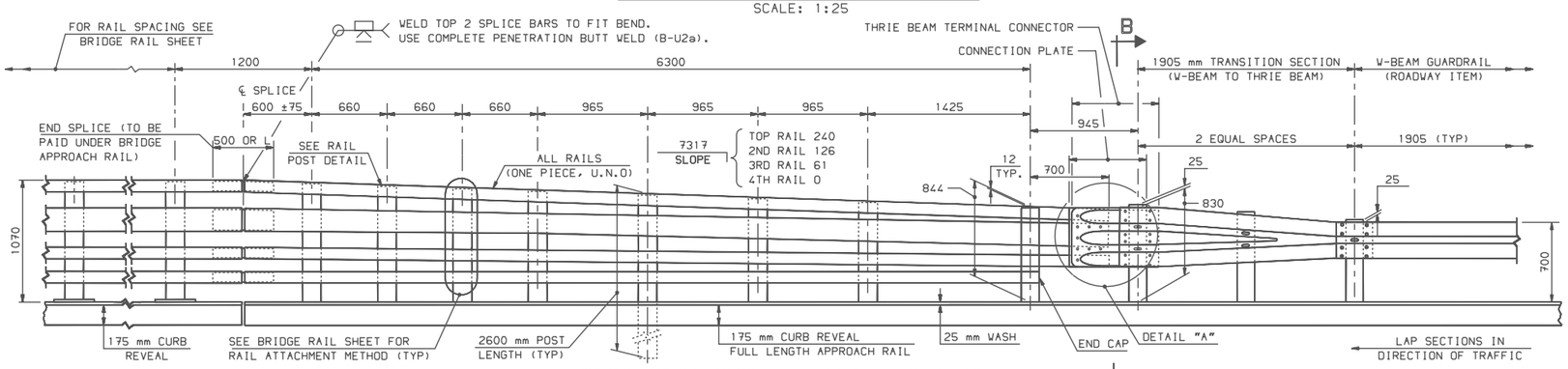

ELEVATION VIEW – APPROACH RAIL

SCALE: 1:25

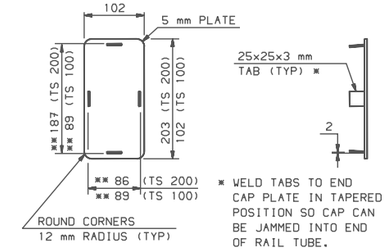

END CAP DETAIL

SCALE: 1:5

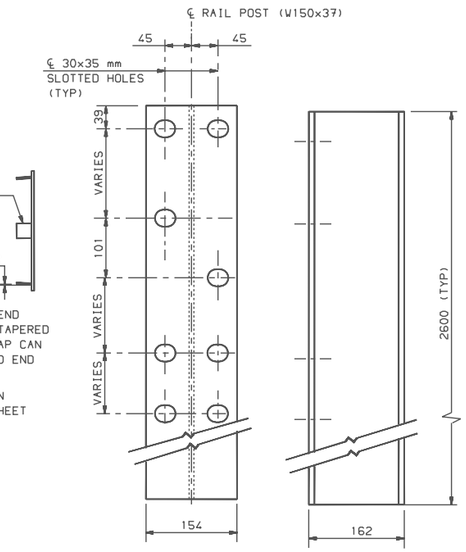

FRONT VIEW

SIDE VIEW

RAIL POST

SCALE: 1:5

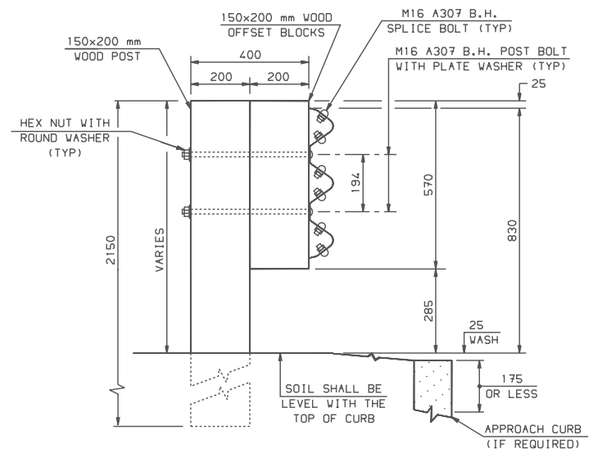

SECTION B–B (POST RAIL ASSEMBLY)

SCALE: 1:10

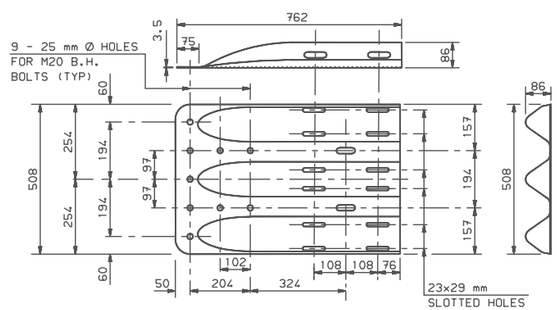

THRIE–BEAM TERMINAL CONNECTOR

SCALE: 1:10

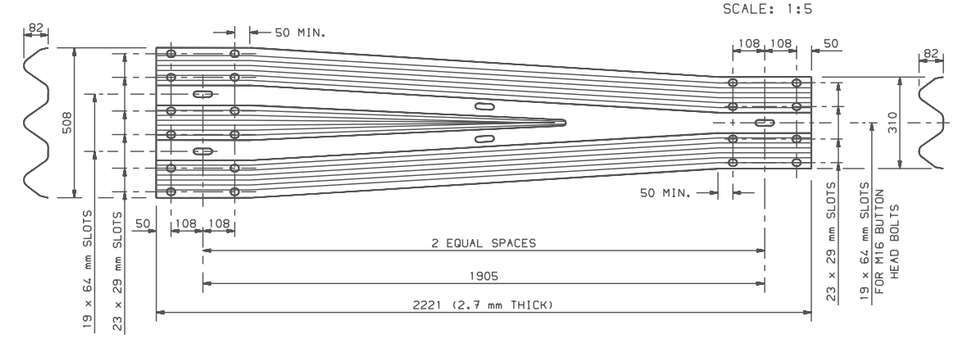

THRIE–BEAM TO W–BEAM TRANSITION SECTION

SCALE: 1:10

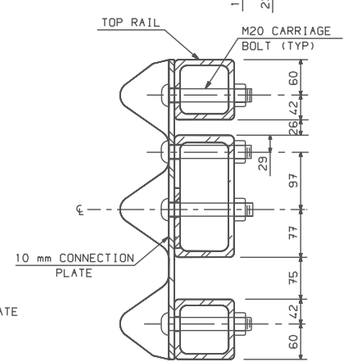

SECTION C–C (CONNECTION PLATE)

SCALE: 1:5

NOTES:

(1) ALL BRIDGE APPROACH RAIL MATERIALS, DIMENSIONS, SIZES, AND NOTES SHALL BE THE SAME AS THOSE OF THE BRIDGE RAIL, UNLESS OTHERWISE NOTED.

(2) CARRIAGE BOLTS SHALL BE ASTM A307, AND NUTS SHALL BE ASTM A563M GRADE A OR BETTER (GALVANIZED).

(3) THRIE-BEAM TERMINAL CONNECTOR AND THRIE-BEAM W-BEAM TRANSITION SECTION SHALL CONFORM TO AASHTO M180.

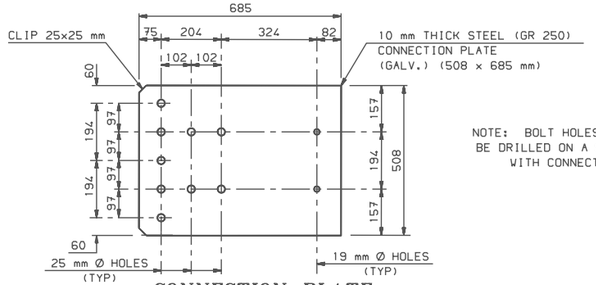

CONNECTION PLATE

SCALE: 1:10

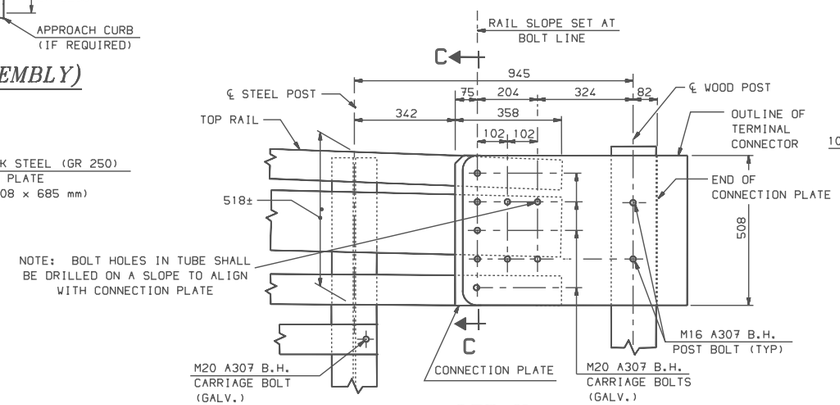

DETAIL A

SCALE: 1:10

THESE PLANS REDUCED APPROXIMATELY ½ SCALE

REVISION DATES
1/02/01

WINDOW NAME	*.FGB FILE NAME	SHEET SCALE
BR-R7M	BR-MSTNDS-NHBOOK	AS NOTED

STATE OF NEW HAMPSHIRE
DEPARTMENT OF TRANSPORTATION, CONCORD, N.H.

T4 STEEL BRIDGE APPROACH RAIL (PL2)

METRIC STANDARD PLANS

STANDARD NO. BR-R7M