STANDARD NO. BR-R5M

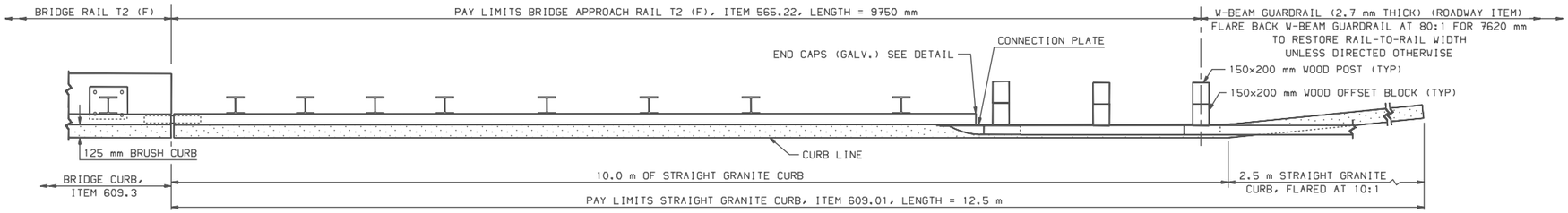

PLAN VIEW – APPROACH RAIL

SCALE: 1:25

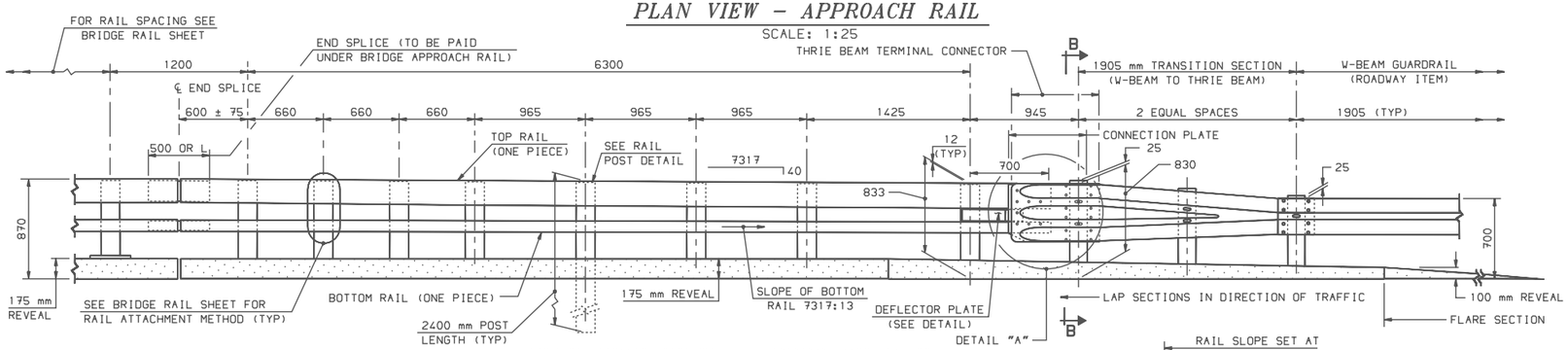

ELEVATION VIEW – APPROACH RAIL

SCALE: 1:25

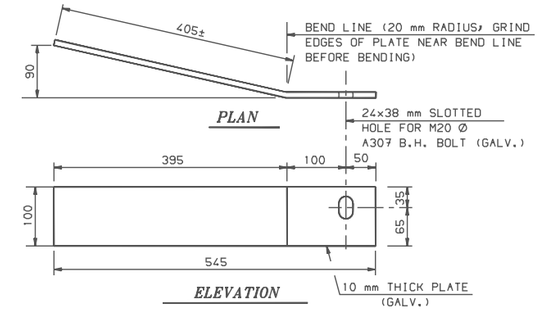

DEFLECTOR PLATE DETAILS

SCALE: 1:5

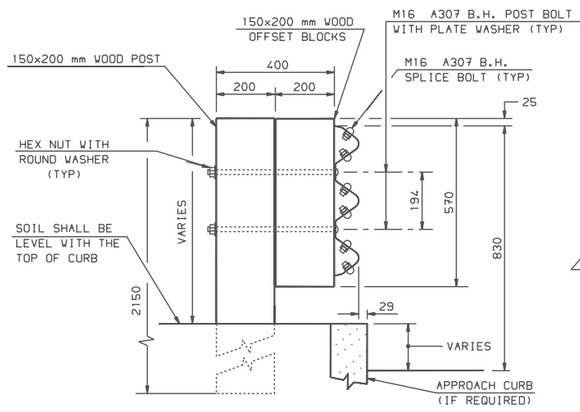

SECTION B–B (POST RAIL ASSEMBLY)

SCALE: 1:10

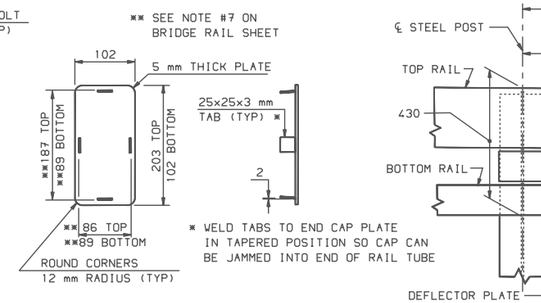

END CAP DETAIL

SCALE: 1:5

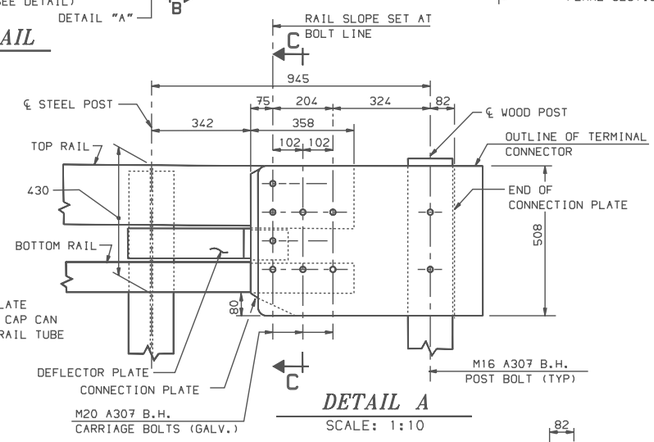

DETAIL A

SCALE: 1:10

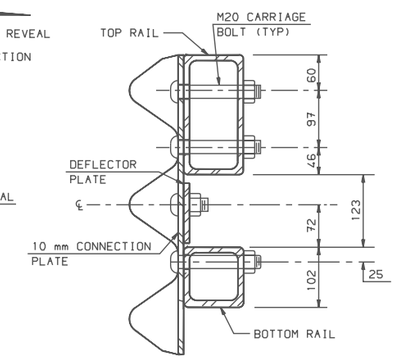

SECTION C–C (CONNECTION PLATE)

SCALE: 1:5

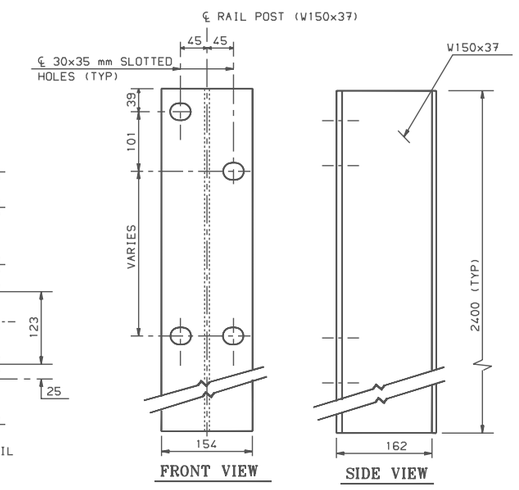

RAIL POST

SCALE: 1:5

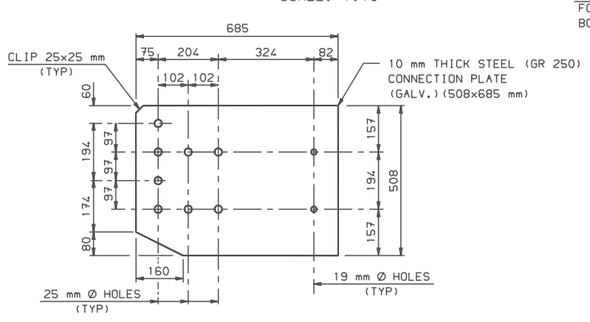

CONNECTION PLATE

SCALE: 1:10

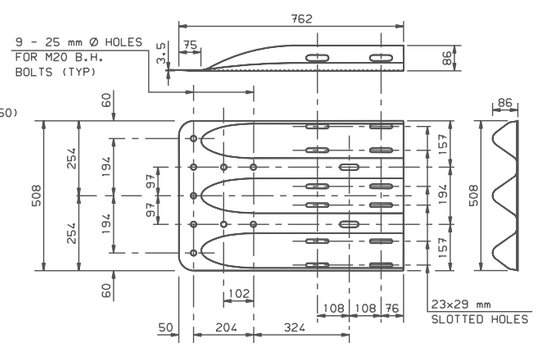

THRIE-BEAM TERMINAL CONNECTOR

SCALE: 1:10

NOTES:

(1) ALL BRIDGE APPROACH RAIL MATERIALS, DIMENSIONS, SIZES, AND NOTES SHALL BE THE SAME AS THOSE OF THE BRIDGE RAIL, UNLESS OTHERWISE NOTED.

(2) CARRIAGE BOLTS SHALL BE ASTM A307, AND NUTS SHALL BE ASTM A563M GRADE A OR BETTER (GALVANIZED).

(3) THRIE-BEAM TERMINAL CONNECTOR AND THRIE-BEAM TO W-BEAM TRANSITION SECTION SHALL CONFORM TO AASHTO M180.

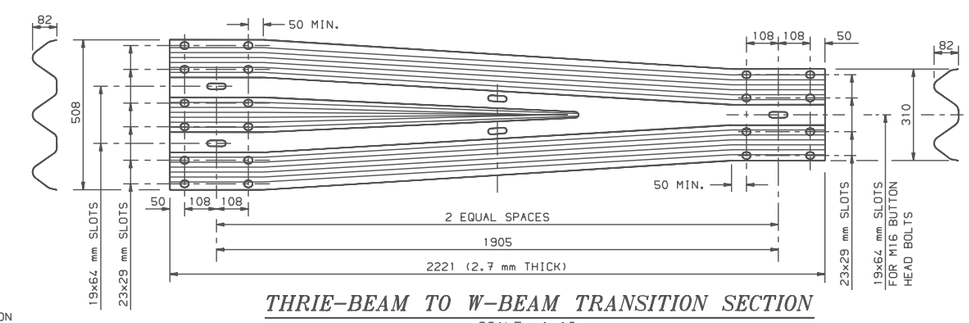

THRIE-BEAM TO W-BEAM TRANSITION SECTION

SCALE: 1:10

THESE PLANS REDUCED APPROXIMATELY ½ SCALE

REVISION DATES
1/02/01

WINDOW NAME	*.FGB FILE NAME	SHEET SCALE
BR-R5M	BR-MSTNDS-NHBOOK	AS NOTED

STATE OF NEW HAMPSHIRE
DEPARTMENT OF TRANSPORTATION, CONCORD, N.H.

T2 STEEL BRIDGE APPROACH RAIL (PL2)

METRIC STANDARD PLANS

STANDARD NO. BR-R5M