STANDARD NO. BR-R5

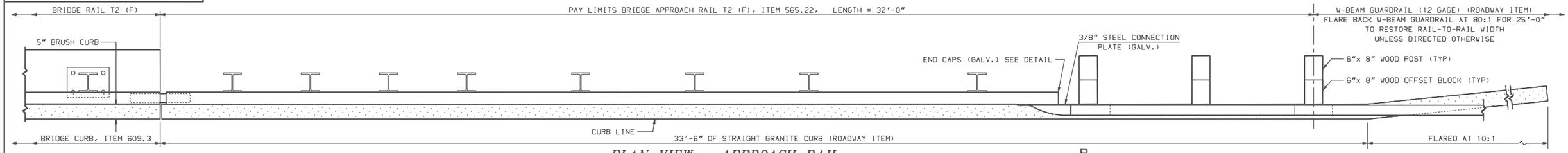

PLAN VIEW – APPROACH RAIL

SCALE: 3/4" = 1'-0"

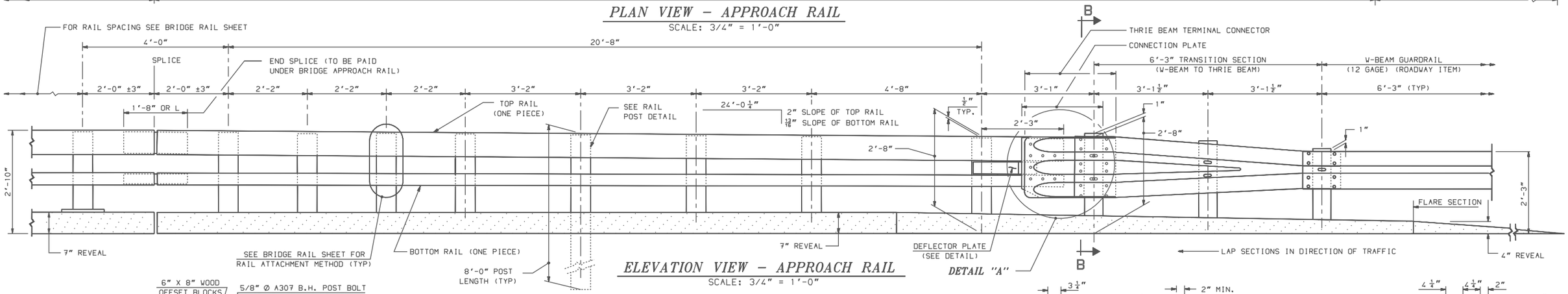

ELEVATION VIEW – APPROACH RAIL

SCALE: 3/4" = 1'-0"

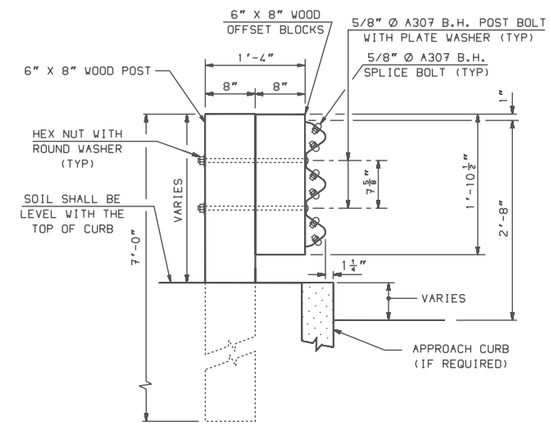

SECTION B–B (POST RAIL ASSEMBLY)

SCALE 1" = 1'-0"

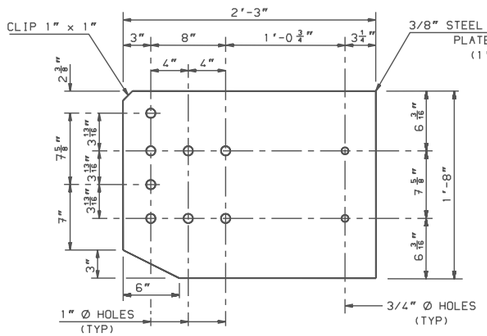

CONNECTION PLATE

SCALE: 1 1/2" = 1'-0"

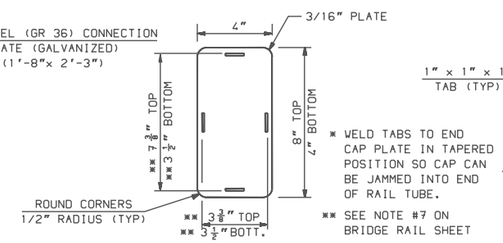

END CAP DETAIL

SCALE: 1 1/2" = 1'-0"

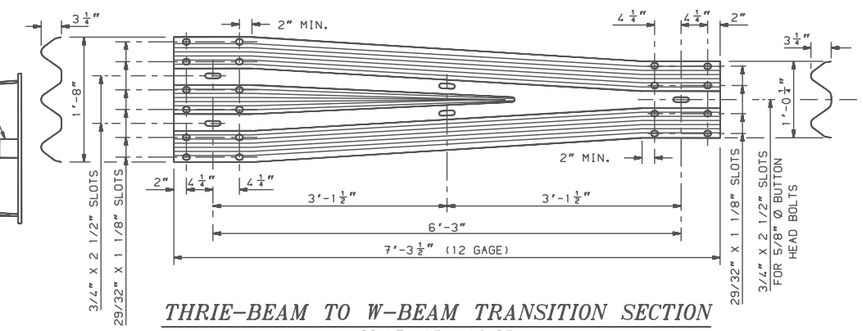

THRIE–BEAM TO W–BEAM TRANSITION SECTION

SCALE: 1" = 1'-0"

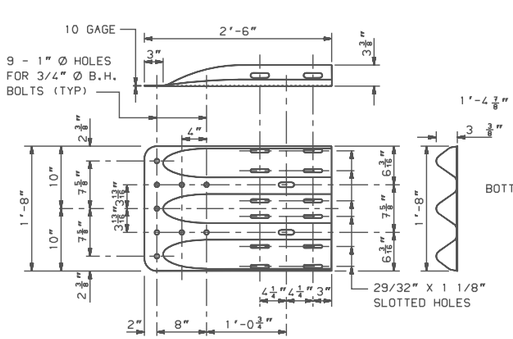

THRIE–BEAM TERMINAL CONNECTOR

SCALE: 1" = 1'-0"

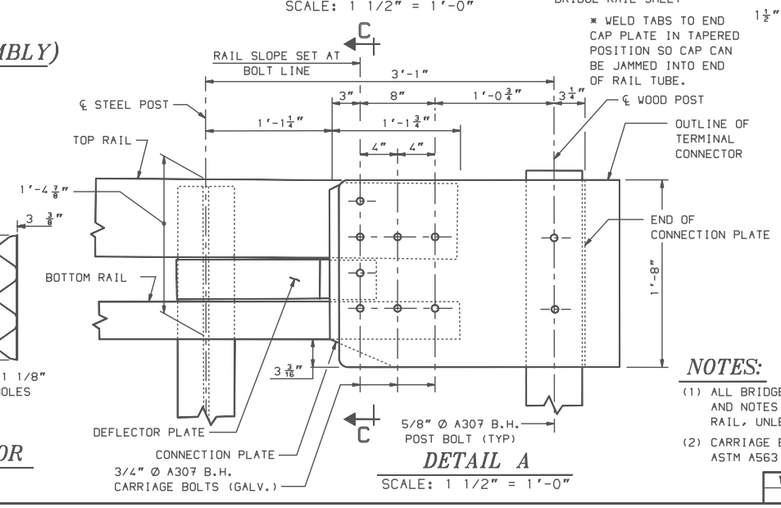

DETAIL A

SCALE: 1 1/2" = 1'-0"

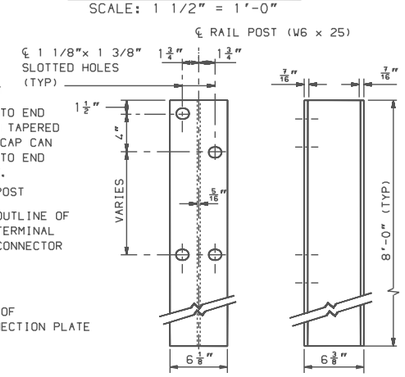

RAIL POST

SCALE: 1 1/2" = 1'-0"

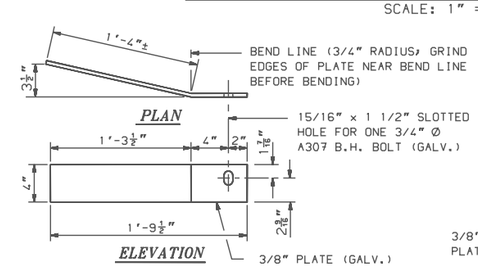

DEFLECTOR PLATE DETAIL

SCALE: 1 1/2" = 1'-0"

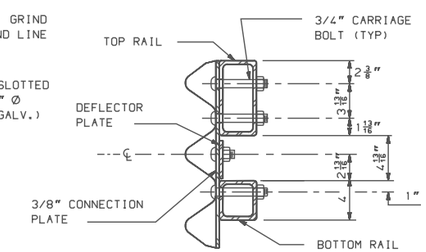

SECTION C–C (CONNECTION PLATE)

SCALE: 1 1/2" = 1"-0"

THESE PLANS REDUCED APPROXIMATELY ½ SCALE

NOTES:

(1) ALL BRIDGE APPROACH RAIL MATERIALS, DIMENSIONS, SIZES, AND NOTES SHALL BE THE SAME AS THOSE OF THE BRIDGE RAIL, UNLESS OTHERWISE NOTED.

(2) CARRIAGE BOLTS SHALL BE ASTM A307, AND NUTS SHALL BE ASTM A563 GRADE A OR BETTER (GALVANIZED).

REVISION DATES
1/2/01

WINDOW NAME	*.FGB FILE NAME	SHEET SCALE
BR-R5	BR-STNDS-NHBOOK	AS NOTED

STATE OF NEW HAMPSHIRE
DEPARTMENT OF TRANSPORTATION, CONCORD, N.H.

T2 STEEL BRIDGE APPROACH RAIL (PL2)

STANDARD PLANS

STANDARD NO. BR-R5