STANDARD NO. BR-R4

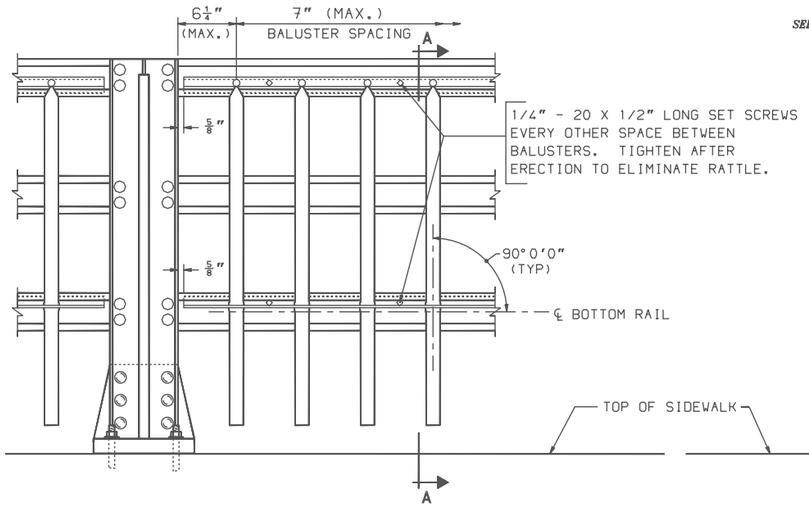

BACK ELEVATION OF POST

SCALE : 1 1/2"= 1'-0"

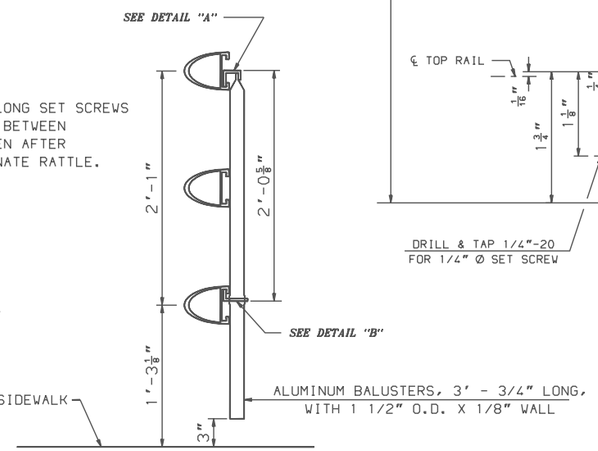

SECTION A-A

SCALE : 1 1/2"= 1'-0"

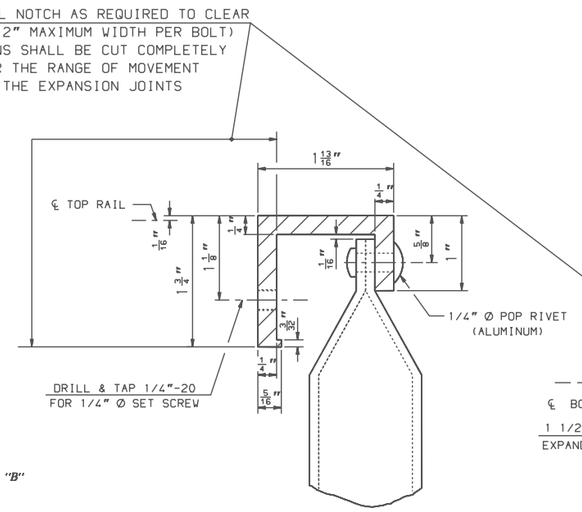

DETAIL "A"

FULL SIZE

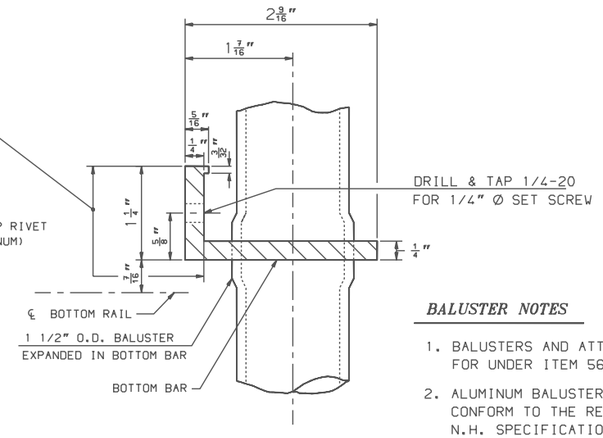

DETAIL "B"

FULL SIZE

BALUSTER NOTES

1. BALUSTERS AND ATTACHMENTS SHALL BE PAID FOR UNDER ITEM 563.73.
2. ALUMINUM BALUSTERS AND ATTACHMENTS SHALL CONFORM TO THE REQUIREMENTS SPECIFIED IN N.H. SPECIFICATION 563.2.6.
3. PAY LIMITS FOR BALUSTERS SHALL BE AS SHOWN ON THE PLANS.

THESE PLANS REDUCED APPROXIMATELY ½ SCALE

REVISION DATES
1/2/01

WINDOW NAME	*.FGB FILE NAME	SHEET SCALE
BR-R4	BR-STNDS-NHBOOK	AS NOTED

STATE OF NEW HAMPSHIRE
DEPARTMENT OF TRANSPORTATION, CONCORD, N.H.

ALUMINUM BALUSTER DETAILS

STANDARD PLANS

STANDARD NO. BR-R4