STANDARD NO. BR-R2M

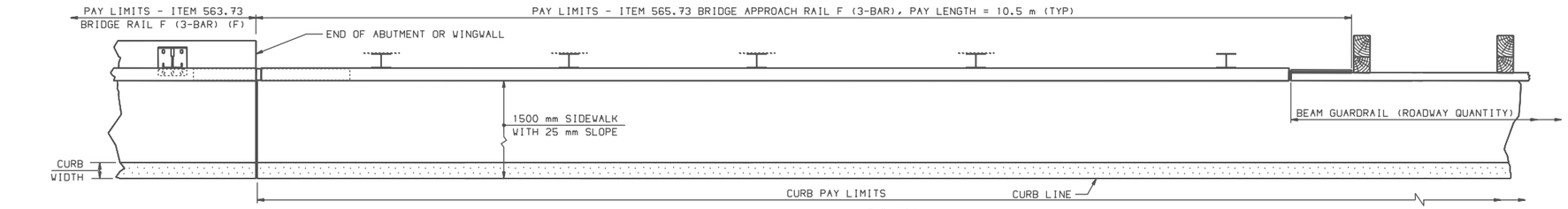

PLAN
SCALE: 1:25

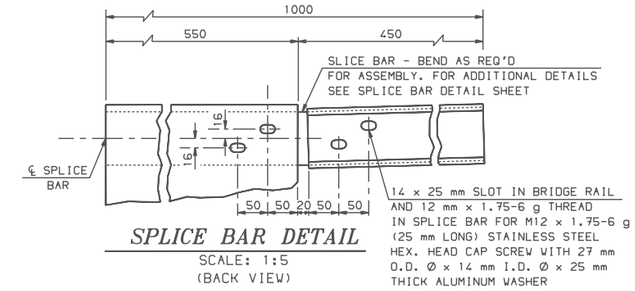

SPLICE BAR DETAIL
SCALE: 1:5
(BACK VIEW)

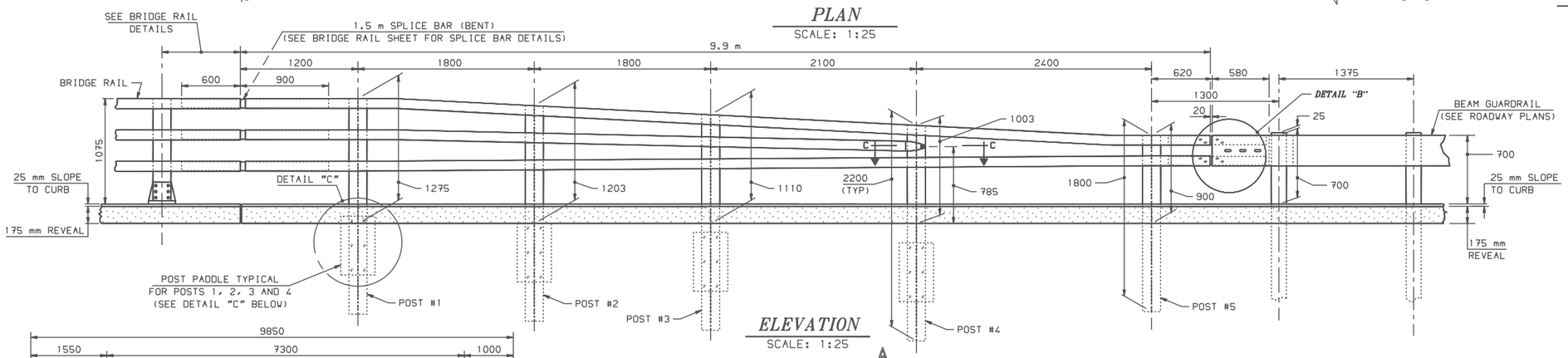

ELEVATION
SCALE: 1:25

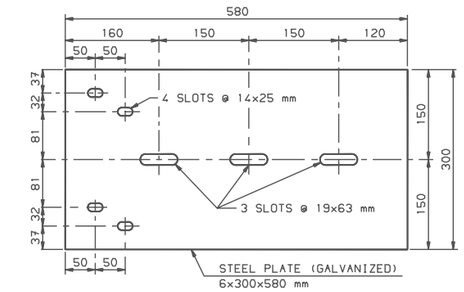

BACK-UP PLATE DETAIL
SCALE: 1:5

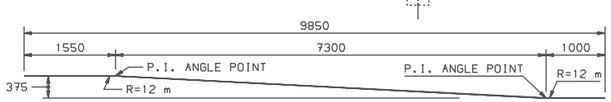

BENDING DIAGRAM - TOP RAIL
SCALE: 1:50

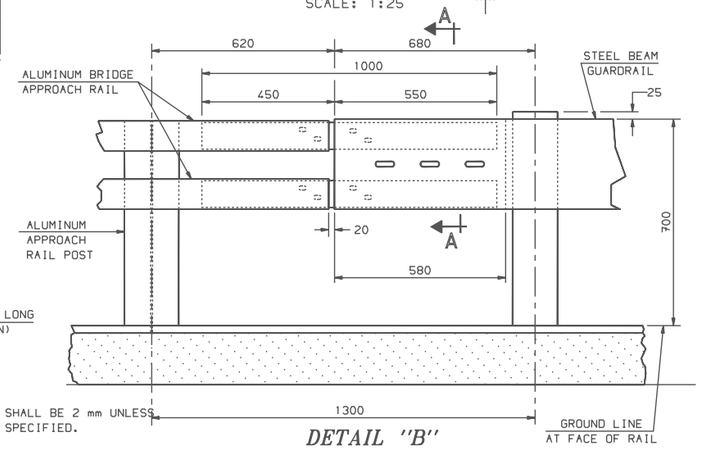

DETAIL "B"
SCALE: 1:10

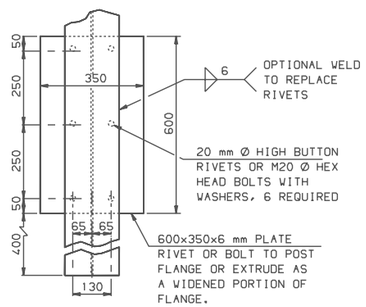

DETAIL "C"
SCALE: 1:10

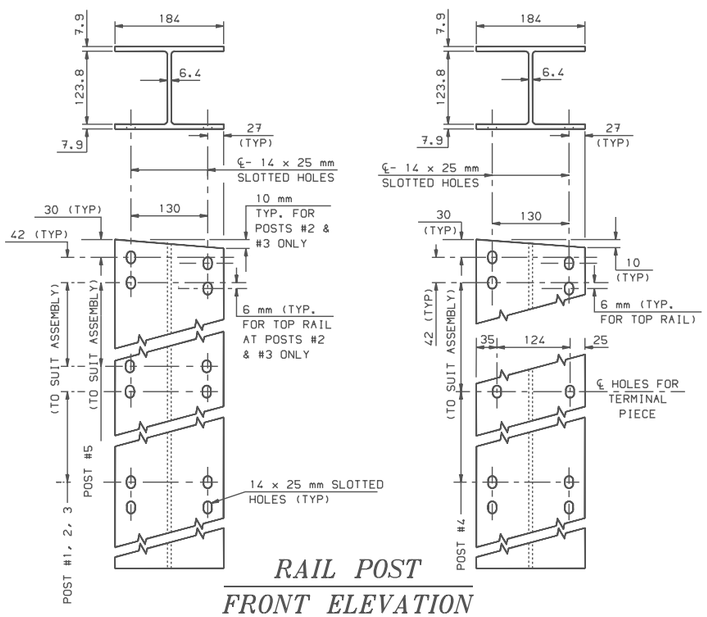

RAIL POST
FRONT ELEVATION
SCALE: 1:5

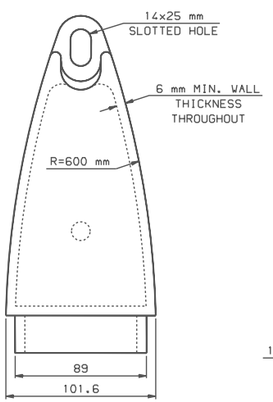

TOP VIEW
SCALE: 1:2

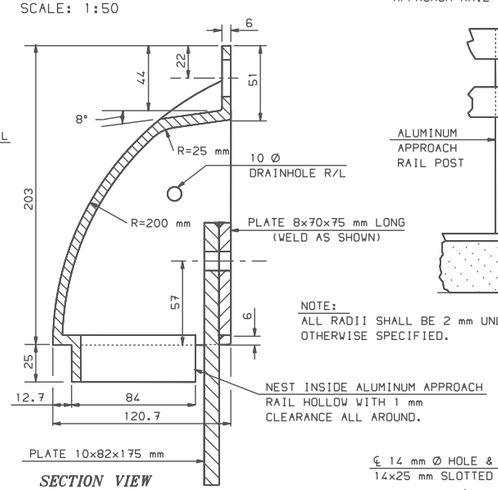

SECTION VIEW
SCALE: 1:2

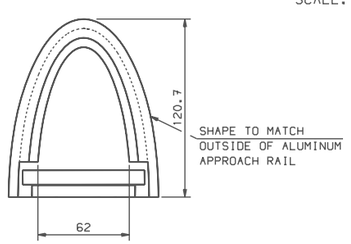

END VIEW
SCALE: 1:2

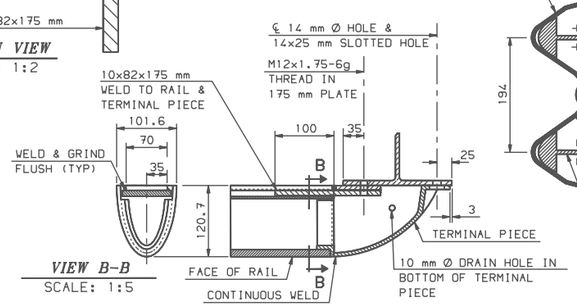

VIEW B-B
SCALE: 1:5

TERMINAL PIECE DETAILS

SECTION C-C
SCALE: 1:5

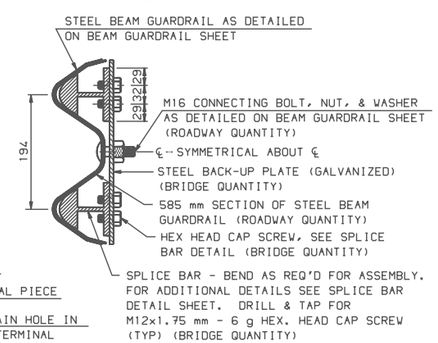

SECTION A-A
SCALE: 1:5

NOTE:
ALL DIMENSIONS ON THIS SHEET (INCLUDING DECIMALS) ARE IN MILLIMETERS EXCEPT WHEN DENOTED WITH m.

THESE PLANS REDUCED APPROXIMATELY ½ SCALE

REVISION DATES
1/02/01

WINDOW NAME	*.FGB FILE NAME	SHEET SCALE
BR-R2M	BR-MSTNDS-NHBOOK	AS NOTED

USE WHEN SIDEWALK CONTINUES BEYOND END OF RAIL

STATE OF NEW HAMPSHIRE
DEPARTMENT OF TRANSPORTATION, CONCORD, N.H.

APPROACH RAIL DETAILS (3-BAR ALUMINUM)

METRIC STANDARD PLANS

STANDARD NO. BR-R2M