STANDARD NO. BR-R2

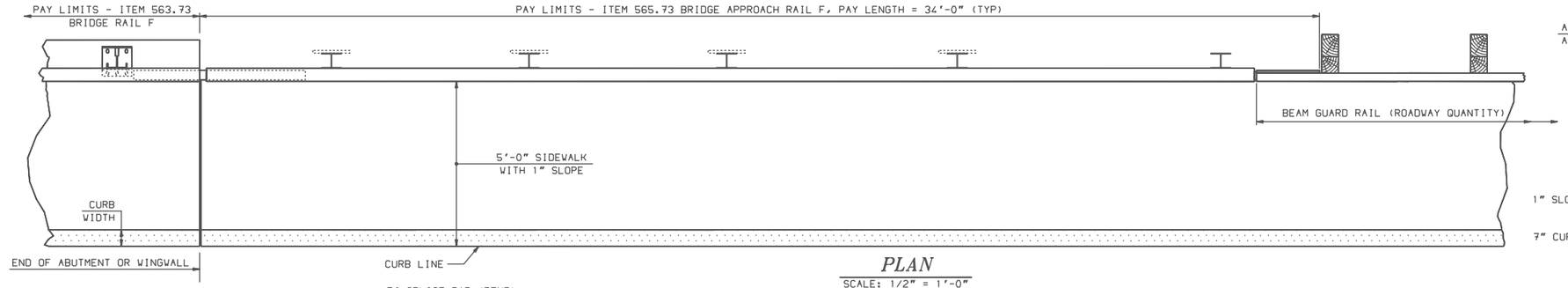

PLAN
SCALE: 1/2" = 1'-0"

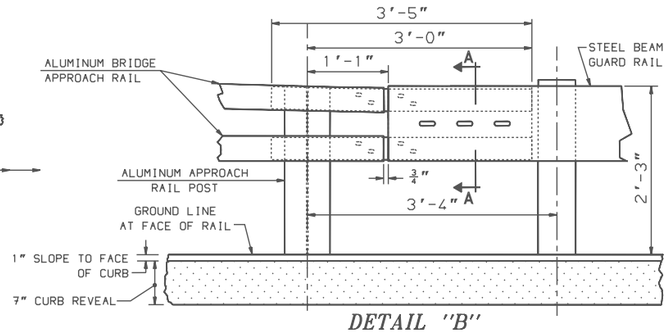

DETAIL "B"
SCALE: 1" = 1'-0"

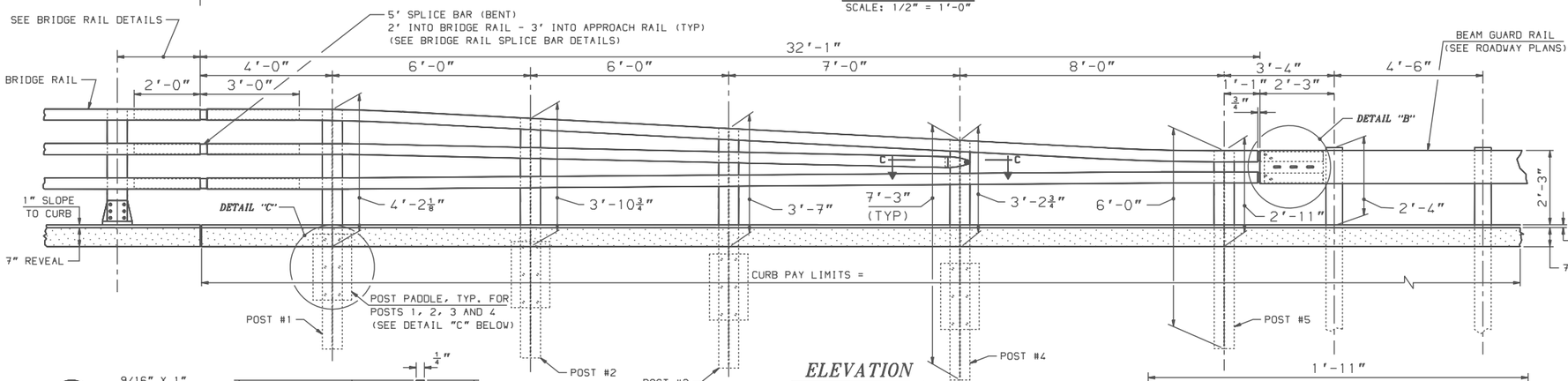

ELEVATION
SCALE: 1/2" = 1'-0"

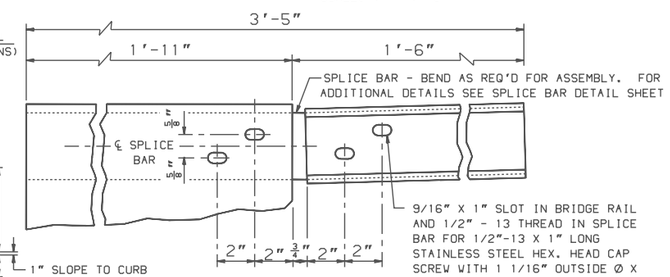

SPLICE BAR DETAIL
SCALE: 3" = 1'-0"
(BACK VIEW)

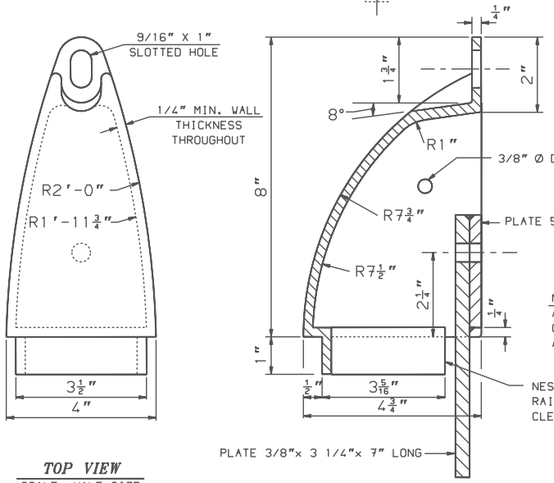

NOTE:
ALL RADII SHALL BE 1/16" UNLESS OTHERWISE SPECIFIED.
ALUM. A356-T6 ASTM B-108

TOP VIEW
SCALE: HALF SIZE

SECTION VIEW
SCALE: HALF SIZE

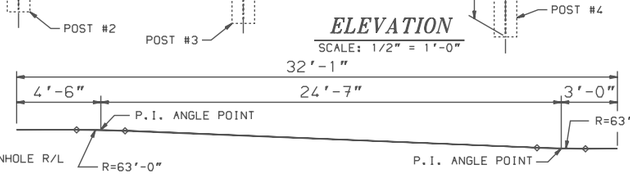

BENDING DIAGRAM - TOP RAIL
1/4"=1'-0"

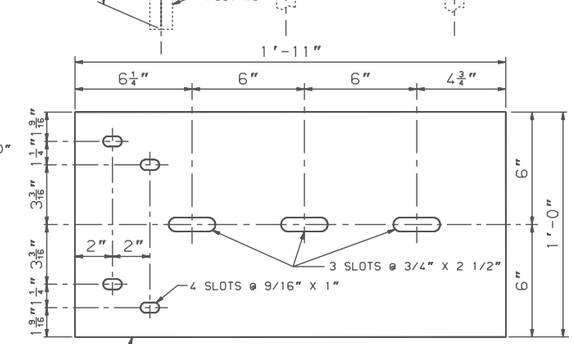

BACK-UP PLATE DETAIL
SCALE: 3" = 1'-0"

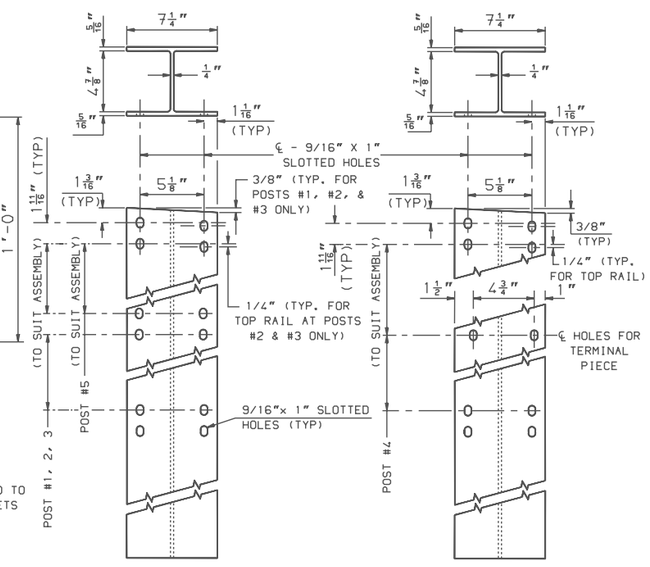

RAIL POST - FRONT ELEVATION
SCALE: 2" = 1'-0"

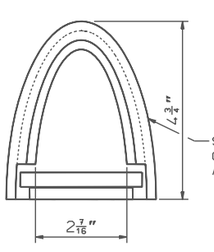

END VIEW
SCALE: HALF SIZE

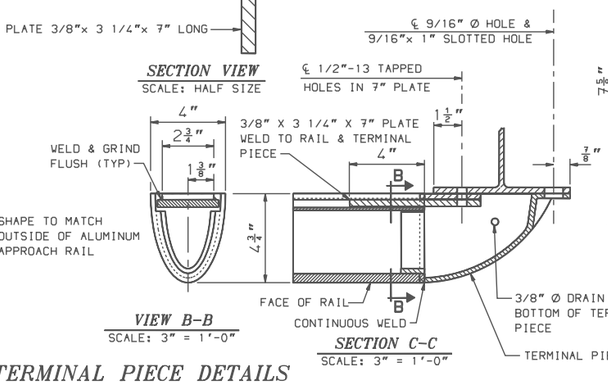

VIEW B-B
SCALE: 3" = 1'-0"

SECTION C-C
SCALE: 3" = 1'-0"

TERMINAL PIECE DETAILS

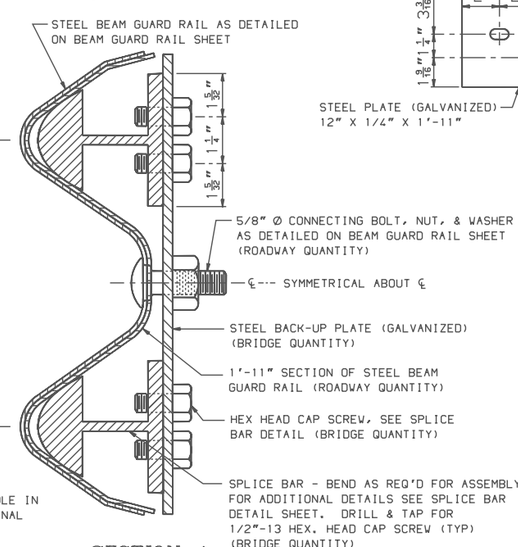

SECTION A-A
HALF SCALE

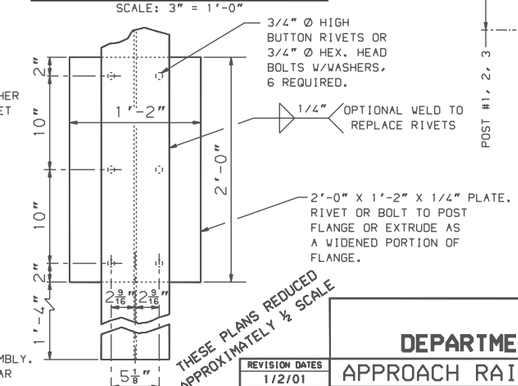

DETAIL "C"
SCALE: 1 1/2" = 1'-0"

THESE PLANS REDUCED APPROXIMATELY ½ SCALE

REVISION DATES
1/2/01

WINDOW NAME	*.FGB FILE NAME	SHEET SCALE
BR-R2	BR-STNDS-NHBOOK	AS NOTED

STATE OF NEW HAMPSHIRE
DEPARTMENT OF TRANSPORTATION, CONCORD, N.H.

APPROACH RAIL DETAILS (3-BAR ALUMINUM)

STANDARD PLANS

STANDARD NO.
BR-R2