# STANDARD NO. BR-R14

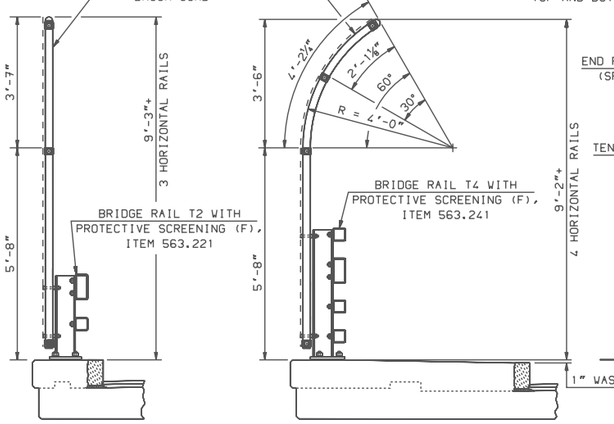


*STRAIGHT SCREEN WITH BRUSH CURB*

*SECTION A–A*
SCALE: 1/2" = 1'-0"

*CURVED SCREEN WITH SIDEWALK*

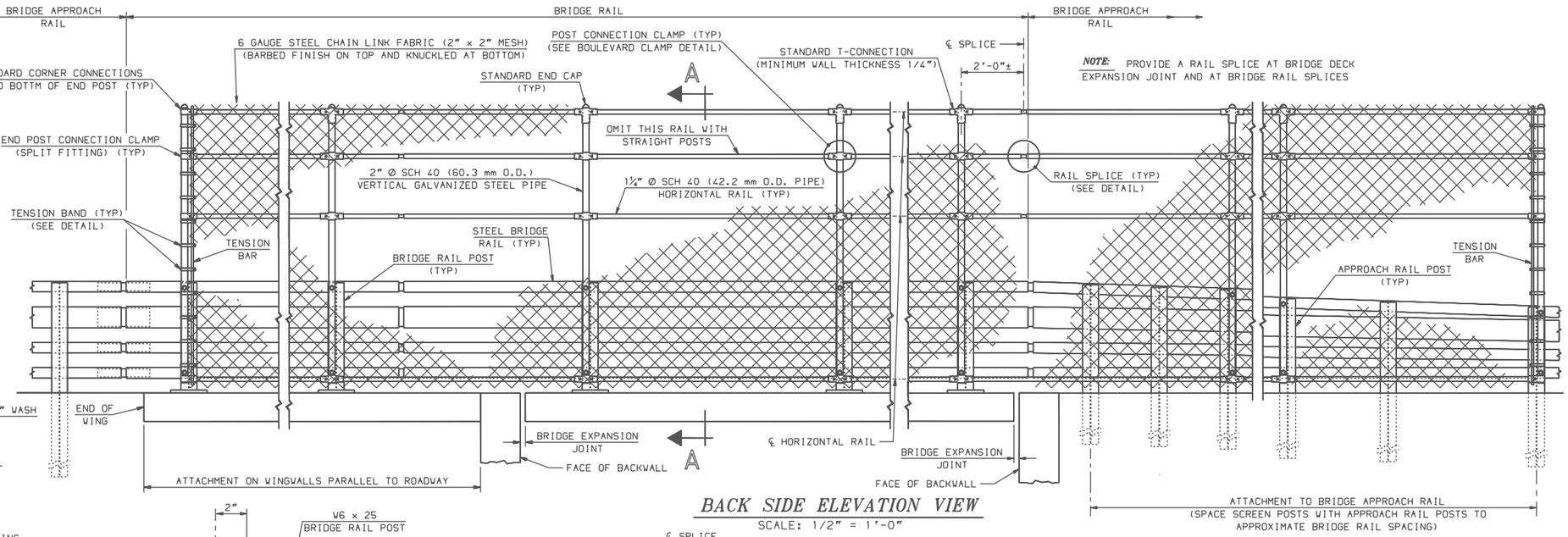


*BACK SIDE ELEVATION VIEW*
SCALE: 1/2" = 1'-0"

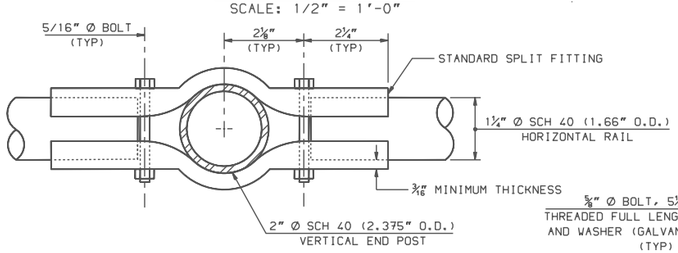


*BOULEVARD CLAMP DETAIL*
SCALE: 6" = 1'-0"

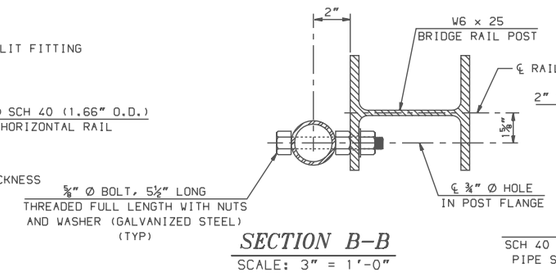


*SECTION B–B*
SCALE: 3" = 1'-0"

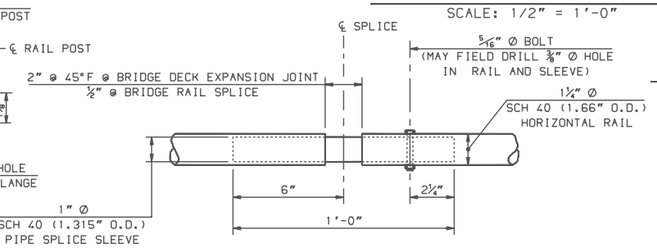


*RAIL SPLICE DETAIL*
SCALE: 3" = 1'-0"

## NOTES:

1. SCREENING, POSTS, RAILS, AND CONNECTIONS SHALL BE PAID UNDER ITEM 563.221 (OR 563.241), BRIDGE RAIL T2 (OR T4) WITH PROTECTIVE SCREENING (F).
2. SEE BRIDGE RAIL AND BRIDGE APPROACH RAIL SHEETS FOR ADDITIONAL DETAILS.
3. PROVIDE A RAIL SPLICE AT THE BRIDGE DECK EXPANSION JOINT AND AT BRIDGE RAIL SPLICES.
4. SPACE SCREEN POSTS WITH BRIDGE RAIL POSTS. USE 9 GAUGE TIES @ 6" O.C. TO BOTTOM RAIL. SPACE TIES @ 12" O.C. TO ALL POSTS AND OTHER RAILS.

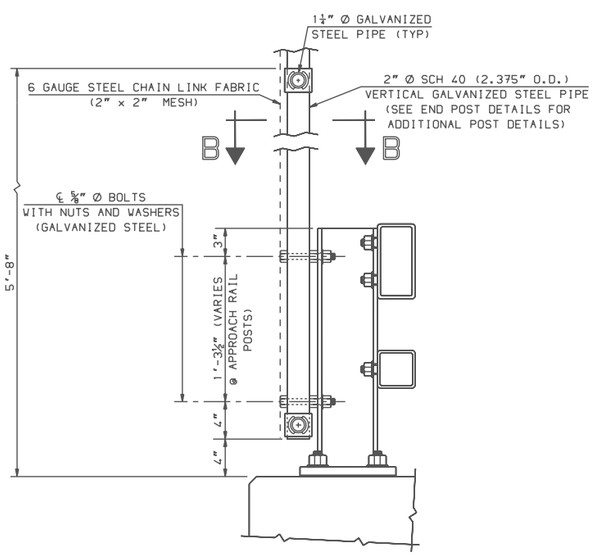


*RAIL POST CONNECTION (BRUSH CURB)*
SCALE: 1 1/2" = 1'-0"

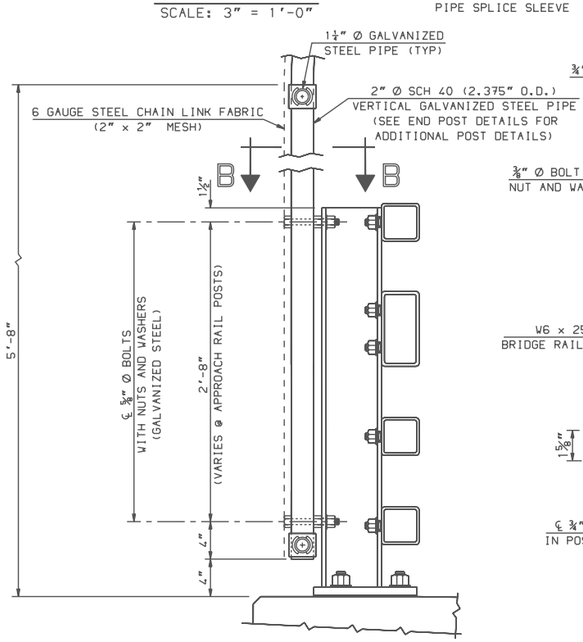


*RAIL POST CONNECTION (SIDEWALK)*
SCALE: 1 1/2" = 1'-0"

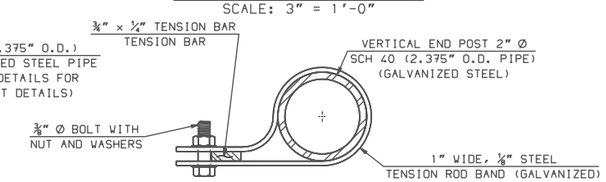


*TENSION BAND DETAIL*
SCALE: 6" = 1'-0"

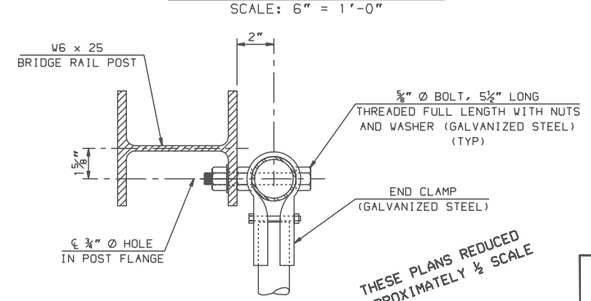


THESE PLANS REDUCED APPROXIMATELY ½ SCALE

*PLAN VIEW AT END POST*
SCALE: 3" = 1'-0"

## GENERAL NOTES

1. THREADS OF BOLTS TO BE ⅝" - 11 UNC.
2. 1¼" Ø PIPE MAY BE FIELD CUT (SAWN) TO FIT POST SPACING AND EDGES SHALL BE TOUCHED UP WITH GALVANIZING.
3. ALL STEEL COMPONENTS AND CONNECTION PLATES SHALL BE GALVANIZED AFTER FABRICATION. ALL GALVANIZING SHALL CONFORM TO THE REQUIREMENTS OF AASHTO M181 WITH HARDWARE AND FITTINGS CONFORMING TO REQUIREMENTS OF AASHTO M111 OR AASHTO M232 WHICHEVER IS APPLICABLE. ALL BOLTS, NUTS AND WASHERS SHALL BE EITHER HOT-DIP GALVANIZED IN ACCORDANCE WITH THE ABOVE AASHTO REQUIREMENTS OR MECHANICALLY GALVANIZED IN ACCORDANCE WITH AASHTO M298, CLASS 50.
4. CHAIN LINK FABRIC TO BE BARBED ON THE TOP AND KNUCKLED AT THE BOTTOM.
5. ALL BOLTS, NUTS AND WASHERS SHALL CONFORM TO THE SPECIFICATION FOR ASTM A307.
6. ALL STEEL PLATES SHALL CONFORM TO THE SPECIFICATION FOR AASHTO M270 GRADE 36 OR ASTM A36.
7. GALVANIZED CHAIN-LINK FABRIC SHALL BE TYPE I (ZINC-COATED) CLASS D AS SPECIFIED IN AASHTO M181.
8. ALL GALVANIZED STEEL PIPE SHALL BE ASTM A53 (ERW) SCH 40 (NOMINAL PIPE SIZES SHOWN).

| WINDOW NAME | *.FGB FILE NAME | SHEET SCALE |
|---|---|---|
| BR-R14 | BR-STNDS-NHBOOK | AS NOTED |

| REVISION DATES |
|---|
| 1/2/01 |

STATE OF NEW HAMPSHIRE
DEPARTMENT OF TRANSPORTATION, CONCORD, N.H.

PROTECTIVE SCREEN WITH T2 OR T4 STEEL RAIL

**STANDARD PLANS**

STANDARD NO. BR-R14