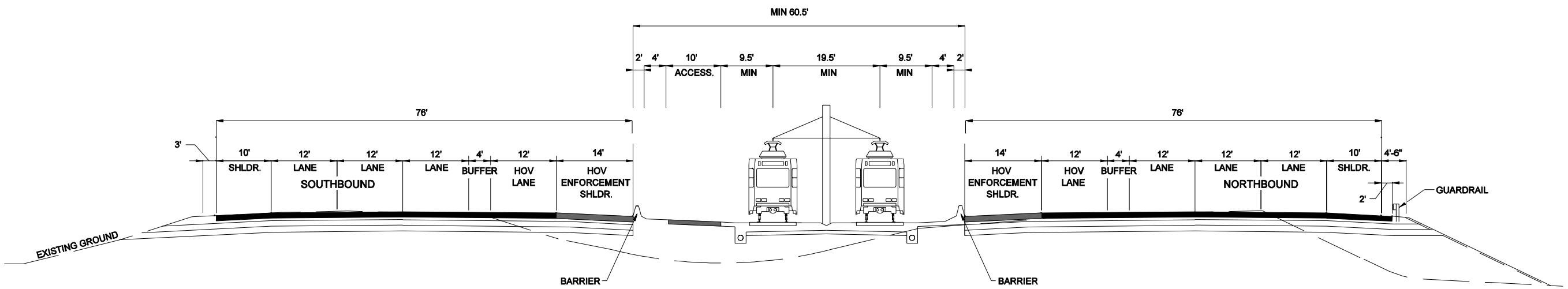

Vanasse Hangen Brustlin, Inc.

Figure 4.4-2
Typical Section of Improvement
Closed Drainage