ARCHITECTURAL HISTORY HISTORIC PRESERVATION

JAMES L. GARVIN
FARRINGTON HOUSE

30 South Main Street · Building 1, Suite 201 · Concord, New Hampshire, 03301
james@jamesgarvin.net http://www.james-garvin.com

# REPORT ON THE JOHN GREELEY HOUSE
## 3 SHAKER HILL ROAD
## ENFIELD VILLAGE, NEW HAMPSHIRE

**JAMES L. GARVIN**
**MAY 26, 2012**
**REVISED MAY 31, 2012**

*Summary:* The John Greeley House is a contributing resource in the Enfield Village National Register Historic District, standing at a key intersection adjacent to the Mascoma River and visible from most highway approaches to the center of the village. The Greeley House imparts a domestic character to a roadway junction that was altered in character and given an open aspect through the removal of several buildings during the twentieth century. The house thus preserves a valuable remnant of a visual character that is seen in the historic view at the bottom of page 2 of this report, but has otherwise been lost at this location. Apparently assuming its present form around 1835, the house is also a good example of a gable-front dwelling, a house type that is frequently encountered in this region.

As seen today, the house is composed of three distinct framing units. The earliest, which composes the rear (northeast) portion of the main dwelling, is a structure of plank-wall construction, reportedly dating from 1823 and representing one of the earliest surviving buildings in the village. The next framing unit, placed in front of the plank-wall structure and indistinguishable from it on the exterior, has a heavy, sawn, braced frame and a roof of widely-spaced common rafters that covers both the framed unit and the earlier plank-walled structure; this roof is oriented to impart a broad-gabled form to the dwelling, with the façade of the house facing southwest along Main Street. The third unit, composing the rear wing of the house, is centered against the rear (northeast) elevation of the plank-walled section of the main dwelling and provides a kitchen for the house. It appears to have a sawn, braced frame and has a roof of widely-spaced rafters, very similar to the frame of the front section of the house.

This report is based on a brief inspection of the Greeley House on the morning of May 24, 2012. Present at the inspection were Douglas A. Smith and Harry Trumbull of the Enfield Village Association (EVA). The purpose of the inspection was to develop a preliminary determination of the evolution of the house and to provide preliminary guidelines for the rehabilitation of the property.

*History of the property, as known:* The National Register form for Enfield Village Historic District states that

> This is one of the oldest houses in town. It is reportedly a "plank house," built in the early 1800s for John Greeley (Enfield Bicentennial 1961). The property was later owned by the Shakers. It was the house of a miller who ran the Shaker gristmill for them. . . . In the 1880s, George W. Burnham (born 1832), a butcher, lived here and purchased the house from the Shakers. Burnham lived here into the 1910s (Hurd [Atlas] 1892; Directory 1907, 1914). This house contained the telephone exchange for many years from the 1920s through the 1960s (Sanborn [Fire Insurance Maps] 1923, 1948). The house was owned at that time by Herbert Walbridge. He was the postmaster and had a large family with his wife, Jessie (Census 1930).

More specific information became available when the current owner of the property, Timothy Lord, found a wooden board inscribed in pencil with the following history:

> This house was built in 1823 by David Greely. Sold to the Shakers about 1835 and an addition built on to it. Sold to G. W. Burnham May 7, 1889. Thoroughly repaired by G. W. Burnham in April & May 1892 and raised 1 foot. G. W. Burnham.

Today, the façade of the house retains its general appearance from the nineteenth century, altered by the addition of a side porch between 1923 and 1935 and by the recent closure of a pair of front windows. The rear (northeast elevation) of the house has a low, one-story wing centered on that elevation. As shown below, the wing is relatively early, although its current placement also dates from a remodeling between 1923 and 1935, when a second considerable investment in modernizing the house took place.

*Above, left: Present front (southwest) and side elevations.*

*Above, right: Present rear elevation.*

*Left: Image from a post card of c. 1910, showing the location of the wing flush with the side wall of the house, and attached two-story barn.*

The relationship between the main house and the wing and former barn, suggested indistinctly in the early twentieth-century post card shown above, is verified by available Sanborn fire insurance maps, dating between 1893 and 1923.

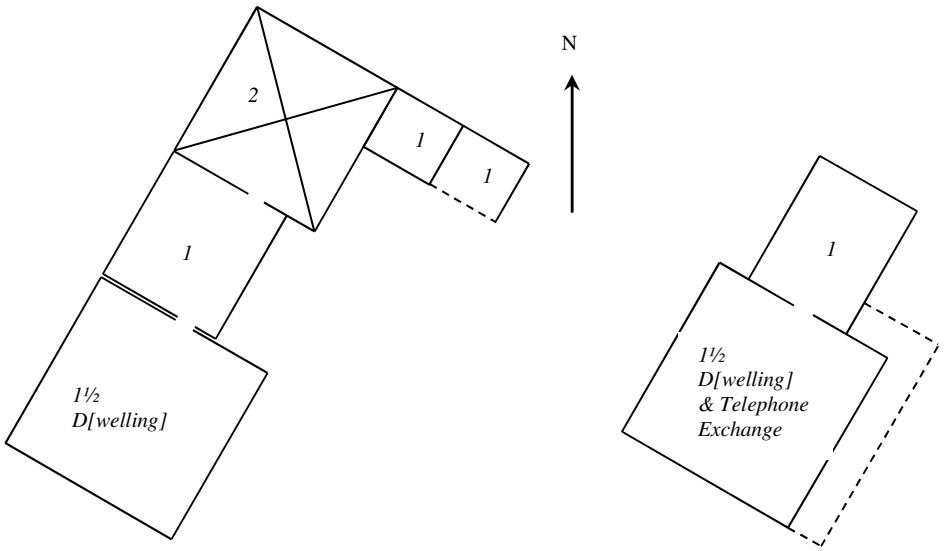


*Above, left: Depiction of the Greeley House on Sanborn Fire Insurance Maps, 1893 through 1923 (with minor variations).*

*Above, right: Depiction of the Greeley House on Sanborn Fire Insurance Map, 1923, updated to 1935.*

The depictions of the house on the maps from 1893 through 1923 suggest that the main dwelling and the one-story rear ell were not firmly attached to one another. There may have been a small gap between the two structures.

*Evolution of the Greeley House, based on physical evidence; original construction:* Although modern materials obscure most structural details of the Greeley House, enough removal has occurred to permit a physical distinction between the front and rear sections of the body of the main house. As noted in the fire insurance map detail reproduced above, the wing, though dating from the nineteenth century, was relocated and placed in its current relationship to the main dwelling between 1923 and 1935.

The rear portion of the Greeley House is a plank-walled building. Such houses appear in many variations throughout the northeastern United States, their precise form varying with their date and their location. In all of them, however, the wall studs and their horizontal one-inch sheathing are omitted from the walls. In the place of studs and sheathing, the frame is clad with thick, sawn, vertical planks that extend from sill to plate. The planks bear some or all of the stresses found in any exterior wall, and also hold the frames of windows and doors, taking the place of the studs that usually define wall openings. The planks constitute the principal wall fabric, having clapboards applied directly to their outer surfaces and lath and plaster applied directly to their inner faces, as shown in the drawing on the following page. In some cases, there is no separate frame with posts; the planks alone form the walls.

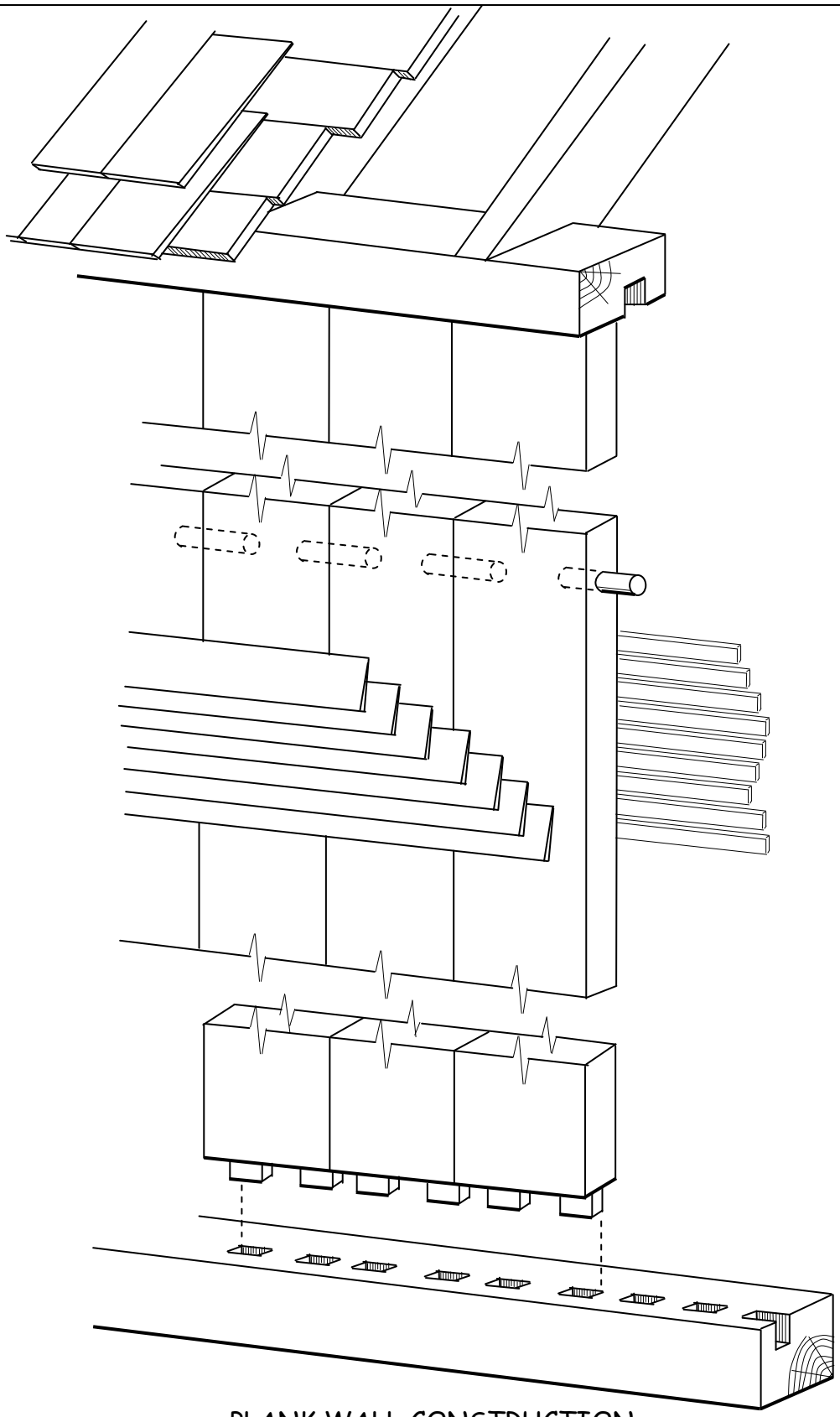

PLANK WALL CONSTRUCTION

Because the plank-wall construction is currently visible only were a partition has been partially removed between a front and a rear room on the southeastern side of the main house, it is presently impossible to know whether the construction of the older portion of the Greeley House includes corner posts and pins or dowels between adjacent planks, as shown on page 4. It is clear that the tenons on the top ends of the planks are pinned into the wall plates, using treenails driven from the outside of the plates.

The plank-walled portion of the Greeley House may be assumed to compose the entire rear section of the main body of the dwelling as seen today. This building appears to have been placed over a stone-lined cellar that extended along the southeastern side of the house. Having an L-shaped plan, the original basement included a narrow section extending along the front or southwestern wall of the dwelling. This cellar, with walls of mortared fieldstone and a few split granite stones at the top, remains intact and connects at the corner of the "L" with the present door that provides exterior access to the basement from under the twentieth-century porch. This cellar includes a stone-lined well covered with a flat stone pierced by a circular hole.

The chimney of the plank-walled house may be presumed to have been a large, brick fireplace chimney supported by the natural earth and the stone basement walls at the unexcavated section beneath the original house. There is no remaining portion of the chimney above grade in this location.

*Remodeling of circa 1835.* Around 1835, as mentioned above, the Enfield Shakers purchased the Greeley property as an adjunct to the gristmill that operated in a portion of the Shakers' nearby woolen mill. The Shakers enlarged the house as a residence for non-Shaker millers whom they employed.[1] Because the plank-framed house was small, the Shakers enlarged and modernized it with an addition on the front (southwestern elevation), facing the road, as still seen today.

As seen through physical evidence within the present structure, the new frame is composed of sawn posts, studs, braces, and rafters, and was provided with an entirely new roof that uniformly covered both the addition and the original house. The roof frame was designed to provide the enlarged house with a then-fashionable broad gabled façade facing toward the southwest and commanding a view along the main street of the village and toward the mills that operated along the Mascoma River where the river passes beneath the streets of the village. The relationship between the house and nearby buildings, several of which are now gone, is suggested by the post card image on page 2 of this report.

Like the plank-walled section of the building, the framed addition is presently obscured by wall and ceiling coverings so that its construction cannot be observed in detail. One of the best current vantage points for evaluating the character of the frame is found beneath the porch on the southeastern side of the building. Here, removal of a porch ceiling covering has disclosed the side wall plate of the house, the tops of studs and braces, and the projecting feet of two common rafters, which are widely spaced at about four feet on centers, as seen on the following page.

---

[1] The Enfield Shakers appear to have enjoyed a unique connection with "the World" by maintaining several medium-scale industries in Enfield Village, across Mascoma Lake from the Shakers' "families" and connected to the main Shaker lands by the Shaker Bridge. The Shakers employed non-Shaker workers in these manufactories in a relationship that may have been unparalleled in other Shaker communities in the United States.

In choosing the gable-front design for the remodeled Greeley House, the Enfield Shakers adopted a house form that was widely popular throughout New England in the 1830s and 1840s. The Enfield Shakers themselves had adopted this general type of architecture at this period, as seen below, so the remodeled Greeley House would not have appeared alien to the evolving Shaker practice at this period.

*Above: Store building (right) and Great Stone Dwelling (1837-1841), Enfield Shaker Village.*

Subsequent remodeling, discussed below, has largely obliterated the interior architectural character that was given to the remodeled and enlarged Greeley House circa 1835. On the exterior, the original detailing, where it survives, is characteristic of the Greek Revival style, with plain, flat, diagonal mouldings, as seen on the exterior cornice, below:

Similarly, the interior detailing of the house, in the few areas where it has not been replaced, is composed of the plainest and simplest of Grecian mouldings. While this plainness may suggest the Shaker aesthetic, mouldings of this extreme simplicity were in fact characteristic of Greek Revival joinery in "the World" in the 1830s and 1840s, so the remodeling of the Greeley House apparently did not partake of any special Shaker character. The remodeling may in fact may have been contracted by the Shakers to some carpenter in Enfield Village, transforming the house into a commonplace but characteristic small home of the period.

The Greeley House retains a number of six-over-six window sashes that date from the enlargement of circa 1835. The muntin profile of these sashes is virtually the same as those used in the Shakers' Great Stone Dwelling (1837-1841) and in the surviving machine shop building (1849):

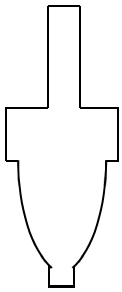

This profile is characteristic of general joinery of the period; there was little or no distinction between window sashes made by Shaker joiners and those made by joiners of "the World" at this time.

The interior of the enlarged dwelling was largely plastered over split-board lath. Except in areas where this lath was later replaced by circular-sawn wooden lathing, the split-board lath remains largely intact throughout both the plank-walled and the framed sections of the gable-front house, as seen in a chamber wall from the front portion of the dwelling, shown on the following page.

*Exposed area of split-board lath*

Until further physical investigation is carried out, we cannot know the floor plan that was originally given to the enlarged house circa 1835. The front entrance of the house opens onto a narrow dead-end passageway with doors to the right and left, leading to the two front rooms of the addition. The entry extends well into the depth of the addition, but never included a staircase leading to the second floor. The narrow passage apparently served primarily as a cloakroom.

It seems likely that stairs to the second floor were placed within the plank-framed house, where a stairway must already have existed. The current stairway, leading up from the northeast room of the main house, was apparently altered in 1892 but may rise within the general area of older staircases.

The main house is now served by a single-flue chimney of modern construction. This chimney rises through part of the basement beneath the plank-walled section of the house, emerging through the roof at the ridge. It primarily serves a boiler that provides central heating for the dwelling.

Many houses of circa 1835 were heated by air-tight stoves. This would be especially true of a house that had been remodeled under the direction of the Shakers, who favored stove heating earlier and more generally than did most New Englanders at this period. It is to be expected that a house of four principal first-story rooms, like the Greeley House after its enlargement, would have been served by two chimneys, so placed as to connect to stoves in both the front and the rear rooms, and to provide heat through circular floor registers to the chambers above. Chimney locations for the house as enlarged have not yet been determined.

*Remodeling of 1892:* Although we know that the Greeley House was substantially remodeled between 1923 and 1935, as mentioned above and discussed below, George W. Burnham left written testimony that he likewise "thoroughly repaired" the house in 1892 and raised the structure one foot. The National Register nomination indicates that Burnham, a butcher, owned the property at least until the 19-teens.

Burnham's changes include flat-board casings around most doors and windows, a late-nineteenth-century newel post at the head of the stairs, two-over-two window sashes with muntins of a modern profile, and a metal ceiling in the first-story southwest room, which presumably served as the parlor. Most important for mapping and understanding changes that occurred at this period, a number of the partitions of the house are lathed with sawn wooden lath rather than split-board lath. It will be important to try to record the areas of newer lath in order to understand the alterations of this period; helpfully, plaster has been damaged in many places in the house, allowing at least a glimpse of the underlying lath in a number of locations.

*Alterations of circa 1930.* Sanborn fire insurance maps between 1893 and 1923 reveal that the house retained its long-time configuration during this period. These maps (abstracted on page 3 of this report) do not reveal the floor plan of the house. They do indicate that the wing was then placed in line with the

northwest side elevation of the main house, that the wing was attached to a two-story barn, and that the barn had two small sheds aligned off its northeast corner, one shed being enclosed and the second, or outer shed, being open on one side. The map symbols suggest that the shed was not integrated with the house frame during this period, but that it was separate and perhaps slightly distant from the rear wall of the dwelling. These attributes remained intact even in 1923, when the property was labeled "D[welling] and Telephone Exchange" on the map.

An available Sanborn map of 1935, based on the data of the 1923 map but updated to show changes, records a dramatic alteration in the property. The house was still labeled "D[welling] and Telephone Exchange" on the 1935 map; at this period, according to the National Register nomination, the property was owned and occupied by town postmaster Herbert Walbridge. According to the 1930 Federal Census, Walbridge "had a large family with his wife, Jessie."

The insurance maps shows that by 1935 the Walbridge family had removed the two-story barn and its attached sheds at the end of the wing. They had moved the shed to the center of the rear elevation of the main house. Whereas the shed may previously have been slightly detached and utilitarian in nature, the Walbridges converted it to a spacious kitchen that probably supplanted an earlier kitchen located in the northeastern corner of the main house, thus gaining additional living space for their "large family."

To accomplish these changes and improve the house, the Walbridge family placed a new, integrated foundation beneath the main house, probably raising the building for a second time. This foundation is composed of poured concrete up to grade level. Above grade, the foundation is built of hollow concrete blocks with rusticated faces that resemble split stone, as seen in this photograph. An underpinning wall of the same rusticated concrete blocks also supports the wing on the northwest side, toward Main Street, where the elevation of the street is considerably higher than the foundation of the wing. A full basement of the same construction was provided beneath the circa 1835 front portion of the house, which may previously have stood over a crawl space; there is no clear evidence of the substructure of 1835. As shown on the map, high porch was added along the southeast side of the house around 1930, wrapping around the northeast corner to intersect the rear wing.

To cover the frame of the relocated wing and finish it as a new kitchen, the Walbridge family utilized sheet materials, which were widely available and popular around 1930. The ceiling of the kitchen was covered with one of the popular products of the period, perhaps Beaver Board, Sterling wallboard, or another of many available products. The Walbridges also used drywall (gypsum board) in some areas. They probably added a few five-cross-panel doors, popular at the time, now seen in the house.

The relocation of the wing and its finishing on the interior obscured its character and construction. The general nature of the frame of the wing can be seen in its attic, however. Here, it is evident that the wing

is constructed much like the front section of the main house, built circa 1835. The rafters are sawn on a reciprocating (up-and-down) sawmill, and, like those on the main roof, are spaced very widely apart. The rafters of the wing differ from those of the main roof in lacking bird's-mouth joints and deep overhangs at the eaves. Although the roof frame of the main house was not studied in detail, it seems likely that the two frames will be found to correspond closely in design, materials, and, probably, in date.

*Roof frame of the wing of the Greeley House, with widely-spaced common rafters and no ridgepole.*

*Secretary of the Interior's Standards.* The Enfield Village Association has indicated that it wishes to apply the *Secretary of the Interior's Standards* in the rehabilitation of the Greeley House. While the use of these *Standards* is not mandatory except in projects that involve National Register-eligible properties and receive federal funding or tax credits, or that require federal permits, the *Standards* are always a good general guide to the rehabilitation of a building which, like the Greeley House, has been determined to be historically or architecturally significant.

"Rehabilitation" is defined as the act or process of making possible a compatible use for a property through repair, alterations, and additions while preserving those portions or features which convey its historical, cultural, or architectural values.

The *Secretary of the Interior's Standards for Rehabilitation* are:

1. A property will be used as it was historically or be given a new use that requires minimal change to its distinctive materials, features, spaces, and spatial relationships.
2. The historic character of a property will be retained and preserved. The removal of distinctive materials or alteration of features, spaces, and spatial relationships that characterize a property will be avoided.
3. Each property will be recognized as a physical record of its time, place, and use. Changes that create a false sense of historical development, such as adding conjectural features or elements from other historic properties, will not be undertaken.
4. Changes to a property that have acquired historic significance in their own right will be retained and preserved.
5. Distinctive materials, features, finishes, and construction techniques or examples of craftsmanship that characterize a property will be preserved.
6. Deteriorated historic features will be repaired rather than replaced. Where the severity of deterioration requires replacement of a distinctive feature, the new feature will match the old in design, color, texture, and, where possible, materials. Replacement of missing features will be substantiated by documentary and physical evidence.
7. Chemical or physical treatments, if appropriate, will be undertaken using the gentlest means possible. Treatments that cause damage to historic materials will not be used.
8. Archaeological resources will be protected and preserved in place. If such resources must be disturbed, mitigation measures will be undertaken.
9. New additions, exterior alterations, or related new construction will not destroy historic materials, features, and spatial relationships that characterize the property. The new work shall be differentiated from the old and will be compatible with the historic materials, features, size, scale and proportion, and massing to protect the integrity of the property and its environment.
10. New additions and adjacent or related new construction will be undertaken in such a manner that, if removed in the future, the essential form and integrity of the historic property and its environment would be unimpaired.

In applying these *Standards* to the Greeley House, it will be important to discern the several periods and types of construction, and the stylistic character, which define the house as it is seen today.

As summarized above, the Greeley House embodies three main periods of construction. The present building includes the original plank-walled dwelling of 1823, which stands over an original cellar with a foundation of local fieldstone. Second, the building also includes the front section and the broad roof that were reportedly added by the Enfield Shakers circa 1835 for the better accommodation of employees who worked in a nearby Shaker-owned gristmill. Third, the property includes a one-story rear wing that may be contemporary with the changes of circa 1835, but which was relocated and attached to the center of the rear elevation of the main house as a kitchen around 1930.

As enlarged and remodeled by the Shakers, the house exhibits the general form of a one-and-a-half-story broad-gabled dwelling of a type that was highly popular during the 1830s and 1840s. This house form suggests the pervasive Greek Revival style through its resemblance to the outline of a classical temple, but was also employed by the Shakers as a practical and symmetrical building type that could adapt to many uses. It will be important to retain this architectural form during future rehabilitation.

Stylistically, the exterior of the Greeley House reflects the deliberately plain characteristics of the Greek Revival style, altered by the porch of circa 1930 on its east side, facing the adjacent Mascoma River.

The interior of the house is stylistically nondescript, exhibiting materials of several different periods, but not expressing strong architectural character in its detailing. The principal spaces in the house are the two front rooms on the first story, on each side of the narrow front entry, and the large bedchamber above, all encompassed within the addition of circa 1835. The detailing in all these rooms, apparently dating from George W. Burnham's "thorough repairs" of 1892, is extremely and deliberately plain, being composed of square-edged door and window casings and baseboards. The geometry of these principal spaces, however, should be retained during rehabilitation.

Most of the windows lighting rooms in the main portion of the house retain six-over-six window sashes of circa 1835, exhibiting the muntin profile shown on page 7 of this report. Where they survive, the windows of the kitchen wing have two-over-two sashes of a twentieth-century pattern. Some of the windows in the kitchen wing have been blocked with insulating board and their sashes moved to openings in the front of the house; some disused sashes are stored beneath the eaves of the main house. In general, it appears that the Shaker remodeling of circa 1835 included six-over-six sashes with the muntin profile shown on page 7 of this report, and that the remodeling of the kitchen wing, circa 1930, utilized two-over-two sashes.

The rear rooms and the staircase of the main house, occupying the plank-walled shell of the original Greeley House, display detailing that is similar in character to the front rooms, but these spaces are smaller and less coherent than the front rooms.

The kitchen wing, adapted from an earlier wing that may have been unfinished until it was relocated and adapted circa 1930, displays surfaces of sheet materials of that period, made either from wood fiber or gypsum. The kitchen displays little stylistic character; its square-edged door and window casings are similar to those in the front rooms, but differ in slight details and thus reveal their different date. With the exception of one door casing on the second floor of the main house, which has wide, flat backbands, there are no interior architectural mouldings in the building.

In applying the *Secretary's Standards for Rehabilitation*, it will be important to refine the conclusions of this report through closer study of the interior building fabric and to attempt to understand the evolution of the house over time. Such an understanding will permit a more sensitive application of the *Standards* by differentiating original features, and features that have acquired historical significance in their own right, from recent and casual changes.

Application of the *Secretary's Standards* will also entail an understanding of applicable building codes. While the designation of the Greeley House as a contributing property in the Enfield Village National Register Historic District relieves the house from mandatory compliance with certain codes, including the New Hampshire State Energy Code, it will be important to adhere to current standards for energy efficiency and life safety while retaining and preserving the historic character of the Greeley House.

Certain features of the Greeley House will require redesign. The current bathroom facilities, for example, are placed within the plank-walled section of the structure and have no evident direct or indirect ventilation or natural light.

While the Greeley House is exempted through its historical designation from the New Hampshire State Energy Code, the house currently has thermal insulation of a varied and makeshift nature. For reasons of heating and ventilating cost, if nothing else, the house should be studied closely and an energy conservation plan should be developed for the structure with due observance of the *Secretary's Standards*. This task is especially important because of the varied nature of the wall construction. The plank-walled section at the rear of the main house, for example, will have no wall cavities except where it may have been altered, and thus cannot be insulated by adding materials within the wall fabric.

Elsewhere, the framed sections of the main house clearly include a mixture of loose cellulose insulation, fiberglass batts and rolls, cardboard sheets, rigid insulation boards, and other attempts to reduce heat loss or air infiltration. There is little clear evidence of any attempt to control water vapor in all these makeshifts; where vapor retarding films exist, they are often applied on the cold side of a wall, opposite to recommended practice. There is thus a high potential for damaging condensation within the house as it is presently configured, reduced only by the clearly pervious nature of the envelope of the dwelling, which must allow much water vapor to escape to the outdoors. Management of water vapor is important not only because of future human occupancy of the house, which will generate varying degrees of moisture depending on the nature of the occupancy, but also because of the nature of the basements. The original-stone-lined cellar is deep and contains a well. The newer basement that was excavated under the front section of the house has a dirt floor. In all cases, these basement areas have the potential of contributing water vapor to the rooms above. Unless water vapor is understood and controlled, it has the potential to do great harm to the building.