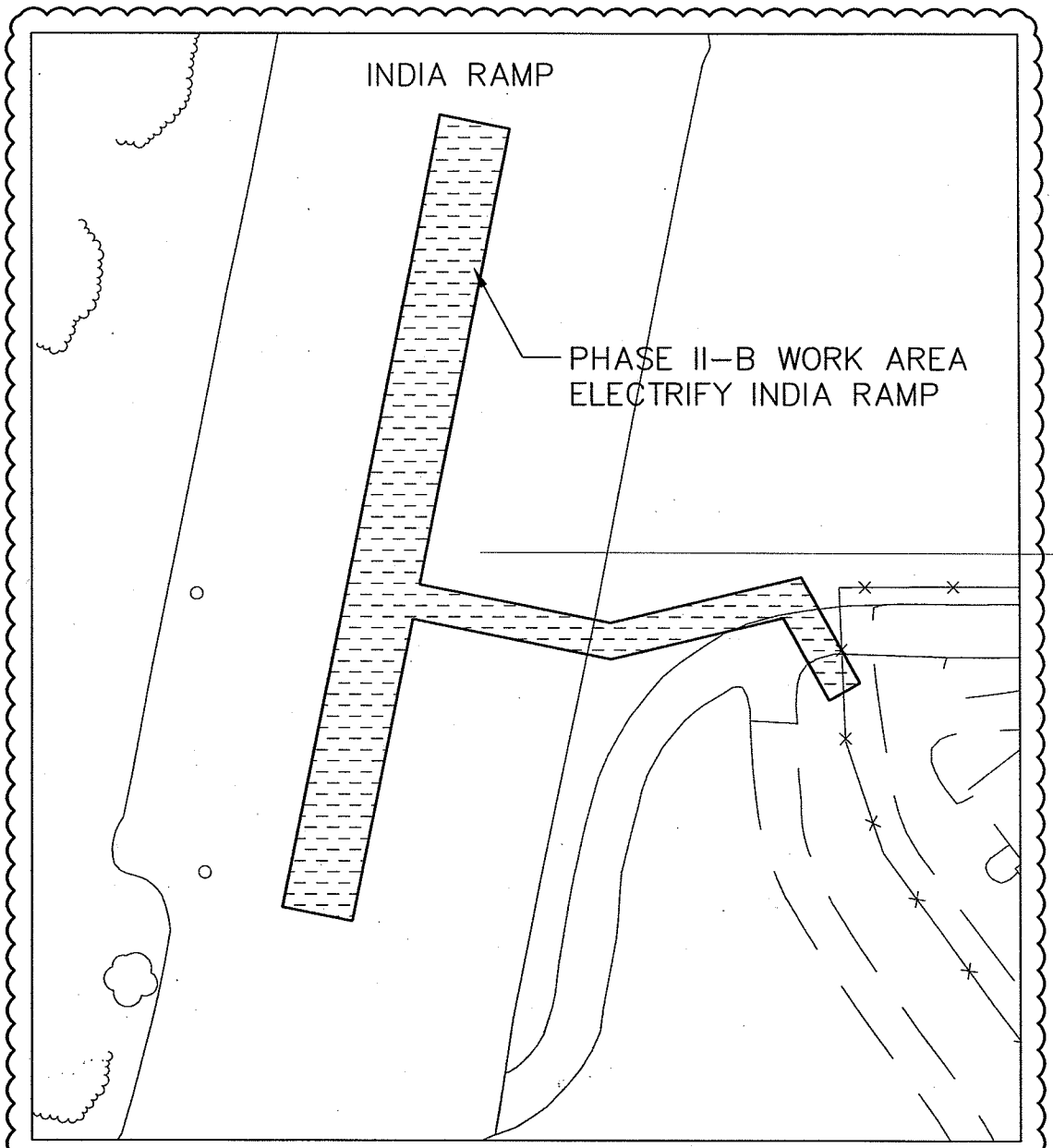

1 PHASE II–B MAP 1

SCALE: 1"=100'

CUT ALONG DASHED LINE AND INSERT
ONTO APPROPRIATE 'BID SET' PLAN

GRAPHIC SCALE
0 25 50 100
SCALE: 1" = 100'

GALE
Gale Associates, Inc
Engineers Architects Planners
15 Constitution Drive
Bedford, NH 03110
P 603.471.1887 F 603.471.1809
www.gainc.com
Boston Baltimore Orlando San Francisco

ADDENDUM NO. 1
REVISIONS TO BE INSERTED
ONTO 'BID SET' DWG. NO. S1.1

RECONSTRUCT TOWER APRON (APPROX. 850 LF X 250 LF)
BOIRE FIELD – NASHUA MUNICIPAL AIRPORT – NASHUA, NEW HAMPSHIRE
SBG NO. 12–03–2009

PROJ. NO:	DRAWN	REVIEWED	CADD FILE
776440	NAI	BJH	776440–S11–ADD1

DATE:	MAY 1, 2009
SCALE:	AS SHOWN
REVISION:	ADDENDUM NO. 1

S1.1A

U:\776440-ASH Apron\Drawings\Plans\020-Safety Plans-ADD1.dwg, 5/1/2009 12:52:19 PM, ewt

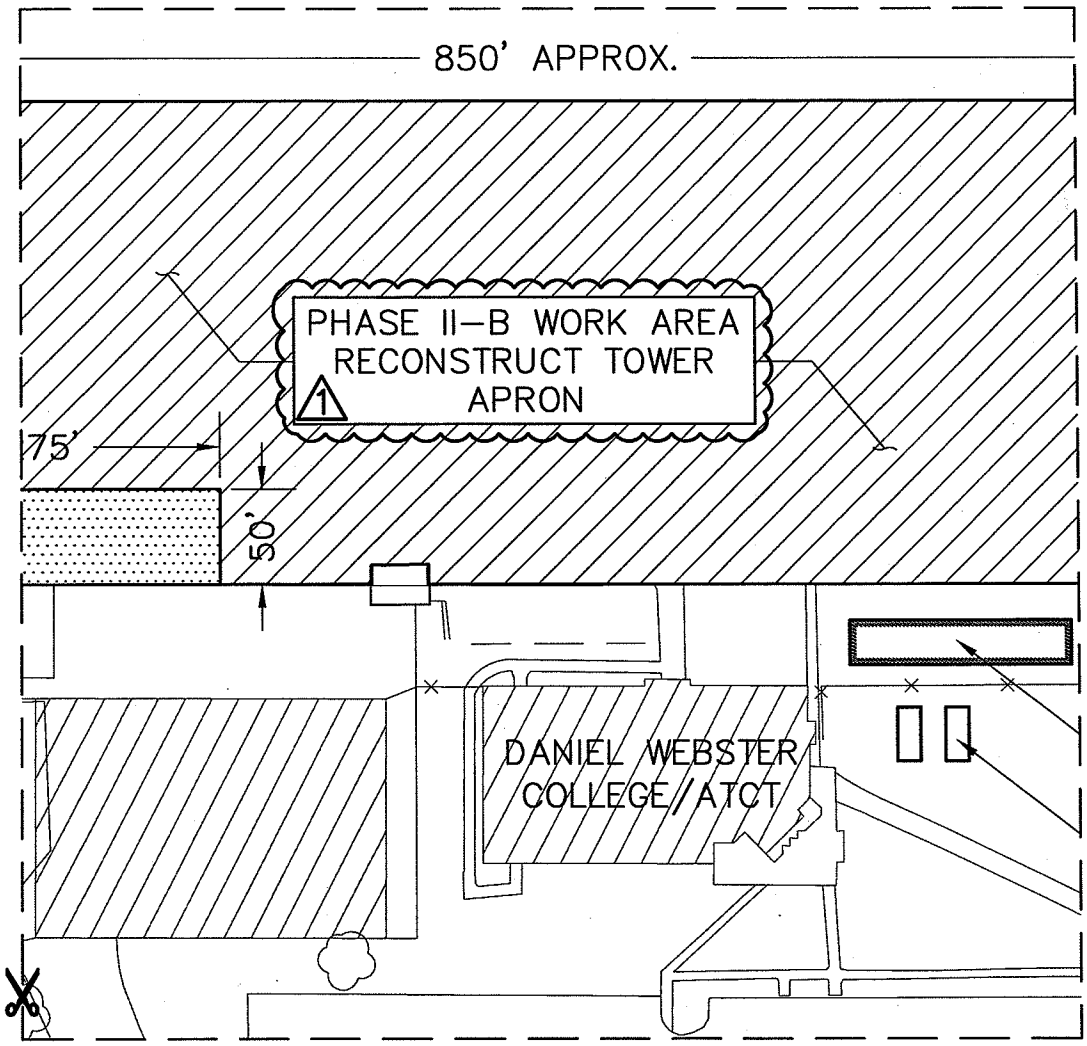

CUT ALONG DASHED LINE AND INSERT
ONTO APPROPRIATE 'BID SET' PLAN

GRAPHIC SCALE
0 25 50 100
SCALE: 1" = 100'

GALE
Gale Associates, Inc
Engineers Architects Planners
15 Constitution Drive
Bedford, NH 03110
P 603.471.1887 F 603.471.1809
www.gainc.com
Boston Baltimore Orlando San Francisco

ADDENDUM NO. 1
REVISIONS TO BE INSERTED
ONTO 'BID SET' DWG. NO. S1.1

RECONSTRUCT TOWER APRON (APPROX. 850 LF X 250 LF)
BOIRE FIELD – NASHUA MUNICIPAL AIRPORT – NASHUA, NEW HAMPSHIRE
SBG NO. 12-03-2009

PROJ. NO:	DRAWN	REVIEWED	CADD FILE
776440	NAI	BJH	776440-S11-ADD1

DATE:	MAY 1, 2009
SCALE:	AS SHOWN
REVISION:	ADDENDUM NO. 1

S1.1B

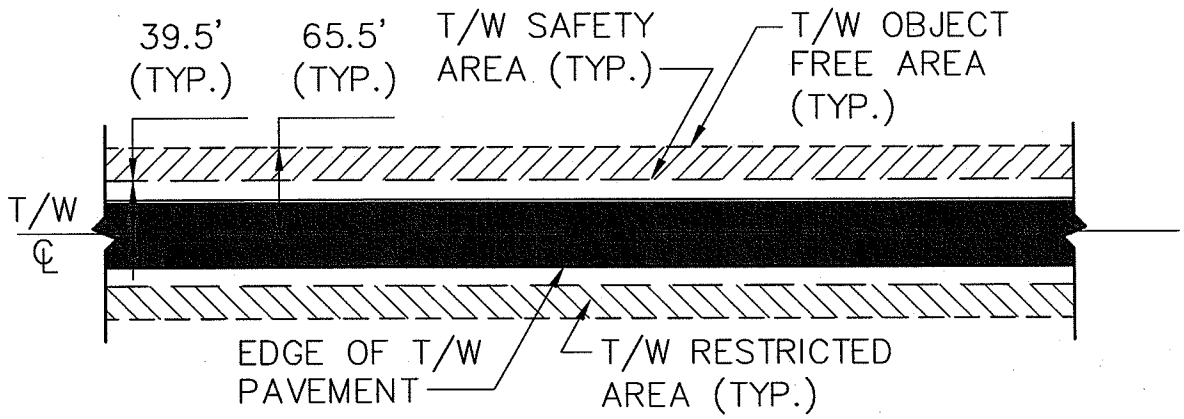

⚠1 TAXIWAY/TAXILANE RESTRICTED ⚠1 CONSTRUCTION AREAS

N.T.S.

CUT ALONG DASHED LINE AND INSERT
ONTO APPROPRIATE 'BID SET' PLAN

GRAPHIC SCALE
0 25 50 100
SCALE: 1" = 100'

GALE
Gale Associates, Inc
Engineers Architects Planners
15 Constitution Drive
Bedford, NH 03110
P 603.471.1887 F 603.471.1809
www.gainc.com
Boston Baltimore Orlando San Francisco

ADDENDUM NO. 1
REVISIONS TO BE INSERTED
ONTO 'BID SET' DWG. NO. S1.1

RECONSTRUCT TOWER APRON (APPROX. 850 LF X 250 LF)
BOIRE FIELD – NASHUA MUNICIPAL AIRPORT – NASHUA, NEW HAMPSHIRE
SBG NO. 12-03-2009

PROJ. NO:	DRAWN	REVIEWED	CADD FILE
776440	NAI	BJH	776440-S11-ADD1

DATE:	MAY 1, 2009
SCALE:	AS SHOWN
REVISION:	ADDENDUM NO. 1

S1.1C

U:\776440-ASH Apron\Drawings\Plans\020-Safety Plans-ADD1.dwg, 5/1/2009 12:52:30 PM, eem

⚠ LEGEND ⚠

- PHASE I–A WORK AREA
- PHASE I–B WORK AREA
- PHASE II–A WORK AREA
- PHASE II–B WORK AREA
- CONTRACTOR STAGING AREA
- LIGHTED BARRICADE
- MAPPED WETLANDS
- CONTRACTOR HAUL ROUTE

ERIAL STOCKPILE NOTE:

CUT ALONG DASHED LINE AND INSERT
ONTO APPROPRIATE 'BID SET' PLAN

GRAPHIC SCALE
0 25 50 100
SCALE: 1" = 100'

GALE
Gale Associates, Inc
Engineers Architects Planners
15 Constitution Drive
Bedford, NH 03110
P 603.471.1887 F 603.471.1809
www.gainc.com
Boston Baltimore Orlando San Francisco

ADDENDUM NO. 1
REVISIONS TO BE INSERTED
ONTO 'BID SET' DWG. NO. S1.1

RECONSTRUCT TOWER APRON (APPROX. 850 LF X 250 LF)
BOIRE FIELD – NASHUA MUNICIPAL AIRPORT – NASHUA, NEW HAMPSHIRE
SBG NO. 12–03–2009

PROJ. NO:	DRAWN	REVIEWED	CADD FILE
776440	NAI	BJH	776440–S11–ADD1

DATE:	MAY 1, 2009
SCALE:	AS SHOWN
REVISION:	ADDENDUM NO. 1

S1.1D

U:\776440-ASB Apron\Drawings\Plans\020-Safety Plan-ADD1.dwg, 5/1/2009 12:52:35 PM, ewa

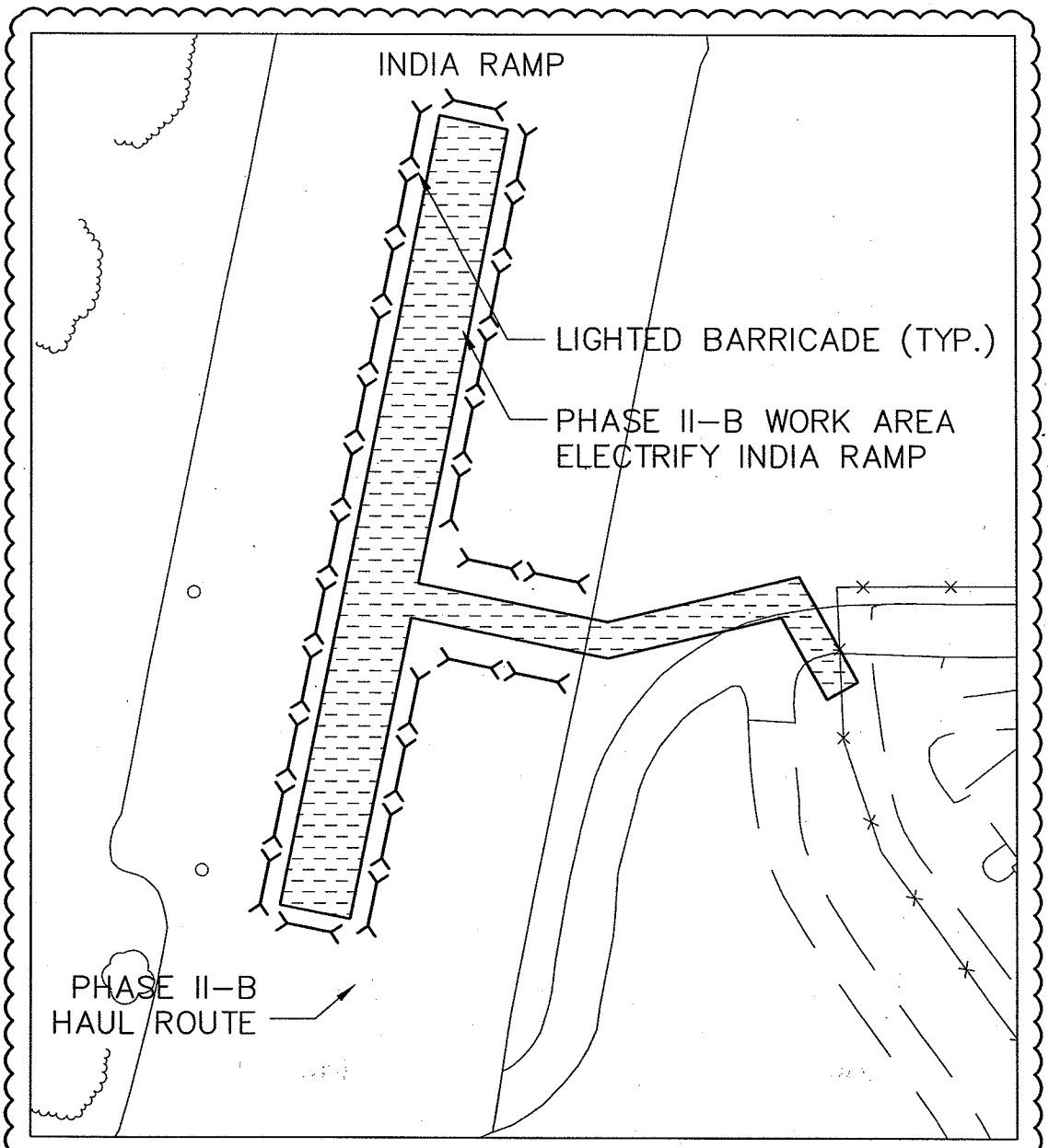

1 PHASE II–B MAP 1

SCALE: 1"=100'

CUT ALONG DASHED LINE AND INSERT
ONTO APPROPRIATE 'BID SET' PLAN

GRAPHIC SCALE
0 25 50 100
SCALE: 1" = 100'

GALE
Gale Associates, Inc
Engineers Architects Planners
15 Constitution Drive
Bedford, NH 03110
P 603.471.1887 F 603.471.1809
www.gainc.com
Boston Baltimore Orlando San Francisco

ADDENDUM NO. 1
REVISIONS TO BE INSERTED
ONTO 'BID SET' DWG. NO. S1.3

RECONSTRUCT TOWER APRON (APPROX. 850 LF X 250 LF)
BOIRE FIELD – NASHUA MUNICIPAL AIRPORT – NASHUA, NEW HAMPSHIRE
SBG NO. 12–03–2009

PROJ. NO:	DRAWN	REVIEWED	CADD FILE
776440	NAI	BJH	776440–S11–ADD1

DATE:	MAY 1, 2009
SCALE:	AS SHOWN
REVISION:	ADDENDUM NO. 1

S1.3A

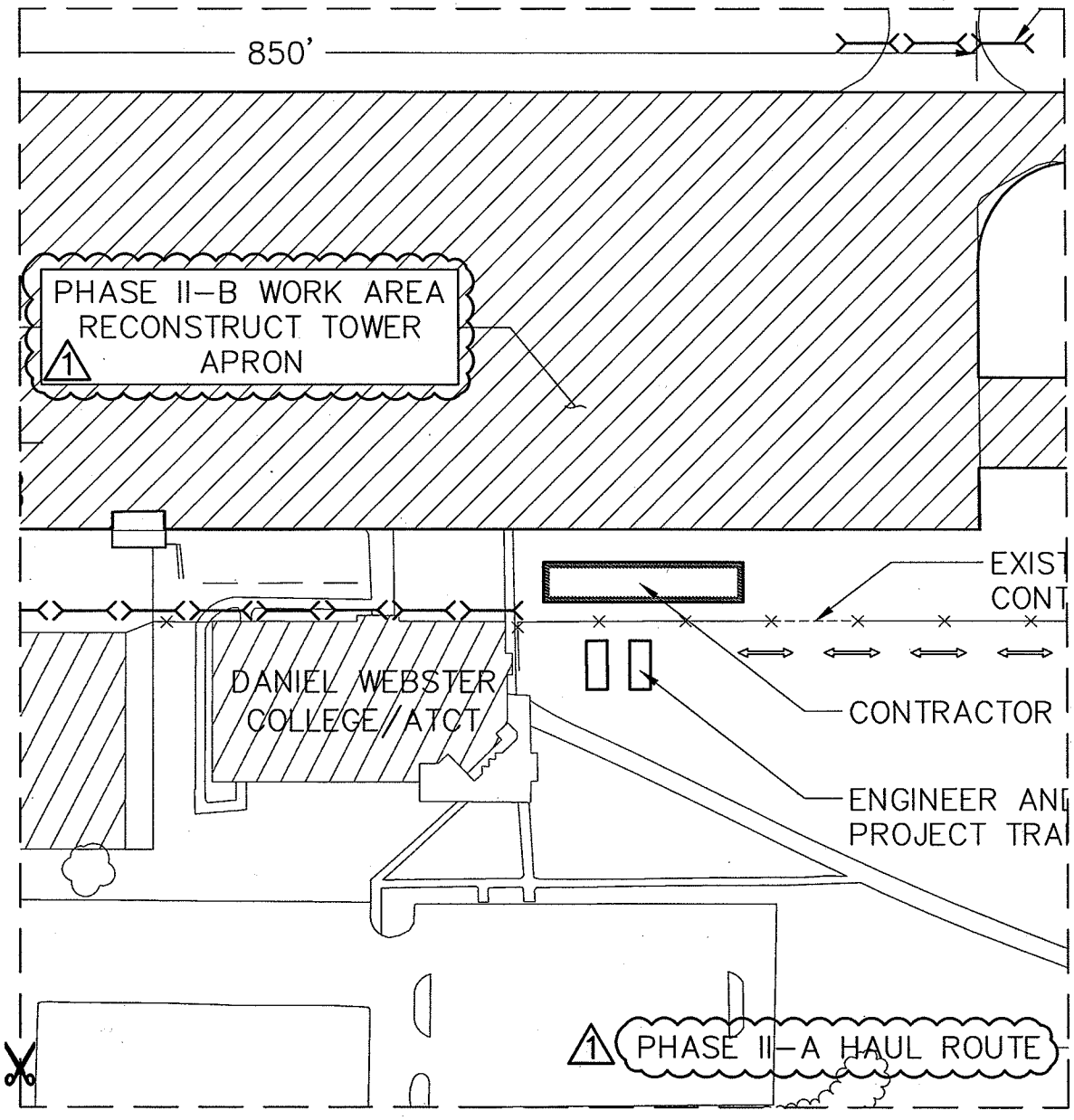

CUT ALONG DASHED LINE AND INSERT
ONTO APPROPRIATE 'BID SET' PLAN

GRAPHIC SCALE
0 25 50 100
SCALE: 1" = 100'

GALE
Gale Associates, Inc
Engineers Architects Planners
15 Constitution Drive
Bedford, NH 03110
P 603.471.1887 F 603.471.1809
www.gainc.com
Boston Baltimore Orlando San Francisco

ADDENDUM NO. 1
REVISIONS TO BE INSERTED
ONTO 'BID SET' DWG. NO. S1.3

RECONSTRUCT TOWER APRON (APPROX. 850 LF X 250 LF)
BOIRE FIELD – NASHUA MUNICIPAL AIRPORT – NASHUA, NEW HAMPSHIRE
SBG NO. 12-03-2009

PROJ. NO:	DRAWN	REVIEWED	CADD FILE
776440	NAI	BJH	776440-S11-ADD1

DATE:	MAY 1, 2009
SCALE:	AS SHOWN
REVISION:	ADDENDUM NO. 1

S1.3B

⚠ LEGEND ⚠

- PHASE II–A WORK AREA
- PHASE II–B WORK AREA
- PHASE I CONSTRUCTED AREA
- CONTRACTOR STAGING AREA
- LIGHTED BARRICADE
- MAPPED WETLANDS
- CONTRACTOR HAUL ROUTE

NOTES:

1. ALL WORK BY THE CONTRACTOR SHALL BE IN A
THE MOST RECENT FAA ADVISORY CIRCUL
ENTITLED "OPERATIONAL SAFETY ON AI
CONSTRUCTION".

CUT ALONG DASHED LINE AND INSERT
ONTO APPROPRIATE 'BID SET' PLAN

GRAPHIC SCALE
0 25 50 100
SCALE: 1" = 100'

GALE
Gale Associates, Inc
Engineers Architects Planners
15 Constitution Drive
Bedford, NH 03110
P 603.471.1887 F 603.471.1809
www.gainc.com
Boston Baltimore Orlando San Francisco

ADDENDUM NO. 1
REVISIONS TO BE INSERTED
ONTO 'BID SET' DWG. NO. S1.3

RECONSTRUCT TOWER APRON (APPROX. 850 LF X 250 LF)
BOIRE FIELD – NASHUA MUNICIPAL AIRPORT – NASHUA, NEW HAMPSHIRE
SBG NO. 12–03–2009

PROJ. NO:	DRAWN	REVIEWED	CADD FILE
776440	NAI	BJH	776440–S11–ADD1

DATE:	MAY 1, 2009
SCALE:	AS SHOWN
REVISION:	ADDENDUM NO. 1

S1.3C

B. PHASING 1

IN ORDER TO MINIMIZE THE DISTURBANCE TO
DIVIDED INTO TWO (2) PHASES WITH A TOTAL
AREA, PHASE I–B WORK AREA, PHASE II–A WO
DWG. NOS. S1.1 THROUGH S1.3 AND SPECIFICATION

C. PROJECT DURATION

THE PROJECT DURATION IS SEVENTY–FIVE (75)
PROJECT. SEE DWG. NOS. S1.1 THROUGH S1.3 AN
INFORMATION.

2. RUNWAY AND TAXIWAY MARKING AND LIGHTING

THE RUNWAY AND TAXIWAY LIGHTING SYSTEMS ARE
THEY SHALL BE OPERATIONAL FOR THE DURATION

CUT ALONG DASHED LINE AND INSERT
ONTO APPROPRIATE 'BID SET' PLAN

IRPORT OPERATIONS THE PROJECT HAS BEEN
OF FOUR (4) WORK AREAS; PHASE I–A WORK
RK AREA AND PHASE II–B WORK AREA. SEE
SECTION M–001 FOR FURTHER INFORMATION.

CALENDAR DAYS FROM THE START OF THE
D SPECIFICATION SECTION M–001 FOR FURTHER

NOT IMPACTED BY THIS PROJECT AND THUS
OF THE PROJECT. THE RUNWAY AND TAXIWAY

CUT ALONG DASHED LINE AND INSERT
ONTO APPROPRIATE 'BID SET' PLAN

GRAPHIC SCALE

SCALE: N.T.S

GALE
Gale Associates, Inc
Engineers Architects Planners
15 Constitution Drive
Bedford, NH 03110
P 603.471.1887 F 603.471.1809
www.gainc.com
Boston Baltimore Orlando San Francisco

ADDENDUM NO. 1
REVISIONS TO BE INSERTED
ONTO 'BID SET' DWG. NO. S2.1

RECONSTRUCT TOWER APRON (APPROX. 850 LF X 250 LF)
BOIRE FIELD – NASHUA MUNICIPAL AIRPORT – NASHUA, NEW HAMPSHIRE
SBG NO. 12–03–2009

PROJ. NO:	DRAWN	REVIEWED	CADD FILE
776440	NAI	BJH	776440–S11–ADD1

DATE:	MAY 1, 2009
SCALE:	AS SHOWN
REVISION:	ADDENDUM NO. 1

S2.1A

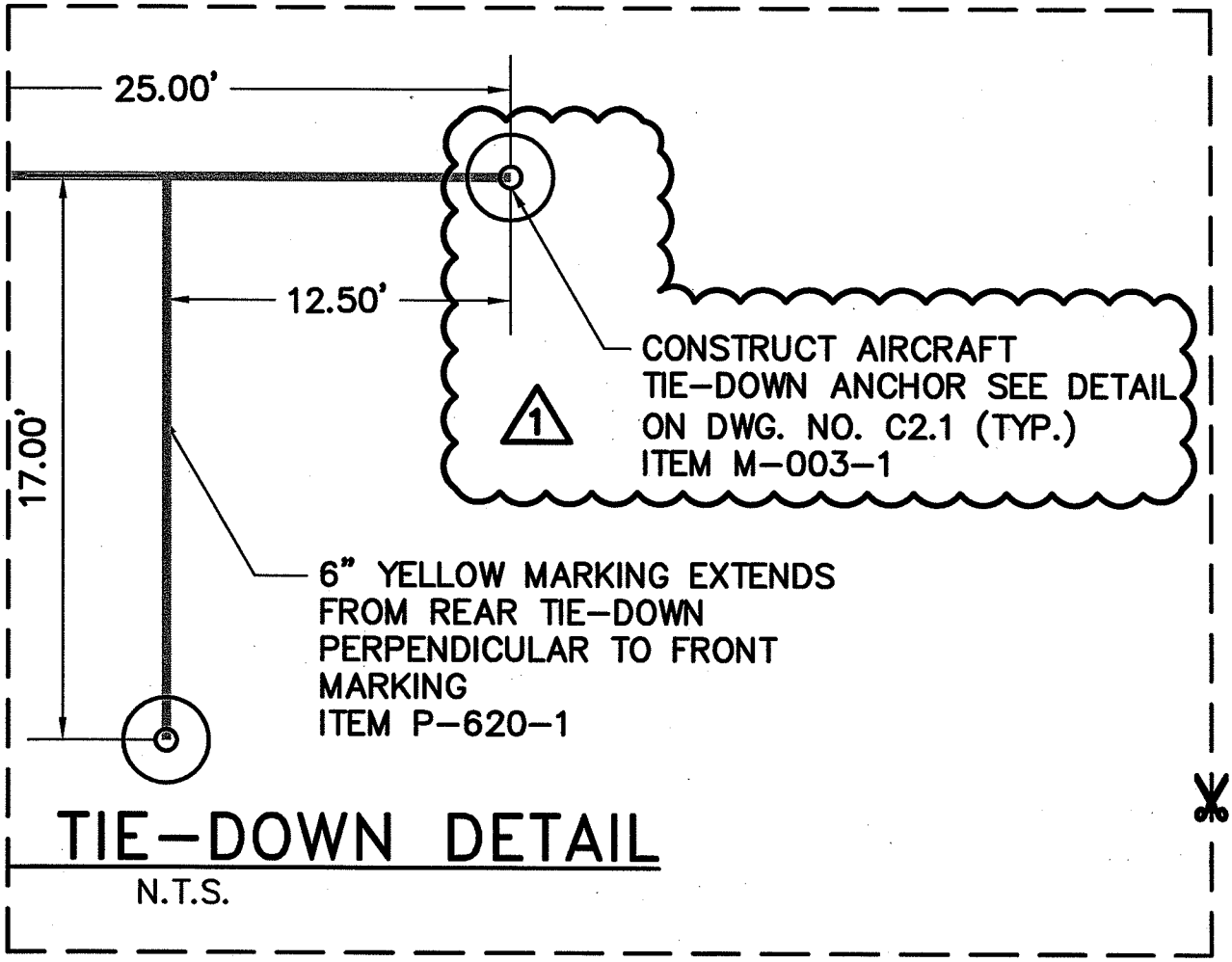

TIE-DOWN DETAIL

N.T.S.

CUT ALONG DASHED LINE AND INSERT
ONTO APPROPRIATE 'BID SET' PLAN

GRAPHIC SCALE
0 10 20 40
SCALE: 1" = 40'

GALE
Gale Associates, Inc
Engineers Architects Planners
15 Constitution Drive
Bedford, NH 03110
P 603.471.1887 F 603.471.1809
www.gainc.com
Boston Baltimore Orlando San Francisco

ADDENDUM NO. 1
REVISIONS TO BE INSERTED
ONTO 'BID SET' DWG. NO. C1.1

RECONSTRUCT TOWER APRON (APPROX. 850 LF X 250 LF)
BOIRE FIELD – NASHUA MUNICIPAL AIRPORT – NASHUA, NEW HAMPSHIRE
SBG NO. 12-03-2009

PROJ. NO:	DRAWN	REVIEWED	CADD FILE
776440	NAI	BJH	776440-S11-ADD1

DATE:	MAY 1, 2009
SCALE:	AS SHOWN
REVISION:	ADDENDUM NO. 1

C1.1A

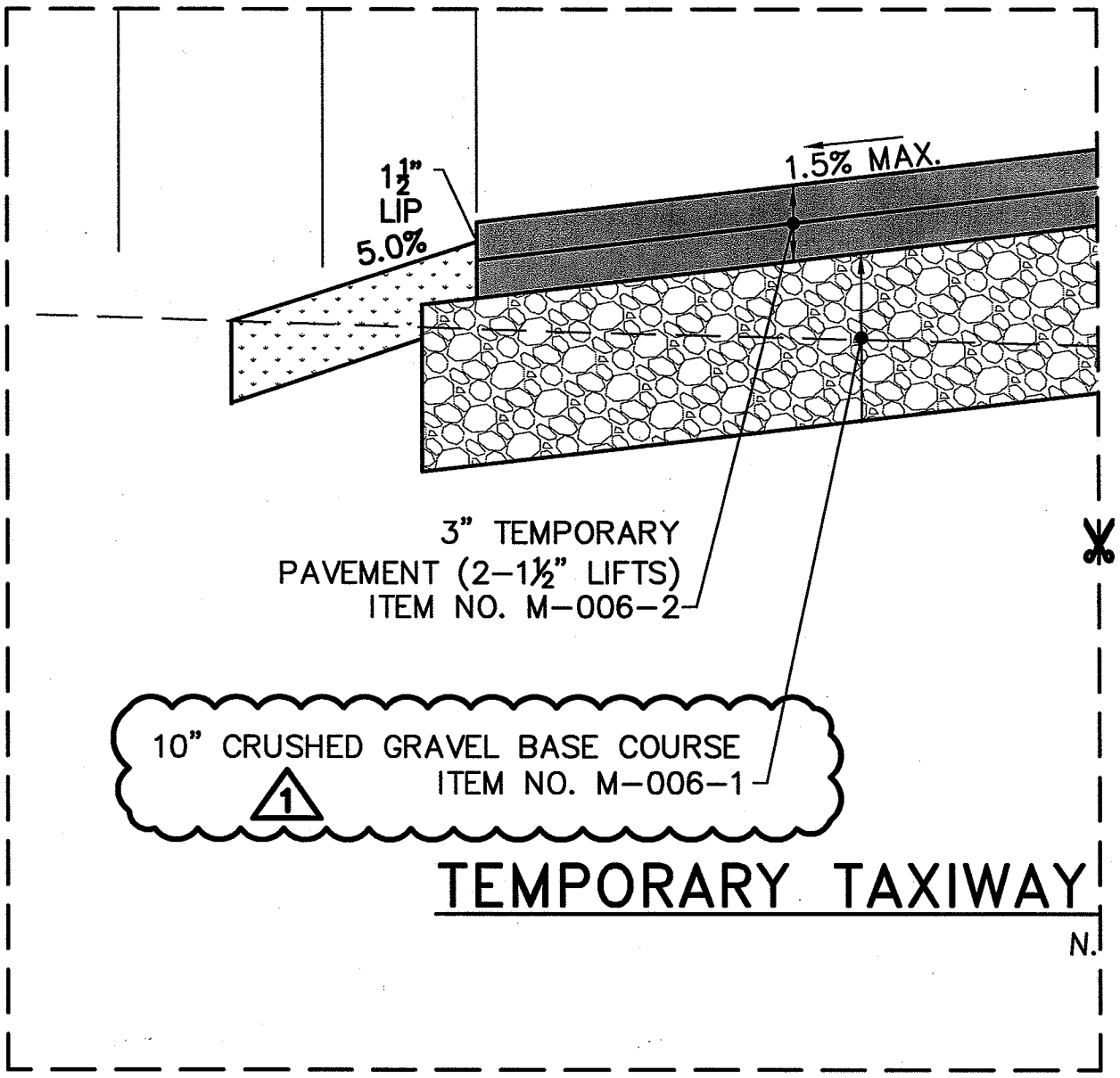

CUT ALONG DASHED LINE AND INSERT
ONTO APPROPRIATE 'BID SET' PLAN

GRAPHIC SCALE
NS NS NS NS
NO SCALE

GALE
Gale Associates, Inc
Engineers Architects Planners
15 Constitution Drive
Bedford, NH 03110
P 603.471.1887 F 603.471.1809
www.gainc.com
Boston Baltimore Orlando San Francisco

ADDENDUM NO. 1
REVISIONS TO BE INSERTED
ONTO 'BID SET' DWG. NO. C2.1

RECONSTRUCT TOWER APRON (APPROX. 850 LF X 250 LF)
BOIRE FIELD – NASHUA MUNICIPAL AIRPORT – NASHUA, NEW HAMPSHIRE
SBG NO. 12–03–2009

PROJ. NO:	DRAWN	REVIEWED	CADD FILE
776440	NAI	BJH	776440–S11–ADD1

DATE:	MAY 1, 2009
SCALE:	AS SHOWN
REVISION:	ADDENDUM NO. 1

C2.1A

U:\776440-ASH Apron\Drawings\Plans\041\Typical Sections-ADD1.dwg, 5/1/2009 4:53:17 PM, nai

1. ALL PREFABRICATED REINFORCED CONCRETE STRUCTURES AND FRAME AND GRATES SHALL BE DESIGNED AND CONSTRUCTED TO SUPPORT A 175,000 LB DUAL WHEEL LOAD. THE CONTRACTOR IS REQUIRED TO SUBMIT SHOP DRAWINGS AND MANUFACTURER CERTIFICATIONS TO THE ENGINEER FOR REVIEW PRIOR TO INSTALLATION. SHOP DRAWINGS FOR LOADING SHALL BE STAMPED BY A PROFESSIONAL ENGINEER LICENSED IN NEW HAMPSHIRE.

2. A GRADE RING OR BRICKS ARE REQUIRED. IF BRICKS ARE USED A MINIMUM OF TWO (2) TO A MAXIMUM OF FOUR (4) COURSES ARE REQUIRED. THE GRADE RING SHALL BE A MINIMUM OF SIX (6) INCHES TO A MAXIMUM OF TWELVE (12) INCHES.

5' DIA. DROP INLET DETAIL

N.T.S.

1

CUT ALONG DASHED LINE AND INSERT ONTO APPROPRIATE 'BID SET' PLAN

GRAPHIC SCALE
NS NS NS NS
NO SCALE

GALE
Gale Associates, Inc
Engineers Architects Planners
15 Constitution Drive
Bedford, NH 03110
P 603.471.1887 F 603.471.1809
www.gainc.com
Boston Baltimore Orlando San Francisco

ADDENDUM NO. 1
REVISIONS TO BE INSERTED ONTO 'BID SET' DWG. NO. C3.2

RECONSTRUCT TOWER APRON (APPROX. 850 LF X 250 LF)
BOIRE FIELD – NASHUA MUNICIPAL AIRPORT – NASHUA, NEW HAMPSHIRE
SBG NO. 12-03-2009

PROJ. NO:	DRAWN	REVIEWED	CADD FILE
776440	NAI	BJH	776440-S11-ADD1

DATE:	MAY 1, 2009
SCALE:	AS SHOWN
REVISION:	ADDENDUM NO. 1

C3.2A

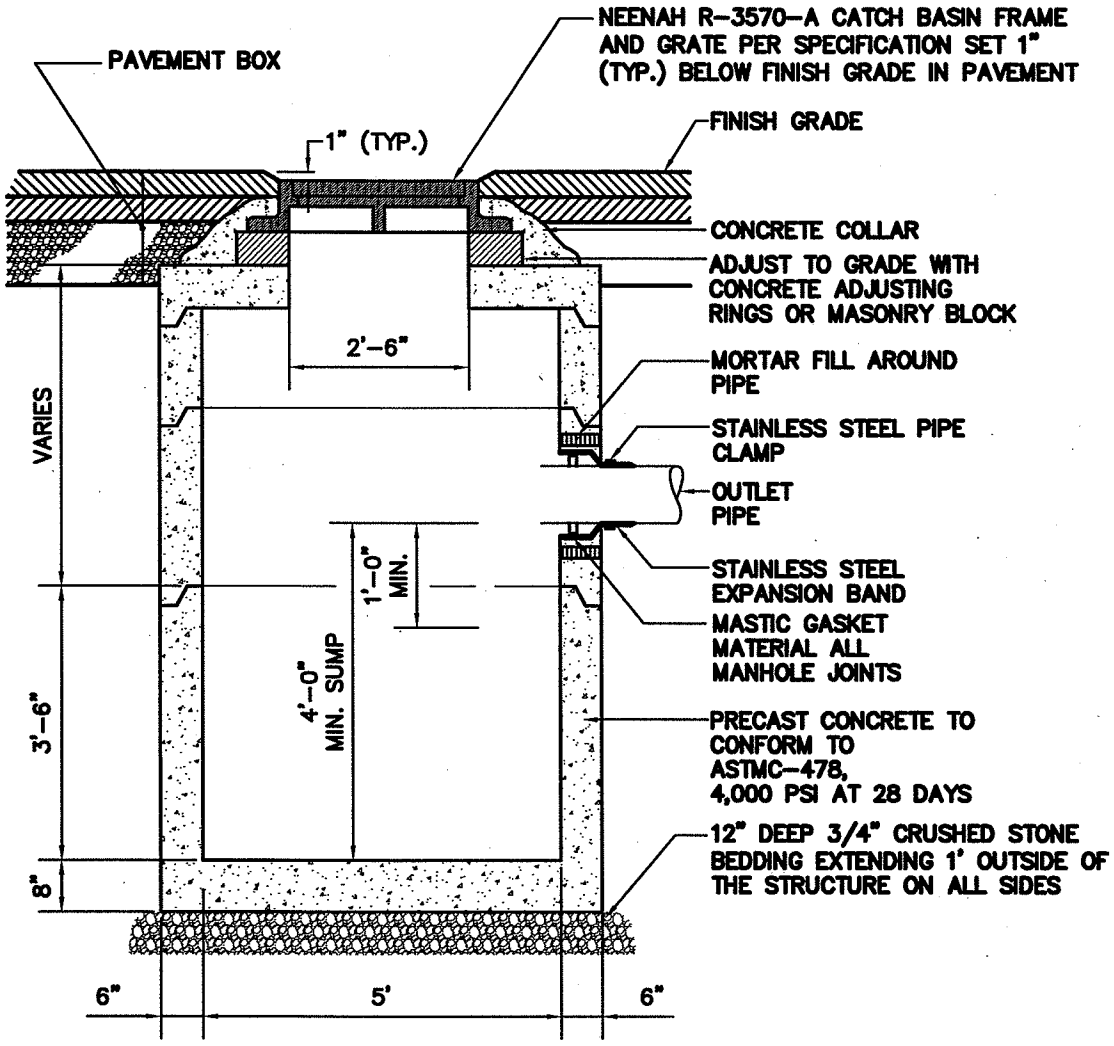

CATCH BASIN NOTES:

1. FOR DRAINAGE LAYOUT SEE DWG. NO. 3.1
2. ALL PREFABRICATED REINFORCED CONCRETE STRUCTURES AND FRAME AND GRATES SHALL BE DESIGNED AND CONSTRUCTED TO SUPPORT A 51,000 LB SINGLE WHEEL LOAD. THE CONTRACTOR IS REQUIRED TO SUBMIT SHOP DRAWINGS AND MANUFACTURER CERTIFICATIONS TO THE ENGINEER FOR REVIEW PRIOR TO INSTALLATION. SHOP DRAWINGS FOR LOADING SHALL BE STAMPED BY A PROFESSIONAL ENGINEER LICENSED IN NEW HAMPSHIRE.

5' DIA. CATCH BASIN DETAIL 1

N.T.S.

CUT ALONG DASHED LINE AND INSERT ONTO APPROPRIATE 'BID SET' PLAN

GRAPHIC SCALE
NS NS NS NS
NO SCALE

GALE
Gale Associates, Inc
Engineers Architects Planners
15 Constitution Drive
Bedford, NH 03110
P 603.471.1887 F 603.471.1809
www.gainc.com
Boston Baltimore Orlando San Francisco

ADDENDUM NO. 1
REVISIONS TO BE INSERTED
ONTO 'BID SET' DWG. NO. C3.2

RECONSTRUCT TOWER APRON (APPROX. 850 LF X 250 LF)
BOIRE FIELD – NASHUA MUNICIPAL AIRPORT – NASHUA, NEW HAMPSHIRE
SBG NO. 12-03-2009

PROJ. NO:	DRAWN	REVIEWED	CADD FILE
776440	NAI	BJH	776440-S11-ADD1

DATE:	MAY 1, 2009
SCALE:	AS SHOWN
REVISION:	ADDENDUM NO. 1

C3.2B

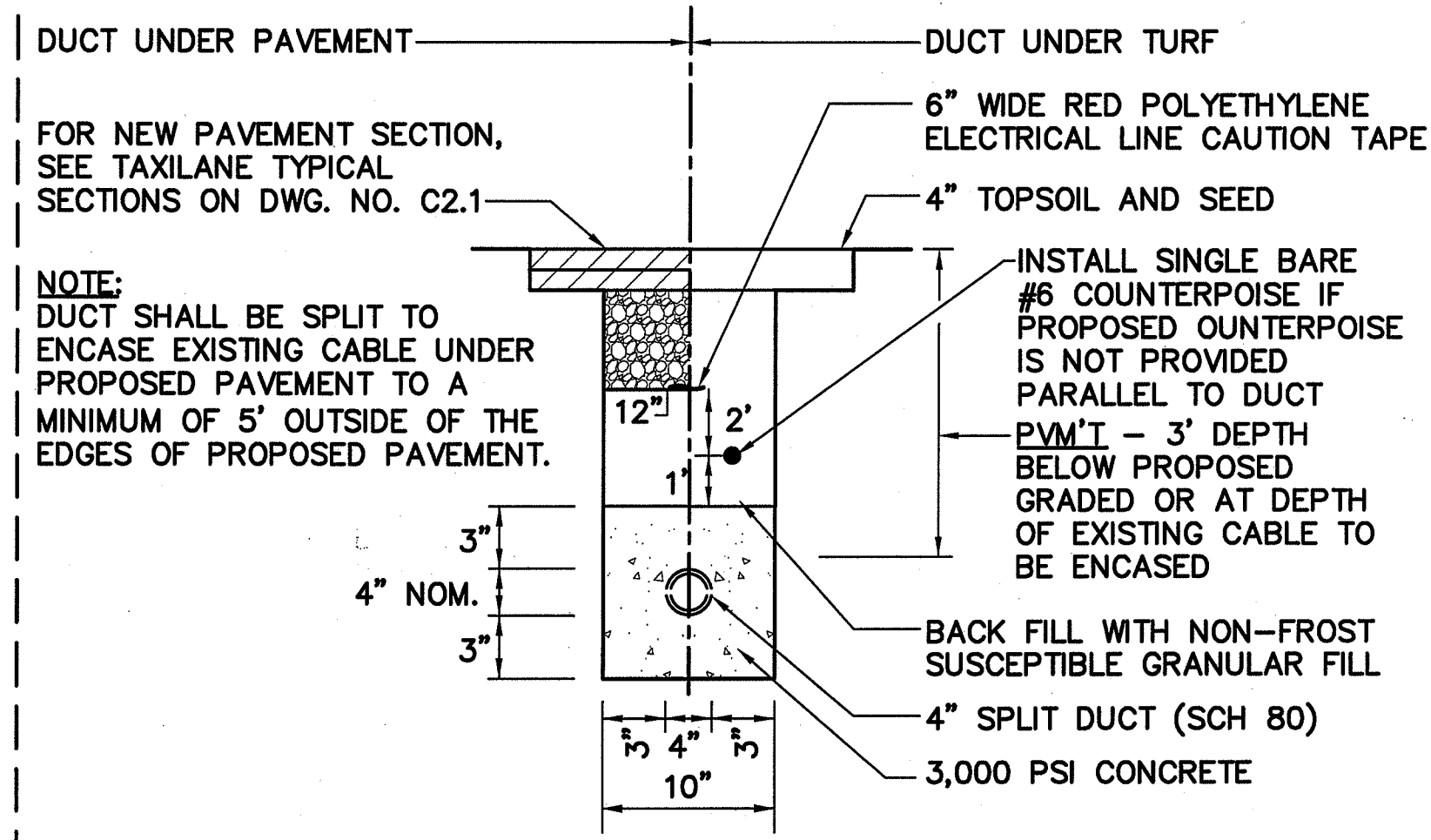

FOR NEW PAVEMENT SECTION, SEE TAXILANE TYPICAL SECTIONS ON DWG. NO. C2.1

NOTE:
DUCT SHALL BE SPLIT TO ENCASE EXISTING CABLE UNDER PROPOSED PAVEMENT TO A MINIMUM OF 5' OUTSIDE OF THE EDGES OF PROPOSED PAVEMENT.

4"– 1 WAY SPLIT CONCRETE ENCASED DUCT DETAIL

1

N.T.S.

CUT ALONG DASHED LINE AND INSERT ONTO APPROPRIATE 'BID SET' PLAN

GRAPHIC SCALE 0 5 10 20 SCALE: 1" = 20'

GALE
Gale Associates, Inc
Engineers Architects Planners
15 Constitution Drive
Bedford, NH 03110
P 603.471.1887 F 603.471.1809
www.gainc.com
Boston Baltimore Orlando San Francisco

ADDENDUM NO. 1
REVISIONS TO BE INSERTED ONTO 'BID SET' DWG. NO. C4.1

RECONSTRUCT TOWER APRON (APPROX. 850 LF X 250 LF)
BOIRE FIELD – NASHUA MUNICIPAL AIRPORT – NASHUA, NEW HAMPSHIRE
SBG NO. 12-03-2009

PROJ. NO:	DRAWN	REVIEWED	CADD FILE
776440	NAI	BJH	776440-S11-ADD1

DATE:	MAY 1, 2009
SCALE:	AS SHOWN
REVISION:	ADDENDUM NO. 1

C4.1A

TEMPORARY TAXIWAY NOTES: 1

1. UPON THE COMPLETION OF THE TOWER APRON, THE CONTRACTOR SHALL REMOVE THE TEMPORARY TAXIWAY AND RESTORE THE DISTURBED AREA TO THE PRE-CONSTRUCTION CONDITIONS OR BETTER. THE REMOVAL OF THE TEMPORARY TAXIWAY, INCLUDING PAVEMENTS AND BASE MATERIALS SHALL BE PAID FOR UNDER ITEM NO. P-152-1. REGRADING OF THE DISTURBED AREAS SHALL BE CONSIDERED INCIDENTAL TO ITEM NO. P-152-1.

2. ALL TEMPORARY PAVEMENT MARKINGS SHALL BE REMOVED AFTER THE TEMPORARY TAXIWAY HAS BEEN REMOVED. THE CONTRACTOR SHALL REMOVE THE TEMPORARY MARKINGS ON EXISTING PAVEMENTS WITH EXTREME CAUTION. ALL DAMAGES TO EXISTING PAVEMENTS IN EXCESS OF THE SPECIFICATIONS TOLERANCES SHALL BE MILLED OUT AND REPAVED TO A DEPTH OF 1 1/2" FOR THE DIMENSIONS OF THE FULL TAXIWAY WIDTH BY 25 FT OUTSIDE OF THE DAMAGED AREAS IN ALL DIRECTIONS. ANY REQUIRED PAVEMENT REPAIRS SHALL BE AT NO ADDITIONAL COSTS TO THE OWNER. REMOVAL OF TEMPORARY MARKINGS SHALL BE CONSIDERED INCIDENTAL TO ITEM NO P-620-2.

3. THE CONTRACTOR SHALL PROTECT ALL EXISTING CABLES AND WIRE UNDER THE PROPOSED TEMPORARY TAXIWAY PAVEMENT SECTION BY CONSTRUCTING A SPLIT DUCT AROUND THE EXISTING CABLES OR WIRES. SEE DETAIL ON THIS SHEET FOR FURTHER INFORMATION. NO SEPARATE MEASURE FOR PAYMENT SHALL BE MADE FOR SPLIT DUCT, BUT RATHER THEY SHALL BE CONSIDERED INCIDENTAL TO ITEM NO. M-006-1.

4. THE CONTRACTOR SHALL REGRADE THE DISTURBED AREA CREATED BY THE REMOVAL OF THE TEMPORARY TAXIWAY TO DRAIN. NO SEPARATE MEASURE SHALL BE MADE FOR THIS EFFORT, BUT RATHER IT SHALL BE CONSIDERED INCIDENTAL TO ITEM NO. P-152-1.

CUT ALONG DASHED LINE AND INSERT ONTO APPROPRIATE 'BID SET' PLAN

GRAPHIC SCALE
0 5 10 20
SCALE: 1" = 20'

GALE
Gale Associates, Inc
Engineers Architects Planners
15 Constitution Drive
Bedford, NH 03110
P 603.471.1887 F 603.471.1809
www.gainc.com
Boston Baltimore Orlando San Francisco

ADDENDUM NO. 1
REVISIONS TO BE INSERTED
ONTO 'BID SET' DWG. NO. C4.1

RECONSTRUCT TOWER APRON (APPROX. 850 LF X 250 LF)
BOIRE FIELD – NASHUA MUNICIPAL AIRPORT – NASHUA, NEW HAMPSHIRE
SBG NO. 12-03-2009

PROJ. NO:	DRAWN	REVIEWED	CADD FILE
776440	NAI	BJH	776440-S11-ADD1

DATE:	MAY 1, 2009
SCALE:	AS SHOWN
REVISION:	ADDENDUM NO. 1

C4.1B

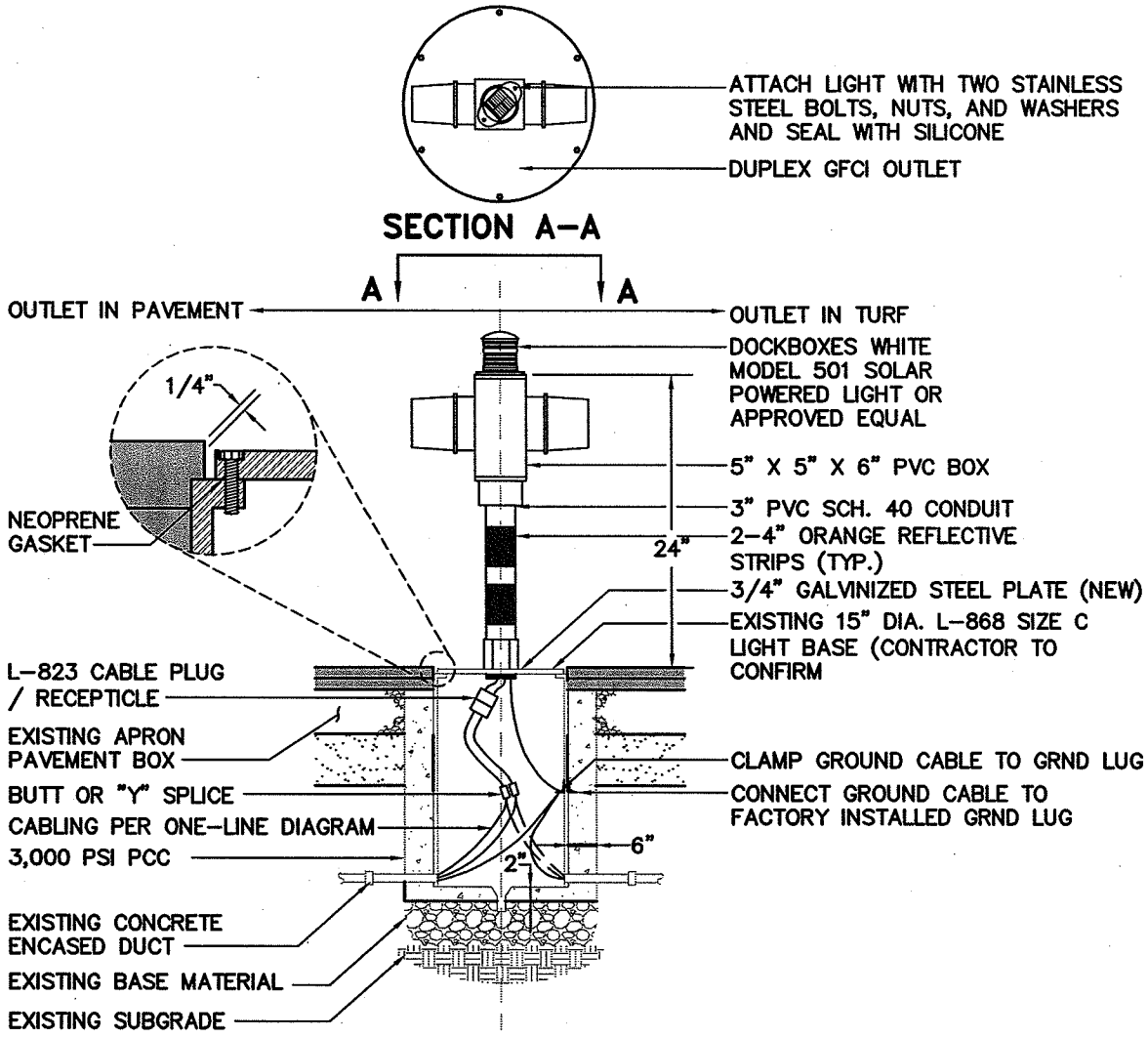

APRON ELECTRICAL OUTLET NOTES:

1. THE SPLICE SHALL BE WATERPROOF CAST RESIN TYPE.
2. THE CABLE PLUG SHALL BE WATERPROOF. IN ADDITION, THE CONTRACTOR SHALL SUPPLY A "DUMMY PLUG" TO COVER CABLE RECEPTICLE WHEN NOT IN USE.
3. THE GROUND LUG(S) ARE TO BE FACTORY INSTALLED ONLY.
4. SUFFICIENT CABLE SLACK SHALL BE PROVIDED IN EACH LIGHT BASE TO ALLOW FOR MAINTENANCE AT PAVEMENT SURFACE.

APRON ELECTRICAL STANCHION DETAIL

N.T.S.

CUT ALONG DASHED LINE AND INSERT ONTO APPROPRIATE 'BID SET' PLAN

GRAPHIC SCALE
0 25 50 100
SCALE: 1" = 100'

GALE
Gale Associates, Inc
Engineers Architects Planners
15 Constitution Drive
Bedford, NH 03110
P 603.471.1887 F 603.471.1809
www.gainc.com
Boston Baltimore Orlando San Francisco

ADDENDUM NO. 1
REVISIONS TO BE INSERTED ONTO 'BID SET' DWG. NO. LI1.3

RECONSTRUCT TOWER APRON (APPROX. 850 LF X 250 LF)
BOIRE FIELD – NASHUA MUNICIPAL AIRPORT – NASHUA, NEW HAMPSHIRE
SBG NO. 12–03–2009

PROJ. NO:	DRAWN	REVIEWED	CADD FILE
776440	NAI	BJH	776440–S11–ADD1

DATE:	MAY 1, 2009
SCALE:	AS SHOWN
REVISION:	ADDENDUM NO. 1

L1.3A

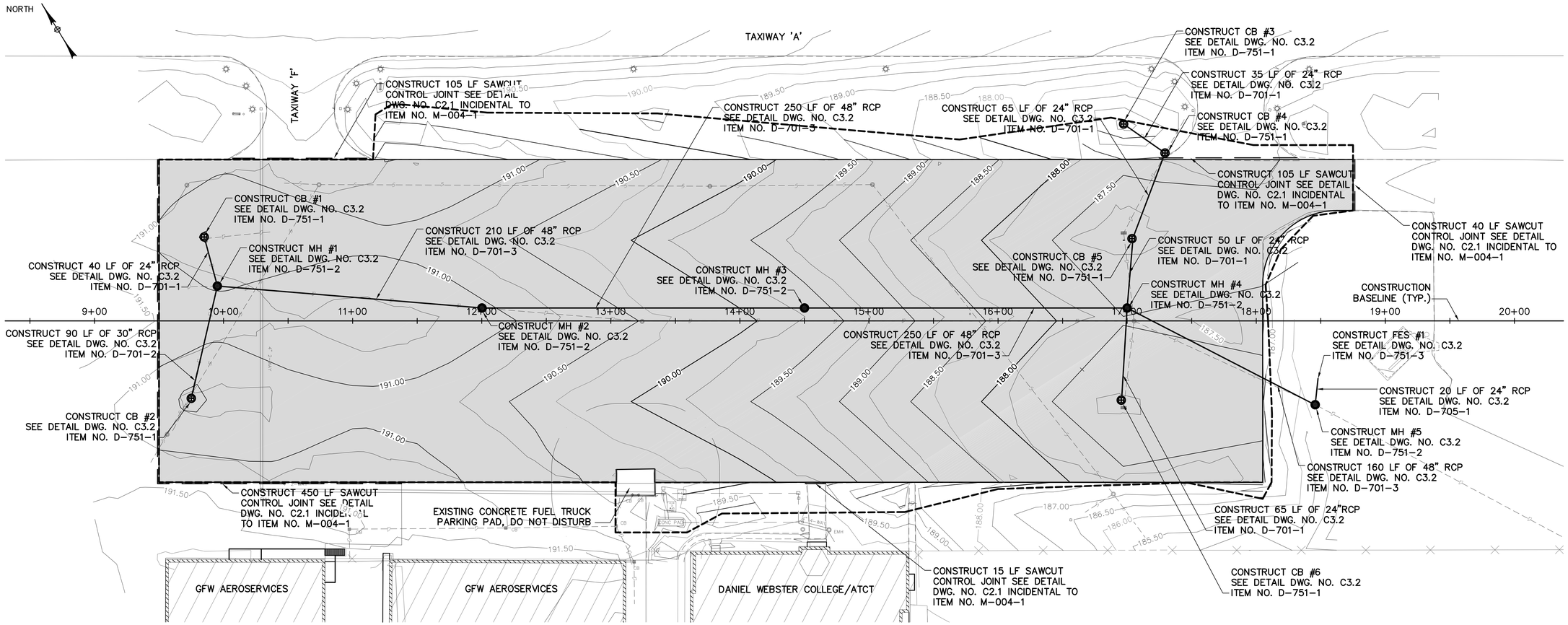

GRADING AND DRAINAGE PLAN

SCALE: 1"=40'

DRAINAGE SCHEDULE

NO.	STRUCTURE	STATION	OFFSET	RIM ELEVATION	INVERT IN ELEVATION	INVERT OUT ELEVATION	ITEM NO.
CB#1	5' DIA. CATCH BASIN	9+85.00	65.00' LT.	190.66'	–	187.74' (12" RCP TO MH#1)	D-751-1
CB#2	5' DIA. DROP INLET	9+75.00	60.00' RT.	190.86'	184.86' (EXISTING 24"RCP)	184.61' (30" RCP TO MH#1)	D-751-4
CB#3	5' DIA. CATCH BASIN	16+97.50	152.50' LT.	186.33'	–	183.33' (24" RCP TO CB#4)	D-751-1
CB#4	5' DIA. CATCH BASIN	17+29.50	130.00' LT.	187.42'	183.10' (24" RCP FROM CB#3) 183.14' (EXISTING 24" CMP)	183.01' (24" RCP TO CB#5)	D-751-1
CB#5	5' DIA. CATCH BASIN	17+04.00	64.00' LT.	186.93'	182.72' (24" RCP FROM CB#4)	182.59' (24" RCP TO MH#3)	D-751-1
CB#6	5' DIA. CATCH BASIN	16+95.50	61.50' RT.	186.95'	–	182.99' (24" RCP TO MH#3)	D-751-1
MH#1	8' DIA. DRAIN MANHOLE	9+95.00	27.00' LT.	191.05'	186.45' (12" RCP FROM CB#1) 183.95' (30" RCP FROM CB#2) 183.85 (EXISTING 48" RCP)	183.85' (48" RCP TO MH#2)	D-751-2
MH#2	8' DIA. DRAIN MANHOLE	12+00.00	10.00' LT	190.79'	182.83' (48" RCP FROM MH#1)	182.73' (48" RCP TO MH#3)	D-751-2
MH#3	8' DIA. DRAIN MANHOLE	14+50.00	10.00' LT	189.48'	181.48' (48" RCP FROM MH#21)	181.38' (48" RCP TO MH#4)	D-751-2
MH#4	8' DIA. DRAIN MANHOLE	17+00.00	10.00' LT.	187.44'	180.77' (48" RCP FROM MH#2) 182.10' (24" RCP FROM CB#6) 181.92' (24" RCP FROM CB#5)	180.65' (48" RCP TO MH#5)	D-751-2
MH#5	8' DIA. DRAIN MANHOLE	18+45.50	65.00' RT.	186.43'	181.85' (24" RCP FROM F.E.S.) 179.95' (48" RCP FROM MH#4)	179.83' (EXISTING 48" RCP)	D-751-2
FES#1	FLARED END SECTION	18+48.00	45.00' RT	–	182.28	–	D-751-3

LEGEND

- RECONSTRUCT TOWER APRON
- CONSTRUCTION BASELINE
- CATCH BASIN
- DRAIN MANHOLE
- REINFORCED CONCRETE PIPE
- APPROXIMATE LIMIT OF REGRADING

GRADING AND DRAINAGE NOTES:

1. FOR GENERAL PLAN NOTES, SEE DWG. NO. G1.2

GALE
Gale Associates, Inc
Engineers Architects Planners
15 Constitution Drive
Bedford, NH 03110
P 603.471.1887 F 603.471.1809
www.gainc.com
Boston Baltimore Orlando San Francisco

This drawing and the design and construction features disclosed are proprietary to Gale Associates, Inc. and shall not be altered or reused in whole or part without the express written permission of Gale Associates, Inc. Copyright ©2009

BID SET

PROJECT
RECONSTRUCT TOWER APRON (APPROX. 850 LF X 250 LF) – BOIRE FIELD – NASHUA, NEW HAMPSHIRE – SBG NO. 12-03-2009

OWNER
BOIRE FIELD
NASHUA MUNICIPAL AIRPORT
NASHUA, NEW HAMPSHIRE

NO.	DATE	DESCRIPTION	BY
1	5-04-09	ADDENDUM 1	BJH

PROJECT NO.	776440
CADD FILE	776440/DWG'S
DESIGNED BY	NAI
DRAWN BY	NAI
CHECKED BY	BJH
DATE	APRIL 22, 2009
DRAWING SCALE	1"=40'

GRAPHIC SCALE
0 20 40 80
SCALE: 1" = 40'

SHEET TITLE
GRADING AND DRAINAGE PLAN

DRAWING NO.
C3.1

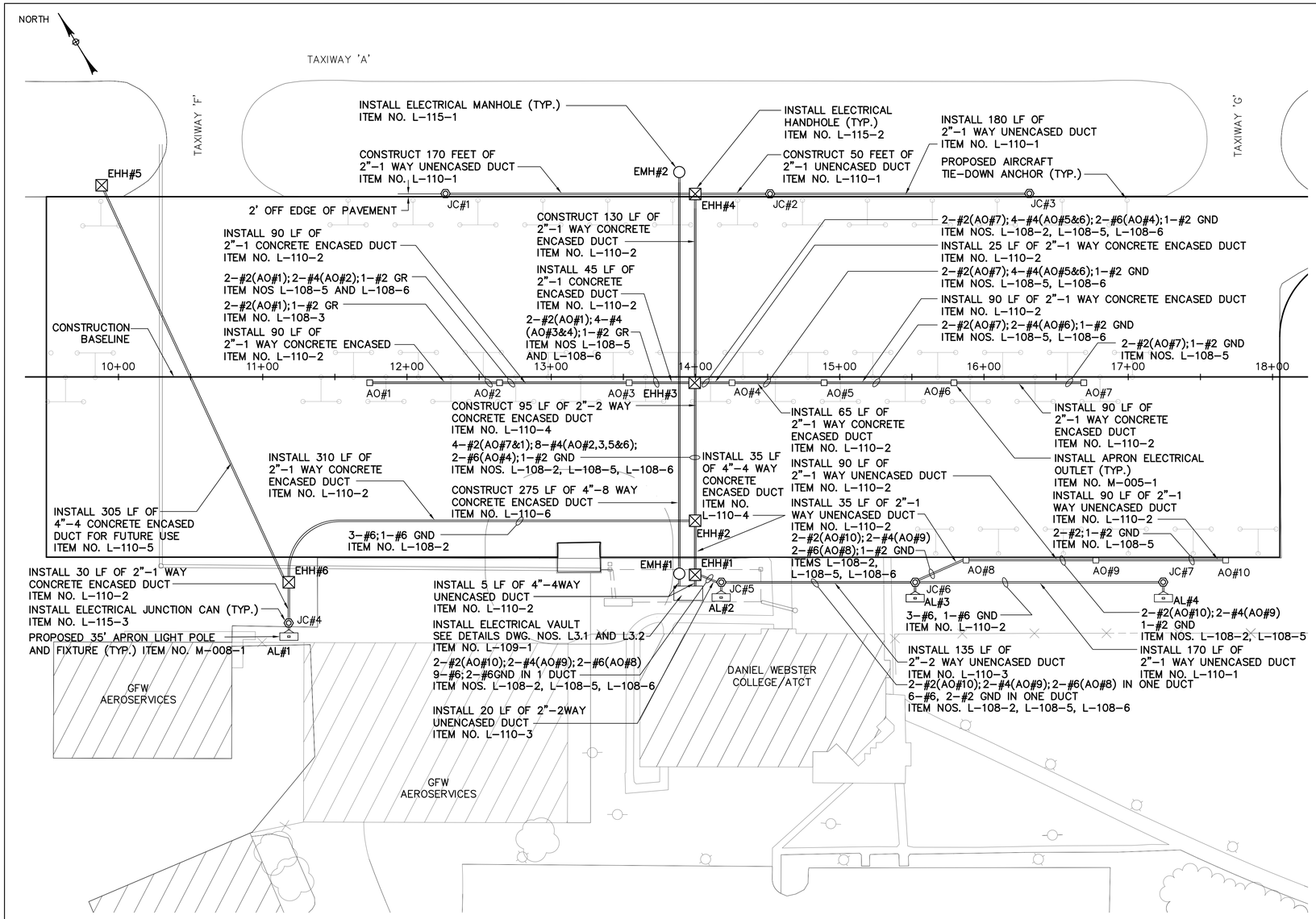

ELECTRICAL LAYOUT PLAN

SCALE: 1"=40'

LEGEND

	CONSTRUCTION BASELINE
	UNDERGROUND ELECTRICAL DUCT BANK
AO#1	APRON ELECTRICAL OUTLET
EHH#1	ELECTRICAL HANDHOLE
EMH#1	ELECTRICAL MANHOLE
JC#1	ELECTRICAL JUNCTION CAN
	APRON LIGHT POLE AND FIXTURE

ELECTRICAL NOTES:

1. ALL CONDUIT, WIRING AND ELECTRICAL EQUIPMENT SHALL BE INSTALLED AND GROUNDED IN ACCORDANCE WITH THE LATEST NATIONAL AND NEW HAMPSHIRE ELECTRICAL CODES, NATIONAL FIRE PROTECTION ASSOCIATION, AMERICAN WITH DISABILITIES ACT (ADA) AND ANY APPLICABLE LOCAL REGULATIONS.

2. ALL CONDUITS, FIXTURES AND OUTLETS ARE SHOWN DIAGRAMMATICALLY. EXACT LOCATION AND METHOD OF SUPPORT SHALL BE DETERMINED IN THE FIELD, EXCEPT WHERE SPECIFIC DIMENSIONS AND DETAILS ARE SHOWN.

3. THE CONTRACTOR SHALL VISIT THE SITE AND EXAMINE CONDITIONS UNDER WHICH WORK MUST BE PERFORMED PRIOR TO BIDDING AND PRIOR TO THE START OF WORK. BY COMMENCING WORK, IT SHALL BE ASSUMED THAT THE CONTRACTOR HAS COMPLETELY ACCEPTED THE EXISTING CONDITIONS INCLUDING PREPARATORY WORK DONE BY OTHERS.

4. THE CONTRACTOR SHALL GIVE NOTICES, FILE PLANS, OBTAIN PERMITS AND LICENSES, PAY FEES AND BACK CHARGES, AND OBTAIN NECESSARY APPROVALS FROM AUTHORITIES THAT HAVE LAWFUL JURISDICTION.

5. THE CONTRACTOR SHALL PERFORM WORK AS REQUIRED BY REGULATIONS AND LAWS OF LOCALS, STATE AND FEDERAL GOVERNMENTS AND OTHER AUTHORITIES WITH LAWFUL JURISDICTION.

6. THE CONTRACTOR SHALL SCHEDULE AND PERFORM ALL WORK IN SEQUENCE TO MINIMIZE DOWN TIME OF ALL EXISTING SYSTEMS. TAKING EXISTING SYSTEMS OUT OF SERVICE SHALL ONLY BE DONE WITH THE ENGINEER'S APPROVAL. REQUEST APPROVAL NOT LESS THAN 72 HOURS IN ADVANCE OF DESIRED SYSTEM OUTAGE.

7. FOR DEMOLITION, SEE SHEET D1.1.

8. FOR GENERAL PLAN NOTES, SEE DWG. NO. G1.2.

9. FOR GENERAL PLAN AND SAFETY DETAILS. SEE DWG. NO. S1.1.

10. FOR DETAILS ON LIGHT FIXTURES, DUCT BANKS, ELECTRICAL STRUCTURES, AND EQUIPMENT, SEE DWG. NO. L2.1.

11. THE LOCATIONS SHOWN FOR ALL EXISTING CABLES ARE APPROXIMATE ONLY. THE CONTRACTOR SHALL USE EXTREME CAUTION AT ALL TIMES TO AVOID DAMAGING EXISTING CABLES. ALL CABLES ARE TO BE LOCATED BY THE CONTRACTOR PRIOR TO THE START OF CONSTRUCTION. THERE MAY BE EXISTING CABLES THAT ARE NOT LOCATED ON THE PLANS THAT ARE EITHER ACTIVE OR ABANDONED IN PLACE. THE CONTRACTOR SHALL IDENTIFY AND LOCATE THESE CABLES AND VERIFY THEIR CONDITION. THE CONTRACTOR SHALL RECORD ALL PERTINENT INFORMATION ON THE "AS-BUILT DRAWINGS".

12. ALL FIELD CONNECTIONS SHALL BE WATERTIGHT ACCORDING TO THE CONTRACT SPECIFICATIONS.

APRON STRUCTURE SCHEDULE

NO.	STATION	OFFSET	DESCRIPTION	ITEM NO.
EHH#1	14+00.00	137.00' RT.	ELECTRICAL HANDHOLE	L-115-2
EHH#2	14+00.00	100.00' RT.	ELECTRICAL HANDHOLE	L-115-2
EHH#3	14+00.00	4.00' RT.	ELECTRICAL HANDHOLE	L-115-2
EHH#4	14+00.00	127.00' LT.	ELECTRICAL HANDHOLE	L-115-2
EHH#5	9+88.00	133.00' LT.	ELECTRICAL HANDHOLE	L-115-2
EHH#6	11+18.00	142.00' RT.	ELECTRICAL HANDHOLE	L-115-2
EMH#1	13+89.00	137.00' RT.	ELECTRICAL MANHOLE	L-115-1
EMH#2	13+89.00	142.00' LT.	ELECTRICAL MANHOLE	L-115-1
JC#1	12+27.00	127.00' LT.	ELECTRICAL JUNCTION CAN	L-115-3
JC#2	14+52.00	127.00' LT.	ELECTRICAL JUNCTION CAN	L-115-3
JC#3	16+32.00	127.00' LT.	ELECTRICAL JUNCTION CAN	L-115-3
JC#4	11+18.00	170.00' RT.	ELECTRICAL JUNCTION CAN	L-115-3
JC#5	14+18.00	143.00 RT.	ELECTRICAL JUNCTION CAN	L-115-3
JC#6	15+52.00	143.00 RT.	ELECTRICAL JUNCTION CAN	L-115-3
JC#7	17+24.00	143.00 RT.	ELECTRICAL JUNCTION CAN	L-115-3

APRON OUTLET SCHEDULE

NO.	STATION	OFFSET	ITEM NO.
AO#1	11+74.00	4.00' RT.	M-005-1
AO#2	12+64.00	4.00' RT.	M-005-1
AO#3	13+54.00	4.00' RT.	M-005-1
AO#4	14+25.00	4.00' RT.	M-005-1
AO#5	14+89.00	4.00' RT.	M-005-1
AO#6	15+79.00	4.00' RT.	M-005-1
AO#7	16+69.00	4.00' RT.	M-005-1
AO#8	15+88.00	127.00' RT.	M-005-1
AO#9	16+78.00	127.00' RT.	M-005-1
AO#10	17+68.00	127.00' RT.	M-005-1

APRON LIGHT POLE SCHEDULE

NO.	STATION	OFFSET	ITEM NO.
AL#1	11+18.00	180.00' RT.	M-008-1
AL#2	14+18.00	153.00' RT.	M-008-1
AL#3	15+52.00	153.00' RT.	M-008-1
AL#4	14+24.00	153.00' RT.	M-008-1

GALE
Gale Associates, Inc
Engineers Architects Planners
15 Constitution Drive
Bedford, NH 03110
P 603.471.1887 F 603.471.1809
www.gainc.com
Boston Baltimore Orlando San Francisco

This drawing and the design and construction features disclosed are proprietary to Gale Associates, Inc. and shall not be altered or reused in whole or part without the express written permission of Gale Associates, Inc. Copyright ©2009

BID SET

PROJECT
RECONSTRUCT TOWER APRON (APPROX. 850 LF X 250 LF) - BOIRE FIELD - NASHUA, NEW HAMPSHIRE - SBG NO. 12-03-2009

OWNER
BOIRE FIELD
NASHUA MUNICIPAL AIRPORT
NASHUA, NEW HAMPSHIRE

NO.	DATE	DESCRIPTION	BY

PROJECT NO.	776440
CADD FILE	776440/DWG'S
DESIGNED BY	NAI
DRAWN BY	NAI
CHECKED BY	BJH
DATE	APRIL 22, 2009
DRAWING SCALE	1"=40'

GRAPHIC SCALE
0 20 40 80
SCALE: 1" = 40'

SHEET TITLE
ELECTRICAL LAYOUT PLAN

DRAWING NO.
L1.1

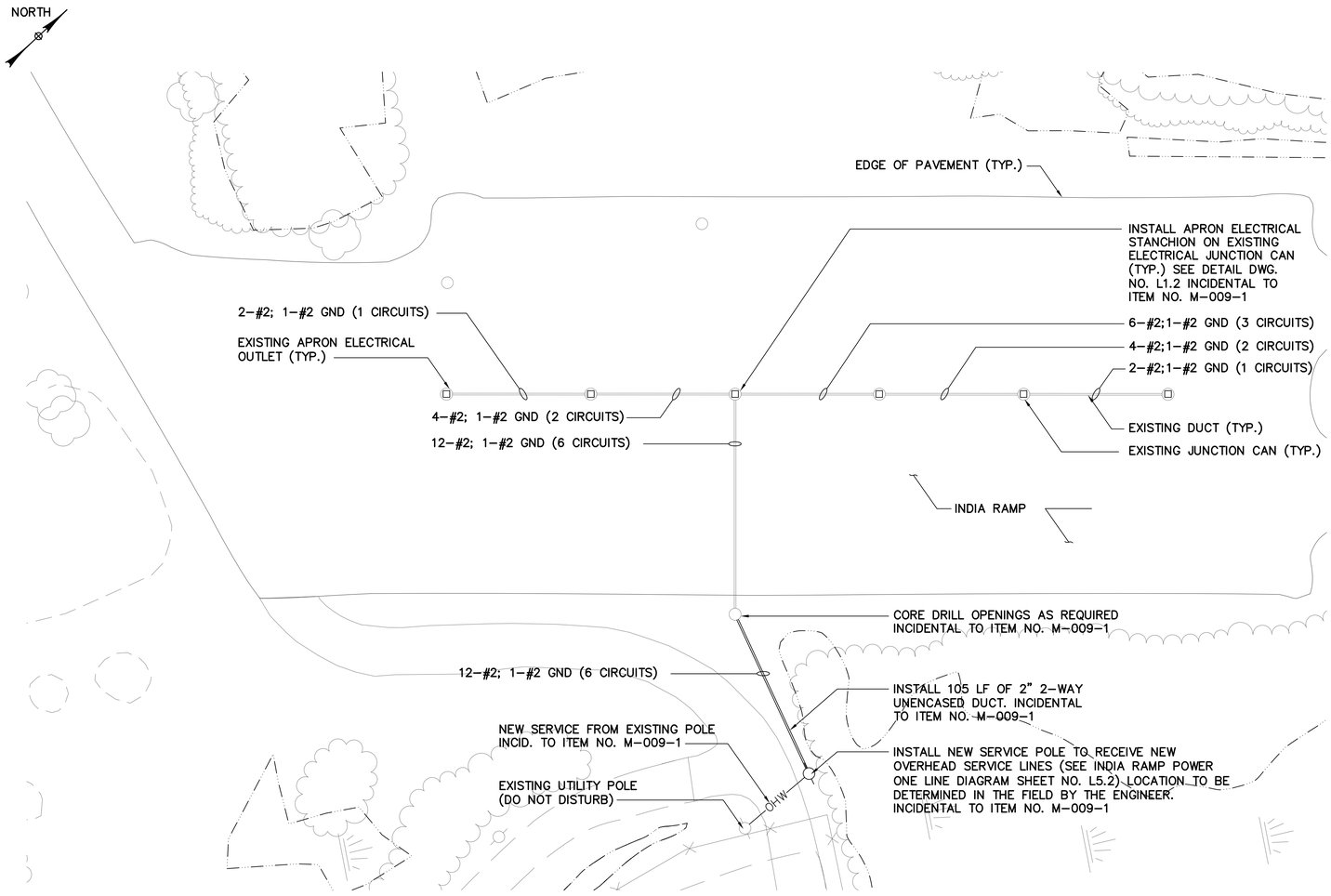

ELECTRICAL LAYOUT PLAN

SCALE: 1"=40'

LEGEND

	CONSTRUCTION BASELINE
	UNDERGROUND ELECTRICAL DUCT BANK
	APRON ELECTRICAL STANCHION OUTLET ON EXISTING JUNCTION CAN
	ELECTRICAL HANDHOLE
EMH 1	ELECTRICAL MANHOLE
	ELECTRICAL JUNCTION CAN

ELECTRICAL NOTES:

1. ALL CONDUIT, WIRING AND ELECTRICAL EQUIPMENT SHALL BE INSTALLED AND GROUNDED IN ACCORDANCE WITH THE LATEST NATIONAL AND NEW HAMPSHIRE ELECTRICAL CODES, NATIONAL FIRE PROTECTION ASSOCIATION, AMERICAN WITH DISABILITIES ACT (ADA) AND ANY APPLICABLE LOCAL REGULATIONS.

2. ALL CONDUITS, FIXTURES AND OUTLETS ARE SHOWN DIAGRAMMATICALLY. EXACT LOCATION AND METHOD OF SUPPORT SHALL BE DETERMINED IN THE FIELD, EXCEPT WHERE SPECIFIC DIMENSIONS AND DETAILS ARE SHOWN.

3. THE CONTRACTOR SHALL VISIT THE SITE AND EXAMINE CONDITIONS UNDER WHICH WORK MUST BE PERFORMED PRIOR TO BIDDING AND PRIOR TO THE START OF WORK. BY COMMENCING WORK, IT SHALL BE ASSUMED THAT THE CONTRACTOR HAS COMPLETELY ACCEPTED THE EXISTING CONDITIONS INCLUDING PREPARATORY WORK DONE BY OTHERS.

4. THE CONTRACTOR SHALL GIVE NOTICES, FILE PLANS, OBTAIN PERMITS AND LICENSES, PAY FEES AND BACK CHARGES, AND OBTAIN NECESSARY APPROVALS FROM AUTHORITIES THAT HAVE LAWFUL JURISDICTION.

5. THE CONTRACTOR SHALL PERFORM WORK AS REQUIRED BY REGULATIONS AND LAWS OF LOCALS, STATE AND FEDERAL GOVERNMENTS AND OTHER AUTHORITIES WITH LAWFUL JURISDICTION.

6. FOR GENERAL PLAN NOTES, SEE DWG. NO. G1.2.

10. FOR DETAILS ON LIGHT FIXTURES, DUCT BANKS, ELECTRICAL STRUCTURES, AND EQUIPMENT, SEE DWG. NO. L2.1.

7. THE CONTRACTOR SHALL USE EXTREME CAUTION AT ALL TIMES TO AVOID DAMAGING EXISTING CABLES. ALL CABLES ARE TO BE LOCATED BY THE CONTRACTOR PRIOR TO THE START OF CONSTRUCTION. THERE MAY BE EXISTING CABLES THAT ARE NOT LOCATED ON THE PLANS THAT ARE EITHER ACTIVE OR ABANDONED IN PLACE. THE CONTRACTOR SHALL IDENTIFY AND LOCATE THESE CABLES AND VERIFY THEIR CONDITION. THE CONTRACTOR SHALL RECORD ALL PERTINENT INFORMATION ON THE "AS-BUILT DRAWINGS".

8. ALL FIELD CONNECTIONS SHALL BE WATERTIGHT ACCORDING TO THE CONTRACT SPECIFICATIONS.

9. ALL WORK SHOWN ON THIS PLAN SHALL BE PERFORMED AS PART OF ADDITIVE ALTERNATE NO. 1.

10. ALL ELECTRICAL CONDUITS INSTALLED TO POWER THE ELECTRICAL OUTLETS ON INDIA RAMP SHALL NOT BE MEASURED SEPARATELY FOR PAYMENT BUT RATHER SHALL BE CONSIDERED INCIDENTAL TO ITEM M-009-1.

GALE
Gale Associates, Inc
Engineers Architects Planners
15 Constitution Drive
Bedford, NH 03110
P 603.471.1887 F 603.471.1809
www.gainc.com
Boston Baltimore Orlando San Francisco

This drawing and the design and construction features disclosed are proprietary to Gale Associates, Inc. and shall not be altered or reused in whole or part without the express written permission of Gale Associates, Inc. Copyright ©2009

BID SET

PROJECT
RECONSTRUCT TOWER APRON (APPROX. 850 LF X 250 LF) - BOIRE FIELD - NASHUA, NEW HAMPSHIRE - SBG NO. 12-03-2009

OWNER
BOIRE FIELD
NASHUA MUNICIPAL AIRPORT
NASHUA, NEW HAMPSHIRE

NO.	DATE	DESCRIPTION	BY

PROJECT NO.	776440
CADD FILE	776440/DWG'S
DESIGNED BY	NAI
DRAWN BY	NAI
CHECKED BY	BJH
DATE	APRIL 22, 2009
DRAWING SCALE	1"=40'

GRAPHIC SCALE
0 20 40 80
SCALE: 1" = 40'

SHEET TITLE
ELECTRICAL LAYOUT PLAN (INDIA RAMP)

DRAWING NO.
L1.2

X OF 29

PANEL "MDP" CIRCUIT SCHEDULE

SURFACE MOUNTED (NEW VAULT), 400 AMP MAIN LUG ONLY
208/120 VOLT, 3 PHASE, 4 WIRE, 60 HERTZ
RATING 30,000 AC, 4–500kcmil, 1–#1/0 GR.

CIRCUIT NO.	BREAKER	NO. POLES	DESCRIPTION	LOAD (kVA)
1,3	150	2	T/W 'A' REGULATOR 20kW	20
2,4	150	2	R/W 14–32 REGULATOR 20kW	20
5,7	30	2	NEW VAULT HVAC	4
6,8	150	2	SPARE (NEW REGULATOR)	–
9	20	1	NEW VAULT RECEPTACLES	0.8
10	20	1	NEW VAULT LIGHTS	0.5
11,12	20	2	APRON LIGHTING CONTACTOR #1	–
13,14	20	2	APRON LIGHTING CONTACTOR #2	–
15	20	1	APRON LIGHTING CONTROLLER	–
16,17	200	1	PANEL 'AO'	–
19–41	–	–	SPARE	–
18–42	–	–	SPARE	–

PANEL "AO" CIRCUIT SCHEDULE

SURFACE MOUNTED (NEMA 3R: EXTERIOR OF VAULT), 200 AMP MAIN CIRCUIT BREAKER, 120/240 VOLT, 1 PHASE, 3 WIRE, 60 HERTZ
3–#3/0 GR. 1–#6 GND.

CIRCUIT NO.	BREAKER	NO. POLES	DESCRIPTION	LOAD (kVA)
1	20 GFCI	1	APRON OUTLET #1	–
2	20 GFCI	1	APRON OUTLET #2	–
3	20 GFCI	1	APRON OUTLET #3	–
4	20 GFCI	1	APRON OUTLET #4	–
5	20 GFCI	1	APRON OUTLET #5	–
6	20 GFCI	1	APRON OUTLET #6	–
7	20 GFCI	1	APRON OUTLET #7	–
8	20 GFCI	1	APRON OUTLET #8	–
9	20 GFCI	1	APRON OUTLET #9	–
10	20 GFCI	1	APRON OUTLET #10	–
11	20 GFCI	1	SPARE	–
12	20 GFCI	1	SPARE	–
13–41	–	–	SPARE	–
14–42	–	–	SPARE	–

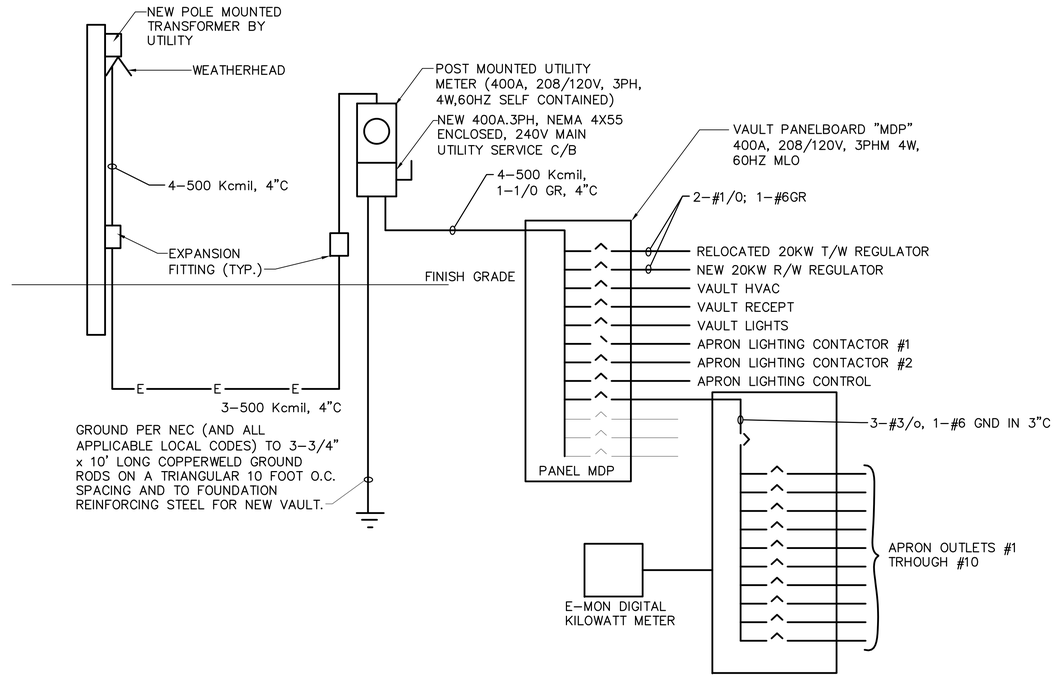

POWER ONE–LINE DIAGRAM

N.T.S.

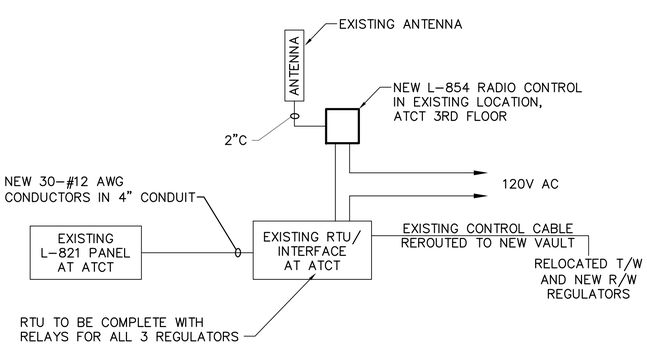

INTERCONNECTION OF REGULATOR CONTROLS

N.T.S.

NOTES:

1. TIME DELAY RELAY:
   ALLEN BRADLEY, SQUARE D OR EQUAL, NEMA 1 ENCLOSED, FIELD LOCATE WITH ENGINEER INSIDE VAULT.
2. TIMED OPERATION:
   NEMA 3R, MOMENTARY, 10A@120V CONTACTS, FIELD LOCATE WITH ENGINEER ON EXTERIOR OF VAULT.
3. PHOTOELECTRIC SWITCH:
   FAA APPROVED, FIELD LOCATE WITH ENGINEER ON EXTERIOR OF VAULT.
4. LIGHTING CONTACTOR:
   ALLEN BRADLEY, BULLETIN 500L;3 POLE, 30A RATED, 120V AC CONTROL OR SQUARE D EQUAL. NEMA 1 ENCLOSED, FIELD LOCATE WITH ENGINEER INSIDE VAULT.
5. TIME CLOCK:
   PARAGON OR APPROVED EQUAL, NEMA 1 ENCLOSED, WITH BATTERY POWERED 100 HOUR CARRY OVER, SEVEN DAY WITH 365 DAY CALENDAR AND AUTOMATIC DAYLIGHT SAVINGS TIME, LEAP YEAR, ETC... CORRECTIONS. FIELD LOCATE WITH ENGINEER INSIDE VAULT.

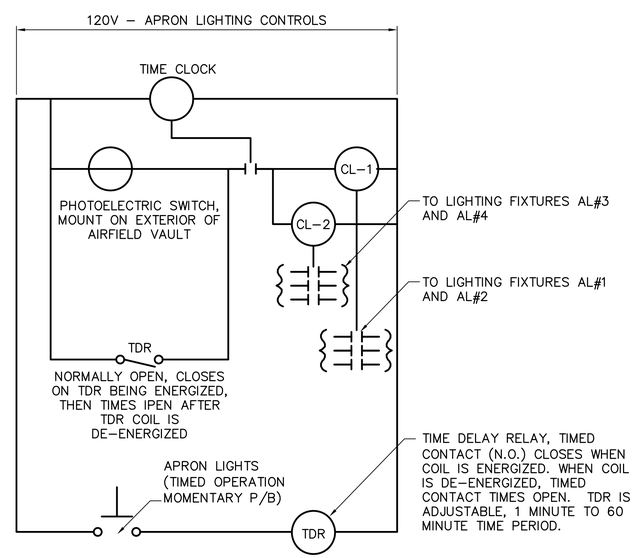

APRON LIGHTING CONTROL TYPICAL WIRING DIAGRAM

N.T.S.

GALE

Gale Associates, Inc
Engineers Architects Planners

15 Constitution Drive
Bedford, NH 03110
P 603.471.1887 F 603.471.1809
www.gainc.com

Boston Baltimore Orlando San Francisco

This drawing and the design and construction features disclosed are proprietary to Gale Associates, Inc. and shall not be altered or reused in whole or part without the express written permission of Gale Associates, Inc. Copyright ©2009

BID SET

PROJECT
RECONSTRUCT TOWER APRON (APPROX. 850 LF X 250 LF) – BOIRE FIELD – NASHUA, NEW HAMPSHIRE – SBG NO. 12–03–2009

OWNER
BOIRE FIELD
NASHUA MUNICIPAL AIRPORT
NASHUA, NEW HAMPSHIRE

NO.	DATE	DESCRIPTION	BY
1	5–04–09	ADDENDUM 1	BJH

PROJECT NO.	776440
CADD FILE	776440/DWG'S
DESIGNED BY	NAI
DRAWN BY	NAI
CHECKED BY	BJH
DATE	APRIL 22, 2009
DRAWING SCALE	NO SCALE

GRAPHIC SCALE
0

SHEET TITLE

VAULT DETAILS (SHEET 2 OF 2)

DRAWING NO.

L3.2