New Hampshire Department of Transportation

IN-DEPTH INSPECTION AND CONDITION REPORT FOR THE SARAH MILDRED LONG BRIDGE OVER THE PISCATAQUA RIVER

251/108

December 2009

PREPARED BY:

HDR Engineering, Inc.
695 Atlantic Ave 2FL
Boston, MA 02111

Hoyle, Tanner & Associates, Inc.
150 Dow Street
Manchester, NH 03101

STATE OF NEW HAMPSHIRE
LORETTA GIRARD DOUGHTY
No. 08820
LICENSED PROFESSIONAL ENGINEER

12-21-09

VOLUME 1 OF 2

TABLE OF CONTENTS

VOLUME 1 OF 2

SECTION

LOCATION MAP	1
DESCRIPTION OF BRIDGE	2
BRIDGE ELEVATION	3
BRIDGE ELEVATION – TRUSS SPANS	4
BRIDGE FRAMING PLAN – ROADWAY APPROACH SPANS 1-13	5
BRIDGE FRAMING PLAN – ROADWAY APPROACH SPANS 14, 15 AND 21-27	6
TYPICAL BRIDGE FRAMING PLAN – ROADWAY APPROACH SPANS 1-13, 24-27	7
TYPICAL BRIDGE FRAMING PLAN – ROADWAY APPROACH SPANS 14, 15, 21-23	8
TYPICAL BRIDGE FRAMING PLAN – TRUSS SPANS	9
TYPICAL BRIDGE FRAMING PLAN – TOWER ELEVATION	10
TYPICAL BRIDGE FRAMING PLAN – RAILROAD APPROACH SPANS	11
TYPICAL BRIDGE CROSS SECTION – ROADWAY APPROACH SPANS	12
TYPICAL BRIDGE CROSS SECTION – TRUSS SPANS	13
TYPICAL BRIDGE RAILROAD DECK CROSS SECTION	14
CROSS SECTION – RETRACTABLE RAILROAD APPROACH SPAN 21	15
INSPECTION FINDINGS	16
FRACTURE CRITICAL INSPECTION	35

APPENDIX A – INSPECTION FORMS

APPENDIX B – PHOTOS

APPENDIX C – CONDITION SUMMARY TABLES AND SKETCHES

VOLUME 2 OF 2

REPORTS

PIN INSPECTION TECHNICAL REPORT

UNDERWATER INSPECTION REPORT

CONCRETE CHARACTERIZATION AND CONDITION ASSESSMENT

MECHANICAL AND ELECTRICAL INSPECTION REPORT

LOCATION MAP

N

DESCRIPTION OF BRIDGE

Date of Construction:	**1940**
Original Design Loading:	**H20 Highway Loading – with 1.65 lanes considered per truss.**
	Cooper E-72 Railroad Loading
Bridge Type:	**Tower Driven Vertical Lift Bridge; Comprised of 5 double-deck truss spans and 22 steel girder approach spans of which 5 spans are double-deck. The deck is reinforced concrete for upper level highway and open timber tie deck for lower level railroad.**
Skew:	**0°**
Spans:	**5 truss spans, 22 approach spans for highway level; 5 truss spans, 5 approach spans for railroad**
Width of Highway Bridge Deck:	**30'-0" between curbs for highway**
	10'-0" between ends of timber ties for railroad
Roadway Surface:	**Monolithic concrete**
Sidewalk/Walkway/Median:	**Monolithic concrete**
Bridge Railing:	**Steel pipe rail along sidewalk**
Approach Railing:	**Steel pipe rail along sidewalk**
Superstructure:	**5 double-deck main truss spans with a vertical lift span in center. Stringers supported by floorbeams at truss panel points for both upper and lower decks.**
	15 steel girder south approach spans with 2 spans of double-deck and 7 steel girder north approach spans with 3 spans of double-deck and one retractable span for railroad.
	2 towers adjacent to the lift span. Stringers supported by floorbeams for both upper and lower deck systems.
Modifications to Original Superstructure:	**Lower level railroad span at Span 21 was modified to a retractable span in 1965; Upper level highway deck was repaired and an overlay was placed in 1987; Expansion bearings were modified, operator house was expanded and electrical and maintenance enclosure was added in 1988.**
Utilities:	**Various electric conduits along the structure from both ends of the bridge (for bridge service only).**
Substructure:	**Reinforced concrete piers and abutments with stone masonry fascia in tidal zone and steel pier bents at Piers 13 and 14, and supporting the north approach spans.**
Modifications to Original Substructure:	**None**

BRIDGE ELEVATION

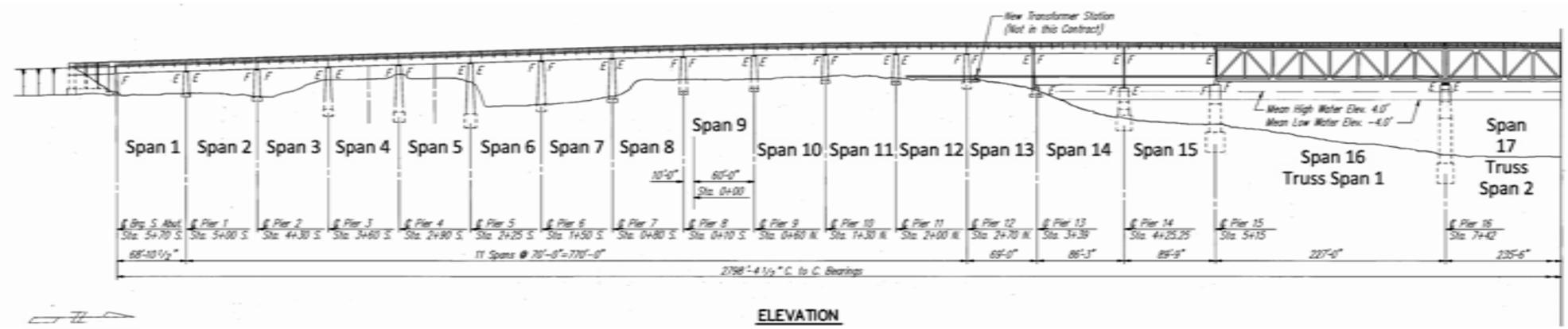

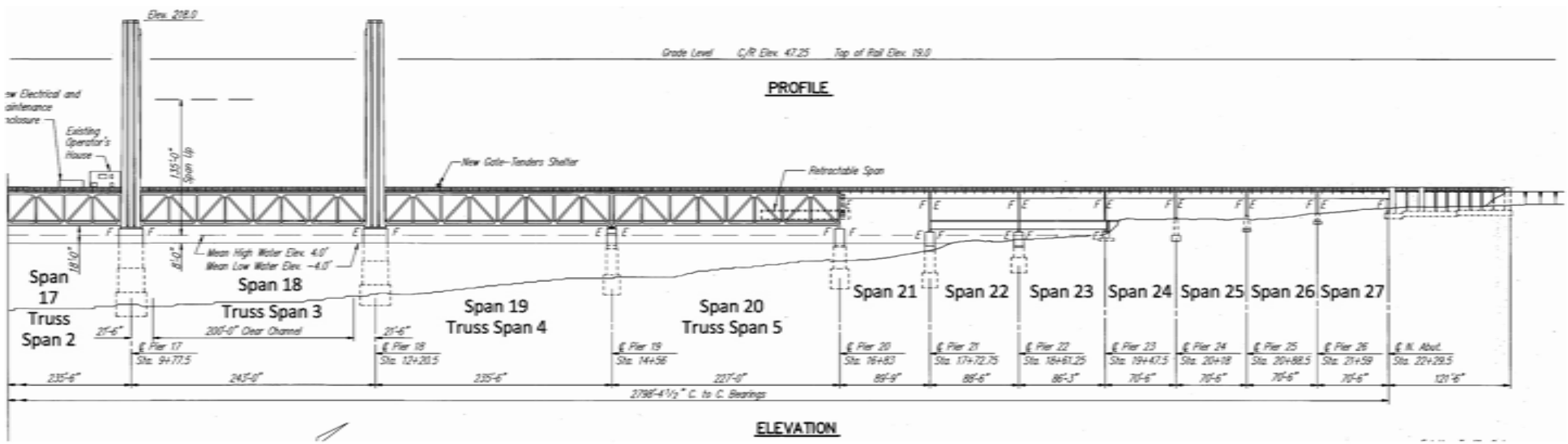

BRIDGE ELEVATION – TRUSS SPANS

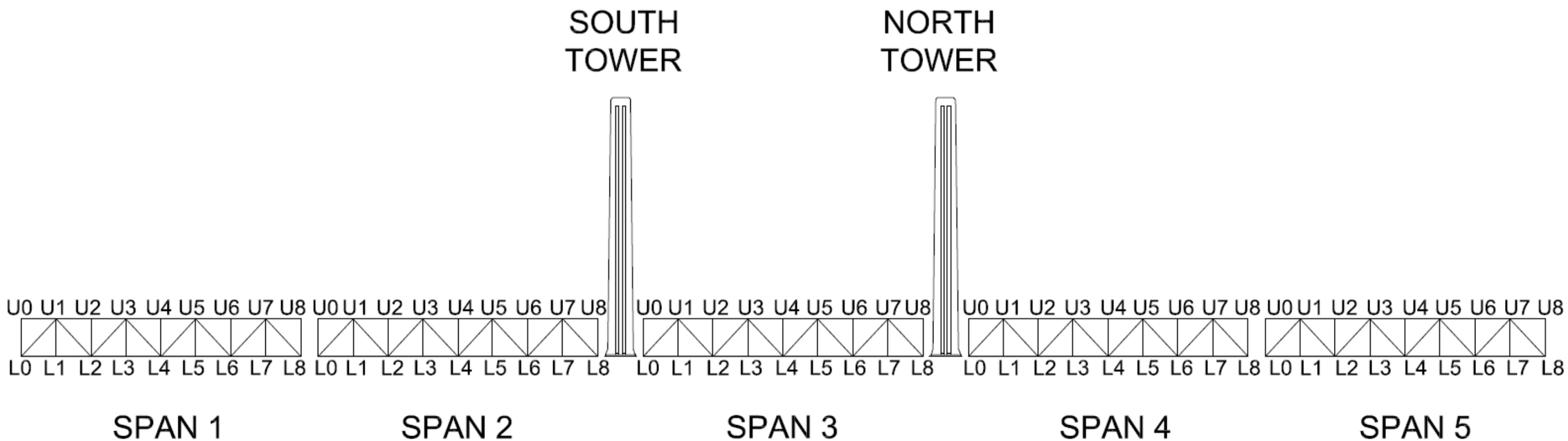

BRIDGE FRAMING PLAN – ROADWAY APPROACH SPANS 1-13

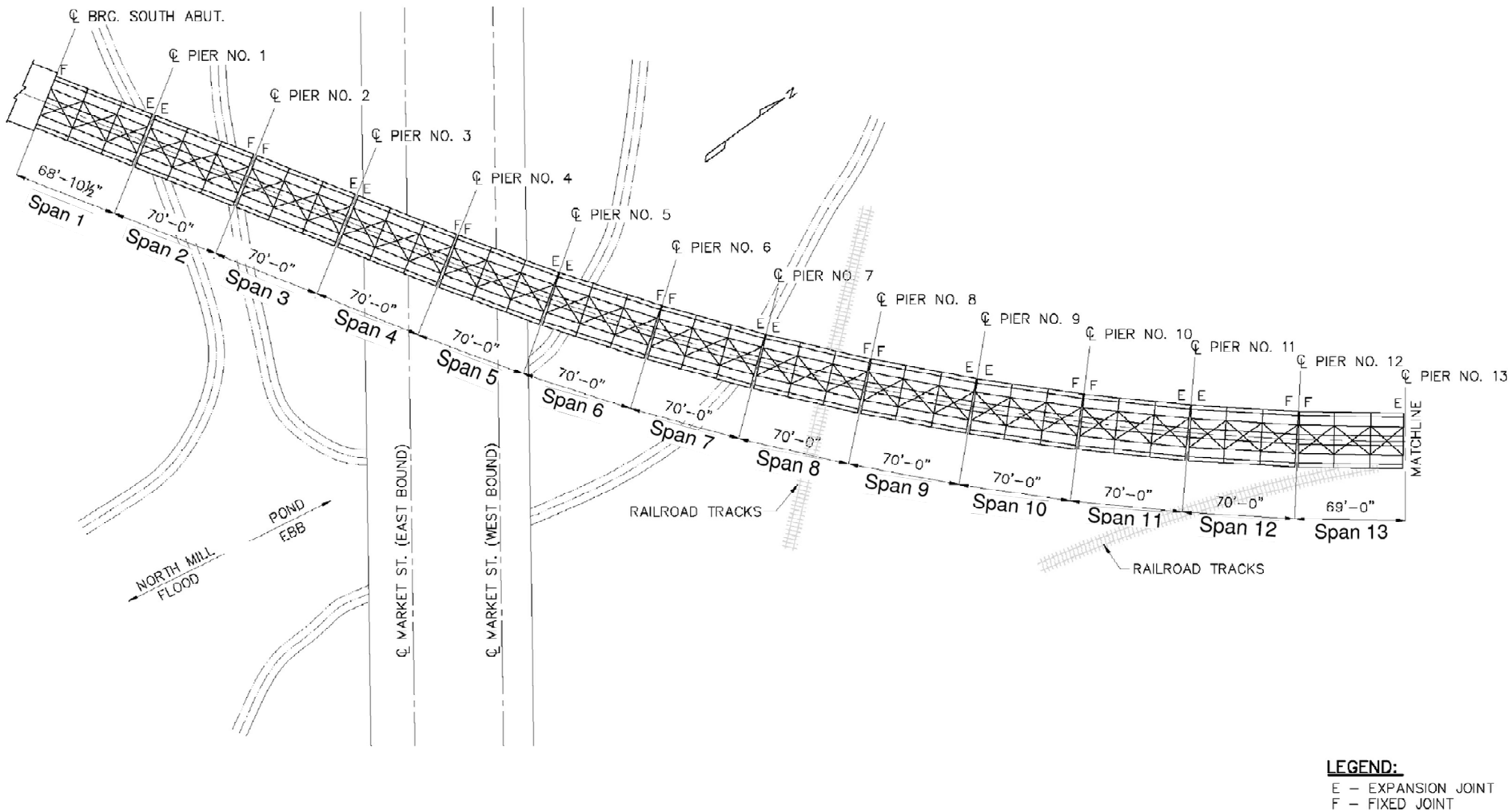

BRIDGE FRAMING PLAN – ROADWAY APPROACH SPANS 14, 15 AND 21-27

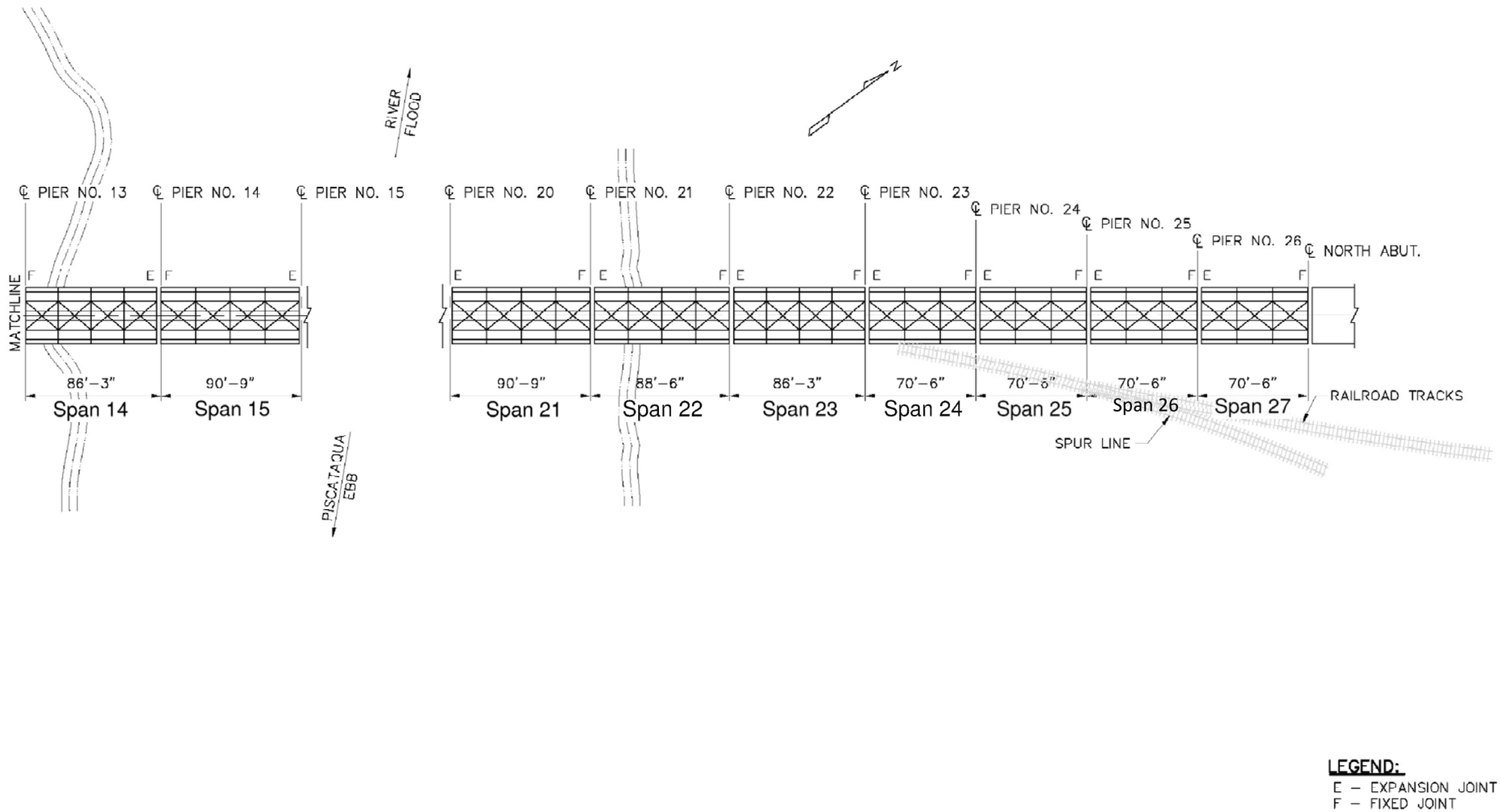

TYPICAL BRIDGE FRAMING PLAN – ROADWAY APPROACH SPANS

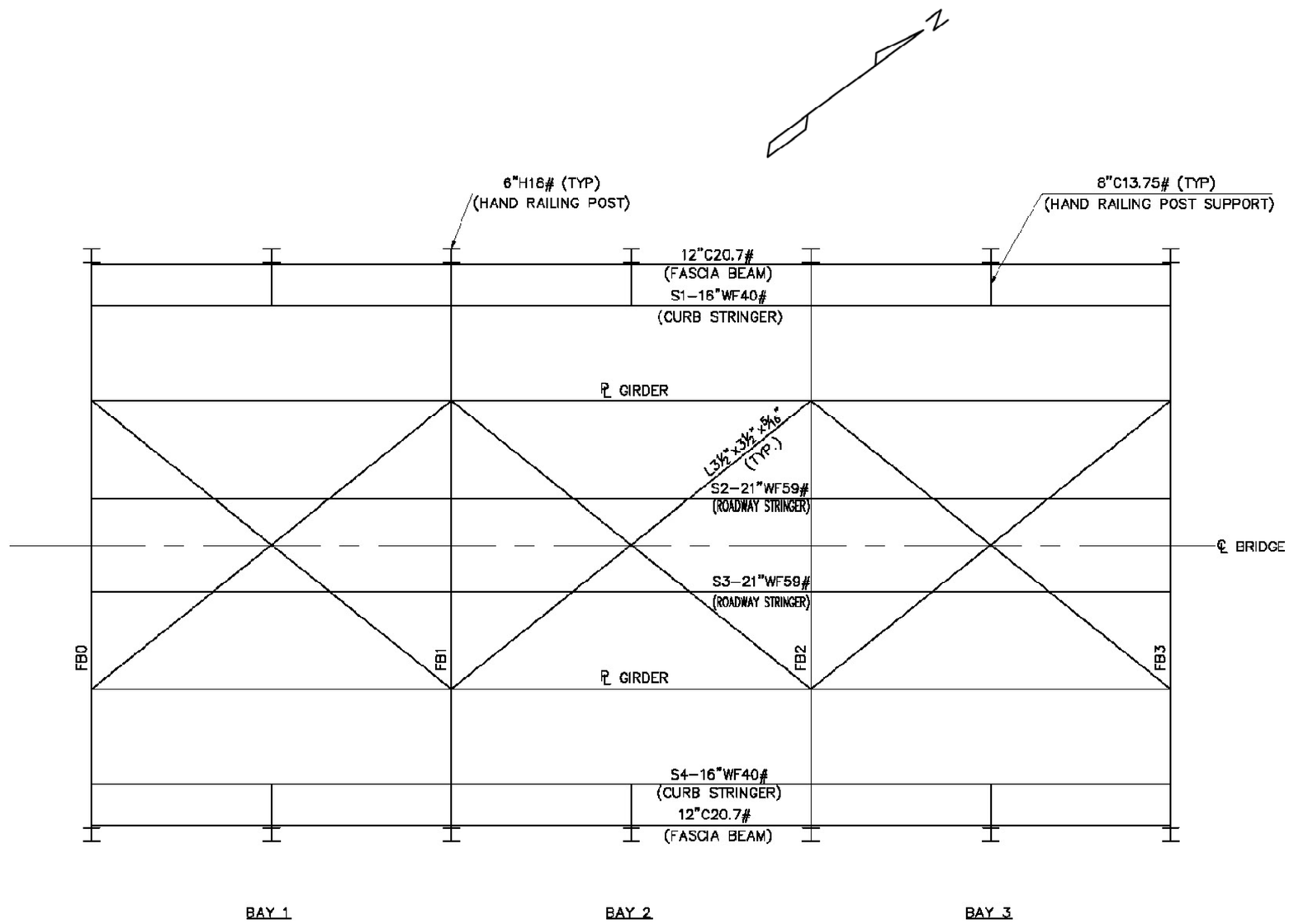

APPROACH SPAN FRAMING PLAN
(SPANS 1–13, 24–27)

TYPICAL BRIDGE FRAMING PLAN –ROADWAY APPROACH SPANS

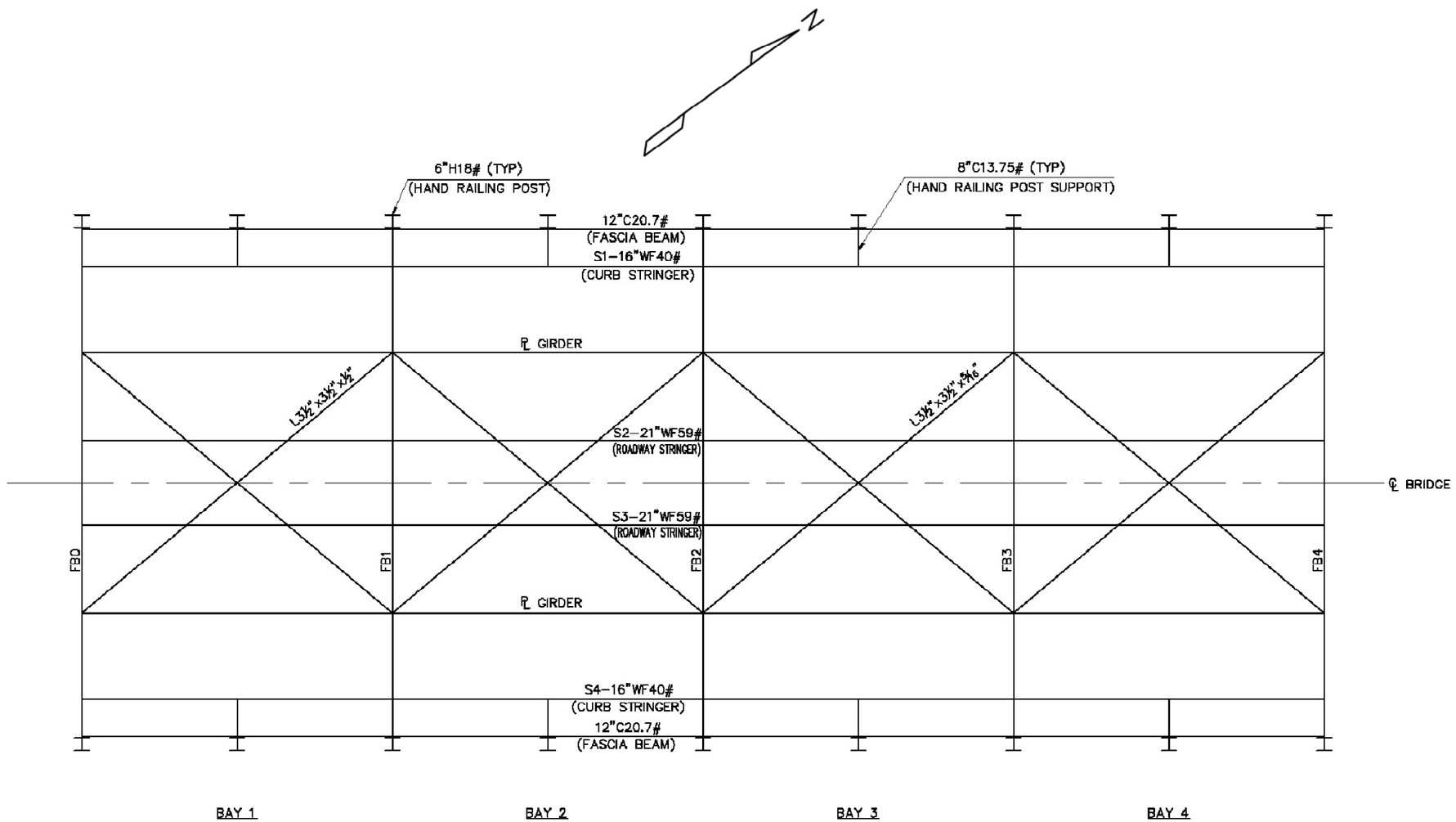

APPROACH SPAN FRAMING PLAN
(SPANS 14, 15, 21–23)

TYPICAL BRIDGE FRAMING PLAN – TRUSS SPANS

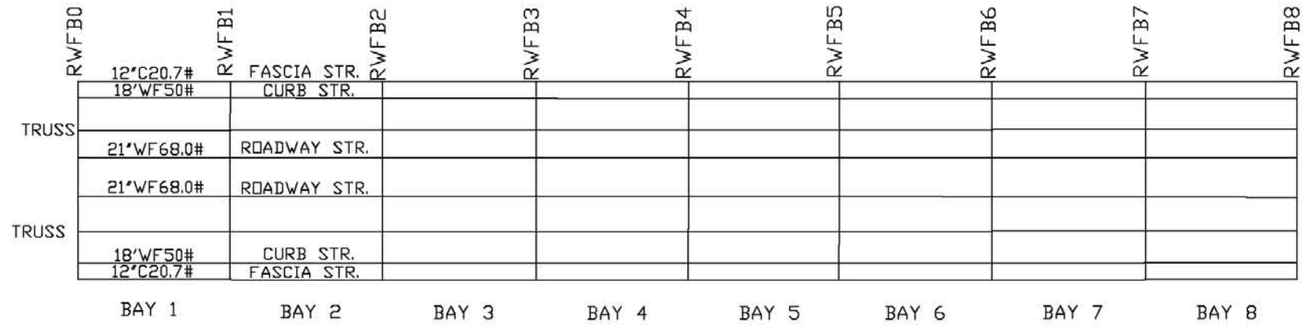

TOP DECK FLOOR SYSTEM

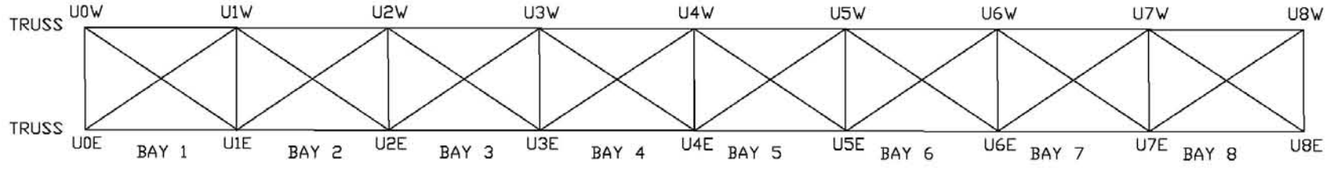

TOP LATERAL BRACING SYSTEM

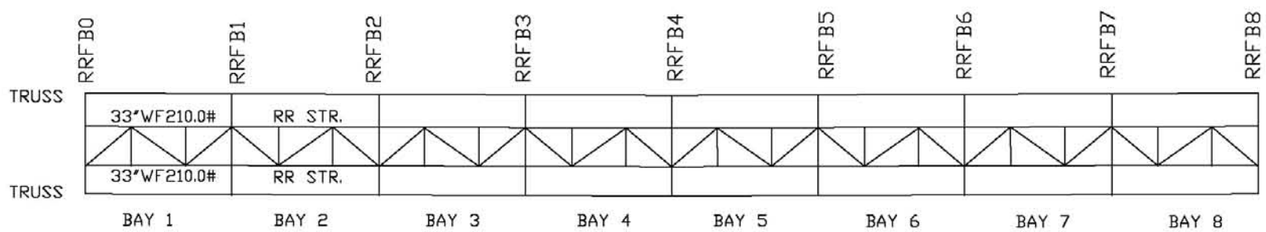

BOTTOM DECK FLOOR SYSTEM

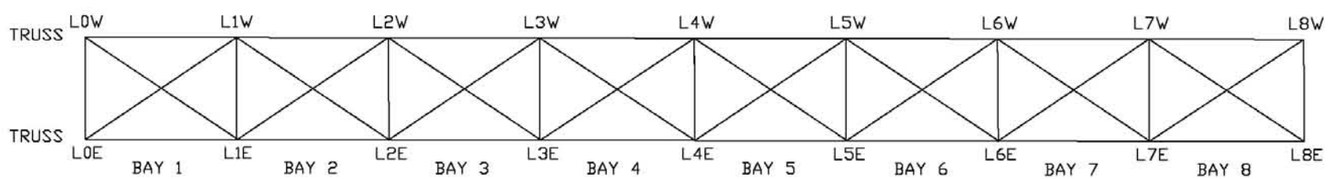

BOTTOM LATERAL BRACING SYSTEM

Legend:

RRFB – Railroad Floorbeam

RWFB – Roadway Floorbeam

STR. – Stringer

RR - Railroad

TYPICAL BRIDGE FRAMING PLAN – TOWER ELEVATION

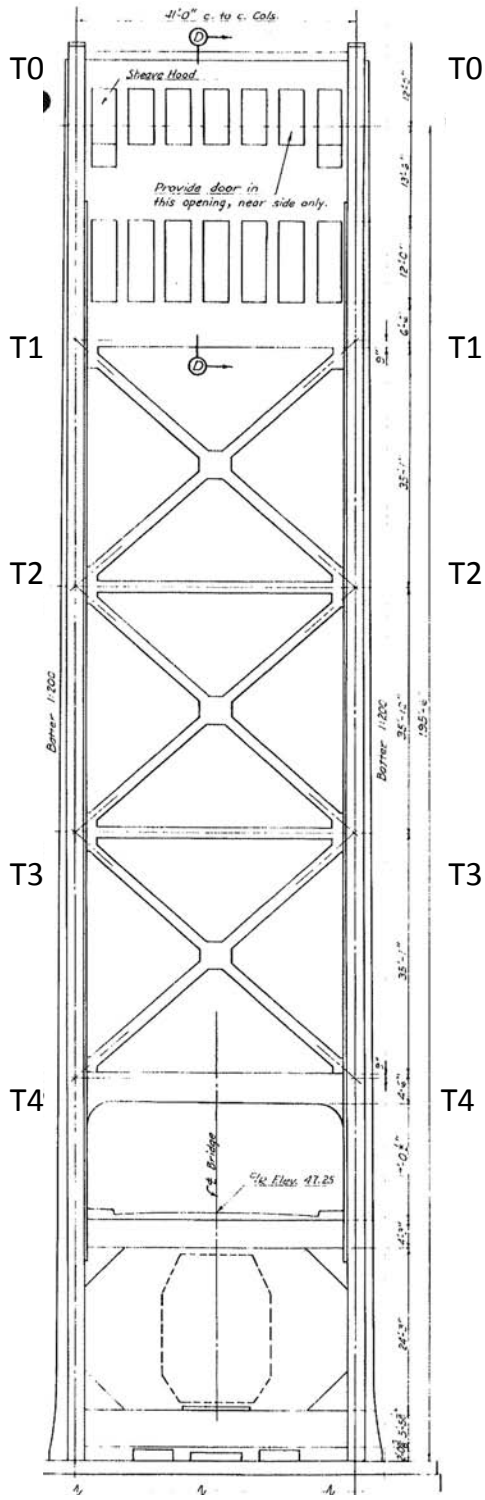

TYPICAL BRIDGE FRAMING PLAN – RAILROAD APPROACH SPANS

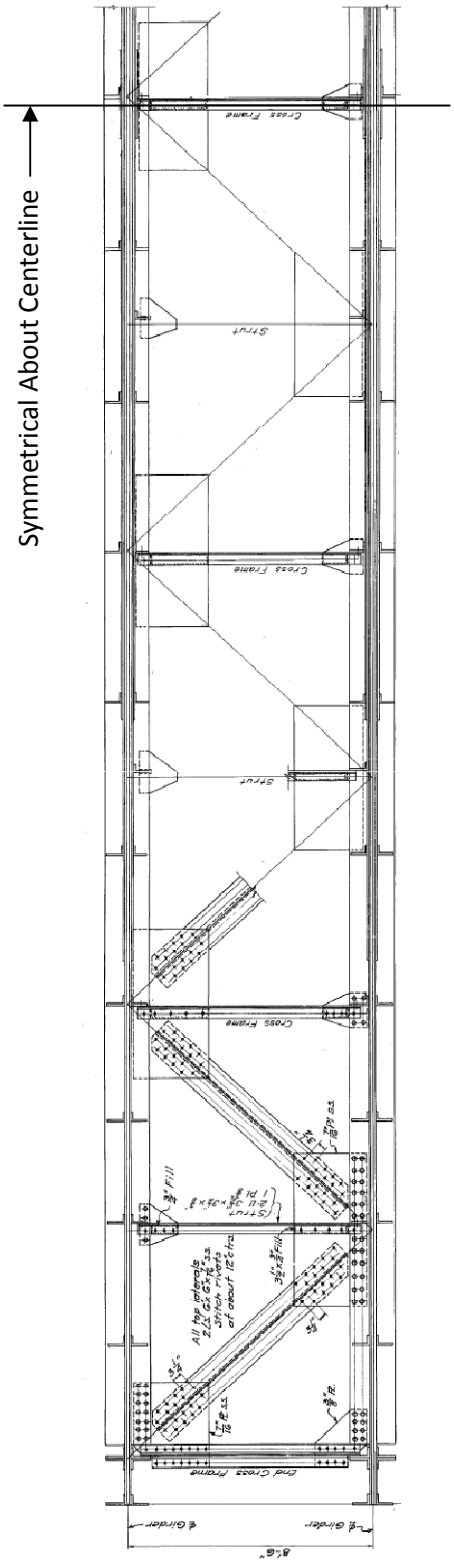

TYPICAL BRIDGE CROSS SECTION – ROADWAY APPROACH SPANS

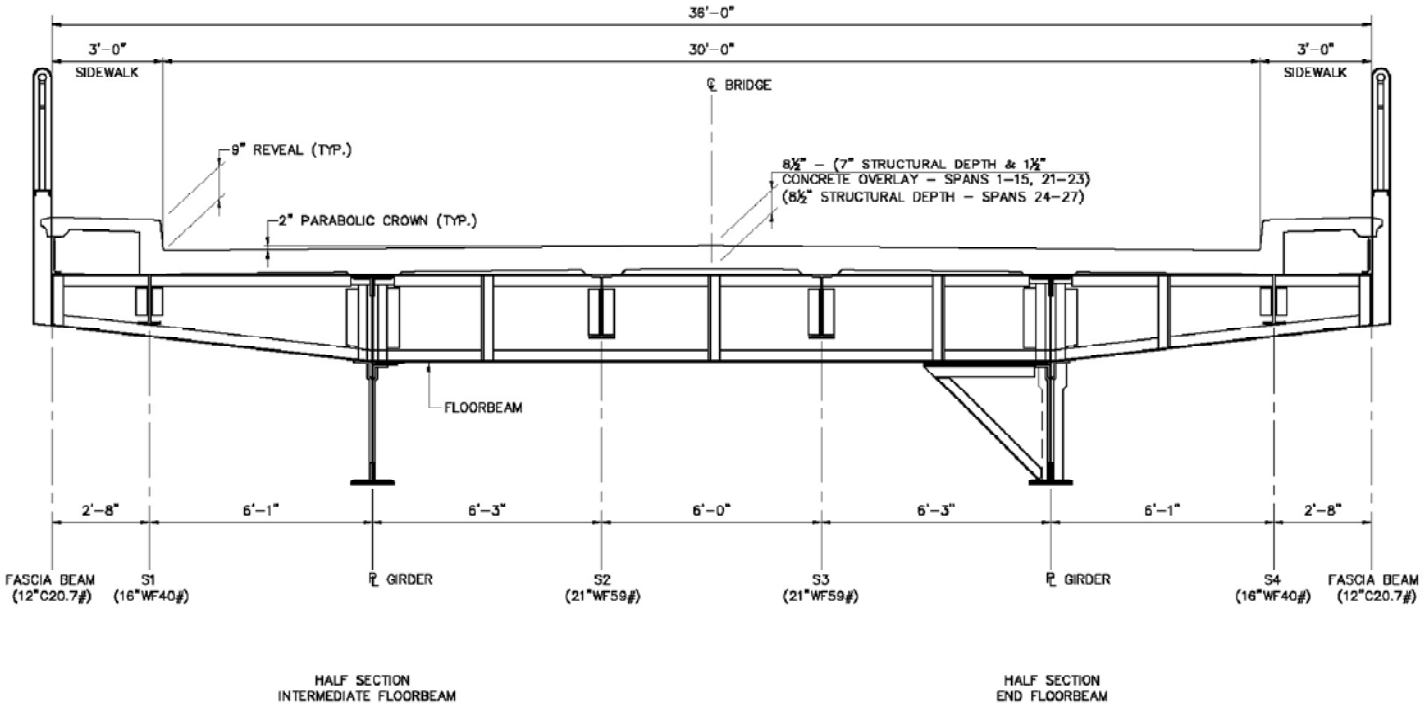

TYPICAL BRIDGE CROSS SECTION – TRUSS SPANS

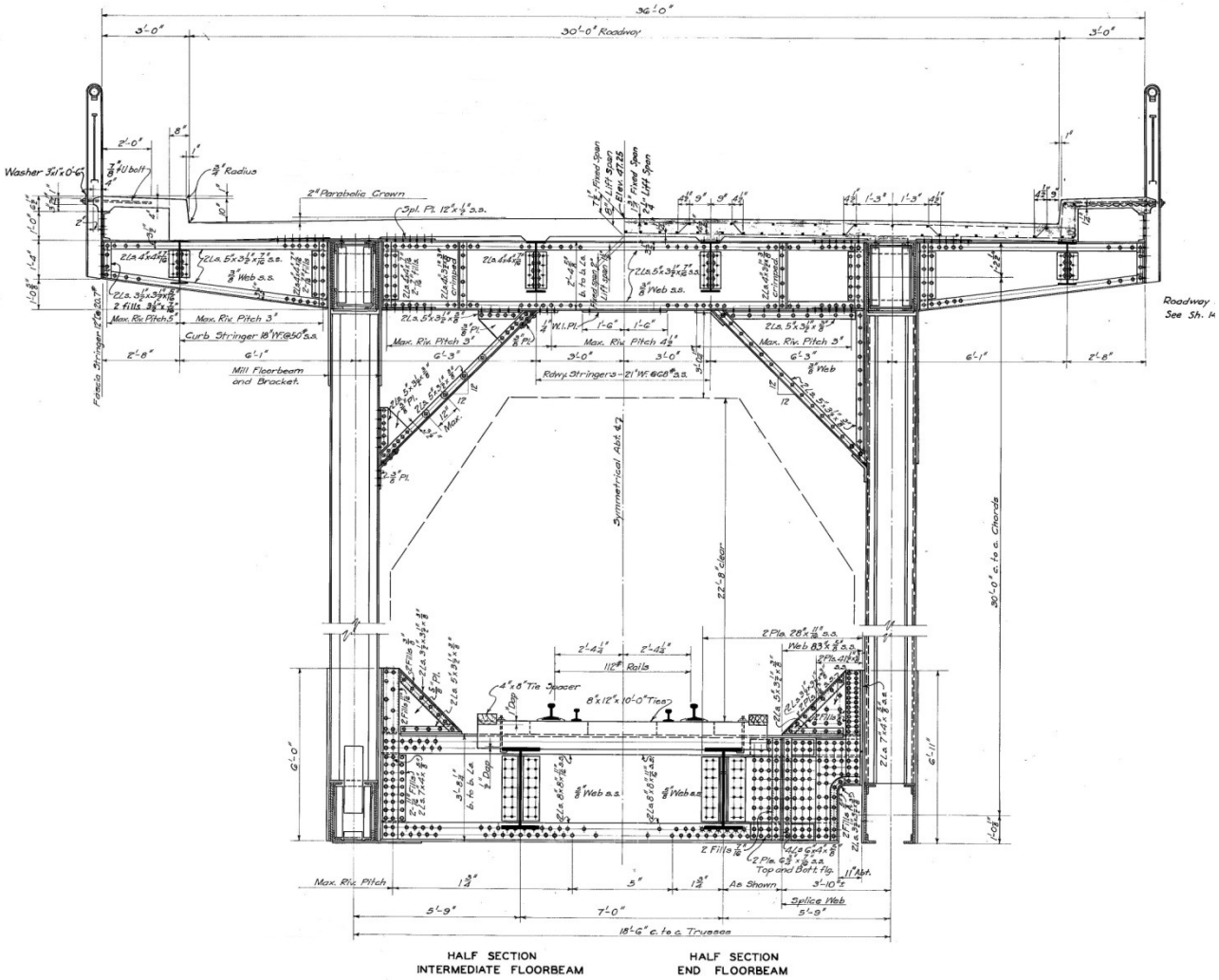

TYPICAL BRIDGE RAILROAD DECK CROSS SECTION

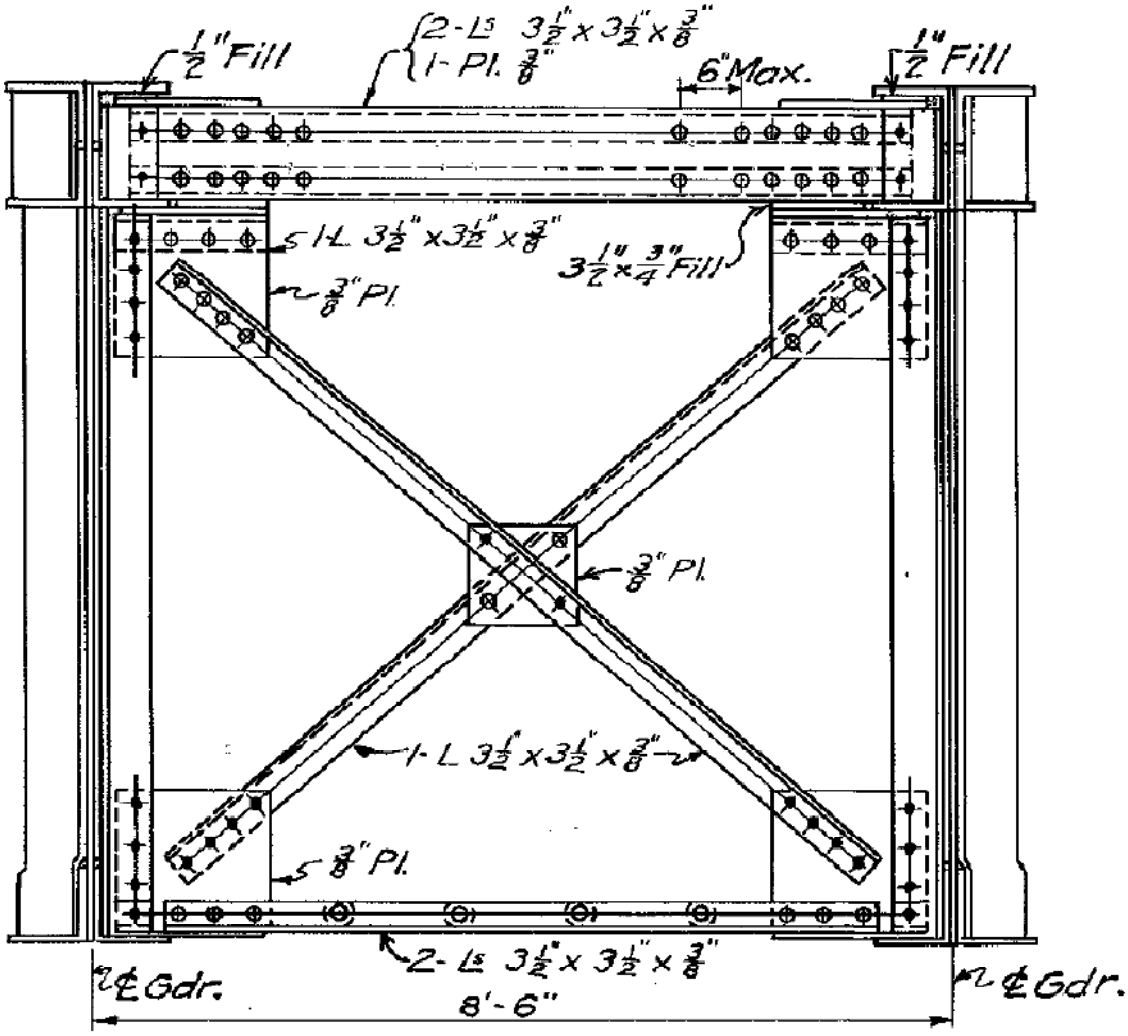

CROSS SECTION – RETRACTABLE RAILROAD APPROACH SPAN 21

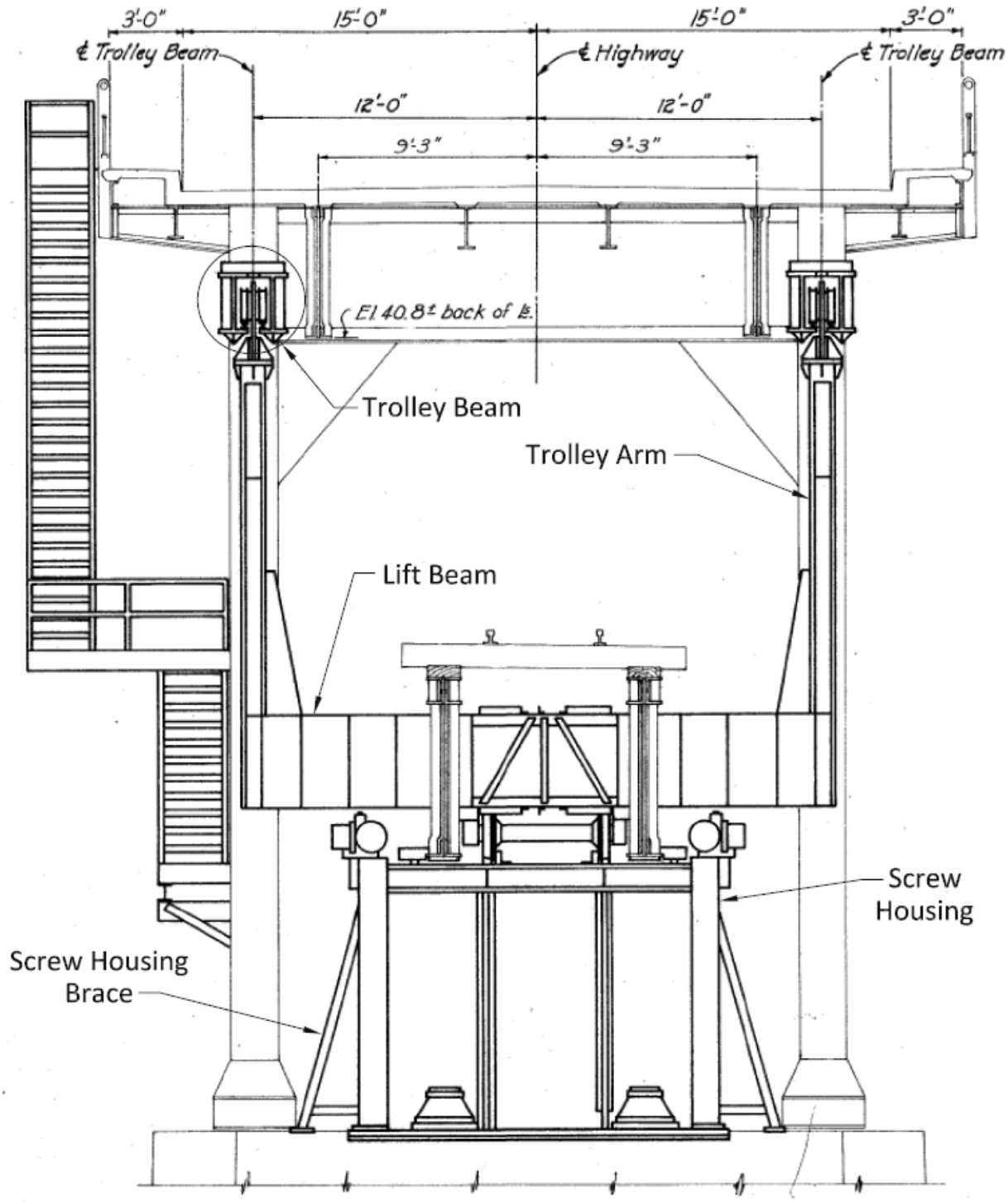

INSPECTION FINDINGS

INTRODUCTION

In May and June of 2009, HDR Engineering, Inc. (HDR) and Hoyle Tanner and Associates, Inc. (HTA) performed an in-depth inspection of the Sarah Mildred Long Bridge for the New Hampshire Department of Transportation. The inspection results are to be used to perform a load rating for the existing structure in its as-inspected condition and to develop rehabilitation cost estimates for the Sarah Mildred Long Bridge as part of the Bridge Inspection and Cost Analysis (BICA) Study.

BRIDGE DESCRIPTION

The Sarah Mildred Long Bridge carries the Route 1 Bypass over the Piscataqua River from Portsmouth, New Hampshire to Kittery, Maine. The structure is located in a tidal area where water elevation typically has an eight to twelve foot variation between high and low tide. The tower-drive vertical lift bridge was built in 1940. The five main spans carry both highway and rail traffic and consist of five riveted steel, straight-back, warren-type truss spans. The roadway approach spans consist of fifteen approach spans on the south end of the bridge and seven approach spans on the north end of the bridge. They are comprised of built-up riveted deck girders and floorbeams, as well as rolled I-shaped and C-shaped stringers. The railroad approach spans consist of three deck girder spans on the south approach, as well as two fixed deck girder spans and a retractable deck girder span on the north approach. The roadway and sidewalk decks are composed of reinforced concrete and carry at 30 foot wide roadway. The railroad spans carry timber tie open decks. The truss spans are supported by reinforced concrete piers with granite facades. The approach spans are supported by reinforced concrete piers and abutments, and steel pier bents.

The spans are numbered 1 to 27, from south to north. The truss spans are numbered from south to north as 16 to 20 and are referred to as Truss Spans 1 to 5 within this report. Truss panel points and floorbeams are numbered from south to north with the southernmost panel point or floorbeam of each span designated as 0. Stringers are numbered from west to east.

INSPECTION METHODS

Several inspection access methods were utilized to perform the in-depth inspection of the Sarah Mildred Long Bridge.

The fascia side of the trusses, the fascia side gusset plates, the overhang and floorbeam support brackets and the bottom deck (railroad) floor system were inspected utilizing a bucket boat. The bucket boat is a custom designed and constructed craft consisting of a 30’ by 15’ boat with pontoons and a 60’ bucket.

The interior face of the trusses and the underside of the roadway deck were inspected utilizing a UB-30 hi-rail vehicle operating from the railroad deck.

The towers were inspected by industrial rope access. Structure climbing and of the vertical lift span were used to access the top of the towers.

The Truss Span Piers were inspected utilizing a bucket boat, as well as underwater diving.

The roadway approach span structural steel and underside of deck were inspected using a UB-30 operating from the roadway deck. Land access was utilized to inspect the bridge deck wearing surface and soffit, abutment and bases of the piers. The railroad approach spans were inspected by bucket boat and land access.

BRIDGE CONDITION

Item 58 – Overall Deck – Poor Condition

58.1: Deck

The bridge decks Spans 1-23 were rehabilitated in a 1987 project that consisted of removing the existing 1" asphalt wearing surface, scarifying ½" of the deck top surface and constructing a 1½" concrete overlay upon completion of partial and full-depth repairs. The project also included a complete deck replacement, with the thickness increased from 7½" to 8½", for Spans 24 to 27.

Bridge deck soffit condition observations are noted in this section. Spans 1 to 23 concrete overlay and Spans 24 to 27 integral wearing surface conditions are noted in the Item 58.2 Wearing Surface section of the report.

Roadway Approach Spans 1 to 15 and 21 to 23:

Numerous full-depth concrete repairs were observed on the deck soffit throughout the approach spans. Many of these repaired areas and other locations exhibit concrete spalling, delamination, cracking and efflorescence. Exposed reinforcement with significant section loss was also observed. Spalled areas range in size from approximately one square foot to 38 square feet. Deck spalls are also prominent around the curb PVC downspouts adjacent to the stringer top flanges.

The concrete sidewalks, curbs and deck overhangs also exhibit significant spalling, delamination and efflorescence. Curb spalls occur on both sides of the expansion joints at numerous locations. Curb spalls were also observed at bridge rail post locations. Exposed reinforcement was observed at many of the locations.

Truss Spans 1 to 5, Roadway deck:

Truss Span 1 deck soffit between trusses exhibits random map cracking. Truss Spans 2 soffit exhibits one 6" x 1' spall with exposed reinforcement. Truss Span 3 (lift span) deck soffit between the trusses has numerous full depth repairs and other locations exhibit concrete spalling, delamination and cracking. Areas of honeycombing and spalling, with exposed reinforcement, were observed on the Truss Span 5 soffit.

The roadway deck overhangs are spalled around the majority of metal drain pipes and PVC downspouts. The deck is also spalled adjacent to locations where the pedestrian rail connects to the fascia stringer. Many bays have spalls ranging in area from one-half square foot to 24 square feet. The majority of bays have hairline cracks transverse to the roadway, many with efflorescence. Spalls typically occur between the interior stringer and top chord.

Railroad deck:

The open-deck railroad ties are in generally fair condition with moderate checking and splitting on the majority of the railroad ties.

Roadway Approach Spans 24 to 27:

The deck in approach Spans 24 to 27 is considered to be in good condition. Transverse cracking with some efflorescence was observed primarily in the overhangs. Concrete spalls were primarily observed at expansion joint locations; however, some spalls were observed at girder and stringer flange edges. Rust staining was also observed in the deck soffit and overhang cracks.

58.2 Wearing Surface:

Roadway Approach Spans 1 to 15 and 21 to 23, and Truss Spans 1 to 5:

Visual observations and soundings by the chain drag method were utilized to determine the condition and extent of deterioration for the 1½" concrete wearing surface. Based on the visual observations and nondestructive testing methods, the wearing surface is considered to be in poor condition. The following deficiencies were noted:

- The wearing surface has been repaired in numerous locations.
- Many of these repaired areas exhibit extensive cracking with some delamination.
- The wearing surface exhibits extensive cracking, some of which originates at repair locations.
- A large number of delaminated areas were identified and mapped during the inspection.
    - Approximate areas of delamination:
        - Approach Spans 1 to 15 = 1610 square feet (Span 5 is the worst with approximately 210 square feet).
        - Truss Spans 1 to 5 = 2420 square feet (Truss Span 3 (lift span) is the worst with approximately 840 square feet).
        - Approach Spans 21 to 23 =1320 square feet (Span 23 is the worst with approximately 620 square feet).
    - Total estimated delaminated area = 5350 square feet, which represents approximately 7% of the wearing surface area of these spans, which is approximately 75,500 square feet.

Roadway Approach Spans 24 to 27:

Visual observations and soundings by the chain drag method were utilized to determine the condition and extent of deterioration for the ½" integral concrete wearing surface. Based on the visual observations and nondestructive testing methods, the wearing surface, for these spans, is considered to be in good condition. The integral wearing surface exhibits random cracking. Spalling and delamination was observed adjacent to expansion joints. Little or no spalling or delamination was observed within the spans.

58.3 Deck Joints:

Roadway Approach Spans 1 to 15:

The South Abutment compression seal is damaged and holed at the curb. The seal is filled with sand and debris.

Approach Spans 1 to 15 have three different expansion joint types. The expansion joints at Piers 1, 3, 5, 7, 9 and 11 consist of a Transflex 200-A elastomeric modular type joint. Fixed Piers 2, 4, 6, 8, 10 and 12 consist of a nominal 2"x2" neoprene compression seal joint. The expansion joints at Piers 13 through 15 are prefabricated compression joints installed during the 1987 rehabilitation project. The following deficiencies were noted:

- Joints are filled with sand and debris.
- Compression seals at fixed Piers 2, 4, 6, 8, 10 and 12 are leaking.
    - These joints are located directly above the end floorbeam top flange.
    - Extensive leakage has led to significant deterioration of the floorbeam top flanges and overhang tension tie plates.
    - Extensive leakage at the sidewalk has led to significant deterioration of the curb stringers.
    - Refer to Items 59.2 and 59.3 for stringer and floorbeam condition.
- Compression seal at Pier 4 joint has been repaired with what appears to be an elastomeric type sealant.
- Compression seal at Pier 6 is no longer tight against the concrete.
- Significant deterioration of easterly curb at Pier 8 has rendered the compression seal ineffective in this location.
- Pier 12 compression seal has a missing section at the westerly sidewalk curb. Seal was replaced with polystyrene foam.
- Piers 1, 3, 5, 7, 9, 11, and 13 through 15 expansion joints are leaking.
- The elastomeric modular seal at Piers 1, 3 and 9 was repaired with what appears to be an elastomeric type sealant.
- Pier 15 joint seal has failed and is hanging below the deck.
- Expansion joint steel is heavily rusted.

Truss Spans 1 to 5:

The following deficiencies were noted:

- Finger joints are filled with sand and debris.
- Finger joints exhibit rusting with laminar corrosion.
- Moderate laminar corrosion on sidewalk sliding plates.
- Pier 16 joint sidewalk plates are holed.
- Pier 17 (South Tower) westerly sidewalk seating plate is bent at the corner.
- Pier 18 (North Tower) sidewalk seating plates are bent and torn.
- North Tower compression seal is torn and is not seated against the concrete sidewalk curb.
- Pier 19 easterly sidewalk sliding plate exhibits heavy rusting.
- Pier 19 finger joint has plow damage.
    - Broken fingers were repaired.
    - Some finger ends are damaged.

Roadway Approach Spans 21 to 27:

The existing finger plate expansion joints were replaced with prefabricated compression seal joints as part of the 1987 rehabilitation project. Joint steel is heavily rusted with laminar corrosion.

Expansion joint structural steel rusting and subsequent staining of the concrete deck soffit is indicative of extensive joint leakage.

The North Abutment compression seal is torn at the curbs. Sections of the seal are cracked. One section of the seal, adjacent to a concrete header repair, is missing. Water leaks onto the superstructure and substructure below.

58.4 Sidewalks:

Sidewalk decks are comprised of reinforced concrete, supported by the roadway deck, a C-shaped steel stringer and floorbeam overhangs. See sections 58.1, 59.2 and 59.3 for the conditions of the concrete deck, stringers and floorbeams, respectively.

58.5 Bridge Rail:

The existing pipe rail with balusters is inadequate for vehicular impact. The rail was strengthened by adding a 12" horizontal HSS tube section. The bridge rail is considered to be in serious condition due to the following deficiencies observed:

- Rail posts are holed at connection locations below supplemental posts added to correct this deficiency.
- Pipe rail is heavily rusted with separation from rail posts and holed areas throughout.
- Heavy rusting and laminar corrosion of pipe rail, balusters, rail posts and other rail components.

58.6 Drainage:

Roadway Approach Spans 1 to 15 and 21 to 27:

The scupper downspouts exhibit significant rusting and section loss. Downspout section loss at ends allows water and salt-laden debris to collect on curb stringer flanges resulting in moderate to severe laminar corrosion and section loss.

Truss Spans 1 to 5:

The fixed truss spans have both metal and PVC drain pipes underneath the deck. The PVC downspouts are small diameter drain pipes, approximately 1" diameter, and are spaced at approximately 5' on center. The metal downspouts are large drain pipes located at the midpoint of each bay.

Metal pipes are typically heavily deteriorated with corrosion holes. The corrosion holes have allowed water to pour onto the interior overhang stringer, causing laminar corrosion on the stringer. Truss bottom chords, diagonals and verticals located under the metal drains pipes have deterioration that is more advanced than the typical truss condition.

Item 59 – Overall Superstructure – Serious Condition

59.1 Girders

Roadway Approach Spans 1 to 15 and 21 to 27:

The girders are considered to be in satisfactory condition. The following deficiencies were noted during the inspection:

- Many end and intermediate bearing stiffeners exhibit significant pack rust between the protruding angle legs.
- There is pack rust with section loss between girder inner and outer cover plates.
- Some girders also exhibit pack rust with section loss between the girder bottom flange angle and cover plate.
- Spans 1 to 12 girder end protruding angle legs exhibit significant section loss. Many have holed legs.
- Moderate to heavy rusting with paint system failure at girder ends.
- Some areas of light rusting with paint system failure along the girder length.
- Minor web plate corrosion with section loss at bearing locations.
- Moderate to heavy top flange angle rusting with section loss at bearing locations.
- Rivet head section loss at bearing locations for some of the girders.
    - Span 3 West Girder is the most severe with 10 rivets having 40% estimated loss.
- Rivet head section loss at isolated locations along the span.
    - Span 21 West Girder has 10 rivets with estimated 80% loss and 6 rivets with nearly 100% loss.
- Isolated pitting on top surface of bottom flange exterior angles.
- Some girder webs at or near the bearings were repaired with welded plates.
- Span 13 East and West Girder hinge seat flanges are holed and are very thin.
    - Top flange exhibits heavy rusting and laminar corrosion at hinge locations due to expansion joint leakage.
- Spans 24 to 27girder hinge seat flange angles exhibit laminar corrosion of girder hinge seat flanges with section loss.
- Spans 24 to 27 hinge seat flange angle to web rivets exhibit head loss.
- Spans 24 to 27 girder hinge seat flanges were repaired with welded plates.
- Span 25 west girder hinge support bottom flange has approximately ½" of deformation.
- Span 27 East Girder bottom flange angles and cover plates are bent due to vehicular impact.

Refer to Appendix C for detailed girder condition sketches.

Railroad Approach Spans 14, 15, 21, 22, 23:

Span 14 girders have laminar corrosion on the top flange. The East Girder has laminar corrosion on the bottom flange at the lateral gusset plates. The West Girder has laminar corrosion on the bottom flange for the southernmost 8'.

Span 15 girders have pitting on the top face of the interior side of the bottom flange at the southern end of the span. The East Girder has pitting for a length of ten feet and the West Girder for a length of fifteen feet. Both girders have pitting on the bottom flange for a length of twelve feet from the

north end. The fascia sides of the bottom flanges have surface rust over the full length. The West Girder has pack rust with minimal prying between flange plates at midspan. The top flanges have laminar corrosion over the majority of the span length. The interior faces of the webs have surface rust at span ends.

Span 21 is a retractable span that is left open during summer months to allow the passage of small boats. The span was inspected while retracted, resting above Truss Span 5. The girders have laminar corrosion on the bottom flange and bearing stiffener at the north end. The East Girder has distortion in the web at the northernmost 6" of the web. The bottom flanges of both girders have up to 1/8" pitting over the northern four bays and at the southern end, with minor surface corrosion elsewhere. The top flanges have moderate to heavy laminar corrosion over the northern four bays and surface rust elsewhere. The end stiffener plate at the southern end of the West Girder has two corrosion holes.

Span 22 girders exhibit laminar corrosion on the bottom flanges for six to eight feet from span ends and surface rust on the top face of the top flanges, full-length. The outside faces of the girders have paint loss with some surface rust on the top face of the bottom flange.

Span 23 girders have surface rust on the top face of the top flanges. The East Girder bottom flange has laminar corrosion for a length of 5' from the south bearing.

59.2 Stringers:

Roadway Approach Spans 1 to 15 and 21 to 27 Sidewalk Fascia Beams:

Sidewalk fascia beams are considered to be in serious condition. The following deficiencies were noted:

- Paint system failure with heavy rusting.
- Laminar corrosion of channel top flange.
- Web holes adjacent to rail posts.

Roadway Approach Spans 1 to 15 and 21 to 27 Curb Stringers:

The curb stringers are considered to be in poor to serious condition. The following deficiencies were noted and are summarized below:

- Moderate to heavy rusting with paint system failure at stringer ends.
- Moderate to heavy top flange rusting with laminar corrosion and section loss.
- Moderate to heavy bottom flange rusting with laminar corrosion and section loss at scupper locations.
    - Span 9, Bay 1, Stringer S4 has approximately one quarter of the flange width lost.
- Moderate to heavy web rusting with laminar corrosion and section loss.
- The following stringers have holed webs:
    - Span 4, Bay 3, Stringer S1.
    - Span 6, Bay 3, Stringers S1 and S4.
    - Span 10, Bay 3, Stringer S1. NHDOT bridge maintenance has repaired this stringer since the time of inspection.
    - Span 12, Bay 3, Stringers S1 and S4.

- Span 5, Bay 1, Stringer S4 top flange is not in contact with the deck.

Refer to Appendix C for detailed curb stringer condition sketches.

Roadway Approach Spans 1 to 15 and 21 to 27 Roadway Stringers:

The roadway stringers are considered to be in fair condition. Moderate to heavy rusting with some laminar corrosion was observed at stringer ends. Additionally, Span 6 Roadway Stringer S1 has section loss at web cope/flange interface.

Truss Spans 1 to 5:

The roadway deck overhang is supported by an I-shaped steel curb stringer located below the roadway curb and a C-shaped channel on the fascia end of the overhang. The curb typically has laminar corrosion on the bottom flange at metal drain pipe locations. The C-shaped fascia beam typically has laminar corrosion at locations where the pedestrian pipe railing is bolted to the channel. In Span 1, Bay 4 East and Span 4, Bay 1 East, there is laminar corrosion on all surfaces at the south end of the curb stringers. In Span 2, Bay 8 East, there is laminar corrosion on the west face of both flanges and the web of the curb stringer at the metal drain pipe. Under the Operator House on Span 2, Bays 7 and 8, the curb stringer has paint loss and surface rust throughout, as well as laminar corrosion on the top flange.

The truss span roadway stringers are considered to be in good condition. No serious deficiencies were observed.

Truss span railroad stringers are typically in fair condition. There is laminar corrosion on the bottom flanges at interfaces with truss lateral bracing connections. The top flanges typically have surface rust full-length and the webs typically have laminar corrosion on less than 5% of their surface area.

Railroad stringers at Piers 17 and 18 span over the piers at the towers. There are two stringers that carry the railroad track and an additional four stringers that support working platforms at the towers. These stringers span between two cross girders that are supported by the towers. The stringers are typically rusted with laminar corrosion and pack rust. These stringers are considered to be in serious condition.

The following deterioration was noted on the stringers at Pier 17 (South Tower):

- The East Railroad Stringer has 3/8" section loss in the bottom flange at span ends.
- Both railroad stringers have up to 1" pack rust between the top flange and the cover plate, with up to 1/8" section loss in the top flange. The cover plates are heavily deteriorated.
- The two eastern platform stringers have up to 1" pack rust between the bottom flange and the end connection.
- The bottom flange of the easternmost platform stringer has up to 3/16" section loss in the bottom flange.

The following deterioration was noted on the stringers at Pier 18 (North Tower):

- The West Railroad Stringer has 1/8" section loss in the bottom flange.
- The top flange of the West Railroad Stringer has 100% section loss in a 4" wide portion of the top flange over a length of six feet.
- The westernmost platform stringer has a 12"x1" hole in the web at approximately midspan.

59.3 Floorbeams:

Roadway Approach Spans 1 to 15:

Intermediate floorbeam cantilever top and bottom flange angles exhibit moderate to heavy rusting with laminar corrosion and section loss. No serious deficiencies were observed on intermediate floorbeam sections between the girders. Refer to Appendix C for detailed intermediate floorbeam condition sketches.

Spans 1 to 15 end floorbeams are considered to be in serious condition. The following deficiencies were observed:

- Expansion joints and fixed joint compression seals leak resulting in significant rusting, laminar corrosion and section loss of top and bottom flange angles.
- In many areas, the top flange angles are holed exposing the deck above.
- Top flange angle leg section loss of up to 100% was observed on numerous floorbeams.
- Top flange tension tie plates, which provide floorbeam cantilever continuity, are severely corroded with section loss.
- Tie plate section loss up to 50% is estimated in some locations. Section loss could only be estimated since plate is partially embedded within the bridge deck.
- Rivet head loss at tension tie plates.
- Rivet head section loss at isolated locations along the floorbeams.
- The floorbeams identified below have severe deficiencies:
    - Span 2 end floorbeam FB3 has up to 100% top flange angle section loss for full width of leg. Remaining angle leg has over 50% section loss.
    - Span 3 end floorbeam FB0 cantilever has up to 90% top flange loss and tension tie plate heavy rusting with laminar corrosion.
    - Span 4 end floorbeam FB3 cantilever has up to 100% top flange loss and approximately 50% loss of tension tie plate.
    - Span 6 end floorbeam FB3 between the girders has up to 100% section loss in the top and bottom flange angles in several locations.
    - The cantilevered portion of span 6 floorbeam FB3 has up to 100% section loss in the top flange angle near the tension tie plate with significant rivet head loss on both sides of the web.
    - Span 8 end floorbeam FB3 has up to 100% top flange angle section loss for full width of leg. Remaining angle leg has over 50% section loss.
    - The cantilevered portion of span 8 end floorbeam FB3 has up to 100% section loss in the top flange angle near the tension tie plate with significant rivet head loss on both sides of the web.
    - Span 15 end floorbeam FB4 has 100% bottom flange angle section loss for full width of leg.

Refer to Appendix C for detailed end floorbeam condition sketches.

Truss Spans 1 to 5:

On the roadway deck, the floorbeam overhangs supporting the concrete deck are in generally fair condition. Floorbeam overhangs have laminar corrosion on the top flange at the ends, beneath the C-shaped fascia stringer, as well as surface rust on the top and bottom flanges at the interface with the truss gusset plate.'

The roadway floorbeams between trusses are in generally fair condition. Top flange angles generally exhibit light to moderate rusting. Some floorbeams exhibit areas of heavy rusting with laminar corrosion. Many of the tension tie plates have tack welds on both sides of the web that are approximately 1½" to 2" in length. One bottom flange angle section loss was observed on truss span 1 floorbeam 0 and is estimated to be approximately 50% to 70%. Due to the number and location of electrical conduits, a section loss could not be measured. Truss spans 1 and 2 floorbeams FB8 and FB0 respectively, also exhibit some section losses.

On the railroad deck, intermediate floorbeams typically have surface rust throughout the top face of the top flange, on knee braces and on less than 5% of the web surface area. There is typically pack rust between the bottom flange and the truss lateral bracing gusset plates, and laminar corrosion on the top face of both flanges between the stringers. There is also laminar corrosion on the top flange at the interfaces with knee braces. Floorbeams have two 1" diameter holes drilled in each side of the flange near midspan. The holes are not filled and are presumably holes for tie anchors that are no longer used.

End railroad floorbeams are in similar condition to intermediate floorbeams, with the exception that top flanges typically have laminar corrosion on the full length of the top face and no pack rust at lateral gusset plate interfaces. Additionally, the steel brackets attached to the web that support the deck between spans have laminar corrosion throughout.

Railroad floorbeams are in fair condition. See Appendix C for a diagram of typical railroad floorbeam deterioration.

Railroad cross girders at Piers 17 and 18 support the stringers that span over the piers at the towers. These cross girders are typically rusted throughout with corrosion holes in the top flange cover plate. The south cross girder on the south tower has up to 1" pack rust between the web and bottom flange, laminar corrosion on the web and corrosion holes on the top flange.

Roadway Approach Spans 21 to 27:

Spans 21 to 27 floorbeams are considered to be in poor to serious condition. The following deficiencies were noted:

- Cantilever top and bottom flanges exhibit moderate to heavy rusting with laminar corrosion and section loss.
- Rivet head loss at tension tie plates.
- Top angles between girders exhibit moderate rusting.
- The bottom flange angles between the girders exhibit section loss.
- Rivet head section loss at isolated locations along the floorbeams.
- Top flange tension tie plate's exhibit moderate to heavy rusting with laminar corrosion and section loss.

Refer to Appendix C for detailed floorbeam condition sketches.

59.4 Truss Members:

Truss Spans 1 to 5:

Truss bottom chords typically have surface rust on the top face of the top and bottom flanges and laminar corrosion on the top flange at batten plate interfaces. The interior web typically has laminar corrosion at interfaces with gusset plates. The exterior web plate typically has isolated paint loss and surface rust. Batten plates on the bottom chords are typically rusted. Bottom and top flanges typically have laminar corrosion with section loss between gusset plates at truss joints. Several chord members have sustained more advanced deterioration, including laminar corrosion on the exterior web, top flanges and bottom flanges. Several batten plates have advanced deterioration with corrosion holes and pack rust with prying.

Truss top chords are typically in fair condition, with surface rust on the top face of the bottom flanges. Several top chord members have pack rust with prying between the batten plate and bottom flange, as well as between the bottom flange and web plates.

Truss diagonals are typically in fair condition, with surface rust on less than 10% of the webs, top face of both flanges and lacing bars. Several members have more advanced deterioration, which consists of laminar corrosion on the top flanges, batten plates and lacing bars, as well as the exterior web. Several batten plates have corrosion holes.

Truss verticals are typically in fair condition, with some surface rust on the exterior flange and lacing bars. Several verticals have more advanced deterioration, consisting of laminar corrosion on the lacing bars, batten plates and exterior webs. Many of the verticals with advanced deterioration have pack rust between the flanges and bottom chord gusset plates. Vertical L4-U4 on Truss Span 5 West Truss has a 3”x1” corrosion hole on the exterior web near the lower gusset plate.

Truss members underneath metal drain pipes typically are the members with advanced deterioration.

See Appendix C for a detailed schedule of truss member conditions.

59.5 Towers and Retractable Span 21:

The tower facades have pack rust between several panels and at the tower windows. The pack rust is causing prying between overlapping panel points as well as prying of the façade from the tower. There are fifteen cracks throughout the façade, ranging in length from 1” to 53”. Three of the cracks near the northwest corner of the South Tower exhibit efflorescence from the mortar bed behind the panels. There are isolated areas with rust and laminar corrosion throughout the tower façades, with heavier corrosion within the splash zone near the bridge roadway deck. A 20’ length of panel on the southwest corner of the North Tower, a 15’ length of panel on the northeast corner of the North Tower and a 12’ length of panel on the northwest corner of the South Tower are prying away from the tower. Prying is up to 0.75” on the North Tower and up to 2.5” on the South Tower. A layer of mortar is visible behind the pried plate on the South Tower. There is a 3”x1” hole located on the South Tower, south face, east side approximately 3’ below the windows. There are also

corrosion holes varying between 1" and 2" diameter in size located on the North Tower, north face, west side.

Tower bracing typically has some isolated surface rust on the top faces of members. Panel points typically have laminar corrosion and pack rust at interfaces between members and gusset plates. On the North Tower, north face, the west gusset plate at panel point T3 is bent with laminar corrosion. Also on the North Tower, north face, the diagonal between panel points T1 and T2 is bent, apparently due to impact damage. On the South Tower, north face, the east gusset plate at panel point T4 has heavy laminar corrosion and it is bent out of plane approximately 2". Also on the South Tower, the vertical legs underneath the windows typically have pack rust with prying on the outside face.

Retractable Span 21 Trolley Beams are in generally satisfactory condition, with some surface rust on the horizontal faces of the beam. The elastomeric bearings for the Trolley Beams at Pier 21 are crushed and bulging. The Trolley Arms have surface rust adjacent to the Lift Beams and knee braces, as well as laminar corrosion at the bolted splice adjacent to the Trolley Beams. The Trolley Arms have ladder rails welded to them. The Lift Beams have laminar corrosion on the top flanges over the full length and on the bottom flanges at beam ends. Laminar corrosion on the top flange is more severe at the interface with knee braces. Screw Housing and Screw Housing Braces at Pier 20 have laminar corrosion throughout, with more severe corrosion near the base. Screw Housing and Screw Housing Braces at Pier 21 have laminar corrosion throughout, with more severe corrosion and several large corrosion holes near the base. The Screw Housing Braces at Pier 21 have up to 50% loss in cross-sectional area.

59.6 Bearings:

Roadway Approach Spans 1 to 15:

Approach Spans 1 to 12 bearings exhibit significant rusting and laminar corrosion. Span 5 northwest bearing anchor bolt nuts have up to 30% section loss. Span 13 girder hinge seat bearings are in satisfactory condition. Spans 14 and 15 bearings are also considered to be in satisfactory condition.

Railroad Approach Spans 14, 15, 21, 22 and 23:

Fixed railroad approach span bearings typically have laminar corrosion on the outside face of the bearing assemblies. In Spans 22 and 23, there is up to 70% section loss in the bolt nuts connecting the deck girders to the bearing assemblies. The south bearing anchor bolt nuts in Span 23 have up to 100% section loss. In Span 22, the north bearings have up to 80% section loss on the anchor bolt nuts. The Span 22 north bearings also have laminar corrosion on the bearing base plates. In Spans 14 and 15, there is up to 80% section loss in the anchor bolt nuts.

Retractable Railroad Approach Span 21 bearing plates typically have laminar corrosion and up to 50% section loss on bolts connecting the plate to the deck girders. Bearing base plates typically have surface rust on all surfaces.

Truss Spans 1 to 5: Truss bearings at Piers 15, 16, 19 and 20 typically have laminar corrosion on the base plate, as well as on the vertical bearing plate at the interface with the pin.

- Span 1 South Bearings (fixed – Pier 15) have surface rust between the pin caps and the bearing assemblies.
- Span 1 North Bearings (expansion – Pier 16) have laminar corrosion on the bearing pins. The anchor bolt nuts are heavily deteriorated, with up to 80% section loss.
- Span 2 South Bearings (expansion – Pier 16) have laminar corrosion on the inside of the gusset plates bearing on the pin. The anchor bolt nuts are heavily deteriorated, with up to 80% section loss.
- Span 2 North Bearings (fixed – Pier 17) have section loss to several anchor bolts. The east bearing has 70% section loss to two anchor bolt nuts. The west bearing has 90% section loss to an anchor bolt nut, and 30% section loss to another. The east bearing has laminar corrosion on all surfaces inside the bearing assembly.
- Span 3 South Bearings (fixed – Pier 17) have laminar corrosion on the base plates. All anchor bolts on the bearings are bent forward, toward Span 3.
- Span 3 North Bearings (expansion – Pier 18) have some surface rust between the base plate and top bearing plate.
- Span 4 South Bearings (fixed – Pier 18) have up to 80% section loss on two anchor bolt nuts on the west bearing. Two anchor bolt nuts on the east bearing have 70% and 30% section loss. The west bearing has surface rust on the pin cap. The east bearing has laminar corrosion on the bearing gusset plate inside the bearing assembly.
- Span 4 North Bearings (expansion – Pier 19) have 80% section loss on two anchor bolt nuts on the west bearing and 40% section loss on two of the east bearing anchor bolt nuts. There is laminar corrosion on the bearing gusset plates inside of the bearing assemblies.
- Span 5 South Bearings (expansion – Pier 19) have laminar corrosion on the bearing gusset plates inside of the bearing assemblies. The east bearing has laminar corrosion on the outside face of the bearing assembly. Two anchor bolts on the east bearing have 40% section loss.
- Span 5 North Bearings (fixed – Pier 20) have section loss to several anchor bolt nuts. On the east bearing, one anchor bolt nut has 60% section loss and another has 30% loss. On the west bearing, all anchor bolt nuts have up to 30% section loss. There is surface rust on the exterior surface of the bearing assembly.

Roadway Approach Spans 21 to 27:

Piers 21 and 22 Bearings:

The stainless steel expansion bearings are in satisfactory condition. The Span 22 West Bearing PTFE pad has partially slid out from between the bearing plates.

Girder Hinge Seat Bearings:

The girder hinge seat stainless steel expansion bearings are considered to be in satisfactory condition; however, the Span 23 West Girder hinge PTFE pad has slid out from between the bearing plates.

North Abutment Bearings:

The North Abutment bearings exhibit significant rusting and laminar corrosion. Anchor bolts and nuts are heavily rusted with section loss.

Retractable Span 21 Trolley Beam Bearings:

The elastomeric bearings are bulging.

59.7 Connections and Plates:

Roadway Approach Spans 1 to 15 and 21 to 27:

The lateral bracing to floorbeam connection plates are in fair condition. The following deficiencies were noted:

- Paint system failure with moderate rusting on some connection plates.
- Holed plate with significant pack rust at Span 6, Bay 3, FB3, for FB2 to FB3 bracing member.
- Heavy rusting with laminar corrosion on FB2 to FB3 Span 8, Bay 3, FB3 connection plate.
- Span 27, Bay 3, FB3 northeasterly connection plate is bent.

Railroad Approach Spans 14, 15, 21, 22 and 23:

The railroad approach spans have gusset plates connecting lateral bracing and cross frames to the top and bottom flanges. On the fixed railroad spans, top and bottom gusset plates typically have laminar corrosion on the top face. End bottom lateral gussets are heavily corroded, with a corrosion hole in the northernmost gusset on the East Girder of Span 22. In Span 22, several bottom lateral gusset plates near midspan have pack rust with prying between the bottom flange and gusset plate. In Span 23, the end cross frame gusset plates are severely deteriorated, with almost 100% section loss on the East Girder top gusset plate.

Span 21 lateral gusset plates located in the northernmost four bays have laminar corrosion on the top face. The northernmost bottom lateral gusset plate on the East Girder has heavy deterioration with a 3" diameter corrosion hole. Lateral gusset plates elsewhere have paint loss and surface rust on the top face.

Truss Spans 1 to 5:

Truss gusset plates are typically in satisfactory condition. Plates typically have small, isolated areas of laminar corrosion. Several gusset plates exhibit prying due to pack rust between the gusset and truss member. Upper gusset plates typically have surface rust at the interface with the upper floorbeam overhang and at the interface with the roadway floorbeam knee braces. Gusset plates at panel points U0 and U8 typically have laminar corrosion and pack rust over much of the plate. See Appendix C for a schedule of truss gusset plate deterioration.

Truss Bottom Chord Lateral Bracing gusset plates are typically corroded on the top face. There is paint rust, surface rust and some laminar corrosion on the plates. There is typically pack rust on the plate at interfaces with the lateral bracing and floorbeams. Steel around the edges of cut drain holes is typically rusted.

Truss Top Chord Lateral Bracing connection plates are generally in good condition. Connection plates exhibit light rusting. Pack rust with prying action was observed at the lateral bracing angle and connection plate interface.

Stringer bracing and top cross frame gusset plates at the railroad deck are typically rusted with some laminar corrosion on the top face. Bottom cross frame gusset plates have some surface rust on the top face.

Lateral bracing gusset plates on the railroad deck at Piers 17 and 18 are typically corroded and covered with debris. At Pier 17, the gusset plate at the south end of the East Railroad Stringer has a corrosion hole.

59.8 Bracing:

Roadway Approach Spans 1 to 15 and 21 to 27:

Lateral bracing is considered to be in good condition. Paint system failure with moderate rusting with some laminar corrosion was observed on several of the bracing members. The lateral bracing angle in Span 27, Bay 3 from FB2 to FB3 is bent.

Railroad Approach Spans 14, 15, 21, 22 and 23: Top lateral bracing typically have pack rust between the two angles with prying, and surface rust on the top face. Bottom lateral bracing typically have paint loss and surface rust throughout with laminar corrosion near the gusset plate connections. End cross frames typically have laminar corrosion throughout. Intermediate cross frames typically have surface rust on the top face of the top strut with isolated areas of surface rust throughout.

Truss Spans 1 to 5:

Truss Bottom Chord Lateral Bracing typically has surface rust on the top face, as well as pack rust at the interfaces with the lateral bracing gusset plates at the truss panel points and at the center of each bay. Truss lateral bracing also typically has pack rust between the two steel angles comprising each bracing member, causing a scalloping effect throughout the member.

Top chord lateral bracing members are in generally good condition. Members' exhibit paint system failure with light to moderate rusting.

Railroad deck stringer cross frames typically are rusted on the top face of the top strut. Other cross frame members exhibit some paint loss and surface rust. Top cross frame gusset plates have laminar corrosion on the top face.

Railroad deck stringer bracing typically are rusted on the top face and have pack rust between the two steel angles. Like the truss lateral bracing, this causes prying between the two members.

Lifting Girder Bracing at Truss Span 3:

The horizontal struts bracing the bottom chord at truss ends have laminar corrosion on horizontal surfaces. There is a lacing bar missing from the I-shaped southeastern strut. The steel angles connecting the box-shape struts to the end gusset plates are bent and distorted. There is a 4.5" long

crack in the steel angle connecting the top flange of the northwestern box-shape strut connection to the truss gusset plate. The same box-shaped strut has corrosion holes in the top lacing bars. The box-shaped struts have laminar corrosion at the guide rail.

59.9 Operator House Support Structure:

The Operator House Supports exhibit some laminar corrosion and pack rust at connections to the truss. The Operator House framing system exhibits some laminar corrosion on the support beams and stringers, as well as surface rust on top flanges. Purlins are in generally good condition. Portions of the Operator House have stay-in-place forms underneath the deck. These forms are rusted at the edges.

Item 59 – Overall Substructure – Serious Condition

62.1 Abutments:

The South Abutment and wingwalls exhibit significant concrete spalling with exposed reinforcement, delamination and map cracking, and are considered to be in poor condition. Approximately 200 to 300 square feet of delaminated and potential repair area was identified. Two large spalls with exposed reinforcement were observed on the abutment face. One spall was measured to be 4" deep. The wingwall concrete has spalled in several areas, primarily on the Southwest Wingwall.

Pier 13 has delamination and scaling between the steel bent columns. The bearing seat is spalled 4" to 8" deep. There is exposed rebar on the top face and there is a hairline crack at the western railroad bearing.

Pier 23 has two spalls on the backwall and one on the abutment stem. There is soil erosion at the southwest corner of the backwall. There are hairline cracks on the top and sides of the pier cap.

62.2 Piers:

Piers 1 through 12 are considered to be in poor to serious condition. The piers exhibit significant areas of concrete spalling, delamination and map cracking with areas of exposed reinforcement. Many piers have been repaired with concrete patches. The previous repairs exhibit significant concrete spalling, delamination and map cracking. Total estimated delaminated and potential repair areas for Piers 1 to 12 is approximately 6000 square feet. This area represents approximately 28% of the pier area above the footings, which is approximately 21,430 square feet.

Piers 1, 2 5, 6 and 7 have steel plate jackets to protect the concrete within the tidal fluctuation zone. These plates are heavily corroded and gapped at the corners allowing salt-laden water to infiltrate the pier columns. Pier 2 has voids approximately 5" deep, Pier 6 has voids over 12" deep, and Pier 7 has voids over 6" deep within the steel jacket limits. Pier 6 also has exposed reinforcement within the steel jackets.

Additional deficiencies observed are noted below:

- Pier 1 footing is exposed and exhibits map cracking. Two spalls were observed. One spall measured 12”x12”x2” deep. The second spall was shallow and measured 2”x18”.
- Pier 2 footing is exposed and exhibits map cracking.
- Pier 12 concrete cap has large width cracks emanating from the bearing anchor bolts.

Piers 14 through 22 have hairline cracks on the top and sides of the pier cap. Piers 14 through 17 have vegetation on portions of the pier that are below the high water elevation. Piers 15 and 16 have previously patched spalls.

- Pier 15 has a 6’ by 4’ spall up to 6” in depth on the southwestern corner of the pier, as well as corrosion up to 6” deep with exposed reinforcement on the top face. The eastern corner of the pier cap is spalled with exposed rebar. There is a crack with efflorescence on the full height of the cap on the west face. The north face has a patched spall.
- Pier 16 has two spalls on the east face. On the north face, two areas where spalls were previously patched are cracking with efflorescence. On the east face, there are two small spalls on the east.
- Pier 17 has hairline cracks on the bearing pedestals and erosion on the west face. There is a 2” by 6” spall with a depth up to 1” on the west side of the south face and two spalls on the east side, the larger being 6“ by 3’. The concrete at the southwest corner is beginning to spall. The concrete is cracked and visibly lifting away from the pier.
- Pier 18 has several narrow and medium cracks with efflorescence, including at the northeast corner, adjacent to the tower base. There is a small spall on the south face and two on the west face. The largest measures 6” by 6” and up to 3” in depth. There is erosion on the west face pier cap.
- Pier 19 has a small spall on the east face and on the south face. Efflorescence is emanating from the hairline cracks in the pier cap.
- Pier 20 has erosion on the south and east faces.
- Pier 21 has a shallow 2” by 18” spall on the south face, as well as two circular patches below the west bearing. These circular patches may be repairs for conic pop-outs on the pier cap.
- Pier 23 has two spalls on the backwall and one on the abutment stem. There is erosion on the southwest corner of the backwall.

Steel Pier Bents at Piers 13, 14 and 21-26:

The steel bent substructures are comprised of built-up and W-shape columns, W-shape lateral bracing and built-up riveted cross beams. The bents exhibit varying degrees of rusting, laminar corrosion and section loss. The following deficiencies were noted:

- Pier Bent 13 has pack rust with prying action at multiple lateral bracing angle and connection plate interfaces. Base plate heavy rusting with pitting and laminar corrosion was observed. Base plate anchor bolt nuts exhibit laminar corrosion with section loss. The cross beam exhibits heavy rusting with laminar corrosion. Rivet head section loss was observed at cross beam to column connections.
- Pier Bent 14 columns exhibit moderate to heavy rusting with laminar corrosion. Rivet head section loss was observed at cross beam to column connections. The east cross beam cantilever tension tie plate has 100% section loss with a knife edge. The deterioration extends to the cantilever flange angle.
- Pier Bent 21 columns exhibit moderate to heavy rusting in areas of paint system failure on the exterior surface. The cross beam bottom flange angles exhibit pitting and section loss.

One knee bracing web plate has a 1" x 1" hole. Heavy rusting with laminar corrosion was observed on the interior of both columns. The west vertical column plate has a 6" x 1½" hole.

- Pier Bent 22 columns exhibit light rusting in areas of paint system failure on the exterior surface. Pack rusting between anchor bolts and stiffener plates was observed. One stiffener plate is bent. Heavy rusting with laminar corrosion was observed on the interior of the both columns. The westerly column interior vertical plate has a 9½" x 1½" hole.
- Pier Bent 23 columns exhibit paint system failure with light to moderate rusting. W-shaped lateral bracing members have some section loss. Lateral bracing connection plates have pack rust with prying. Both bottom lateral bracing plates exhibit moderate to heavy rusting with laminar corrosion along with up to 100% rivet head section loss. One lower diagonal lateral brace has approximately 50% section loss over the end 7" of the flange. Base plate anchor bolts exhibit up to 60% section loss and pack rusting between anchor bolts and stiffener plates was observed. The cross beam top and bottom flange angles exhibit moderate rusting.
- Pier Bent 24 columns exhibit paint system failure with light to moderate rusting. Flange and web pitting was observed approximately 4 feet from the bottom of the easterly column. The lower horizontal strut member web and flange exhibit light pitting. Column base plates exhibit rusting with some laminar corrosion and pitting. Pack rusting between anchor bolts and stiffener plates and base plate rivet head loss was also observed. Bottom lateral bracing connection plates exhibit pack rust with prying. The concrete pedestals exhibit cracking with rust staining.
- Pier Bent 25 columns exhibit paint system failure with light to moderate rusting. Column base plates exhibit rusting with some laminar corrosion and pitting. Pack rust between the east column and base plate members was also observed. Pack rust with prying action was observed at the lateral bracing angle and connection plate interface. The cross beam top and bottom flange angles exhibit moderate rusting with laminar corrosion and section loss. Rivet head losses of up to 50% were observed at cross beam to column connections and at various locations along the cross beam bottom flange angles. The west cross beam cantilever tension tie plate has up to 40% rivet head loss. The concrete pedestal exhibits cracking, delamination and spalling with exposed reinforcement.
- Pier Bent 26 columns exhibit paint system failure with light to moderate rusting. Lateral bracing members also exhibit moderate to heavy rusting with laminar corrosion. Base plate anchor bolts exhibit up to 50% section loss. The east lower lateral bracing connection plate exhibits moderate pitting with rivet head loss. Light rusting of the cross beam top flange was observed. Rivet head losses were observed at various locations along the cross beam flange angles.

Refer to Appendix C for detailed steel bent condition sketches.

FRACTURE CRITICAL INSPECTION

IDENTIFICATION OF FRACTURE CRITICAL MEMBERS

Type of FCM:	Quantity:
Steel Riveted Built-Up Deck Girder – Roadway Approach	44
Steel Riveted Built-Up Deck Girder – Railroad Approach	12
Steel Riveted Built-Up Floorbeams – Roadway Approach Spans	85
Steel Riveted Built-Up Floorbeams – Truss Spans	45
Steel Riveted Built-Up Cross Beams – Steel Bents	8
Steel Riveted Truss Bottom Chords	40
Steel Riveted Truss Top Chords	2
Steel Riveted Truss Diagonals	20
Steel Riveted Truss Verticals	30

IDENTIFICATION OF FRACTURE CRITICAL MEMBERS – ROADWAY APPROACH SPANS 1-13

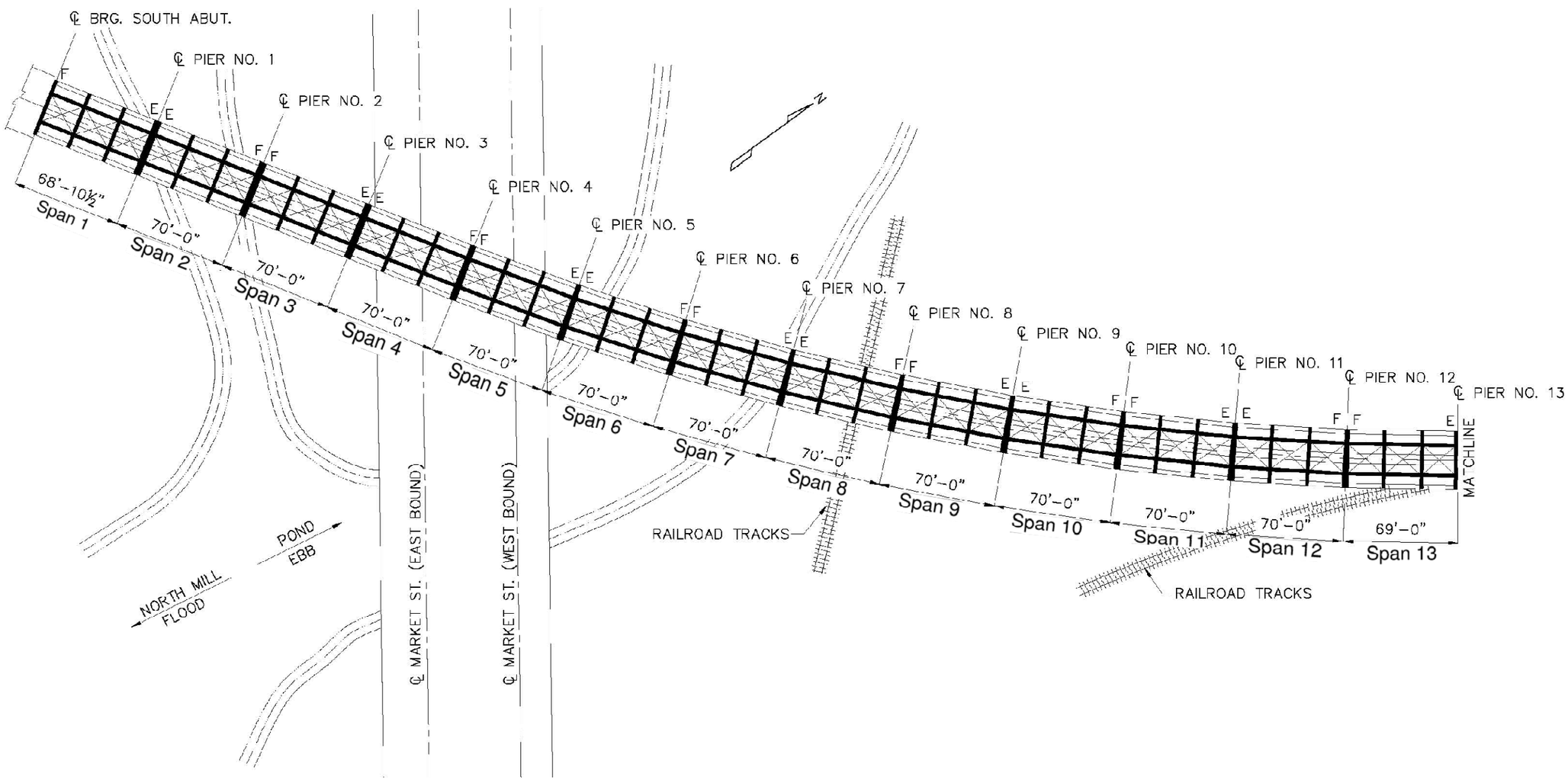

LEGEND:

E – EXPANSION JOINT
F – FIXED JOINT
▬ Fracture Critical Member

IDENTIFICATION OF FRACTURE CRITICAL MEMBERS – ROADWAY APPROACH SPANS 14, 15 AND 21-27

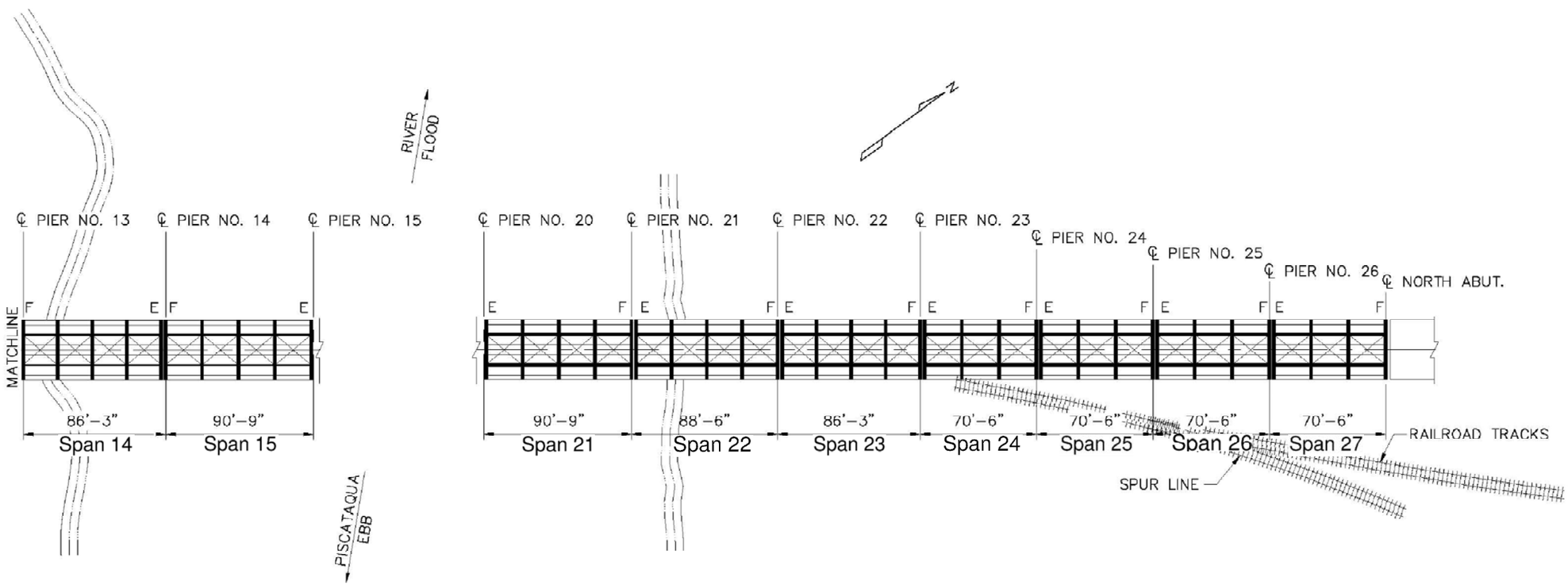

LEGEND:

E – EXPANSION JOINT
F – FIXED JOINT
▬ Fracture Critical Member

IDENTIFICATION OF FRACTURE CRITICAL MEMBERS – TRUSS ELEVATION

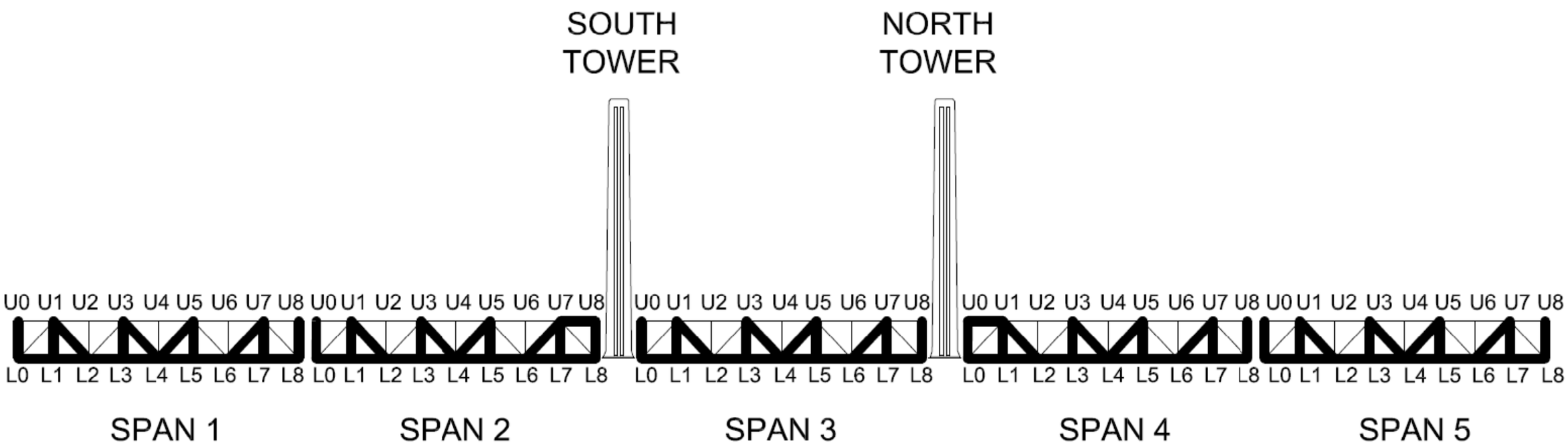

Fracture Critical Member

IDENTIFICATION OF FRACTURE CRITICAL MEMBERS – TRUSS FLOOR SYSTEM

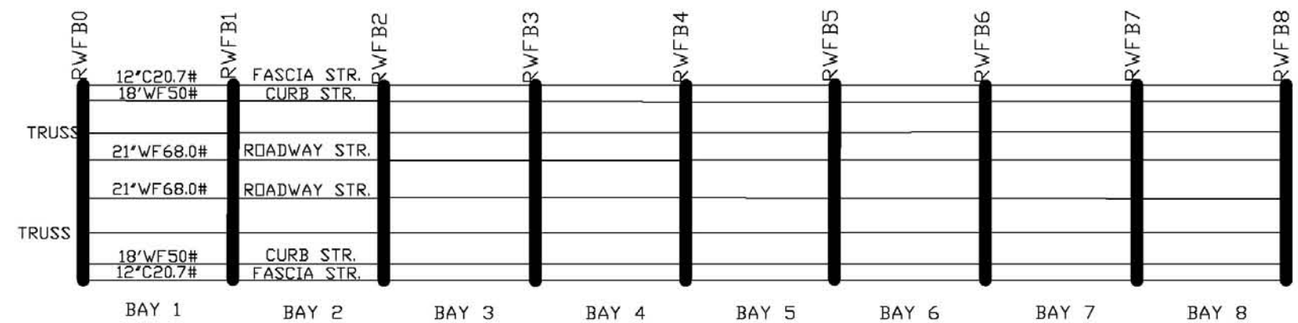

TOP DECK FLOOR SYSTEM

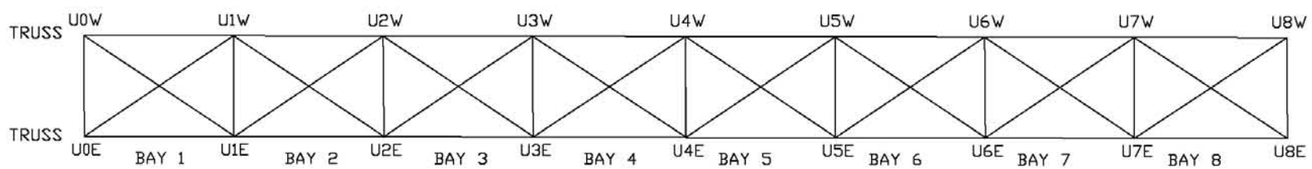

TOP LATERAL BRACING SYSTEM

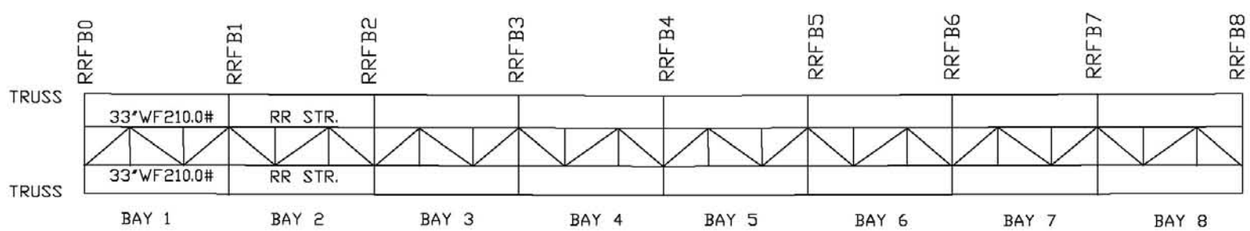

BOTTOM DECK FLOOR SYSTEM

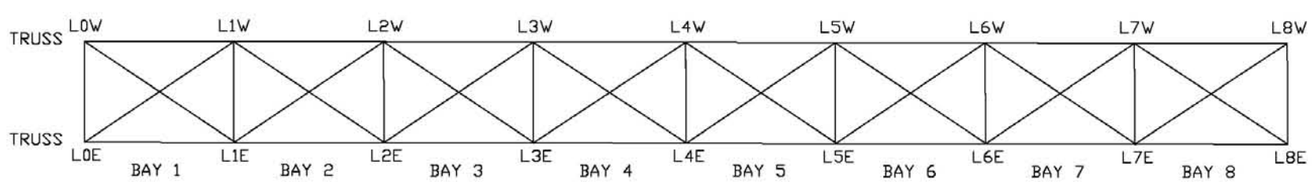

BOTTOM LATERAL BRACING SYSTEM

— Fracture Critical Member

FRACTURE CRITICAL INSPECTION PROCEDURES

Steel Riveted Built-Up Floorbeams and Cross Girders:

1. Check all rivets and bolts to determine that they are tight and that the individual components are operating as one. Check for cracked or missing bolts, rivets and rivet heads

   Findings: Although rivet heads have section losses in some locations, all individual components are operating as one.

2. Check the member for misplaced holes or repaired holes that have been filled with weld metal. These are possible sources of fatigue cracking.

   Findings: On the lower floor system of the truss spans, there are drilled holes in the top flanges of floorbeams at midspan. No cracks were observed propagating from these holes.

3. Check the area around the floorbeam and lateral bracing connections for cracking in the web due to out-of-plane bending.

   Findings: No cracks were found in the webs due to out-of-plane bending.

4. Check the entire length of the tension flanges and web for cracking, which may have originated from corrosion, pitting, section loss, or defects in fabrication (e.g., nicks and gouges in the steel).

   Findings: There is some isolated corrosion, pitting and section loss on the floorbeam webs and tension flanges. No cracks propagating from corrosion were found.

5. Check the entire length of temporary erection welds, tack welds, welded connections not shown on the design drawings or other miscellaneous welds used in either construction or repair as these are possible sources of cracks.

   Findings: Welds were found on the Floorbeam Overhangs at the tie plates. No cracks propagating from welds were found.

Steel Riveted Truss and Tower Members:

1. Check each component to see that the loads are being evenly distributed between them by attempting to vibrate the member by hand, and that batten plates and lacing are tight.

   Findings: Although rivet heads have section losses in some locations, all individual components are operating as one.

2. Check carefully along the first row of rivets for cracking as the first row carries more load than succeeding rows. The first row is the row closest to the edge of the gusset plate and perpendicular to the axis of the member.

   Findings: No cracks were observed.

3. Check for nicks, gouges and tears due to the impact from passing vehicular or marine traffic. This type of damage can initiate future cracks.

   Findings: No nicks, gouges and tears were observed.

4. Observe carefully any tack welding used either in construction or repair as this is a potential source of cracks. Any tack welds should be flagged to the attention of the bridge engineer in the report for future observation and consideration in stress rating.

   Findings: There are several locations with welded connections, primarily utility connections to the bottom chord. No cracks were observed at repair welds.

5. If any misplaced holes or holes used for reconstruction have been plug welded, check carefully for fatigue cracks.

   Findings: There are numerous holes drilled for utility connections. These holes were covered by repair plates or by washers and bolts. No cracks were observed outside of the area covered by washers at the hole locations.

IDENTIFICATION OF FATIGUE SENSITIVE DETAILS (FSD)

FSD 14 - Base metal at details connected with transversely loaded welds, with the welds perpendicular to the direction of stress:

Vertical welds on truss bottom chords where electric conduit supports are welded.

FSD 17 - Base metal adjacent to details attached by longitudinally loaded fillet welds:

Horizontal welds on truss bottom chords where electric conduit supports are welded. Welds connecting the tie plate to the top flange of the Floorbeam Overhangs.

FSD 21 - Base metal at net section of riveted connections:

All fracture critical members.

Quantity of FSD Types: 3

IDENTIFICATION OF FATIGUE SENSITIVE DETAILS (FSD)

General Condition	Situation	Detail Category	Illustrative Example; See Figure 6.6.1.2.3-1
Plain Members	Base metal:		1, 2
	• With rolled or cleaned surfaces; flame-cut edges with *AASHTO/AWS D1.5M/D1.5* (Section 3.2.2) smoothness of 1,000 μ-in. or less	A	
	• Of unpainted weathering steel, all grades, designed and detailed in accordance with FHWA (*1989*)	B	
	• At net section of eyebar heads and pin plates	E	
Builtup Members	Base metal and weld metal in components, without attachments, connected by:		3, 4, 5, 7
	• Continuous full-penetration groove welds with backing bars removed, or	B	
	• Continuous fillet welds parallel to the direction of applied stress	B	
	• Continuous full-penetration groove welds with backing bars in place, or	B′	
	• Continuous partial-penetration groove welds parallel to the direction of applied stress	B′	
	Base metal at ends of partial-length cover plates:		
	• With bolted slip-critical end connections	B	22
	• Narrower than the flange, with or without end welds, or wider than the flange with end welds ○ flange thickness ≤0.8 in. ○ flange thickness >0.8 in.	 E E′	7
	• Wider than the flange without end welds	E′	
Groove-Welded Splice Connections with Weld Soundness Established by NDT and All Required Grinding in the Direction of the Applied Stresses	Base metal and weld metal at full-penetration groove-welded splices:		
	• Of plates of similar cross-sections with welds ground flush	B	8, 10
	• With 2.0 ft. radius transitions in width with welds ground flush	B	13
	• With transitions in width or thickness with welds ground to provide slopes no steeper than 1.0 to 2.5 ○ grades 100/100W base metal ○ other base metal grades	 B′ B	11, 12
	• With or without transitions having slopes no greater than 1.0 to 2.5 when weld reinforcement is not removed	C	8, 10, 11, 12

From AASHTO LRFD Bridge Specifications, 4th Edition, Table 6.1.2.3-1

IDENTIFICATION OF FATIGUE SENSITIVE DETAILS (FSD)

General Condition	Situation	Detail Category	Illustrative Example; See Figure 6.6.1.2.3-1
Longitudinally Loaded Groove-Welded Attachments	Base metal at details attached by full- or partial-penetration groove welds:		
	• When the detail length in the direction of applied stress is:		
	○ less than 2.0 in.	C	6, 15
	○ between 2.0 in. and 12 times the detail thickness, but less than 4.0 in.	D	15
	○ greater than either 12 times the detail thickness or 4.0 in.		
	—detail thickness <1.0 in.	E	15
	—detail thickness ≥1.0 in.	E′	15
	• With a transition radius with the end welds ground smooth, regardless of detail length:		16
	○ transition radius ≥24.0 in.	B	
	○ 24.0 in. > transition radius ≥ 6.0 in.	C	
	○ 6.0 in. > transition radius ≥ 2.0 in.	D	
	○ transition radius <2.0 in.	E	
	• With a transition radius with end welds not ground smooth	E	16
Transversely Loaded Groove-Welded Attachments with Weld Soundness Established by NDT and All Required grinding Transverse to the Direction of Stress	Base metal at detail attached by full-penetration groove welds with a transition radius:		16
	• With equal plate thickness and weld reinforcement removed:		
	○ transition radius ≥24.0 in.	B	
	○ 24.0 in. > transition radius ≥ 6.0 in.	C	
	○ 6.0 in. > transition radius ≥ 2.0 in.	D	
	○ transition radius <2.0 in.	E	
	• With equal plate thickness and weld reinforcement not removed:		
	○ transition radius ≥6.0 in.	C	
	○ 6.0 in. > transition radius ≥ 2.0 in.	D	
	○ transition radius <2.0 in.	E	
	• With unequal plate thickness and weld reinforcement removed:		
	○ transition radius ≥2.0 in.	D	
	○ transition radius <2.0 in.	E	
	• For any transition radius with unequal plate thickness and weld reinforcement not removed	E	
Fillet-Welded Connections with Welds Normal to the Direction of Stress	Base metal:		
	• At details other than transverse stiffener-to-flange or transverse stiffener-to-web connections	Lesser of C or Eq. 6.6.1.2.5-3	14
	• At the toe of transverse stiffener-to-flange and transverse stiffener-to-web welds	C′	6
Fillet-Welded Connections with Welds Normal and/or Parallel to the Direction of Stress	Shear stress on the weld throat Base metal at end of weld	E	9

From AASHTO LRFD Bridge Specifications, 4th Edition, Table 6.1.2.3-1

IDENTIFICATION OF FATIGUE SENSITIVE DETAILS (FSD)

General Condition	Situation	Detail Category	Illustrative Example; See Figure 6.6.1.2.3-1
Longitudinally Loaded Fillet-Welded Attachments	Base metal at details attached by fillet welds:		
	• When the detail length in the direction of applied stress is:		
	○ less than 2.0 in. or stud-type shear connectors	C	15, 17, 18, 20
	○ between 2.0 in. and 12 times the detail thickness, but less than 4.0 in.	D	15, 17
	○ greater than either 12 times the detail thickness or 4.0 in.		7, 9, 15, 17
	—detail thickness <1.0 in.	E	
	—detail thickness ≥1.0 in.	E′	
	• With a transition radius with the end welds ground smooth, regardless of detail length		16
	○ transition radius ≥2.0 in.	D	
	○ transition radius <2.0 in.	E	
	• With a transition radius with end welds not ground smooth	E	16
Transversely Loaded Fillet-Welded Attachments with Welds Parallel to the Direction of Primary Stress	Base metal at details attached by fillet welds:		16
	• With a transition radius with end welds ground smooth:		
	○ transition radius ≥2.0 in.	D	
	○ transition radius <2.0 in.	E	
	• With any transition radius with end welds not ground smooth	E	
Mechanically Fastened Connections	Base metal:		21
	• At gross section of high-strength bolted slip-critical connections, except axially loaded joints in which out-of-plane bending is induced in connected materials	B	
	• At net section of high-strength bolted nonslip-critical connections	B	
	• At net section of riveted connections	D	
Eyebar or Pin Plates	Base metal at the net section of eyebar head, or pin plate	E	23, 24
	Base metal in the shank of eyebars, or through the gross section of pin plates with:		
	• Rolled or smoothly ground surfaces	A	23, 24
	• Flame-cut edges	B	23, 24

From AASHTO LRFD Bridge Specifications, 4th Edition, Table 6.1.2.3-1

IDENTIFICATION OF FATIGUE SENSITIVE DETAILS (FSD)

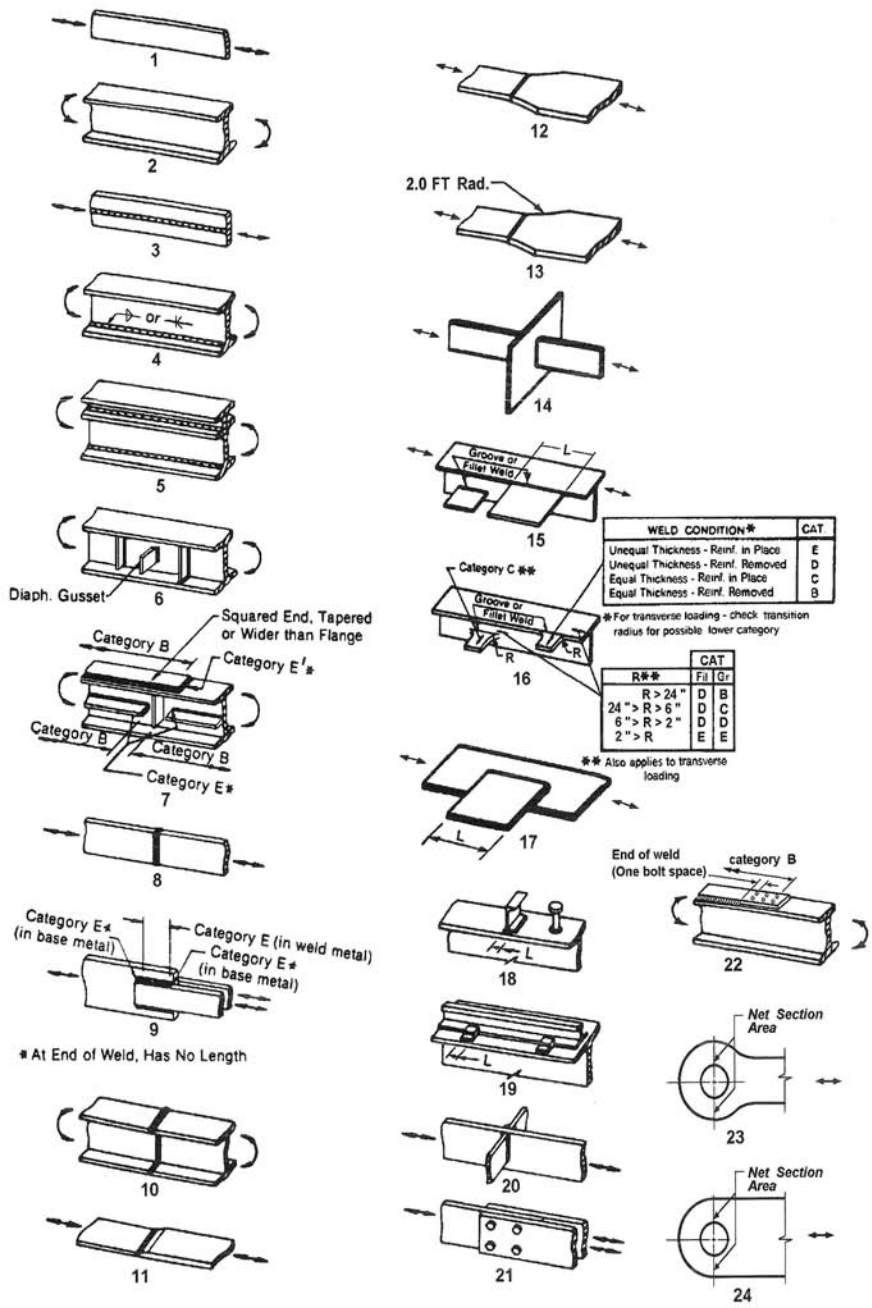

WELD CONDITION*	CAT.
Unequal Thickness - Reinf. in Place	E
Unequal Thickness - Reinf. Removed	D
Equal Thickness - Reinf. in Place	C
Equal Thickness - Reinf. Removed	B

* For transverse loading - check transition radius for possible lower category

R**	CAT Fil	CAT Gr
R > 24"	D	B
24" > R > 6"	D	C
6" > R > 2"	D	D
2" > R	E	E

** Also applies to transverse loading

Figure 6.6.1.2.3-1 Illustrative Examples.

From AASHTO LRFD Bridge Specifications, 4th Edition, Table 6.1.2.3-1

APPENDICES

Appendix A: Inspection Forms

Appendix B: Photos

Section I: Superstructure and Deck - Roadway Approach Spans

Section II: Superstructure, Deck and Towers - Truss Spans

Section III: Superstructure and Deck - Railroad Approach Spans

Section IV: Bearings

Section V: Substructure

Section VI: Wearing Surfaces and Bridge Railing

Appendix C: Condition Summary Tables and Sketches

Part I – Truss Spans

- Section A: Truss Member Condition
- Section B: Gusset Plate Condition
- Section C: Typical Stringer Condition
- Section D: Typical Floorbeam Condition

Part II – Approach Spans

- Section A: Girder Condition
- Section B: Floorbeam Condition
- Section C: Stringer Condition
- Section D: Pier Bents 21-26 Condition